AGENCY FOR INTERNATIONAL DEVELOPMENT
WASHINGTON, D. C. 20523

BIBLIOGRAPHIC INPUT SHEET

FOR AID USE ONLY

1. SUBJECT CLASSIFICATION

A. PRIMARY: Food production and nutrition AN10-0000-G732

B. SECONDARY: Agricultural engineering and structures--Philippines

2. TITLE AND SUBTITLE

The technical and economic characteristics of rice postproduction systems in the Bicol River Basin

3. AUTHOR(S)

(101) IRRI; Philippines Univ. Dept.of Agricultural Process Engineering and Technology

4. DOCUMENT DATE	5. NUMBER OF PAGES	6. ARC NUMBER
1978	230p.	ARC RP633.18.I61c

7. REFERENCE ORGANIZATION NAME AND ADDRESS

IRRI

8. SUPPLEMENTARY NOTES *(Sponsoring Organization, Publishers, Availability)*

9. ABSTRACT

10. CONTROL NUMBER

PN-AAG-561

11. PRICE OF DOCUMENT

12. DESCRIPTORS

Grain loss
Rice
Post harvest
Agricultural machinery
Milling
Technological change
Bicol River, Philippines
River basins
Philippines

13. PROJECT NUMBER

492030300

14. CONTRACT NUMBER

AID-492-871-T

15. TYPE OF DOCUMENT

AID 590-1 (4-74)

The technical and economic characteristics of rice postproduction systems in the bicol river basin

A REPORT

Submitted by:

Process Engineering Department
Institute of Agricultural Engineering
and Technology
University of the Philippines at Los Baños

Agricultural Engineering Department
The International Rice Research
Institute
Los Baños, Philippines

Bicol River
Basin
Development
Program

April 1978

REVISED NOV. 1978

REVISED NOV. 1978

THE TECHNICAL AND ECONOMIC CHARACTERISTICS OF RICE POSTPRODUCTION SYSTEMS IN THE BICOL RIVER BASIN

Submitted by:

Process Engineering Department
Institute of Agricultural Engineering
and Technology
University of the Philippines at Los Baños

Agricultural Engineering Department
The International Rice Research
Institute
Los Baños, Philippines

To the

Bicol River Basin
Development Program

April 1978

Correct citation: International Rice Research Institute. 1978. A report on Rice-Postproduction Technology Project submitted by the International Rice Research Institute and the University of the Philippines at Los Baños to the Bicol River Basin Development Program. Los Baños, Philippines.

The project fund was from a USAID grant under the Bicol Project Agreement No. 75-09, Sub-Agreement No. 15, dated June 30, 1975. The project was implemented under the Bicol River Basin Development Program Office Memorandum of Agreement with the International Rice Research Institute/University of the Philippines at Los Baños.

The International Rice Research Institute receives support from a number of donors including the Ford Foundation, The Rockefeller Foundation, the European Economic Community, the United Nations Development Programme, the United Nations Environment Programme, the Asian Development Bank, the International Development Research Centre, the World Bank, and the international aid agencies of the following governments: USA, Canada, Japan, the United Kingdom, the Netherlands, Australia, the Federal Republic of Germany, Iran, Saudi Arabia, New Zealand, Belgium, Denmark, and Sweden.

April 1978
Revised edition, November 1978

Table of Contents

	Page no.
Foreword	-
Acknowledgments	-
List of Figures	-
List of Tables	-
Introduction	1
Farm Level Survey and Field Trials	11
Field Survey	11
Postharvest practices	13
Production and disposal of paddy	25
Field Trials	29
Postproduction operations and labor requirements	29
Quantitative grain losses	44
Qualitative grain losses	47
Economic analysis	47
Farm Survey Summary	72
Field Trial Summary	73
Mill Level Survey Trials - Technical and Economic Efficiency	73
Technical Assessment	74
Milling Paddy from Alternative Farm Level Systems	87
Monitoring Activities	90
Mill Level Survey Operations	109
Economic Analysis	129
Economics of Improving the Steel Huller	143
Summary of Findings	145

FOREWORD

During the past decade there have been repeated attempts to foster interest in problems associated with postproduction systems for foodgrains in the developing nations. A few studies have been prophetic in accurately portraying the issues that have accompanied significant increases in foodgrain output (c.f. Falcon, 1972).[1/] Many have focused on the problems of grain losses and the potential embodied in reducing these to increase grain output and grain quality. Grain loss is a contemporary item in the work plans of the Food and Agriculture Organization, the World Food Council and several major donor agencies. There exists a general assumption supported by these groups that 1) losses are unnecessarily high, 2) the prescription is the introduction of improved management and technology and 3) farmers and processors cannot or will not take action to eliminate those losses without external assistance. The lack of any notable success in reducing losses (or evidence of reductions) in most countries is generally ascribed to a lack of information and suitable research methodologies with which to describe the nature, magnitude, location and causes of losses in traditional postproduction systems.

It was against this background that the planning staff of the Bicol River Basin Development Program became interested in examining the sequence of operations that constitute farm and processing postproduction systems in the Bicol region. Interest was also stimulated by concern with possible future problems that could arise as development of irrigation systems expanded output from double and triple cropping and use of the improved varieties with other modern inputs increased yields.

Examination of the postproduction industry is not simple. One dimension of the problems is the high degree of technical interdependency that exists among the many components that make up these systems at the farm and rice mill. The manner and efficiency with which operations are carried out in farmer's field will have a significant effect on the quantity and quality of rice that reaches the consumer's table.[2/] In addition to the problem of evaluating the nature of these technical interdependencies,

---

1/ The attached list of references contains a number of recent articles outlining the wide range of grain loss and marketing issues. Falcon's earlier article addresses the broader questions of how the marketing sector may pose a constraint to the realization of increased production in circumstances where output is increasing rapidly.

2/ The development of an integrated approach that takes cognizance of interactions is often referred to as the "systems" approach (Hulse, 1977). While useful, this method places heavy requirements on the development of data that portray these interactions. With such information available, it is possible to expand the analysis through simulation and modelling to combinations of component technology not included in the original empirical study.

there also exists the difficulty of examining the interaction of technology with the set economic incentives faced by farmers and processors. These incentives take the form of consumer preferences for alternative types of milled rice or the degree to which standards and grades are reflected in price differentials for both paddy and milled rice. How effectively is a price premium given for a package of milled rice in the supermarket translated into an economic incentive for a farmer to clean and dry his paddy before delivery to the processor or buyer? Another difficulty that must be confronted is the mechanism for making modern technologies available to small farmers, particularly when these technologies often embody lumpy capital requirements and/or substantial risks such as drying equipment.

The present study focuses largely on an examination of the technical aspects of postproduction operations including the interdependencies that exist between components of each system. There has also been an attempt to examine the economic and institutional factors that condition the selection of a particular patterns of technology. While many questions remain unanswered, the insights suggested by the study will hopefully prove useful in formulating guidelines governing planning and development of improved postproduction programs in the Bicol Region.

ACKNOWLEDGMENTS

The Bicol River Basin Rice Postproduction project is a joint effort of the Department of Agricultural Process Engineering and Technology at the University of the Philippines in Los Baños, the Department of Agricultural Engineering at the International Rice Research Institute and the Bicol River Basin Development Program. Funding for the project was provided under a special grant from the United States Agency for International Development to the Bicol River Basin Development Program.

During the more than one year of field research, many persons have been associated with the project. We are grateful for the assistance provided by Prof. Wesley W. Gunkel of Cornell University in the initial implementation of project activities in the Bicol area. Ms. Zenaida Toquero formerly Senior Research Assistant at IRRI, was instrumental in conceptualization of the research design, selection of the project sites and development of the field interviewing and evaluation format. Many persons were active in the collection and preliminary analysis of data. The following were assigned to the field staff of the project:

1. Ms. Gloria Fajardo
2. Ms. Gloria Oraa
3. Ms. Nene Napoles
4. Ms. Gloria Soltes
5. Mr. Jesus Cledera
6. Ms. Bernadette Florendo
7. Ms. Salve Ochoa
8. Ms. Imelda Barredo
9. Mr. Oscar Molina
10. Mr. Miguel Fabellar

Mr. Carl Villacorta of the BRBDP handled liaison activities between UPLB, IRRI, and the Bicol River Basin Planning Program Staff in an efficient and highly diplomatic manner. We are also grateful for the continuing interest and assistance provided by Atty. Salvador Pejo, Director of the Bicol River Basin Development Program, Ben Gaon and others on the BRBDP staff. Mr. Donald Wadley of USAID provided support throughout the duration of the study. Messrs. Douglas Tinsler and Frank Sheppard of USAID gave considerable encouragement to the project at its outset.

Much assistance was received in the processing and statistical analysis of data from Ms. Leonarda Ebron, Mr. Morfeo Sumiran, Misses Catalina Pua and Elisa Banquilis and Mr. Ramon Echevarria of the IRRI Agricultural Engineering Department. Misses Ella Castro and Lydia Bañez typed the manuscript and Rudy Angco provided the graphics, all under difficult conditions.

The Technical Services Directorate and Regional staff of the National Grains Authority were extremely generous in providing use of laboratory facilities and technical support in the processing of the several thousand samples collected during the course of the study.

Without the help, patience and assistance of many farmers, rice mill owners and operators, barrio officers and representatives, data collection for the project would have been impossible.

We are most indebted to Messrs. Iñigo Camacho and Pablo Hidalgo for their dedication to the task of gathering and evaluation of data in rice mills throughout the area and to Ms. Celerina Maranan who, as overall project leader, was responsible for daily management of the study in addition to the collection and analysis of data from field level trials and surveys.

Bart Duff and Ernesto Lozada
Joint Project Coordinators,
IRRI and UPLB, Los Baños

April 11, 1978

List of Figures

		Page no.
Figure 1.	Area, yields, and total production of rice, by degree of irrigation, in the Bicol Region, 1960 to 1978.	2
Figure 2.	Areas included in the farm and mill level survey, Bicol River Basin, 1976-77.	5
Figure 3.	Alternative farm level postproduction systems.	6
Figure 4.	Measurement of plot size and taking crop cut samples in the Bicol Region, 1976-77.	8
Figure 5.	Recording plot data for crop cut samples and measuring moisture content prior to drying samples.	9
Figure 6.	Assessing harvest and preharvest field losses and weighing output from field trials.	10
Figure 7.	Methods of threshing employed by 137 farmers in three villages of the Bicol Region, 1976-77.	16
Figure 8.	Threshing with Bicol-type machine and using a hand flail.	17
Figure 9.	Production and disposal of paddy by 137 farmers in three villages of the Bicol Region, 1976-77.	27
Figure 10.	Effect of total production, operator's share, and effective rice area on marketable surplus.	28
Figure 11.	Areas included in the farm level field trials, Bicol River Basin area, 1976-77.	30
Figure 12.	Comparative labor requirements per ton and per hectare by operation in alternate postproduction systems, Bicol River Basin area, 1976-77.	33
Figure 13.	Relationship between labor inputs and yields by operation.	34

Page no.

Figure 14.	Hand sickle for manual harvesting and field bundling prior to threshing.	36
Figure 15.	Field handling of unthreshed paddy.	37
Figure 16.	Movement and use of axial flow thresher.	56
Figure 17.	Mobility problems with axial flow thresher during wet season and use of portable axial flow thresher.	57
Figure 18.	Average total costs for axial flow and portable threshers.	59
Figure 19.	Twin bed and vertical batch type drying systems.	61
Figure 20.	Average total cost to achieve a 12% moisture reduction with three alternative drying systems.	62
Figure 21.	Location of nine alternative milling technologies included in the technical assessment and monitoring activities, Bicol River Basin area, 1976-77.	70
Figure 22.	The rubber roll huller-engelberg type steel roll whitener rice mill combination.	78
Figure 23.	Actual utilization pattern of steel huller mills included in the monitoring schedule, Bicol River Basin area, 1976-77.	85
Figure 24.	Actual utilization pattern of mills included in the monitoring schedule, Bicol River Basin area, 1976-77.	87
Figure 25.	Actual utilization pattern of cone type mills included in the monitoring schedule, Bicol River Basin area, 1976-77.	88
Figure 26.	Results of paddy analysis, 150 samples collected from 11 rice mills, Bicol River Basin area, 1976-77.	91

Page no.

Figure 27. Effect of percent moisture content and cracked kernel on head rice yield, 150 paddy samples, Bicol River Basin area, 1976-77. 92

Figure 28. Effect of paddy purity, damaged and immature kernels on total milling yield, 150 paddy samples, Bicol River Basin area, 1976-77. 93

Figure 29. Grade distribution of milled rice samples by milling system, Bicol River Basin area, 1976-77. 96

Figure 30. Distribution of rice mills by number and rated capacity, Bicol River Basin area, 1976-77. 104

Figure 31. Seasonal utilization patterns of cone type rice mills, Bicol River Basin area, 1976-77. 112

Figure 32. Seasonal utilization pattern for steel huller mills, Bicol River Basin area, 1976-77. 114

Figure 33a. Average total cost and revenue for alternative milling systems, Bicol River Basin area, 1976-77. 130

Figure 33b. Average total cost and revenue for alternative milling systems, Bicol River Basin area, 1976-77. 131

Figure 34. Relationship between rubber roll huller investment cost and profit per ton at different rates of utilization, 1978. 139

Appendix figures:

C1 Schematic layout of Concina rice mill. C2

C2 Schematic layout of Gonzales rice mill. C3

C3 Schematic layout of Libmanan rice mill. C4

C4 Schematic layout of Nazarrea rice mill. C5

		Page no.
C5	The stone disc huller.	C6
C6	Husk aspirator with suction blower.	C7
C7	Air trap husk aspirator.	C8
C8	Compartment type paddy separator.	C9
C9	Whitening cone.	C10
C10	Schematic layout of a Japanese multi-pass rice mill with rubber roll and abrasive/friction whitener, 5 tons/h plant.	C12
C11	Rubber roll huller with husk aspirator.	C13
C12	The tray type paddy separator.	C14
C13	Abrasive whitener (RM).	C15
C14	The friction whitening machine (BS).	C16
C15	Rice polishing machine.	C18
C16	The rice grading machine.	C19
C17	The schematic layout of the Engelberg type steel roll single pass rice mill unit.	C20
C18	The Engelberg type steel roll single pass rice mill unit.	C21
C19	The Kyowa-Yanmar village type rubber roll huller-friction whitener rice mill combination.	C22
C20	The Sanriku village type centrifugal huller/friction whitener combination.	C24
C21	Schematic drawing of the IRRI experimental steel roll single pass rice mill unit.	C25
C22	The IRRI experimental steel roll single pass rice mill unit.	C26
C23	Schematic layout of rubber roll/engelberg type steel roll whitener rice mill combination.	C28

		Page no.
C24	The rubber roll/engelberg type steel roll whitener rice mill combination.	C29
C25	Schematic layout of stone disc huller/engelberg type steel roll whitener rice mill combination.	C30
C26	Stone disc huller/engelberg type steel roll whitener rice mill combination.	C31
C27	Schematic layout of an engelberg type steel roll rice mill combination.	C33
C28	The engelberg type steel roll rice mill combination.	C34
C29	Rough rice analysis by weight (milling potential).	C35
C30	Sieves with round perforations.	C36
C31	The laboratory aspirator.	C37
C32	The moisture meter.	C38
C33	The magnifying glass with light.	C39
C34	The laboratory testing husker.	C40
C35	The automatic laboratory whitening machine	C42
C36	The laboratory indented tray rice grader.	C43
C37	Brown rice (from commercial mill) analysis.	C45
C38	Milled rice (from commercial mill) analysis.	C45

List of Tables

		Page no.
Table 1.	Basic information on the 137 farmers interviewed, Bicol River Basin area, 1976-77.	12
Table 2.	Harvesting practices, 137 farmers, Bicol River Basin area, 1976-77.	14
Table 3.	Problems in harvesting encountered by 137 farmers in the Bicol River Basin area, 1976-77.	15
Table 4.	Drying practices of 137 farmers in the Bicol River Basin, 1976-77.	19
Table 5.	Storage practices of 137 farmers in the Bicol River Basin area, 1976-77.	20
Table 6.	Reasons for storing/not storing paddy at the mill, 137 farmers in the Bicol River Basin area, 1976-77.	21
Table 7.	Trading practices, 137 farmers at the Bicol River Basin area, 1976-77.	22
Table 8.	Production and disposal of paddy by 137 rice farmers in the Bicol River Basin area, 1976-77.	26
Table 9.	General characteristics of the three villages included in the postproduction pilot trials, Bicol River Basin area, 1976-77.	31
Table 10a.	Comparative labor requirements per ton and per hectare by operation in alternate post-production systems, Bicol River Basin area, 1976-77.	32
Table 10b.	Labor requirement per hectare in alternative postproduction systems by operation in three pilot areas, Bicol River Basin area, 1976-77.	39
Table 10c.	Labor requirements per ton in alternative postproduction systems in 3 pilot areas, by operation, Bicol River Basin area, 1976-77.	40

Page no.

Table 11. Problems in threshing and cleaning by farmers in the Bicol River Basin area, 1976-77. 41

Table 12. Quality characteristics of paddy samples by alternative postproduction systems, Bicol River Basin area, 1976-77. 42

Table 13. Problems in drying by farmers in the Bicol River Basin area, 1976-77. 43

Table 14. Comparative grain losses incurred from harvesting to threshing operations between traditional and improved methods, Bicol River Basin area, 1976-77. 45

Table 15. Relationship between elapsed time from harvesting to drying, grain yield, and % losses from alternative postproduction systems, Bicol River Basin area, 1976-77. 46

Table 16. Quality characteristics of paddy samples by alternative postproduction systems, Bicol River Basin area, 1976-77. 48

Table 17. Relationships between elapsed time from harvesting to drying and milling recovery for alternative postproduction systems, Bicol River Basin area, 1976-77. 49

Table 18. Estimated costs for alternative postproduction systems based on contractual labor inputs, Bicol River Basin area, 1976-77. 51

Table 19. Estimated costs for alternate postproduction systems based on actual labor inputs, Bicol River Basin area, 1976-77. 52

Table 20. Estimated costs and returns for alternate postproduction systems based on contractual labor, Bicol River Basin area, 1976-77. 53

Table 21. Estimated costs and returns for alternate postproduction systems, based on actual labor inputs, Bicol River Basin area, 1976-77. 54

Table 22. Cost budgets for axial flow and portable threshers. 60

Table 23. Cost budgets for three batch drying systems. 63

Table 24. Alternative milling systems included in the technical assessment study, wet and dry seasons, Bicol River Basin area, 1976-77. 67

Table 25. Rice mills included in technical assessment study, wet and dry seasons, Bicol River Basin area, 1976-77. 68

Table 26. Distribution of paddy sample (26 t) used in the technical assessment of nine alternative milling systems, wet and dry seasons, Bicol River Basin area, 1976-77. 72

Page no.

Table 27.	Total milled and head rice recovery for nine milling systems, wet and dry seasons, Bicol River Basin area, 1976-77.	74
Table 28.	Hulling and wholeness coefficients and hulling efficiency for six alternative milling systems, wet and dry seasons, Bicol River Basin area, 1976-77.	76
Table 29.	Milling recovery of cone type and steel huller mills as affected by alternate methods of handling, threshing, and drying in three pilot areas, Bicol River Basin area, 1976-77.	80
Table 30.	Head rice recovery of cone type and steel huller mills as affected by alternate method of handling, threshing, and drying in three pilot areas, Bicol River Basin area, 1976-77.	81
Table 31.	Names and addresses of mills included in the milling system monitoring activity, Bicol River Basin area, 1976-77.	83
Table 32.	Actual monthly utilization of monitored mills expressed as percentage of full capacity, Bicol River Basin area, 1976-77.	84
Table 33.	Characteristics of paddy samples collected during monitoring tours by milling system , Bicol River Basin area, 1976-77.	89
Table 34.	Distribution of paddy samples by milling system and grade, Bicol River Basin area, 1976-77.	90
Table 35.	Characteristics of milled rice samples collected during monitoring tours by milling systems, Bicol River Basin area, 1976-77.	95
Table 36.	Potential milling and head rice recovery of 150 paddy samples classified according to grade, Bicol River Basin area, 1976-77.	97
Table 37.	Potential total and head rice recovery of popular varieties, Bicol River Basin area, 1976-77.	98
Table 38.	Comparative milling performance of mills included in the monitoring schedule, Bicol River Basin area, 1976-77.	100

Page no.

Table 39.	Distribution of total and sample rice mills by type and capacity, Bicol River Basin area, 1976-77.	103
Table 40.	Distribution of sample mills by type and location, Bicol River Basin area, 1976-77.	105
Table 41.	General characteristics of rice mills by type and capacity, Bicol River Basin area, 1976-77.	106
Table 42.	Descriptive information for 53 rice mills by type and capacity, Bicol River Basin area, 1976-77.	107
Table 43.	Practices by mill type and capacity, Bicol River Basin area, 1976-77.	109
Table 44.	Average monthly utilization, as a percent of full capacity for 53 rice mills by type and capacity, Bicol River Basin area, 1976-77.	111
Table 45.	Mill utilization for peak and lean months by type and capacity, Bicol River Basin area, 1976-77.	115
Table 46.	Rice mill facilities by type and capacity, Bicol River Basin area, 1976-77.	116
Table 47.	Drying practices and facilities by mill type, 53 rice mills, Bicol River Basin area, 1976-77.	118
Table 48.	Other drying practices by mill type, 53 rice mills, Bicol River Basin area, 1976-77.	119.
Table 49.	Storage and warehousing facilities for 53 rice mills by mill type, Bicol River Basin area, 1976-77.	120
Table 50.	Reasons for choice of mill by mill type, Bicol River Basin area, 1976-77.	122
Table 51.	Capital investment by milling system , Bicol River Basin area, 1976-77.	124
Table 52.	Observed fixed costs by milling system, Bicol River Basin area, 1976-77.	125

Page no.

Table 53. Monthly variable costs for alternative milling systems, Bicol River Basin area, 1976-77. 126

Table 54. Fixed cost per ton for alternative milling systems at actual and projected farm utilization levels, Bicol River Basin area, 1976-77. 127

Table 55. Quantity of paddy processed by milling system at actual and projected utilization levels, Bicol River Basin area, 1976-77. 128

Table 56. Average total costs for alternative milling systems at actual and projected utilization levels. 129

Table 57. Revenue and profit per ton for alternative milling systems, Bicol River Basin area, 1976-77. 132

Table 58. Revenue per ton for alternative milling systems, Bicol River Basin area, 1976-77. 133

Table 59. Profit per ton for alternative milling systems, Bicol River Basin area, 1976-77. 136

Table 60. Profit per ton for different investment costs of rubber roll huller at different utilization rates, 1978. 138

Appendix tables:

A1 Estimated costs for alternate postproduction systems based on contractual labor, Libon, Albay, wet season, 1976-77.

A2 Estimated costs for alternate postproduction systems based on contractual labor, Libon, Albay, dry season, 1976-77.

A3 Estimated costs for alternate postproduction systems based on contractual labor, San Jose, Camarines Sur, 1976-77.

A4 Estimated costs for alternate postproduction systems based on contractual labor, Buhi, Camarines Sur, 1976-77.

Page no.

A5 Estimated costs for alternate postproduction systems based on actual labor inputs, Libon, Albay, wet season, 1976-77.

A6 Estimated costs for alternate postproduction systems based on actual labor inputs, Libon, Albay, dry season, 1976-77.

A7 Estimated costs for alternate postproduction systems based on actual labor inputs, San Jose, Camarines Sur, 1976-77.

A8 Estimated costs for alternate postproduction systems based on actual labor inputs, Buhi, Camarines Sur, 1976-77.

A9 Total milled and head rice recovery for eight milling systems, wet season, Bicol River Basin area, 1976-77.

A10 Total milled and head rice recovery for nine milling systems, dry season, Bicol River Basin area, 1976-77.

A11 Hulling and wholeness coefficients and hulling efficiency for six alternative systems, wet season, Bicol River Basin area, 1976-77.

A12 Hulling and wholeness coefficients and hulling efficiency for six alternative milling systems, dry season, Bicol River Basin area, 1976-77.

A13 Yearly fixed costs for different investment costs of rubber roll hullers, 1978.

A14 Fixed cost per ton for different investment costs of rubber roll huller at different utilization rates, 1978.

A15 Variable costs for different investment levels of rubber roll huller, 1978.

A16 Average total cost for different investment costs of rubber roll huller at different utilization rates, 1978.

PROJECT DESCRIPTION

Rice comprises the largest single crop in the Bicol Region. It is the largest source of food energy to the population and one of the main economic goods involved in trading and wage payments. Because of the relatively low population density, the high potential for increased output and export to other regions, and the current focus on integrated development in the region, the rice postproduction industry has become a priority target for modernization.

Farmers in the Bicol Region planted approximately 301,000 ha (Fig. 1) to rice in 1977-78.[1/] The area in production is almost evenly divided between the wet and the dry seasons. About 40% of the area is irrigated. Nearly one-half of total paddy production comes from irrigated areas while the remainder is grown on rainfed and upland farms. The statistics indicate a slightly higher increase in nonirrigated yields over irrigated areas in recent years. Improved varieties more adaptable to rainfed farms have been the major cause. There has been a moderate but definite upward trend in total paddy production during the past decade. An estimated 40 to 50% of the paddy rice never reaches commercial marketing channels, being retained in rural areas for home consumption. Much of this paddy is processed in more than 650 steel huller mills located throughout the area. Expanding the marketable surplus entering nonfarm markets, particularly markets outside the region, is a major objective of current development policy in the region. To achieve this objective means not only an expansion in on-farm production, but a substantial improvement in the technology, marketing mechanisms and policies effecting operations in harvesting, handling, threshing, drying, storage, transportation, milling, wholesaling and retailing.

BICOL RIVER BASIN DEVELOPMENT PROGRAM (BRBDP)

A major objective of the BRBDP agribusiness development program in the Bicol River Basin is the planning and implementation of activities that will increase the capability of the rice industry to deliver to consumers milled rice in increased quantities and with improved quality. There are two essential components in this program. The first focuses on the package of incentives and technology necessary to consolidate the gains of higher yields and greater production of paddy at the farm level. This involves harvesting, threshing, drying and farm level storage. The second component is improvement in the capability of processors, to procure, clean, mill, polish, and market milled rice. Both objectives combine economic and technological considerations.

1/ From the Bureau of Agricultural Economics, Ministry of Agriculture. Rice and Corn Survey. 1978

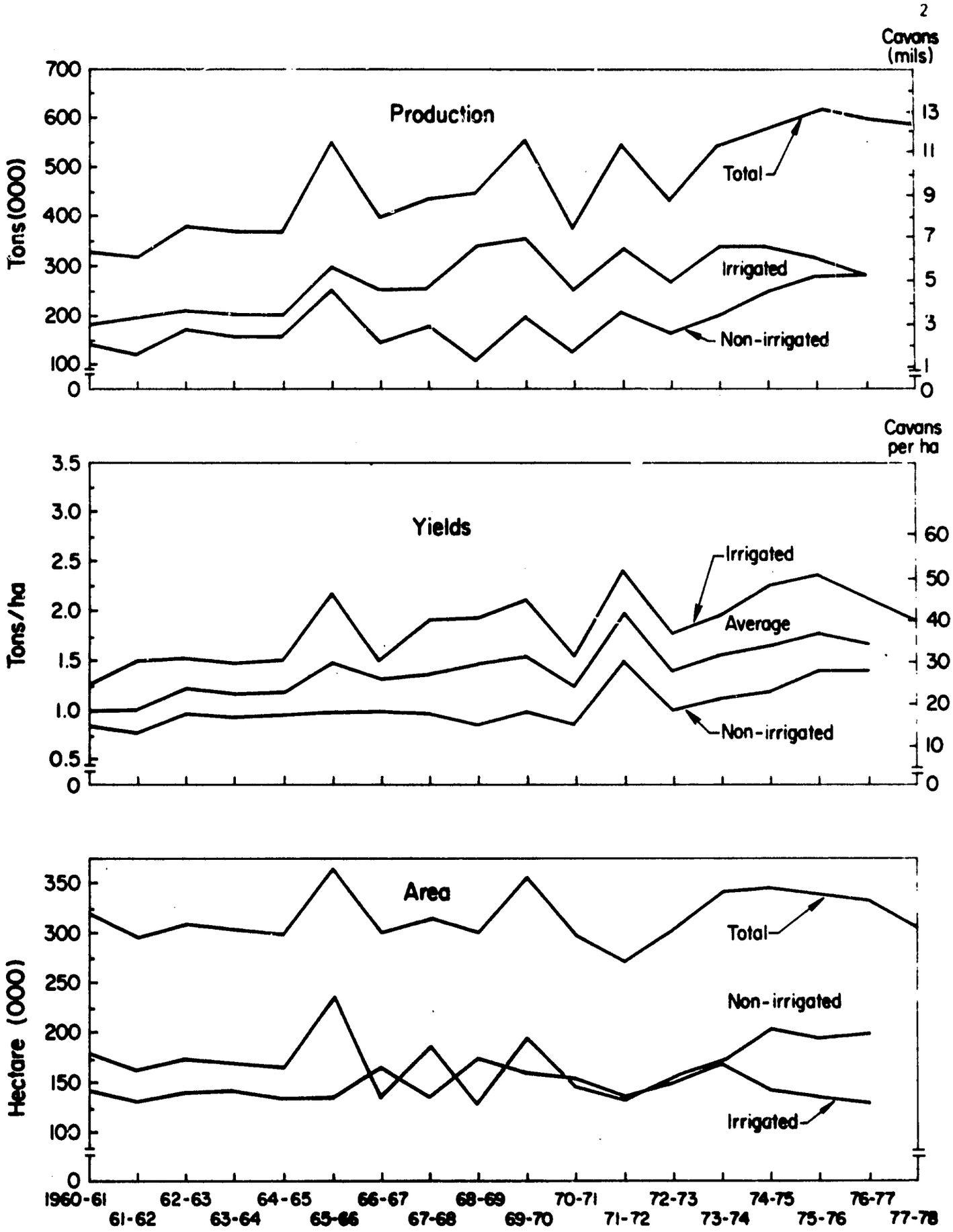

Figure 1. Area, yields, and total production of rice by degree of irrigation, in the Bicol Region, 1960 to 1978.

The present project is designed to provide benchmark data on the state of existing technology and, through extended field evaluation trials, determine the possible technical and socio-economic implications of introducing and using improved systems in the Bicol River Basin.

PROJECT OBJECTIVES

The major objectives of the project are:

1) To establish and demonstrate in selected villages a comprehensive set of trials to measure the technical and economic relationships embodied in several alternative farm-level postproduction systems.

2) To install, demonstrate, monitor and evaluate a series of mill-level postproduction systems, including a range of technologies that are not presently widely employed in the Bicol Region.

3) To compile and present data from these trials that can be incorporated into detailed feasibility studies providing the basis for program recommendations for improvement of the rice industry in the Bicol Region and other parts of the Philippines.

4) To evaluate the nature and characteristics of institutional and socio-economic constraints in existing systems and to recommend extension approaches that will facilitate introduction of appropriate farm- and mill-level postproduction technologies.

REVIEW OF PAST RESEARCH

IRRI initiated work in 1973 to investigate the magnitude and nature of field grain losses in paddy production. A field study undertaken to assess harvest losses (Samson and Duff, 1973) indicated significant differences in loss levels when comparing a) varieties, b) wet and dry seasons and c) moisture content at the time of harvest. In a related series of experimental trials, losses from handling, bundling, stacking, and field drying were also investigated. Total paddy losses approximated 1 to 3% for the harvest operation and 2 to 7% for prethreshing intermediate handling steps.

In an attempt to assess the qualitative changes resulting from these operations, total milled and head rice recoveries were recorded for both the harvesting and experimental handling trials. Significant decreases in both total and head rice were observed due to delays in the timing of harvest with the greatest effects being recorded between head rice recovery and moisture content at the time of harvest.

In 1973-74, a survey of rice milling and field level operations was undertaken (Toquero and Duff, 1975). One hundred and eighty rice mills and approximately 600 farmers were surveyed in three regions of the Philippines. These surveys were designed to inventory existing rice postproduction operations. The preliminary results have been summarized in a number of working papers issued by the IRRI Engineering Department (shown in the attached reference list).

The Department of Process Engineering of the University of the Philippines in Los Baños has carried out a number of technical studies to evaluate the comparative performance of alternative processing technologies (Camacho, et al, 1975).

Studies by Toquero and Duff (1976), J. Alkuino (1974) and I. Getubig (1975) have examined the characteristics of the rice marketing and processing industry in the Bicol Region. These studies indicate that the region has a significant volume of unutilized milling and storage capacity and that current farm practices are not conducive to the production of high quality paddy or milled rice. There exists a number of technical inefficiencies in components of existing systems. Using economic criteria, however, it appears the industry is performing rationally, suggesting that changes in technology must be preceded or accompanied by changes in incentives and policies.

PROJECT METHODOLOGY

Farm level. Trials were conducted at three locations in Camarines Sur and Albay (Fig. 2). Four systems involving alternative combinations of technology and management were utilized in the farm level trials (Fig. 3). Harvesting in all four systems was with a scythe or sickle.

System I exemplifies the traditional technology. Threshing was entirely manual with the operator using either a threshing frame ("hampasan"), flail, stick, or manual treading. Threshed paddy was sun-dried prior to storage or milling. System I acted as a control against which the results from other systems were compared.

Systems II and III combine elements of traditional and improved systems in the threshing and drying operations. In System II, threshing was performed manually, but a twin-bed batch dryer was used to remove moisture prior to storage. In system III, the mechanical thresher was used immediately following harvest, although the paddy was sun-dried.

Improved technology was used in System IV. Paddy was mechanically threshed with the axial-flow thresher and subsequently dried in a twin-bed batch dryer.

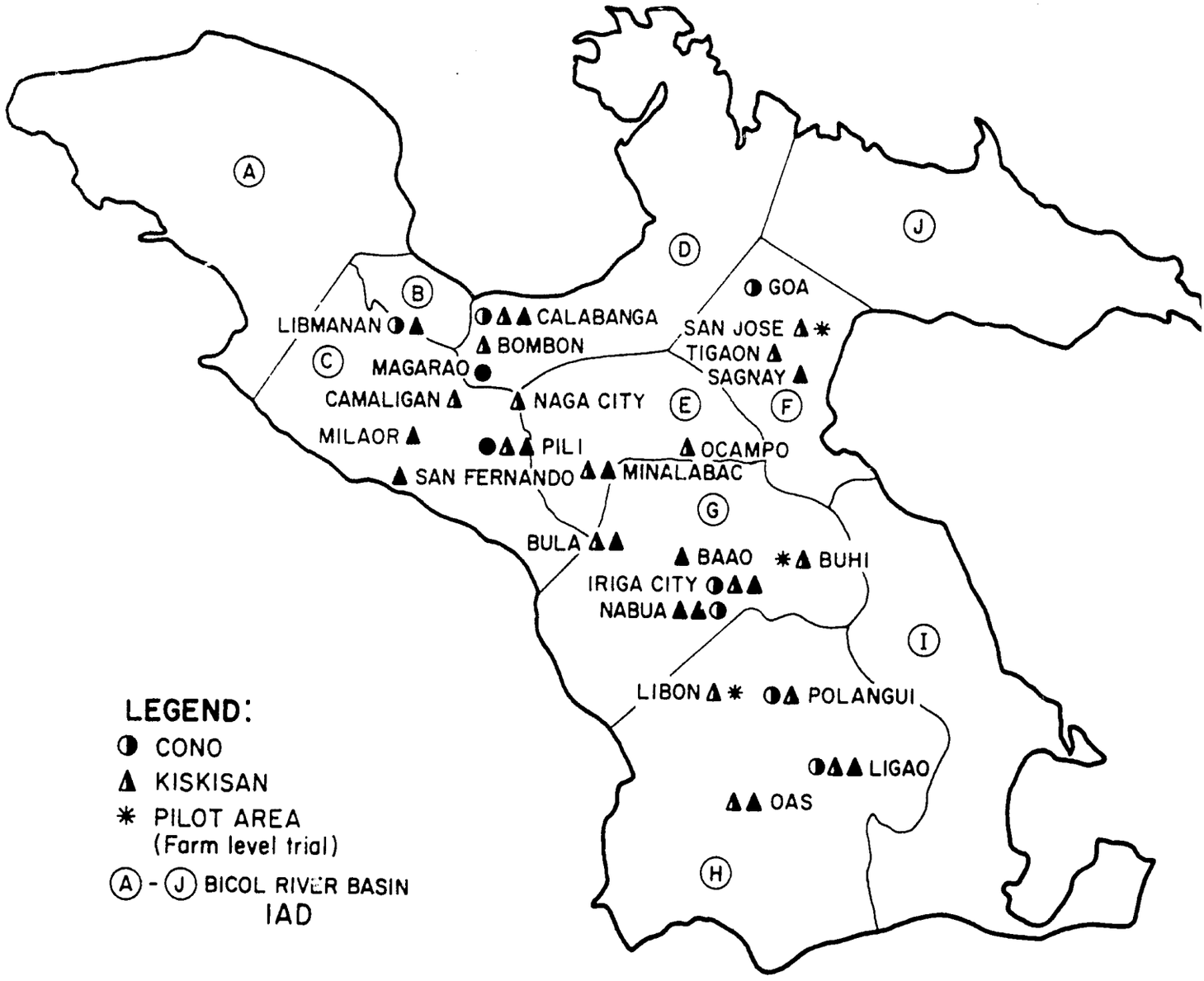

Figure 2. Areas included in the farm and mill level survey, Bicol River Basin, 1976-77.

PILOT PROJECT

FARM LEVEL POST PRODUCTION SYSTEMS

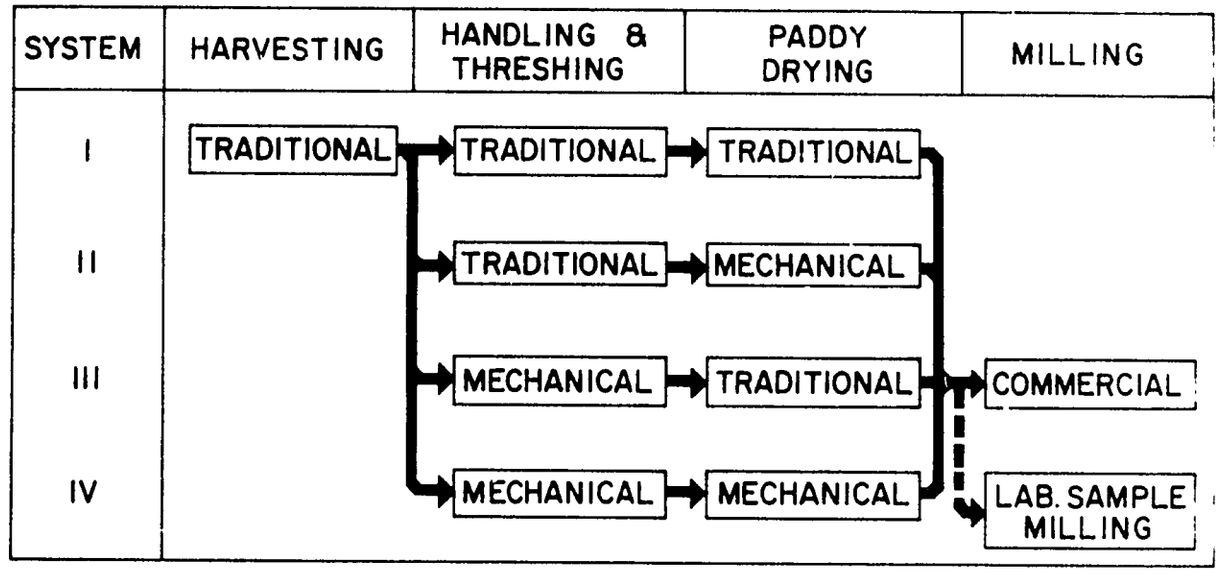

MEASUREMENTS (for each system)

• Crop cut samples • Paddy samples • Moisture content	• Post threshing output • Paddy samples • Moisture content	• Post drying output • Paddy samples • Moisture content	• Total rice • Head rice • By products

Figure 3. Alternative farm level postproduction systems.

Systems I and IV have a minimum paddy requirement of 1.75 t each to permit replicated commercial milling tests. Systems II and III require a minimum of 1.0 t each. Depending on the minimum requirement per system, one or more paddy fields were used for each system treatment. When more than one field was required, every attempt was made to ensure comparable variety and planting dates.

The area of the field(s) selected for each system was measured and recorded. Farm maps were prepared as guides in planning and scheduling farm operations (Fig. 4).

Replicated crop-cut samples were taken for each system to measure the potential yield at the field level. To obtain actual area yields, plots were measured and the grain from each was weighed following threshing and again following drying. All yield and weight measurements were corrected for moisture content and impurities. To determine the quality of paddy and milled rice, 750-g samples were taken following each operation in each system and later dried, milled, and analyzed in the laboratory (Fig. 5).

Quantitative losses were measured at each stage in the postproduction operations. Estimated harvesting losses were determined using a 2 m^2 sample frame. Following harvest, paddy was bundled and stacked and grain that had either fallen on the ground or remained unharvested within each sample area was handpicked and weighed (Fig. 6). This process was replicated two or more times per plot, depending on the total area involved in a given system. To measure stacking losses, harvested materials were placed on canvas sheets provided to farmer cooperators. Following the stacking operation, grain remaining on the sheets was weighed. Losses incurred using the traditional system of threshing were determined by weighing the paddy recovered by gleaners or "mambabarog" (people rethreshing the paddy). For mechanical threshing, canvas mats were used to recover and measure paddy discharged on the ground.

The labor employed for each operation within individual systems, the costs incurred to perform each operation, and the total elapsed times required to complete an entire sequence of operations were recorded. The quantitative and qualitative measurements necessary to impute relative benefits and costs for each system were also compiled.

In addition to the field level operational trials, concurrent interviews were conducted among sample farmer-members of associations in the three pilot areas. These interviews are designed to examine farmers' postproduction practices, attitudes, and preferences toward use of alternative milling and processing technologies, problems and suggested improvements, and paddy production and disposal.

The threshers and dryers used in the pilot trials were purchased through the project fund and sold to the farmers' association selected for the field trials. An Equipment Purchase Agreement was signed by the president of the association (Appendix B). Under the terms of the purchase

Fig. 4. Measurement of plot size and taking replicated crop cut samples in the Bicol Region 1976-77.

Fig. 5. Recording plot data for crop cut samples and measuring moisture content prior to drying samples.

Fig. 6. Assessing harvest and preharvest field losses and weighing output from field systems trials.

agreement, the BRBDP sells the equipment (one thresher and one twin-bed batch dryer) to the farmers' association. The machines are amortized over not more than 5 years with 8% interest charged on the unpaid balance. Payment is from fees charged members and other users of the equipment. Forty percent of the gross income from the equipment is used for yearly amortization and 60% is retained by the association to defray labor, fuel, and maintenance costs.

Mill level. Because the focus of the project was to village level operations, major emphasis was placed on the identification of constraints in the processing sector in rural areas. However, because this sector is not isolated from nonfarm markets, it was decided to expand the scope of the project to evaluate the performance and economics of commercial processing facilities. This strategy also permitted a series of comparisons to be developed between technologies in both sectors.

Four approaches were used in the evaluation of rice mills. The first was a series of technical evaluation trials covering a range of technologies. Some technologies were in common use throughout the region, others were unique. Associated with the technical trials was a survey of mill operations to determine their economic and institutional characteristics. A third portion of the study was a set of experiments that were linked with the farm-level systems trials. Paddy from two alternative farm-level systems was processed in a number of alternative milling units to determine if there were interactions between operations at the farm level and the performance of the rice mill. A fourth activity was a continuous monitoring survey of a number of selected rice mills throughout the study area to determine utilization patterns, procurement and trading practices, and the nature of demand for milling services.

FARM LEVEL SURVEY AND FIELD TRIALS

One hundred thirty-seven members from farmers' associations in the three pilot areas were interviewed to determine the nature of farm production practices. These farmers were also asked their preferences and attitudes regarding different types of postharvest systems being used in the area. This information was gathered to complement the data collected during the field trials involving various combinations of postproduction techniques.

DESCRIPTION OF RESPONDENTS

Farm area. The average farm size in the three sites was 1.7 ha--Buhi having the smallest with 1.023 and Libon the largest with 2.7. The average area per farm devoted to rice for the three villages was 1.4 ha or 93% of the total area (Table 1). Eighty-two percent of the farms were irrigated, 10% rainfed, and 8% both irrigated and rainfed.

Table 1. Basic information on the 137 farmers interviewed, Bicol River Basin area, 1976-77.

	Libon	San Jose	Buhi	All
No. of respondents	40	27	70	137
The Farmer				
Av. age	50	51	47	49
Av. yrs. of education	7	5	5	6
Tenure status: (%)		% values		
Lease tenant	65	85	33	53
Owner cultivator	15	-	28	18
Share tenant	12	4	23	16
Lease tenant-owner	5	7	6	6
Owner-share tenant	-	-	6	3
Share tenant-lease tenant	-	-	4	2
Amortizing owner	3	4	-	2
The Farm		mean values		
Total area (av. ha)	2.745	1.848	1.023	1.694
Area devoted to rice (av.ha)	2.207	1.839	0.841	1.441
% rice area of total area	91.07	99.66	88.82	93.18
Source of water:		% values		
Gravity	85	100	74	82
Rainfed	15	-	10	10
Gravity & rainfed	-	-	16	8
Type of rice mill commonly used:		% values		
Steel huller	92	85	92	91
Cone type	8	4	6	6
Traveling mill	-	7	1	2
Steel huller & cone type	-	4	-	1

The farmer. The average age of the farmers interviewed was 49 years. Libon farmers had the highest educational attainment at 7 years, while both San Jose and Buhi farmers averaged 5 years. Fifty-three percent of the farmers were lease tenants, 18% owners, and 16% share tenants. There were also some combinations of lease tenants and owners (6%), owner and share tenants (3%), and share tenants and lease tenants (2%). Only 2% were amortizing owners. All respondents planted two crops a year.

Ninety-one percent of the farmers interviewed used the "kiskisan" or steel huller type of mill to process their paddy, while 6% used disc cone type mills. Only 2% used the traveling mills, and 1% used a combination of the disc cone and steel huller type mills.

POSTHARVEST PRACTICES

The three pilot sites varied little in the nature of their postproduction operations. Attitudes and preferences regarding different technologies and problems associated with farming also showed basic similarities.

Harvesting practices. Before farmers harvest, they use several criteria to determine crop maturity and suitability for harvesting (Table 2). Although the farmers do use some guidelines for determining the timing of harvest, a few delay or advance the operation. Though most harvested at maturity 5% delayed up to 10 days and a few advanced the harvest 1 to 10 days before maturity.

All farmers used manual methods of harvesting and field handling, primarily the scythe or sickle. The straw length depends on factors such as variety and method of threshing.

Before threshing, paddy usually undergoes several handling processes--cutting and laying, bundling, field drying, hauling, stacking. Table 2 also shows paddy passes through varying numbers of handling processes before threshing. These are similar to findings of an earlier study in Central Luzon (Toquero, et al 1974). Farmers cited unfavorable weather as the most common problem at harvest (Table 3).

Threshing practices. Thirty-eight percent of the farmers used mechanical threshers (Fig. 7). Use of flails or sticks (Fig. 8) was reported by 19% of the farmers while 12% employed foot treading. All others reported use of different combinations of threshing methods.

Among the three pilot areas, Libon had the greatest number who used mechanical threshers while San Jose still practices traditional methods--beating paddy against a tub, ladder or bamboo frame. Buhi tended to fall between the other two areas.

Table 2. Harvesting practices, 137 farmers, Bicol River Basin area, 1976-77.

	Libon	San Jose	Buhi	All sites
		% values		
Gauge as to time to harvest:				
90-100% ripe grains	75	40	59	60
Based on maturity date	12	26	24	21
70-89% ripe grains	8	26	7	11
Yellowing of grains/ 50-69% ripe grains/ other combinations	5	8	10	8
Total	100	100	100	100
Time of harvesting:				
At maturity	93	100	70	83
After maturity	2	-	25	12
Before maturity	5	-	5	5
Total	100	100	100	100
Length of cutting stalks:				
< 2 ft from base of panicle	80	35	86	74
2-3 ft from base of panicle	10	59	9	19
Depends on factors (variety, threshing, method)	10	6	5	7
Total	100	100	100	100
No. of times palay is handled before threshing:				
3	48	80	41	51
4	44	13	5	18
2	8	7	33	18
1, 5-7	-	-	21	13
Total	100	100	100	100

Table 3. Problems in harvesting encountered by 137 farmers in the Bicol River Basin area, 1976-77.

Problem encountered	Libon	San Jose	Buhi	All
		% values		
Unfavorable weather	14	59	56	45
None	45	29	30	34
Too many harvesters resulting to higher fees	13	4	2	5
Field losses due to inefficient harvesters/dishonesty of harvesters	10	2	4	5
Stealing of paddy (stacked/ bundled, cut, etc) in the field	12	4	1	5
Lack of harvesters	6	2	3	3
Need to haul paddy with stalks due to flooded field, etc.	-	-	4	3
Total	100	100	100	100

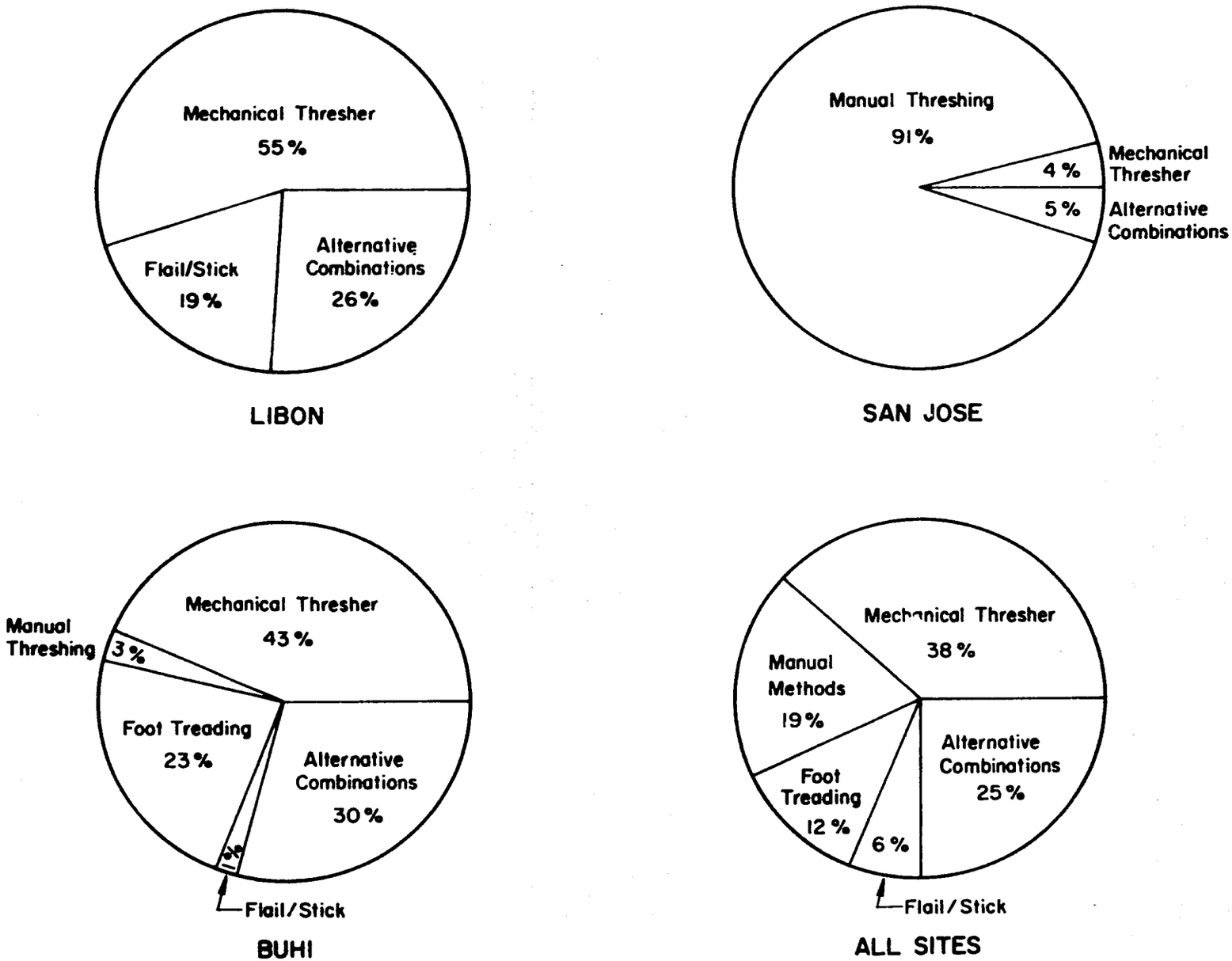

Figure 7. Methods of threshing employed by 137 farmers in three villages of the Bicol Region, 1976-77.

Fig. 3. Threshing with broad-type machine and using a hand flail.

Drying practices. Solar drying was the prevailing technique throughout the area. Mats, plastic sheets or canvas were most popular as underlays (Table 4). Others utilized concrete roads or highways, cement pavement at rice mills, basketball courts or school yards and combinations of different types of drying facilities.

In Libon and San Jose, concrete pavement was used most for drying. In Buhi, the most common drying facilities were mats, plastic sheets and canvas. Nearly two-thirds of the respondents used their own drying facilities. Publicly and privately owned facilities used were nearly equal. Few used drying facilities owned by the mill owners. In Libon, drying facilities owned by the public or the government and those owned by farmers were used most. In San Jose, drying facilities owned by farmers were used most, followed by those owned by the public or government. In Buhi, most farmers used their own facilities. Other facilities were either owned by the public or private individuals.

Storage practices. The most common home storage facilities were sacks or bags, followed by wooden boxes, other types such as galvanized sheets, and a combination of both sacks and wooden boxes (Table 5)[1/]. The same trend held for the individual pilot areas. Paddy to be sold is generally stored in sacks.

Among the 137 farmers interviewed only 7% stored their paddy at rice mills. Most farmers who stored paddy at the rice mill indicated it was safe and convenient or were members of the FACOMA[2/] or mill owners (Table 6). Those who did not store paddy at a mill indicated they used their own facilities or that they had no surplus to store.

Trading practices. Nearly two-thirds of the farmers in the Bicol River Basin area sold their paddy immediately after threshing (Table 7). San Jose tended to sell most of its paddy immediately, Buhi was about average, and Libon sold less than half right after threshing.

Farmers tended not to dry their paddy before sale. Those who did were due to price and weight differential. This indicates dried paddy commands somewhat higher prices. Others said drying was a requirement imposed by buyers.

[1/] Similar to findings by Toquero, et al., 1974, Takai, 1978 and Toquero, 1974. No attempt was made to assess the nature of losses in storage although this is the topic of a current study at IRRI (Takai, 1978).

[2/] A cooperative marketing association.

Table 4. Drying practices of 137 farmers in the Bicol River Basin area, 1976-77.

Practice	Libon	San Jose	Buhi	All
		% values		
Type of drying facilities used:				
Mats/plastic/canvas	10	24	66	41
Cemented "patio" or pavement	30	30	19	24
Cemented road/highway	22	16	-	10
Alternative combinations	28	30	15	24
Total	100	100	100	100
Owner of drying facilities:				
Farmer	32	39	88	62
Public/government	35	26	1	16
Private individual/land owner	20	13	6	12
Mill owner	-	7	1	2
Combinations	13	15	4	8
Total	100	100	100	100

Table 5.. Storage practices of 137 farmers in the Bicol River Basin area, 1976-77.

Practice	Libon	San Jose	Buhi	All
		% values		
Type of storage used:				
For home consumption:				
Sack	70	59	69	67
Wooden box	10	30	18	18
Others	10	7	7	9
Combination	10	4	6	6
Total	100	100	100	100
For sale:				
Sacks	97	93	91	93
Wooden box	-	7	3	3
Baskets, etc.	3	-	6	4
Total	100	100	100	100
Storing paddy in the mill house				
Yes	12	-	7	7
No	88	100	93	93
Total	100	100	100	100

Table 6. Reasons for storing/not storing paddy at the mill, 137 farmers in the Bicol River Basin area, 1976-77.

Reasons	San Jose	Libon	Buhi	All
		% values		
FOR				
Free, safe and convenient	26	30	53	41
Member of FACOMA/mill owner	59	35	31	38
Warehouse insured	7	5	3	4
Near and accessible	-	8	2	3
Speculating for higher price	-	5	-	2
Combination of the above	4	14	8	9
AGAINST				
Uses own facilities	-	3	3	2
No surplus	4	-	-	1
Total	100	100	100	100

Table 7. Trading practices, 137 farmers at the Bicol River Basin area, 1976-77.

Items		San Jose	Libon	Buhi	All
			% values		
Sell palay immediately after threshing:	yes	89	40	67	63
	no	7	45	27	29
	it depends	4	15	6	8
	Total	100	100	100	100

Dry palay for sale & reasons	Wet season	Dry season
For YES	(30)	(25)
Price/weight differential	22	18
Required by buyers	4	3
Combinations	4	4
For NO	(70)	(75)
Saved from the trouble of drying	32	32
Wet paddy is heavier	19	19
Cash is badly needed	15	16
Paddy already dried in the field	-	4
No storage facilities	2	2
Accepted by buyers even if wet	1	1
Combinations	1	1

Table ..... cont'd.

			% values	
Most preferred buyer				
Wholesaler/retailer	13	32	49	35
Mill owners/FACOMA	-	28	33	22
None	19	20	14	17
NGA/RCA, etc.	38	-	4	12
Other farmer-buyers	18	20	-	10
Middlemen/merchants, etc.	12	-	-	4
Total	100	100	100	100
Least preferred buyer				
None	34	52	78	59
Middlemen/merchants/viajeros	33	28	11	21
Mill owners, FACOMA	3	8	2	4
Wholesaler/retailer	24	4	9	12
NGA/RCA, etc.	6	4	-	3
Other farmer-buyers	-	4	-	1
Total	100	100	100	100
Who sets the price of paddy				
Buyer	58	68	100	81
Haggle bet. farmer & buyer	24	28	-	13
Farmer	18	4	-	6
Total	100	100	100	100
Method of payment				
Cash on delivery	100	100	98	99
Paid in advance	-	-	2	1
Total	100	100	100	100

Table ..... cont'd.

	% values			
Price difference by method of payment				
Yes	3	12	6	6
No	97	88	81	88
Don't know	-	-	13	6
Total	100	100	100	100
Do you sell milled rice				
Yes	5	7	48	27
No	95	93	52	73
Total	100	100	100	100
Do you buy rice for home consumption				
Yes	62	59	76	68
No	35	41	24	31
Sometimes	3	-	-	1
Total	100	100	100	100

However, nearly three-fourths of the farmers did not dry their paddy before sale. During the wet season, one-third said they were not required to dry as a condition of sale. This was also the main reason given for the dry season. Some said wet paddy was heavier and they received higher prices. Another important reason given was the immediate need for cash or distress sales. Other reasons were lack of storage facilities, wet paddy was accepted by buyers, or that paddy was dried in the field.

In selling paddy, about one-third preferred wholesalers/retailers, while one-fifth mentioned mill owners of FACOMAs as their most preferred buyers. One-fifth mentioned middlemen and a few indicated wholesaler/retailers as their least preferred buyers. Others mentioned NGA,[1/] mill owners, FACOMA and other farmer buyers as the least preferred buyers.

According to majority of the farmers, it is usually the buyer who sets the price. Some do bargain with buyers over price and a few reported that it is the farmer who sets the price. In Buhi, however, 100% reported that it is the buyer who sets the price.

The usual method of payment is cash on delivery (99%). A few reported being paid in advance. Eighty-eight percent said there was no difference in price by method of payment while six percent said there was.

There were 27% who sold milled rice, 68% bought rice for home consumption.

PRODUCTION AND DISPOSAL OF PADDY

From the farm survey results it was possible to trace the pattern of paddy disposal for the 137 farmers interviewed. Table 8 and Fig. 9 indicate two-thirds of total farm production (which averaged to 171.72 cavans per farm) was retained as the operator's share. The remaining one-third went to the landlord and the harvester/thresher.

The operator retained about one fourth for home consumption and sold nearly one-third either fresh or dry.

Marketable surplus is the portion of the operator's share remaining after deducting seed requirements and home consumption needs. Table 8 also shows the marketable surplus for the three pilot areas averaged 41.1% ranging from 27% in Buhi to 49.2% in Libon. Fig. 10a indicates that as total production increases marketable surplus also increases significantly. Similarly, Fig. 10b shows that with an increase in the operator's share, there will be proportionately greater increase in the marketable surplus.

[1/] National Grains Authority, the Agency of the Philippine Government responsible for price support and procurement.

Table 8. Production and disposal of paddy by 137 rice farmers in the Bicol River Basin area, 1976-77.

	Libon	Buhi	San Jose	All
Effective rice area per farm (ha)	3.97	1.58	3.73	2.71
Production per farm (cavans)	223.18	103.21	273.11	171.72
		% values		
H/T share	12.5	16.0	12.4	13.5
Seeds	0.3	0.8	0.1	0.4
Others	0.3	1.2	-	0.5
Landlord's share	15.2	18.0	20.5	17.8
Operator's share	71.7	64.0	67.0	67.8
Home consumption	19.7	35.0	20.0	24.5
Seeds	2.8	2.0	1.8	2.2
Others	8.7	8.5	13.4	10.1
Quantity sold	40.5	18.5	31.8	31.0
Marketable surplus	49.2	27.0	45.2	41.1

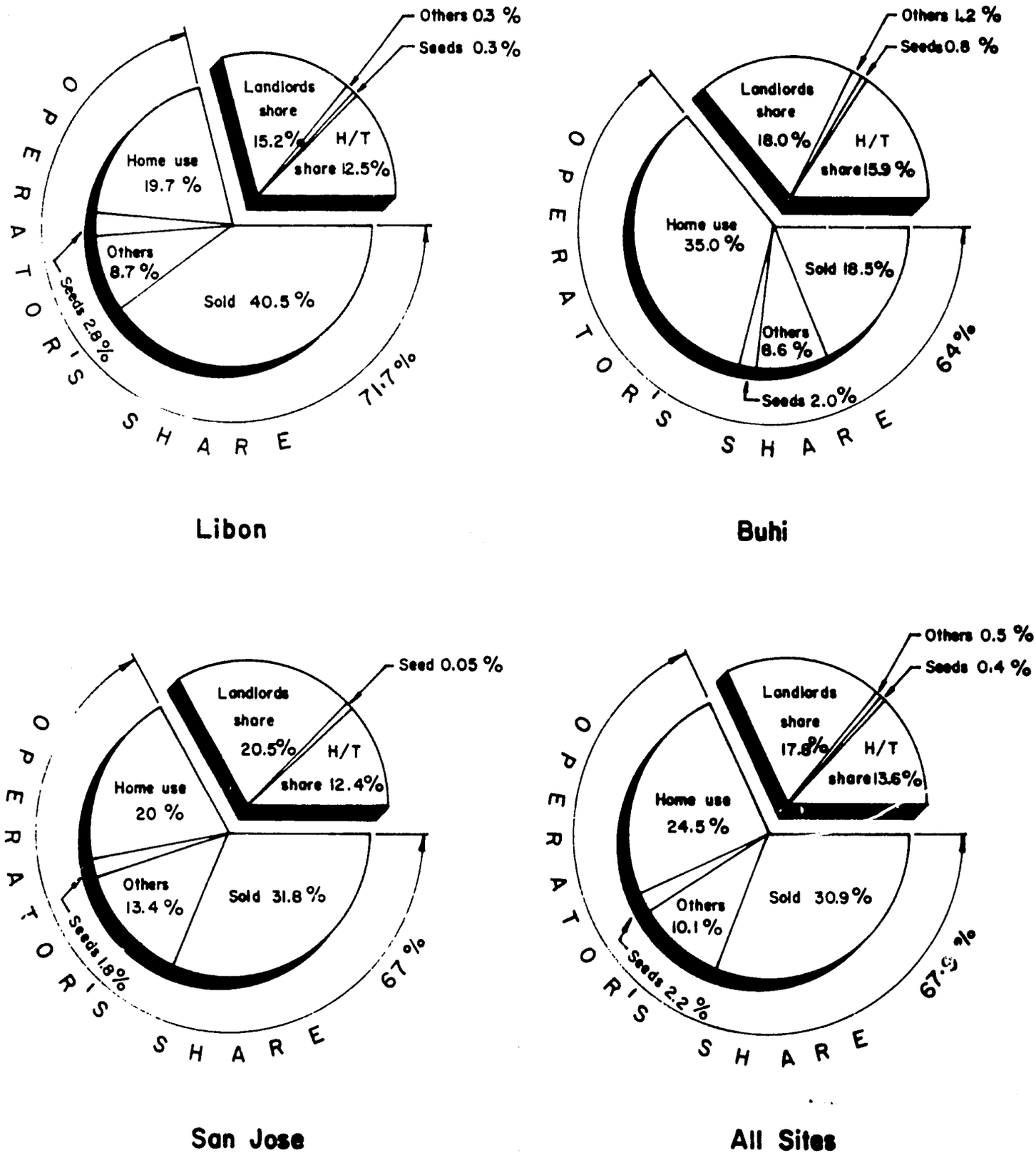

Figure 9. Production and disposal of paddy by 137 farmers in three villages of the Bicol Region, 1976-77.

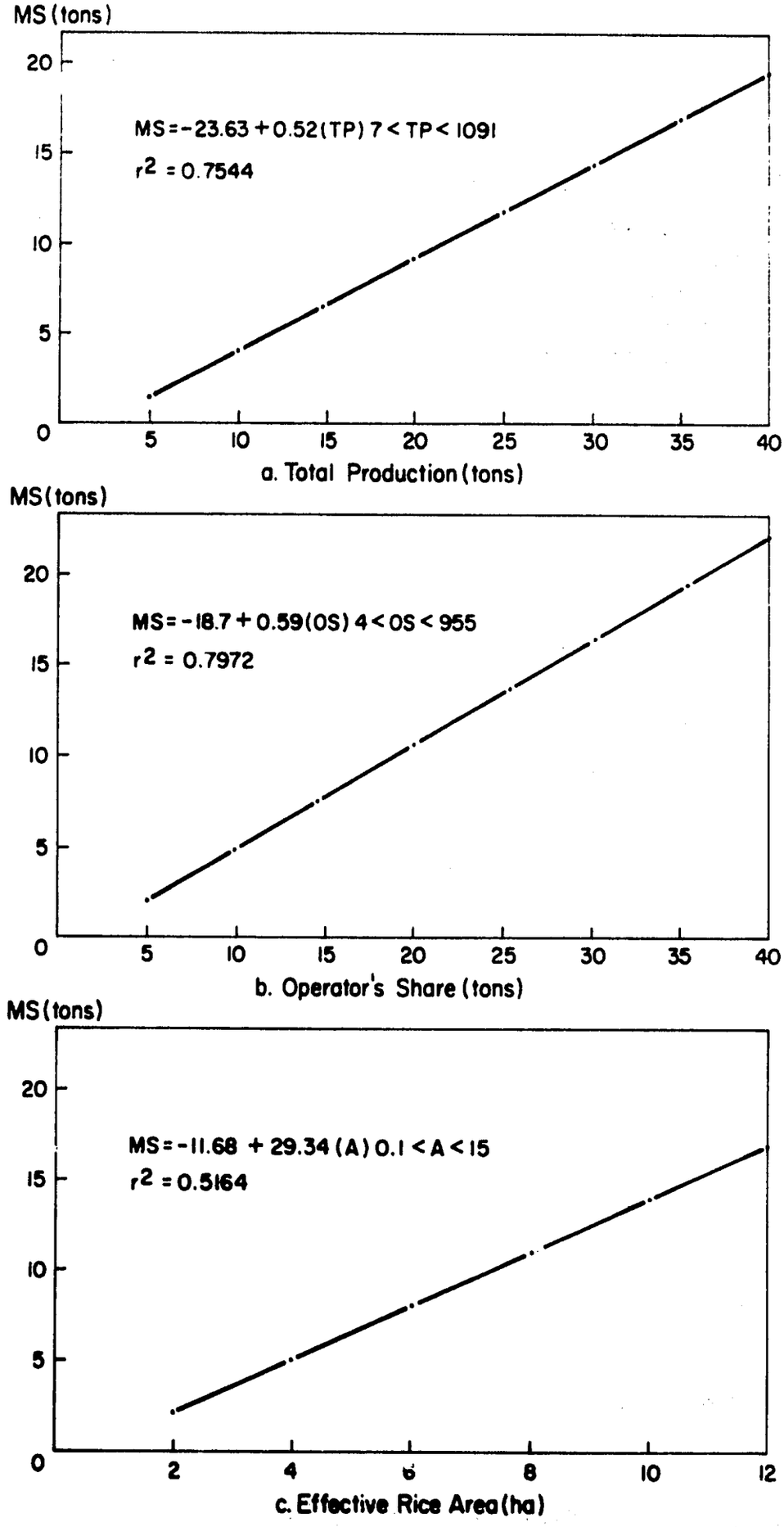

Figure 10. Effect of total production, operator's share, and effective rice area on marketable surplus.

The effect of an increase in the farm area planted to rice will also increase marketable surplus, but not in the same proportion as noted for changes in the operator's share or total production (Fig. 10c).

Farm level field trials.

Farm level applied research and demonstration trials were conducted in the Bicol River Basin area during the 1976 wet and 1977 dry seasons. Three locations were selected for these studies: Libon, Albay -- for both the wet and dry seasons, and San Jose and Buhi, Camarines Sur, for the dry season trials (Fig. 11).

Seventeen farmer-cooperators having a total of 150 plots with an average area of 1,220 sq m per plot were included in the trials. Average yield[1/] was 4.30 t/ha. Five varieties were planted. Details regarding the farms are shown in Table 9 and illustrated in Figures 3, 4, 5 and 6.

POST PRODUCTION OPERATIONS AND LABOR REQUIREMENTS

Detailed labor data were recorded for each operation in each system. The results shown in Table 10a and Fig. 12 indicate that the traditional system (System I) had a much higher total labor requirement than the improved system (System IV) on both per ton and per hectare basis. Similarly, the systems embodying both traditional and improved technologies (Systems II and III) also had lower labor requirements per ha and per ton than the traditional system.

Moreover, labor requirements in relation to yield between the traditional and improved systems are compared by operation and the results are shown in Fig. 13. For harvesting operations, it shows that as yield is increased, labor requirement per ton is decreased for both the improved and the traditional systems. The improved systems however, shows a greater reduction than the traditional system.

Similarly in the threshing operation, labor requirement per ton for improved system is significantly lower than the traditional system and it shows only a very slight reduction as yield is increased. The traditional system on the other hand, shows a great reduction in labor requirement per ton as yield increases.

[1/] Yield is paddy weight after drying to 14% moisture content and standardizing for purity.

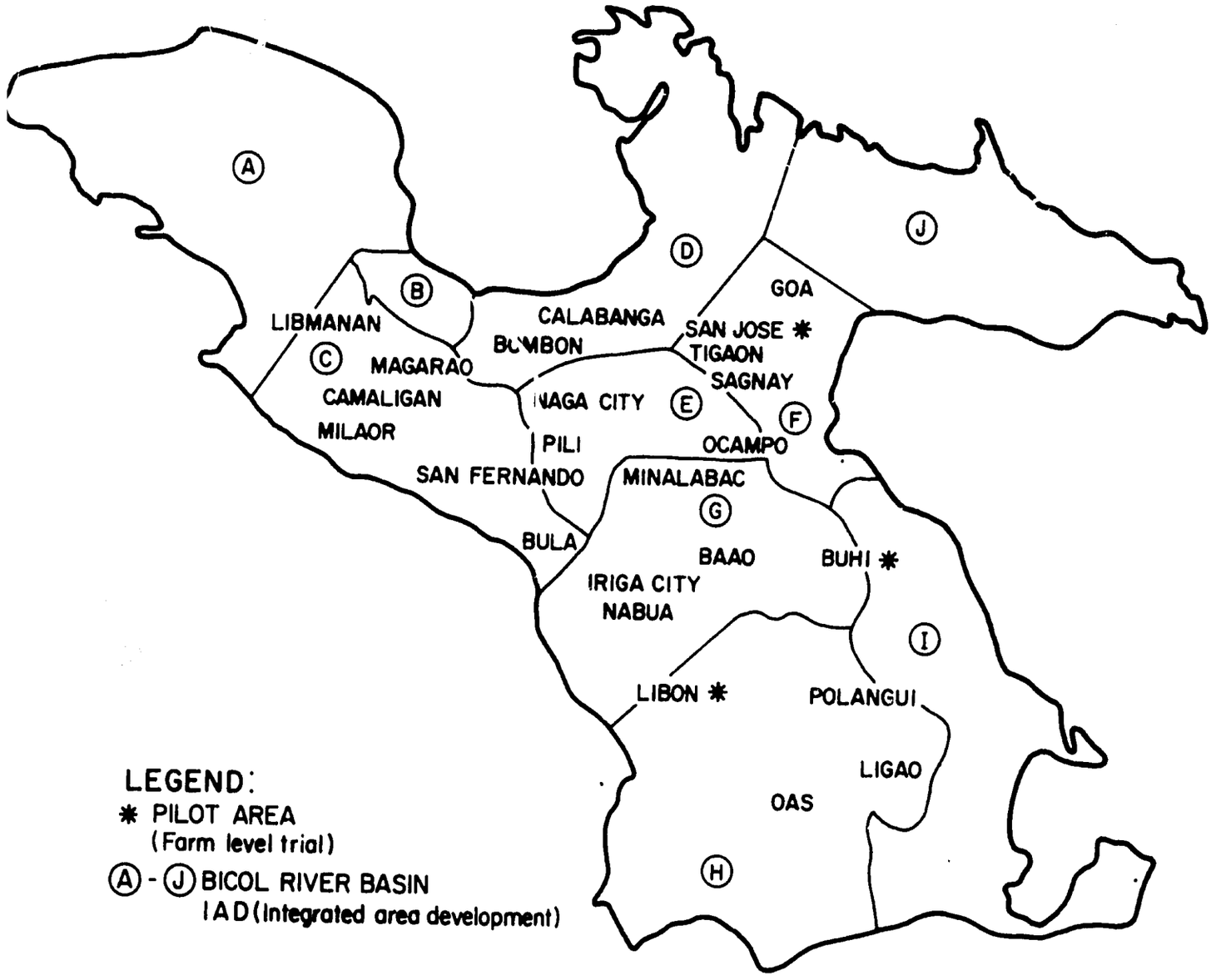

Figure 11. Areas included in the farm level field trial and survey Bicol River Basin area, 1976-77.

Table 9. General characteristics of the three villages included in the postproduction pilot trials, Bicol River Basin area, 1976-77.

Location	Season	No. of cooperators	No. of plots	Av. area of plot (sq m)	Av. yield[a] t/ha	Variety planted
Libon, Albay	wet	3	25	1209.2	2.13	1. C4
	dry	5	32	1739.4	3.36	1. C4 2. IR26 3. Peta
San Jose, C. S.	dry	5	54	1069.4	4.25	1. C4 2. IR20 3. IR26 4. IR30
Buhi, C. S.	dry	4	39	1017.0	4.19	1. C4 2. IR26
All sites		17	150	1222.0	4.30	

[a] Final paddy weight (kg) after drying to 14% MC and adjusting to purity.

Table 10a. Comparative labor requirements per ton and per hectare by operation in alternate postproduction systems, Bicol River Basin area, 1976-77.

	Postproduction system [a]			
	I	II	III	IV
	m-h/t [b]			
Harvesting	44	42	45	40
Threshing	47	46	12	14
Drying	8	4	11	4
Total	99	92	68	58
	m-h/ha			
Harvesting	139	147	174	142
Threshing	151	158	45	49
Drying	27	14	47	14
Total	317	318	266	205

[a] System
I - involves traditional threshing and traditional drying (sun)
II - involves traditional threshing and mechanical drying
III - involves mechanical threshing and sun drying
IV - involves mechanical threshing and mechanical drying

[b] Yield based on weight of paddy (kg) after drying to 14% MC and adjusting to purity.

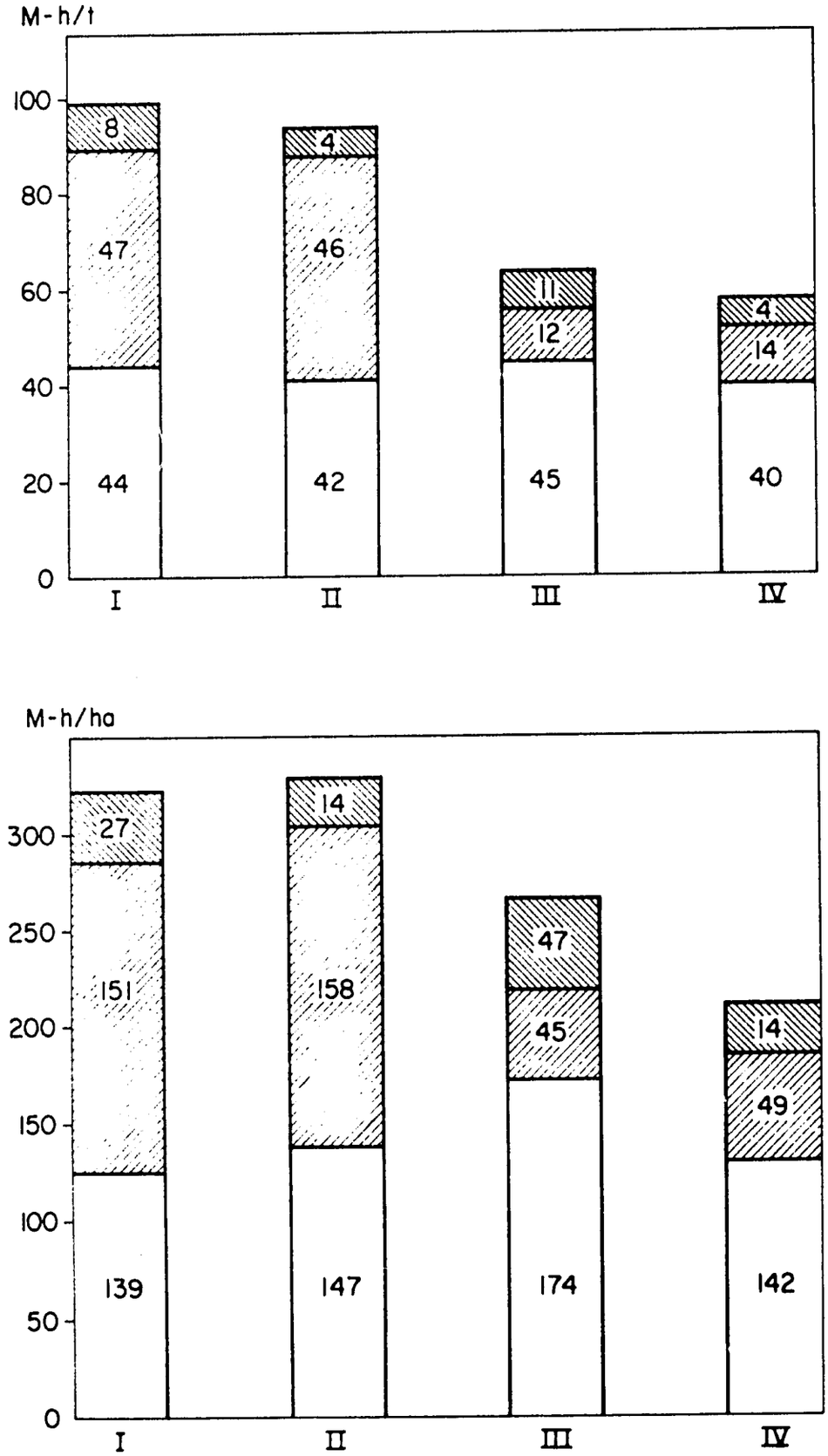

Figure 12. Comparative labor requirements per ton and per hectare by operation in alternate postproduction systems, Bicol River Basin area, 1976-77.

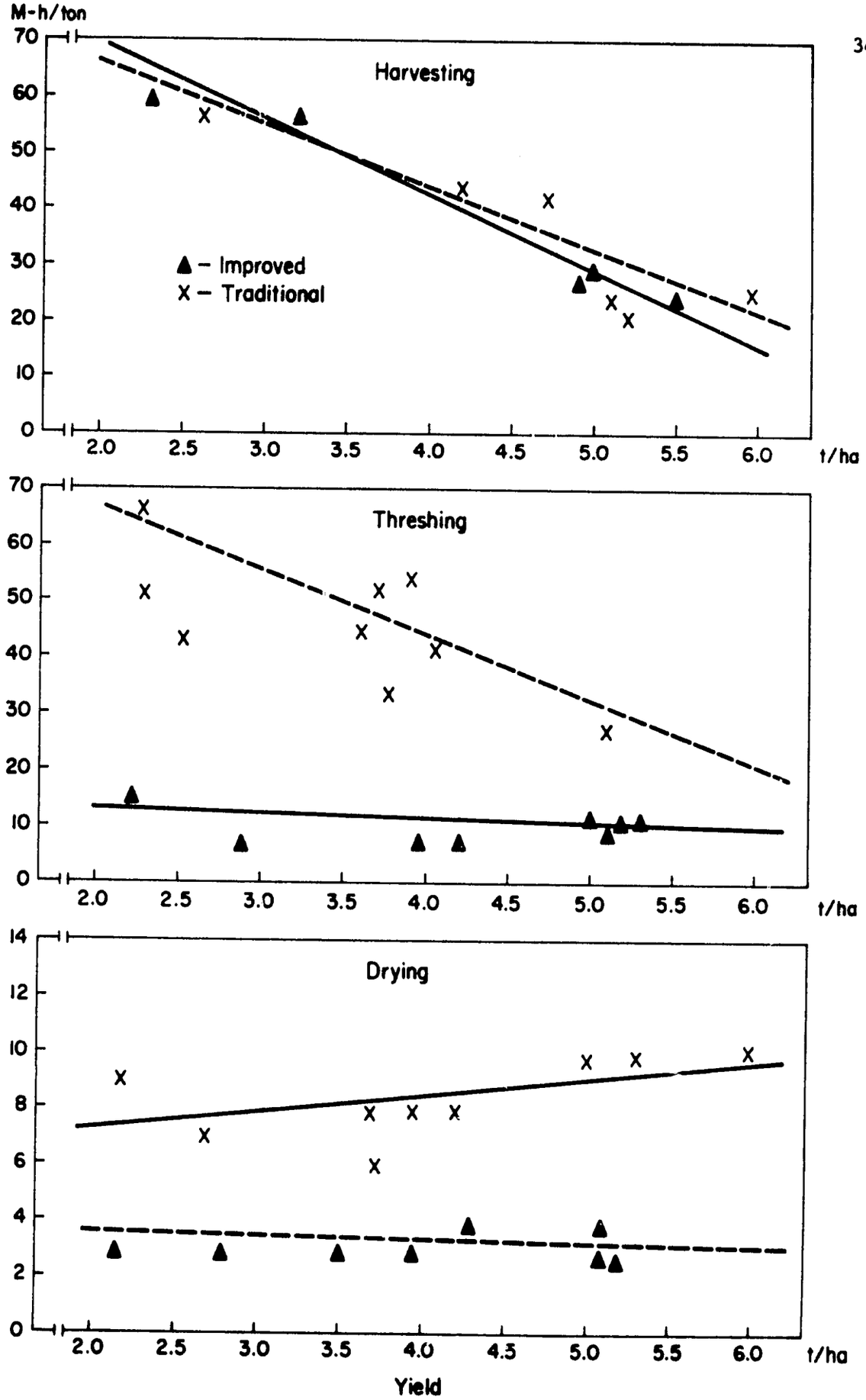

Figure 13. Relationship between labor inputs and yields by operation.

Improved method of drying shows a similar trend with the improved threshing. However, traditional drying indicated an increase in labor requirement per ton as the yield increases.

Harvesting. Harvesting includes cutting and placing paddy, gathering, bundling, hauling to the stacking area and stacking (Figs. 14 and 15).

Harvesting labor inputs for systems III and IV, which involved use of the mechanical thresher are often greater than those that utilized traditional methods of threshing -- systems I and II. For systems using mechanical threshing, the paddy must be moved to the roadside or levees, particularly during rainy days when the machine cannot be moved into the plots. In addition, stacks must be fairly large to efficiently utilize machine capacity. Conversely, in systems using traditional methods, paddy is not normally moved outside the plot or sometimes harvested paddy was gathered and threshed simultaneously and there is no need for stacks. The farmers normally gather paddy for threshing inside the plot, unless they use a centralized threshing system and stack it in an area away from the field.

Threshing. Labor for threshing includes threshing, cleaning, bagging and hauling of threshed paddy.[1/] Cleaning is normally performed with winnowing baskets, manually operated sieves or manually operated or engine-powered winnowing machines. Paddy that has been threshed manually usually passes through these cleaning methods. Some farmers who used the mechanical thresher required that grain be recleaned for higher purity to command higher prices. Table 10a also shows that with the improved technology in systems III and IV, total labor inputs for the threshing operation were reduced by 76% on a man-hours/t basis. Similarly, on a man-hours/ha basis, the average reduction in threshing labor requirements was 70%.

Besides reducing the labor requirement by using mechanical threshing, there is usually no requirement to reclean paddy since it is simultaneously threshed, cleaned and bagged, thus consolidating control over the final product. This system reduces pilferage losses noted with manual threshing and increases efficiency. Moreover, since mechanized threshing is usually more efficient and can be performed in a shorter period, the labor saved can be diverted to other productive activities. It also facilitates handling of nonshaterring varieties, which are a problem to farmers using manual threshing techniques. The mechanical thresher also handles high moisture paddy and lowers overall grain losses when used with adequate drying facilities.

[1/] Threshing is the separation of grain from the stalks and panicle.

Fig. 14. Hand sickle for manual harvesting and field bundling prior to threshing.

Fig. 15. Field handling of untreshed paddy.

Fifty three percent of the farmers interviewed mentioned threshing problems (Table 11). Among those who encountered problems, unfavorable weather was the most important constraint to proper timing of the threshing operation. Availability of the threshing machine and the resulting delays in performing this operation was another problem. Other problems mentioned were field losses due to inefficient labor, wet paddy, and the lack and high price of labor.

For cleaning operations, 58% reported having had problems and unfavorable weather was the most commonly encountered. Unfavorable weather leads to wet paddy which is hard to clean.

Drying. The labor requirements for drying prior to storage include paddy handling and management following threshing until the paddy is ready for storage. Mechanical drying reduces drying labor inputs by 63% on a per ton basis and 62% on a per hectare basis compared to sun drying (Table 10a). Tables 10b and 10c show the labor requirement by operation for each of the four field trials on a per hectare and per ton basis, respectively. Table 10b shows the labor requirements per ton based on unadjusted yields by operation. These findings clearly indicate significant reductions in labor requirement as improved technology is incorporated in the system.

Many farmers showed a preference for the mechanical dryer but felt the high initial cost put the machine beyond the reach of the ordinary farmer. Other drawbacks were the high operational and maintenance costs, particularly the rising price of fuel. Farmers indicated considerable interest in the machine's efficiency and the low labor requirement. Lack of drying space and the potential for deterioration of paddy harvested during rainy periods were other important advantages cited for expanded use of a mechanical dryer.

The mechanical dryer also improves head rice recovery compared to sun dried paddy. This finding is illustrated by the results of a laboratory analysis of paddy samples shown in Table 12.

Similarly, milling recovery is improved using improved technology. However, these cannot be fully attributed to the improved drying technique since there is a combination of other technologies in the threshing operations.

The most common drying problem encountered by farmers was unfavorable weather (Table 13). Another problem mentioned was inadequate drying facilities and the need for direct supervision to prevent losses and ensure effective drying. These problems are solved by using a mechanical dryer.

Table 10b. Labor requirement per hectare in alternative postproduction systems by operation in three pilot areas, Bicol River Basin area, 1976-77.

Site/operation/season	Alternative Postproduction Systems [a]			
	I	II	III	IV
	man-hours/ha			
Libon - Dry				
Harvesting	197	188	195	138
Threshing	165	162	32	31
Drying	30	12	35	13
All operations	392	362	262	182
Libon - Wet				
Harvesting	146	153	178	141
Threshing	118	109	36	33
Drying	20	8	19	6
All operations	284	270	233	180
San Jose - Dry				
Harvesting	109	126	166	151
Threshing	124	144	62	68
Drying	30	18	65	16
All operations	263	288	293	235
Buhi - Dry				
Harvesting	124	115	143	137
Threshing	194	210	52	65
Drying	22	15	52	16
All operations	340	340	247	218
All sites				
Harvesting	139	147	174	142
Threshing	151	158	45	49
Drying	27	14	47	14
All operations	317	319	266	205

[a] See footnote on Table 10a for description of systems.

Table 10c. Labor requirements per ton in alternative postproduction systems in 3 pilot areas, by operation, Bicol River Basin area, 1976-77.

Site/Operation/Season	Alternative postproduction system [a]			
	I	II	III	IV
	man-hours/t [b]			
Libon - Dry				
Harvesting	57 (48)[c]	64 (51)	55 (45)	42 (35)
Threshing	48 (40)	55 (44)	9 (7)	9 (8)
Drying	9 (7)	4 (3)	10 (8)	4 (3)
All operations	114 (96)	123 (99)	74 (61)	55 (46)
Libon - Wet				
Harvesting	77 (63)	69 (42)	71 (35)	87 (62)
Threshing	62 (50)	51 (31)	18 (9)	20 (15)
Drying	10 (9)	4 (2)	8 (4)	4 (3)
All operations	149(121)	124 (76)	97 (48)	111 (79)
San Jose - Dry				
Harvesting	34 (29)	29 (24)	39 (26)	35 (30)
Threshing	39 (33)	33 (28)	15 (10)	16 (13)
Drying	9 (8)	4 (4)	13 (8)	4 (3)
All operations	82 (69)	66 (56)	67 (44)	55 (46)
Buhi - Dry				
Harvesting	36 (32)	28 (26)	32 (28)	30 (26)
Threshing	56 (51)	52 (48)	12 (10)	14 (12)
Drying	6 (6)	4 (4)	11 (10)	4 (3)
All operations	98 (89)	84 (78)	55 (48)	48 (41)
All sites				
Harvesting	44 (37)	42 (34)	45 (33)	40 (33)
Threshing	47 (41)	46 (38)	12 (9)	14 (11)
Drying	8 (7)	4 (3)	11 (8)	4 (3)
All operations	99 (85)	92 (76)	68 (51)	58 (48)

[a] See footnote on Table 10a for description of systems.

[b] Based on final drying yield (kg) after adjusting to 14% MC and to purity.

[c] Figures in parentheses are man-hours/t based on yield unadjusted to % MC and purity.

Table 11. Problems in threshing and cleaning encountered by farmers in the Bicol River Basin area, 1976-77.

Item	No.	%
Threshing:		
Farmers reporting no problem	65	47
Farmers reporting problems	72	53
Problems:		
Unfavorable weather	31	38
Field losses due to inefficient laborers	12	15
Availability of the threshing machine causing delays	14	17
Wet paddy is hard to thresh/poor quality of paddy	11	13
Lack of available labor	11	13
Other minor reasons	3	4
Total [a]	82	100
Cleaning:		
Farmers reporting no problem	57	42
Farmers reporting problems	80	58
Problems:		
Unfavorable weather	48	49
Wet paddy hard to clean	47	48
Lack of sacks, laborers	3	3
Total [a]	98	100

[a] Some respondents gave more than one reasons.

Table 12. Quality characteristics of paddy samples by alternative postproduction systems, Bicol River Basin area, 1976-77.

Item	CROP CUTTING	THRESHING		DRYING			
		Traditional	Improved	Manual thresh/ sun dry	Manual thresh/ mech'l dry	Mech'l thresh/ sun dry	Mech'l thresh mech'l dry
	n = 60	n = 62	n = 68	n = 15	n = 16	n = 14	n = 16
				% values a/			
Cracked kernels b/	2.9	3.8	2.9	3.2	3.1	3.3	3.5
Damaged kernels c/	1.7	1.6	1.7	1.5	2.0	2.5	2.5
Milling recovery	68.4	67.7	67.9	68.1	67.4	67.2	68.1
Head rice recovery d/	82.3^{ab}	80.3^{abc}	79.3^{bc}	79.6^{abc}	80.6^{abc}	74.2^{c}	85.0^{a}
Broken rice e/	16.2^{bc}	18.2^{bc}	18.9^{ab}	18.8^{abc}	17.5^{bc}	23.9^{a}	13.3^{c}

a/ Means in each row with the same letter are not significantly different using Duncan Multiple Range Test at .05 level of significance.

b/ Cracked kernels refer to paddy which upon removal of the husk exhibit a crack or broken kernel.

c/ Damaged kernels refer to yellowish milled rice damaged by fermentation or heat and/or by water, insects or mechanical means.

d/ Head rice is milled rice which is at least 3/4 the size of the whole kernel. $\% \text{ HR recovery} = \frac{\text{wt of head rice}}{\text{wt of milled rice}} \times 100$

e/ Broken rice is milled rice whose size ranges less than 3/4 to 1/4 of a whole grain.

Table 13. Problems in drying by farmers in the Bicol River Basin area, 1976-77.

Item	No.	%
Farmers reporting no problems	25	18
Farmers reporting problems	112	82
Problems:		
Unfavorable weather	107	79
Inadequate drying facilities	18	13
Needs supervision	11	8
Total [a]	136	100

[a] Some respondents gave more than one problem.

QUANTITATIVE GRAIN LOSSES

Grain losses incurred from the time the paddy is harvested until it is stacked are called harvest losses. An attempt was made to measure the relative magnitudes of these losses as well as the threshing losses. All grains within the 2 m^2 sampling frame that had fallen on the ground or that had been left standing by harvesters were collected and weighed. These measurements were replicated two or more times for each plot. Unfortunately, recurrent rains and flooded fields made it impossible to fully implement this loss assessment method at all sites, and the data gathered were limited. Stacking losses were measured by placing underlays under each stack. Some farmers thresh directly from stacks, which again limited the effectiveness of this approach. Table 14 shows the level of harvesting and threshing losses measured from each system. Harvesting losses did not vary much for each system. However, stacking losses for the improved systems (systems III and IV) were greater than the traditional systems (systems I and II). The reason was the bigger stacks necessary for the efficient utilization of the mechanical thresher for the improved system. However, during the threshing operation, the loss incurred in traditional systems was much greater than that in the improved systems which proves the efficiency of mechanized threshing. The total losses for improved and traditional systems showed a 22% difference.

Table 15 illustrates the effect of elapsed time on yield and losses. For both systems I and II, in which traditional threshing was used, there was an elapsed period of only 1 day from harvesting to threshing. This stems from the farmer's desire to complete all operations rapidly. Longer time gaps were often found between threshing and drying, which is attributable to problems of unfavorable weather, lack of drying facilities, and others.

With a total elapsed time of 5 days from harvesting to drying for both systems I and II, the corresponding total yield decreases were greater, 19 and 20%, respectively.[1/] In contrast, systems III and IV, which used the mechanical thresher, had lower elapsed periods and yields were higher. The overall yield decreases for systems III and IV were much lower, 10 and 14%, respectively.

1/ Observations from 150 plots.

Table 14. Comparative grain loss incurred from harvesting to threshing operations between traditional[a] and improved[b] methods, Bicol River Basin area, 1976-77.[c]

	Traditional	Improved
Harvesting	2.86	2.72
Stacking	0.21	0.41
Threshing	1.56	0.48
Total	4.63	3.61

[a] Traditional systems (or systems I & II) involve the use of traditional method of threshing paddy.

[b] Improved systems (or systems III & IV) involve the use of mechanical thresher.

[c] Observations taken from 150 plots.

Table 15. Relationship between elapsed time from harvesting to drying, grain yield, and % losses for alternative postproduction systems, Bicol River Basin area, 1976-77.

	System [a]			
	I	II	III	IV
			Elapsed time (days)	
Harvest to thresh	1	1	2	1
Thresh to dry	4	3	2	2
Harvest to dry[b]	5	5	4	3
			Yield (t/ha)[c]	
Harvesting	4.2	4.4	4.4	4.2
Threshing	3.6	3.7	4.2	3.8
Drying	3.4	3.5	4.0	3.6
			% Losses	
Harvest to thresh	14	16	5	10
Thresh to dry	5	4	5	4
Harvest to dry	19	20	10	14

[a] See footnote on Table 10a for description of systems.

[b] Includes elapsed time within the drying operation until the paddy is dried to 14% MC.

[c] Final paddy weight after drying to 14% MC and adjusting to purity.

QUALITATIVE GRAIN LOSSES

Paddy samples were collected for all operations in each system and analyzed in the laboratory. Cropcutting samples from systems I to IV were analyzed regardless of system, while the threshing samples were grouped into two, i.e., traditional systems for systems I and II, and improved systems for systems III and IV, and for drying samples, analysis was done by system to see the effect of each combination of technology employed in each system on paddy quality.

The results in Table 16 show that the incidence of cracked kernels at the threshing stage in system I which employed manual threshing is significantly greater than in system IV which used mechanical threshing. However, no significant differences were noted when comparing cracked kernels at the cropcutting, threshing, and drying stages for all systems.

Head rice recovery decreased significantly from cropcutting to drying in system III which employed mechanical threshing and sundrying. However, comparing the latter with system IV which used mechanical threshing and mechanical drying, a significantly greater head rice recovery was seen with system IV. Broken rice from the cropcutting samples, when compared with that of drying at system III increased considerably, while when the latter was compared with that of system IV drying, there was also a significant difference illustrated. Drying at system II against drying at system III also varied significantly (see Table 12).

All these findings show the importance of mechanizing the postproduction operations in minimization of qualitative losses.

Qualitative losses also occur when delays result in the crop being left in the open field and subjected to adverse environmental conditions. Table 17 indicated that the traiditonal system (system I) which has a total elapsed time of 5 days from harvesting to drying, gave a somewhat lower head rice recovery of 79.4% compared to the improved system with recovery of 84.1% with a total elapsed time of 3 days. These differences do not however, appear to be statistically significant.

ECONOMIC ANALYSIS

Two sets of cost estimates for each postproduction system in each pilot area were computed based on actual labor used during the field trials. Also included were fuel and fixed capital costs for machines used in some systems, e.g., the mechanical thresher and the mechanical dryer.

One set of cost data was calculated using the prevailing contract rates for labor for harvesting and threshing operations. Labor was paid a fixed percent of the gross output. A second set of calculations was based on the observed labor used in each operation with an imputed wage rate of $1.35/8-hourday.

Table 16. Quality characteristics of paddy samples by alternative post-production systems, Bicol River Basin area, 1976-77.

Criteria	System [a]			
	I	II	III	IV
	% value [b]			
Cracked kernels	4.12	3.00	3.06	3.36
Damaged kernels	1.39	2.08	1.97	1.66
Brown rice	74.78	74.88	74.92	74.64
Milled rice	67.98	68.34	67.95	68.62
Head rice	79.45	80.26	80.25	84.09
Broken rice	19.07	18.08	18.73	14.50

[a] See footnote on Table 10a for description of systems.

[b] Results taken from the laboratory analysis of the 251 paddy samples collected during the field trials. (Averages for all postharvest operations).

Table 17. Relationships between elapsed time from harvesting to drying and milling recovery for alternative postproduction systems, Bicol River Basin area, 1976-77.

System [a]	Elapsed time (h → d)	Milling recovery [b]	Head rice recovery [b]
	(days)	(%)	(%)
I	5	68.0	79.4
II	5	68.3	80.3
III	4	68.0	80.2
IV	3	68.6	84.1

[a] See footnote on Table 10a for description of systems.

[b] Based on laboratory analysis of 400 samples taken at time of each postproduction operation. (Averages for all postproduction operations: crop cutting, harvesting, threshing, cleaning, and drying).

Cost estimates based on contract labor. The usual practice in the Bicol area is for the same people to do both harvesting and threshing. They are normally paid in kind at rates ranging from 10% to 16.7% of the gross output. The average was 13.33% for the three pilot areas.

Table 18 shows that introduction of both the mechanical thresher and the mechanical dryers (system IV), increased total cash costs, which included fuel and lubricants, depreciation, interest on capital, and repair and maintenance from $0.00 to $8.38/t compared to system I, which did not utilize mechanized methods. Noncash costs were reduced by more than 50% from $21.22/t to $10.03/t, using the mechanical system. However, the total costs for the two systems did not differ appreciably due primarily to the high cost of fuel which increased the cost of the mechanized system. The same table also indicates that system III, a combination of mechanical threshing and sun-drying, had the lowest total cost per ton.

The trends for individual pilot areas differ due to variations in yields and the fees for harvesting/threshing using contract labor. Buhi farmers paid the highest rate among the three areas at 16.66% of the gross production, while Libon farmers paid an average of 11.76% and San Jose 12.5% (Appendix tables 1-4). The wet season field trials in Libon gave abnormal results-- bad weather during the harvest season caused low yields. Another factor was a delay in the implementation of the experiment, which limited the choice of farmer-cooperators to those who were harvesting late.

Cost estimates based on actual labor inputs. For three pilot areas, harvesting costs averaged to $7.17/t (Table 19). For threshing operations however, the average labor cost for the traditional method (systems I & II) was almost 4 times greater than for systems III and IV, which were mechanized. Although labor costs for drying were reduced significantly in systems II & IV, use of the mechanical dryer increased total costs appreciably. System III, a combination of mechanical threshing and sun drying, had the lowest total cost/ton for each postproduction operation amounting to only $13.07/t. System IV gave a slightly higher total cost/ton because of fuel consumed in drying.

The same general cost behavior was observed among the three pilot areas with the exception of the wet season trial in Libon, which had the lowest yield and the highest labor requirement per ton for each operation (Appendix tables 5-8).

Estimated cost and returns. These estimates embody the effect of losses incurred for all postproduction operations in each system. Losses were deducted from the total returns. The analyses were based on the contractual labor rates for harvesting and threshing operations in systems I and II and actual labor inputs imputed at $1.35/8-hourday for systems III and IV (Tables 20 and 21).

Table 18. Estimated costs for alternate postproduction systems based on contractual labor inputs, Bicol River Basin area, 1976-77.

Item	System [a] I	II	III	IV
		$/t [b]		
HARVESTING EXPENSES				
Cash [c]	[e]	[e]	-	-
Non-cash [d]	-	-	7.17	7.17
THRESHING EXPENSES				
Cash	-	-	2.08	2.08
Non-cash	19.61	19.61	2.21	2.21
DRYING EXPENSES				
Cash	-	6.30	-	6.30
Non-cash	1.61	0.65	1.61	0.65
TOTAL EXPENSES				
Cash	-	6.30	2.08	8.38
Non-cash	21.22	20.26	10.99	10.03
TOTAL	21.22	26.56	13.07	18.41

[a] See footnote on Table 10a for description of systems.

[b] Based on exchange rate of ₱7.40/US$1.

[c] Cash cost includes cost of fuel and oil, depreciation, interest on capital investment and repair and maintenance.

[d] Non-cash cost includes cost of labor usually paid in kind.

[e] Included in threshing fee.

Table 19. Estimated costs for alternate postproduction systems based on actual labor inputs, Bicol River Basin area, 1976-77.

Item	System [a] I	II	III	IV
		$/t [b]		
HARVESTING EXPENSES				
Cash[c]	-	-	-	-
Non-cash[d]	7.17	7.17	7.17	7.17
THRESHING EXPENSES				
Cash	-	-	2.08	2.08
Non-cash	7.91	7.91	2.21	2.21
DRYING EXPENSES				
Cash	-	6.30	-	6.30
Non-cash	1.61	0.65	1.61	0.65
TOTAL EXPENSES				
Cash	-	6.30	2.08	8.38
Non-cash	16.69	15.73	10.99	10.03
TOTAL	16.69	22.03	13.07	18.41

[a] See footnote on Table 10a for description of systems.

[b] Based on exchange rate of P7.40/US$1.

[c] Cash cost includes cost of fuel and oil, depreciation, interest on capital investment and repair and maintenance.

[d] Non [illegible] cost includes cost of labor usually paid in kind.

Table 20. Estimated cost and returns for alternate postproduction systems based on contractual labor, Bicol River Basin area, 1976-77.

Item	System [a] I	II	III	IV
	$/t[b]			
All sites				
Returns	120.41	118.92	133.79	127.84
Costs	21.22	26.56	13.07	18.41
Net Returns	99.19	92.36	120.72	109.43
Libon-dry				
Returns	121.89	93.65	121.89	110.00
Costs	19.04	24.44	14.06	19.46
Net Returns	102.85	69.2[illegible]	107.83	90.54
Libon-wet				
Returns	139.73	138.24	130.81	123.38
Costs	18.73	24.07	19.83	25.17
Net Returns	121.00	114.17	110.98	98.21
San Jose				
Returns	124.87	120.41	121.89	121.89
Costs	19.78	24.96	12.25	17.43
Net Returns	105.09	95.45	109.64	104.46
Buhi				
Returns	105.54	110.00	138.24	129.33
Costs	26.21	31.69	11.00	16.48
Net Returns	79.33	78.31	127.24	112.85

[a] See footnote Table 10a for description of systems.

[b] Based on exchange rate of P7.40/US$1.

Note:

Returns have been adjusted to reflect the quantity of paddy recovered after deducting grain loss incurred for each system at each project site. Price of paddy was at P1.00/kg or $0.14/kg.

Cost estimates for the first two postproduction systems have been based on the contractual payment for the harvesting and threshing operation.

Table 21. Estimated cost and returns for alternate postproduction systems, based on actual labor inputs, Bicol River Basin area, 1976-77.

Item	System [a] I	II	III	IV
	$/t [b]			
All sites				
Returns	120.41	118.92	133.79	127.84
Costs	16.69	22.03	13.07	18.41
Net Returns	103.72	96.89	120.72	109.43
Libon-dry				
Returns	121.89	93.65	121.89	110.00
Costs	18.96	24.36	14.06	19.46
Net Returns	102.93	69.29	107.83	90.54
Libon-wet				
Returns	139.73	138.24	130.81	123.38
Costs	23.99	29.33	19.83	25.17
Net Returns	115.74	108.91	110.98	98.21
San Jose				
Returns	124.87	120.41	121.89	121.89
Costs	13.73	18.91	12.25	17.43
Net Returns	111.14	101.50	109.64	104.46
Buhi				
Returns	105.54	110.00	138.24	129.33
Costs	15.88	21.36	11.00	16.48
Net Returns	89.66	88.64	127.24	112.85

[a] See footnote on Table 10a for description of systems.

[b] Based on exchange rate of ₱7.40/US$1.

Note:

Returns have been adjusted to reflect the quantity of paddy recovered after deducting grain loss incurred for each system at each project site. Price of paddy was at ₱1.00/kg or $0.14/kg.

Cost estimates for the first two postproduction systems have been based on the amount of labor required to perform each operation with an imputed wage of ₱1.25/hour ($0.17/hour) which was the prevailing wage rate in the area.

Based on the actual labor inputs for all sites, system III gave the highest net return at $120.72/t, followed by system IV with $109.43/t. System II had the lowest with only $96.89/t despite the lowest loss among the four systems. The low net return was due to the high cost of the combined postproduction operations.

Similar patterns were observed in two pilot areas, Libon, dry season and Buhi with system III giving the highest net return per ton. The lowest net return per ton in Buhi, Libon dry season and San Jose was for system II. During the dry season field trial in Libon, system I gave the second highest net return per ton and system IV was third.

Using actual labor inputs with an imputed wage of $1.35/h-hourday showed identical results with those based on contractual labor arrangement. System III gave the highest net return per ton, except for the wet season trial. System IV was second and system II had the lowest return.

There is a strong indication from these results that introduction of improved technology in the postproduction operations can increase net returns. The high cost of fuel which raises operating costs for mechanical systems was discouraging to farmers, particularly for the mechanical dryer.

Cost of mechanical threshing. Under the terms of the purchase agreement, each farmers' association was to acquire and use an axial flow thresher. The machines were employed for the experimental field systems trials, but were also contracted to members of the community at a set fee, usually 5 to 6% of the crop. Monitoring of the threshers (Fig. 16) indicated that farmers were eager to use them. Analysis of those systems that employed the machines indicated the machines ensured more timely threshing of the crop and helped to reduce field losses. There appeared to be no labor displacement problems associated with this technology.

There were frequent engine breakdowns, usually associated with mismanagement. Scheduling and collection of the threshing fee were also problems. Introduction of threshers or other machines through farmers' associations should be accompanied by training for operators and a management program for those responsible for programming and use of the machines. The present institutional arrangement provides little incentive for the manager or the association to promote use of the machine or to ensure that it is kept in good repair.

During the rainy season, the axial flow thresher exhibited mobility problems in traversing wet fields (Fig. 17). Even with a carabao available, it was often difficult or impossible to place the thresher directly in the rice paddy. This difficulty often necessitated hauling and stacking paddy on a levee or roadway that was accessible to the thresher. This procedure resulted in additional handling and higher field losses and increased

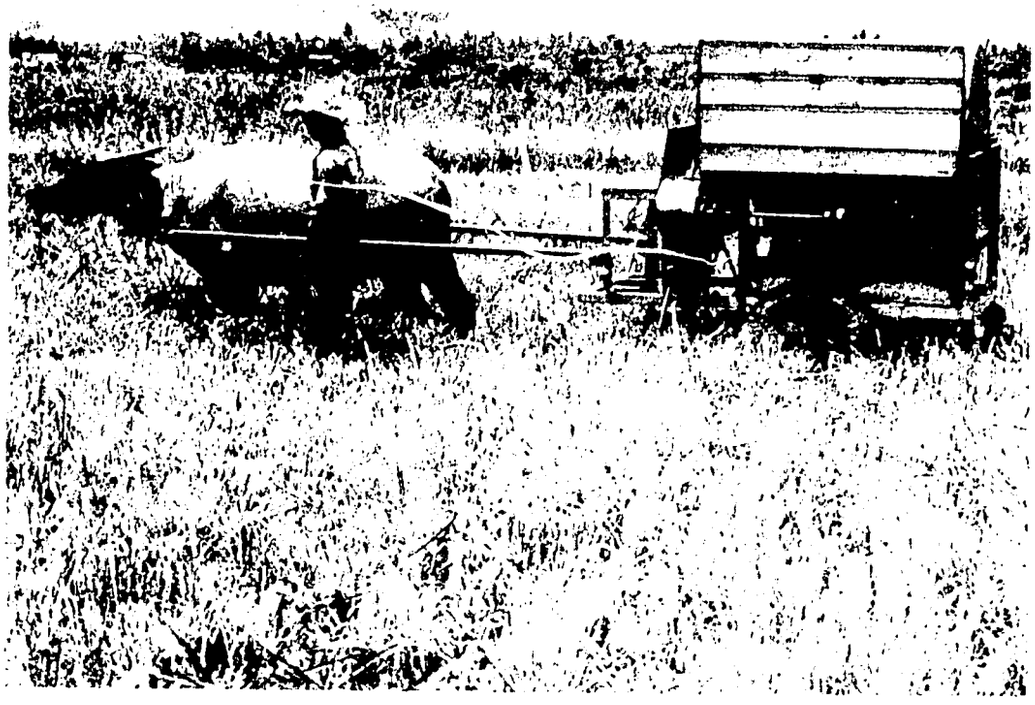

Fig. 16. Movement and use of Axial flow thresher.

Fig. 17. Mobility problems with axial flow thresher during wet season and use of portable axial flow thresher.

the amount of labor required to harvest the crop. Partially in response to this problem, the project introduced three portable threshers into the Buhi area. These machines appeared to provide much greater utility in terms of mobility without a significant sacrifice in performance.

The smaller threshers also required lower initial investments, were somewhat simpler to maintain, and permitted field threshing under most conditions. Comparative costs of both threshers are shown in Figure 18. The average total cost of each machine is shown at two initial investment levels. At current contract rates (6% of the crop), the axial flow machine must thresh 65 and 105 t/year for the high and low investment levels to be viable. In contrast, the portable unit must handle 36 and 47 t annually at the low and high cost levels. The low breakeven level for the portable thresher coupled with its convenience makes it an attractive investment for small farmers. Detailed budgets for the threshers are shown in Table 22.

Cost of mechanical drying. From the results of the farm systems trials, it was apparent that the mechanical dryers were not economical relative to the other systems evaluated. In the present project, there was no continuous inclement weather during the harvesting seasons that would have endangered the crops and made the dryers fully useful. With the alternative of solar energy for drying, farmers were not anxious to incur the additional expense of the dryer.

One difficulty with the twin bed batch dryer used in the project was the high investment and operational costs (Fig. 19). With the exception of paddy that was used for seed, there is almost no economic incentive to sell clean dry paddy. Well over half of the paddy sold in the three villages included in the project was not dried prior to sale. Most farmers indicated there was no monetary gain to drying unless paddy was to be retained for home consumption or storage.

The costs of three mechanical drying systems are shown in Figure 20 and Table 23. At low levels of annual use, the twin bed unit is the most costly alternative. A dryer using a vertical batch configuration (See Fig. 20) has recently become available that has both a low initial cost and high drying efficiency. The result is lower overall costs, higher capacity and a design that lends itself to local fabrication. To reduce costs further, alternative energy sources for heating are required. If cost of kerosene could be eliminated by using an alternative such as rice hull, the cost per ton could be reduced by as much as $2.43/t.

While reduction in costs would make dryers a more attractive investment, it would not necessarily stimulate their widespread adoption and use by small farmers. There are a number of hypotheses that need to be examined to determine the reasons for this reticence to use drying equipment. First, it appears there are no economic incentives to encourage farmers to dry

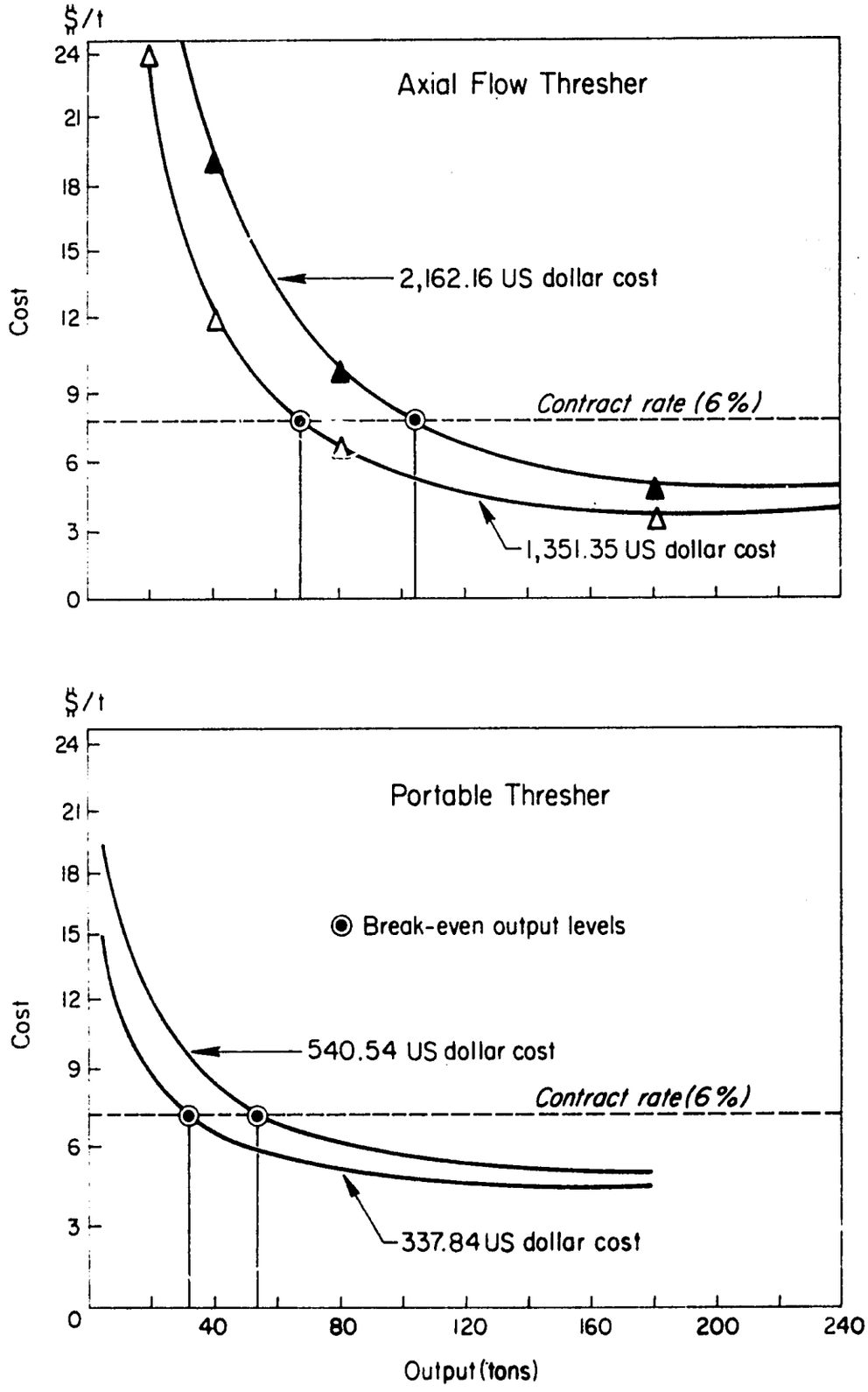

Figure 18. Average total costs for axial flow and portable threshers.

Source: Table 24

Table 22. Cost budgets for axial flow and portable threshers.

Item				
	Axial flow thresher US$			
Investment cost	1,351.35	1,621.62	1,891.89	2,162.16
Fixed costs				
Depreciation (6 yrs. life)	225.27	270.27	315.27	360.27
Repairs and maintenance (10%/yr)	135.14	162.16	189.19	216.22
Interest on investment (12%)	81.08	97.30	108.11	129.73
Total fixed cost ($/yr)	441.49	529.73	612.57	706.22
Variable cost ($/h)				
Gasoline (2.5 l/h x $0.23)	0.57	0.57	0.57	0.57
Grease (1 kg/mo. x $2.03)	0.01	0.01	0.01	0.01
Motor oil (1.3 l/wk. x 0.74)	0.03	0.03	0.03	0.03
Labor ($0.17/h x 4)	0.68	0.68	0.68	0.68
Total variable cost ($/h)	1.29	1.29	1.29	1.29
	Portable thresher			
Investment cost	337.84	405.41	472.97	540.54
Fixed costs				
Depreciation (6 yrs. life)	56.35	67.57	78.78	90.14
Repairs and maintenance (10%/yr)	33.78	40.54	47.30	54.05
Interest on investment (12%)	20.27	24.32	28.38	32.43
Total fixed cost ($/yr)	110.40	132.43	154.46	176.62
Variable cost ($/h)				
Gasoline (1.2 l/h x $0.23)	0.27	0.27	0.27	0.27
Grease and oil (0.5 kg/mo. x $2.03)	0.01	0.01	0.01	0.01
Motor oil (0.8 l/wk. x $0.74)	0.01	0.01	0.01	0.01
Labor (3 x $0.17/h)	0.51	0.51	0.51	0.51
Cleaning (2% x 400 x $0.14)	1.08	1.08	1.08	1.08
Total variable cost ($/h)	1.88	1.88	1.88	1.88

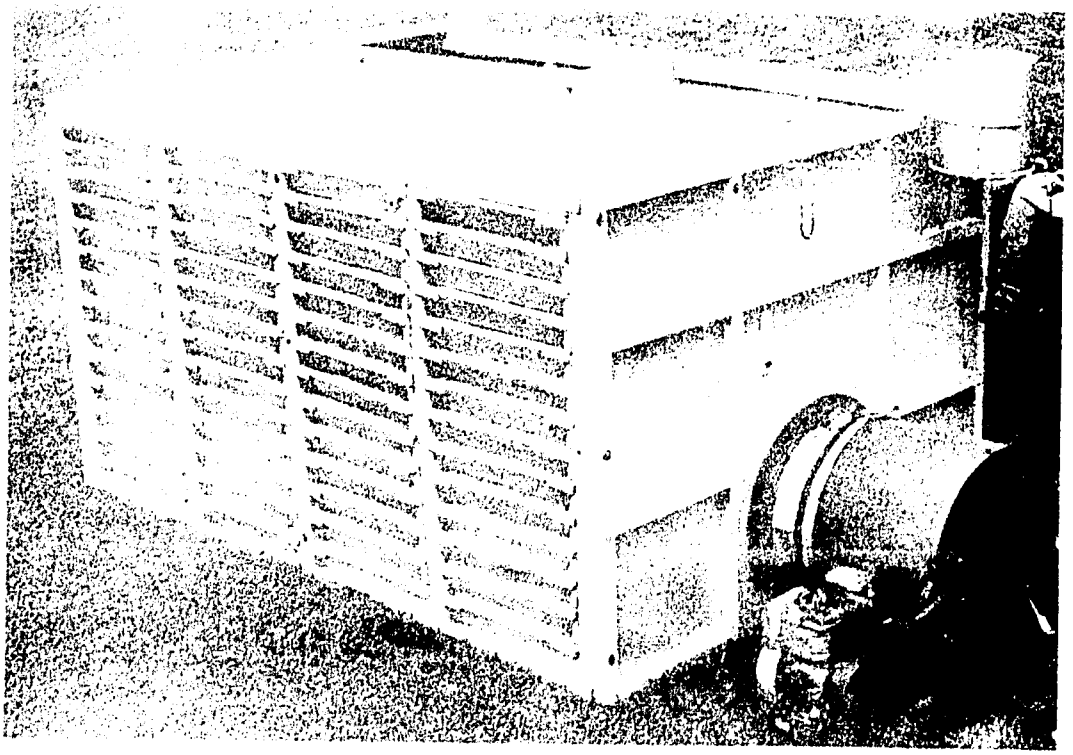

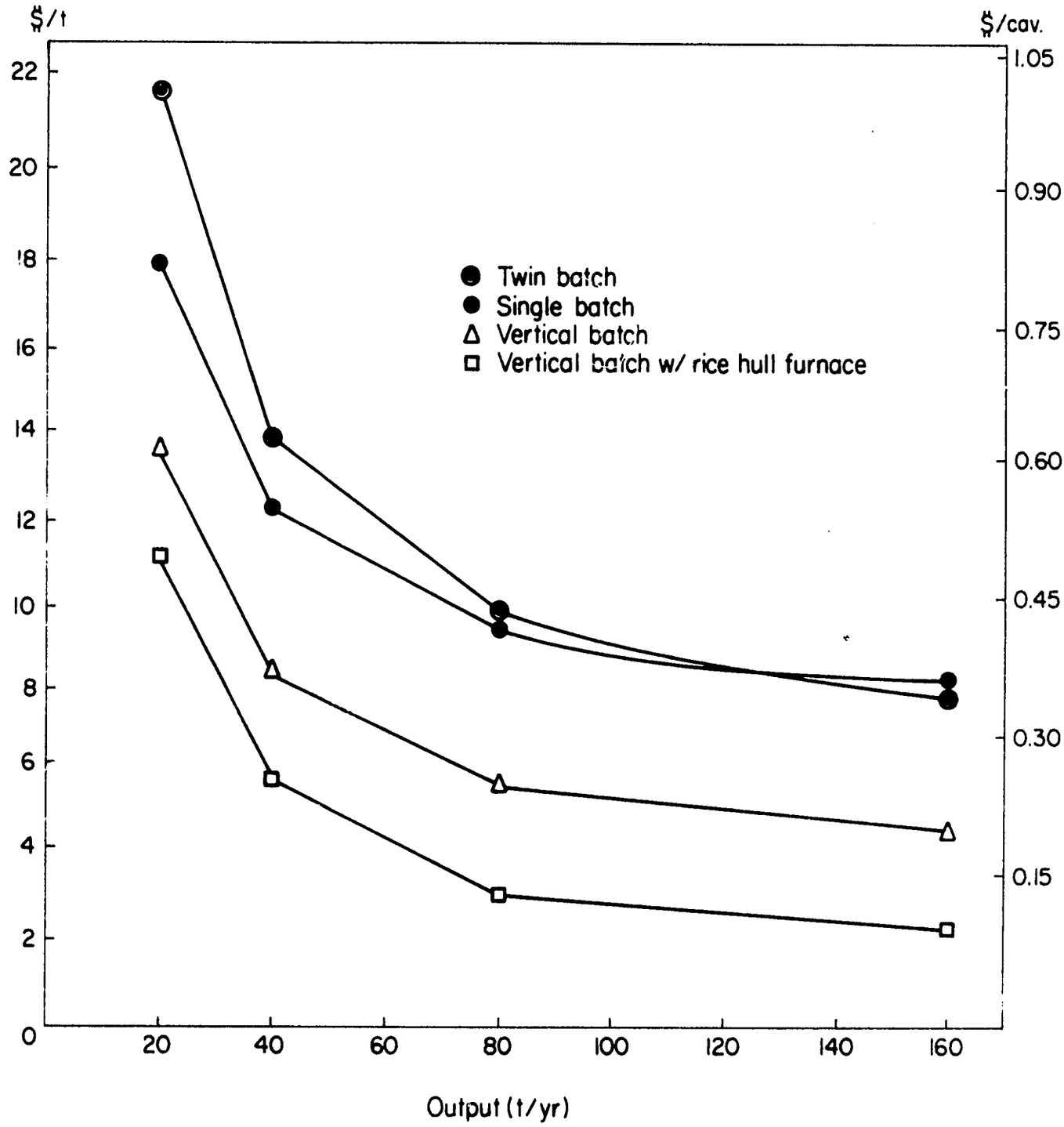

Figure 20. Average total cost to achieve a 12 percent moisture reduction with three alternative drying systems.

Table 23. Cost budgets for three batch drying systems.

Item	Single batch	Twin batch	Vertical batch
Investment cost ($)	810.81	1148.65	743.24
Fixed costs ($/yr)			
Depreciation (8 yr. life)	101.35	143.65	92.97
Repair and maintenance (10%/yr)	81.08	114.86	74.32
Interest on investment (12%)	48.65	68.92	36.49
Total fixed cost ($/yr)	231.08	327.43	203.78
Variable costs ($/h)			
Gasoline ($0.23/l)	0.29	0.29	0.29
Kerosene ($0.15/l)	0.33	0.33	0.33
Oil ($0.74/l)	0.01	0.01	0.01
Labor (2 men at $0.17/h)	0.34	0.34	0.34
Total variable cost ($/h)	0.97	0.97	0.97
Drying rate (% per h)	1.8	1.0	2.0
Capacity (tons)	1.0	2.0	2.0
Variable cost ($/t)			
to 14% from 26%	6.44	5.80	3.30
22%	4.29	3.86	2.20
18%	2.15	1.93	1.10

paddy. The lack of a clearly defined and easily administered set of grades and standards which rewards those who produce premium quality paddy is one possible explanation for this situation. Another is the lack of consumer preference for high quality milled rice.

A second possible reason that needs investigation is the low probability that a farmer will need a dryer under current cropping patterns. The probability of sustained inclement weather at harvest time resulting in crop loss may be so low that an individual rice producer finds it uneconomic to invest in drying equipment. Under these circumstances, it is likely the "social" benefits may be greater than the private benefits from having the dryer. It is conceivable that the public sector must assume the risks associated with an investment of this type before it will be widely utilized.

It is likely that as cropping intensity increases with additional irrigation in the Bicol Region and the wider use of shorter season, non-photoperiod sensitive varieties makes double cropping possible during the wet season, the risk of crop loss will increase and the benefits of drying equipment will become more evident.

FARM SURVEY SUMMARY

As farmers increase production, they can be expected to market a larger proportion of the marginal increment to output. While farmers will continue to retain up to 40% of their crop for home consumption, this proportion of the crop can be reduced if improved village level postproduction facilities are available toreduce losses. Farmers tend to place great utility in the steel huller mills located in the village because of their accessibility, ability to mill small lot sizes, production of by-products and strong institutional relationship between the mill owner and customers.

Farmers did not perceive any major problem with current postproduction systems, although lack of labor, unfavorable weather, and low paddy prices were frequently mentioned as constraints to proper timing of operations and high losses and low returns from paddy production. About one-third of the farmers harvested their crops late. Almost 40% of the 137 farmers interviewed were using mechanical threshing on their holdings, most of which were owned by contract operators. Many farmers felt this practice would increase as cropping intensity and yield increased. Many farmers sold their undried paddy immediately following harvest. They perceived little benefit from using improved drying facilities except during inclement weather and for production of good quality seeds. The principal reason for sale of wet material given were the lack of economic incentives for drying and the immediate need for cash following harvest. In instances where sun drying is used, public facilities such as basketball courts, highways and other concrete pavements are commonly employed as the drying surface.

FIELD TRIAL SUMMARY

The results from the experimental systems trials indicate there are several benefits from improvements in threshing and drying operations. Threshing equipment gave the greatest economic benefit in the four alternative systems evaluated in the trials. The introduction of the batch type dryer was not a viable alternative because of high costs and the lack of premiums for good quality paddy.

Shortening the time from harvest through drying produced higher yields and improved grain quality. Paddy quality did improve by using the machines. The number of damaged kernels, cracked kernels, etc. were relatively lower for the mechanized than for traditional systems.

Grain loss was significantly reduced with the introduction of the mechanical thresher. While it was difficult to judge the absolute level of the loss reduction, systems using the thresher performed relatively more efficiently than those using traditional methods. Use of the dryer also improved output by reducing losses, but to a lesser degree. The two machines operated in series produced the best results.

Mobility and mismanagement were problems with the axial flow thresher. Joint ownership and use of the machines by the farmers' associations were also not the most viable or efficient method of scheduling or use of the equipment.

Farmers are currently under few time constraints to complete harvest and plant a second crop. As this possibility becomes a reality with the introduction of additional irrigation facilities in the Bicol area, it will become imperative to reduce turnaround time between crops to maximize yields from both the first and the second crop. Shorter crop intervals will also increase the efficiency with which the irrigation water is used.

MILL LEVEL SURVEY TRIALS - TECHNICAL AND ECONOMIC EFFICIENCY.

Methodology

The mill level phase of the study was designed to assess the technical and economic efficiency of rice milling systems in the Bicol River Basin area. While the focus of these investigations is the small-scale village rice mill, an assessment of selected commercial mills was also included for comparison.

Four levels of empirical data collection were planned and implemented during the 1976 wet and 1977 dry periods: 1) a technical assessment of existing rice milling systems in the Bicol River Basin area, 2) a series of milling tests employing existing systems to mill paddy from alternative

farm level systems using a range of threshing and drying techniques, 3) a continuous monitoring schedule for rice mills included in the technical assessment study, and 4) engineering-economic study involving 39 steel hullers, [1] 14 cone types, [2] and 6 other milling systems.

TECHNICAL ASSESSMENT

Mill selection. In selecting sample cone type and steel huller mills for evaluation, the following criteria were used: 1) the mill must be within or near an area included in a concurrent farm level assessment of field practices,[3] 2) the milling system must be a type frequently used by farmers within the area, 3) the mill owner must be willing to cooperate and participate freely in the evaluation of his mill, 4) the mill must be strategically situated in an important rice growing area of the Bicol River Basin, and 5) the mill must be readily accessible.

The decision to select mills within areas included in the farm level study was necessary because paddy samples from these farming systems would be milled and evaluated in existing milling systems. Cooperation was essential because continuing monitoring would require close liaison with mill operators and owners over a relatively long period.

To inventory the existing rice milling technologies in the Bicol area, personnel from BRBDP and NGA [4] were interviewed, and some IRRI and UPLB [5] researchers were consulted. Eight milling systems were identified, and, the addition of the IRRI experimental single pass rice mill brought to the pilot area, nine systems [6] were evaluated (Table 24). Evaluation trials were conducted during the 1976 wet and 1977 dry seasons involving 14 cooperators (Table 27) in the towns of Bato, Buhi, Libmanan, Ocampo, and San Jose in Camarines Sur, and Libon and Polangui in Albay (Fig. 21).

1/ Steel huller rice mill is used here for the Engelberg type single pass rice mill unit.

2/ Cone type mill is used here for the conventional multipass rice mill with disc huller and whitening cones.

3/ Details and results of the farm level trials are contained in the Farm Level Survey and Field Trials.

4/ Bicol River Basin Development Program and National Grains Authority.

5/ University of the Philippines at Los Baños and International Rice Research Institute.

6/ See Appendix C for a description of the rice processing systems selected and evaluated.

Table 24. Alternative milling systems included in the technical assessment study, wet and dry seasons, Bicol River Basin area, 1976-77.

Systems	Precleaning	Huller	Husk aspiration	Whitening
I[a]	None	Steel huller	None	Steel huller
II[b]	Sieve	Stone disc	Air trap/aspirator	Abrasive
III[c]	Scalper-sieve	Rubber roll	Aspirator	Abrasive-friction
IV[d]	None	Rubber roll	Air trap	Friction
V[e]	Sieve	Stone disc	Air trap	Friction
VI[f]	None	Rubber roll	Aspirator	Friction
VII[g]	None	Steel huller	None	Steel huller
VIII[h]	None	Steel huller	None	Steel huller
IX[i]	None	Centrifugal	Air trap	Friction

a/ Steel huller rice mill unit ("kiskisan") or Engelberg type steel roll single pass rice mill unit.

b/ Cone type rice mill or conventional multipass rice mill with disc huller and whitening cones.

c/ Rubber roll multipass rice mill or Japanese type multipass rice mill with rubber roll huller and abrasive/friction whitener.

d/ Rubber roll-steel huller combination mill or a rubber roll huller/Engelberg type steel roll whitener rice mill combination.

e/ Stone disc-steel huller combination mill or a disc huller/Engelberg type steel roll whitener rice mill combination.

f/ Rubber roll single pass rice mill or Kyowa-Yanmar village type rubber roll huller/friction whitener rice mill combination.

g/ IRRI experimental single pass steel huller mill or the IRRI experimental steel roll single pass rice mill unit.

h/ Multiple steel huller rice mill unit or an Engelberg type steel roll whitener rice mill combination.

i/ Centrifugal huller rice mill unit or Sanriku village type centrifugal huller/friction whitener combination mill.

Table 25. Rice mills included in technical assessment study, wet and dry seasons, Bicol River Basin area, 1976-77.

Name	Type	Capacity[a] (paddy)
		Kg/hr
1. Bicol Seeds Rice Mill Bicol Seeds Inc. Libon, Albay	Rubber roll multi-pass	4200
2. Vales Rice Mill Napoleon Vales Ayugan, Ocampo Camarines Sur	Rubber roll single pass	245
3. Bucad Rice Mill Tomas Bucad Masoli, Bato Camarines Sur	Rubber roll-steel huller combination	315
4. Serrano Rice Mill Segundina Serrano San Juan, Polangui Albay	Stone disc-steel huller Combination	405
5. Moran Rice Mill R. Moran Matacon, Polangui Albay	Multiple steel huller mill	270
6. Libmanan Rice Mill Josefino Bulaong Libmanan, Camarines Sur	Cone	830
7. Concina Rice Mill Juan Asor Buklod, San Jose Camarines Sur	Cone	600
8. Gonzales Rice Mill Merle Ellorencio Matacon, Polangui Albay	Cone	240
9. Nazarrea Rice Mill Godofreda Nazarrea Buhi, Camarines Sur	Cone	240

	Name	Type	Capacity[a] (paddy)
			Kg/hr
10.	Dycoco Rice Mill Benjamin Dycoco Libon, Albay	Steel huller mill	390
11.	Olaño Rice Mill Antonio Olaño Sagrada, Buhi Camarines Sur	Steel huller mill	280
12.	Ruta Rice Mill Celestino Ruta Bigajo, Libmanan Camarines Sur	Steel huller mill	270
13.	Torres Rice Mill Gregorio Torres San Jose, Cam. Sur	Steel huller mill	520
14.	IRRI Single Pass Rice Mill IRRI, Ag. Engineering Los Baños, Laguna	Steel huller mill	105
15.	Procoma Rice Mill Buhi Procoma Buhi, Cam. Sur	Centrifugal huller mill	600

[a] Actual capacity.

BICOL RIVER BASIN DEVELOPMENT PROGRAM

IAD MAP

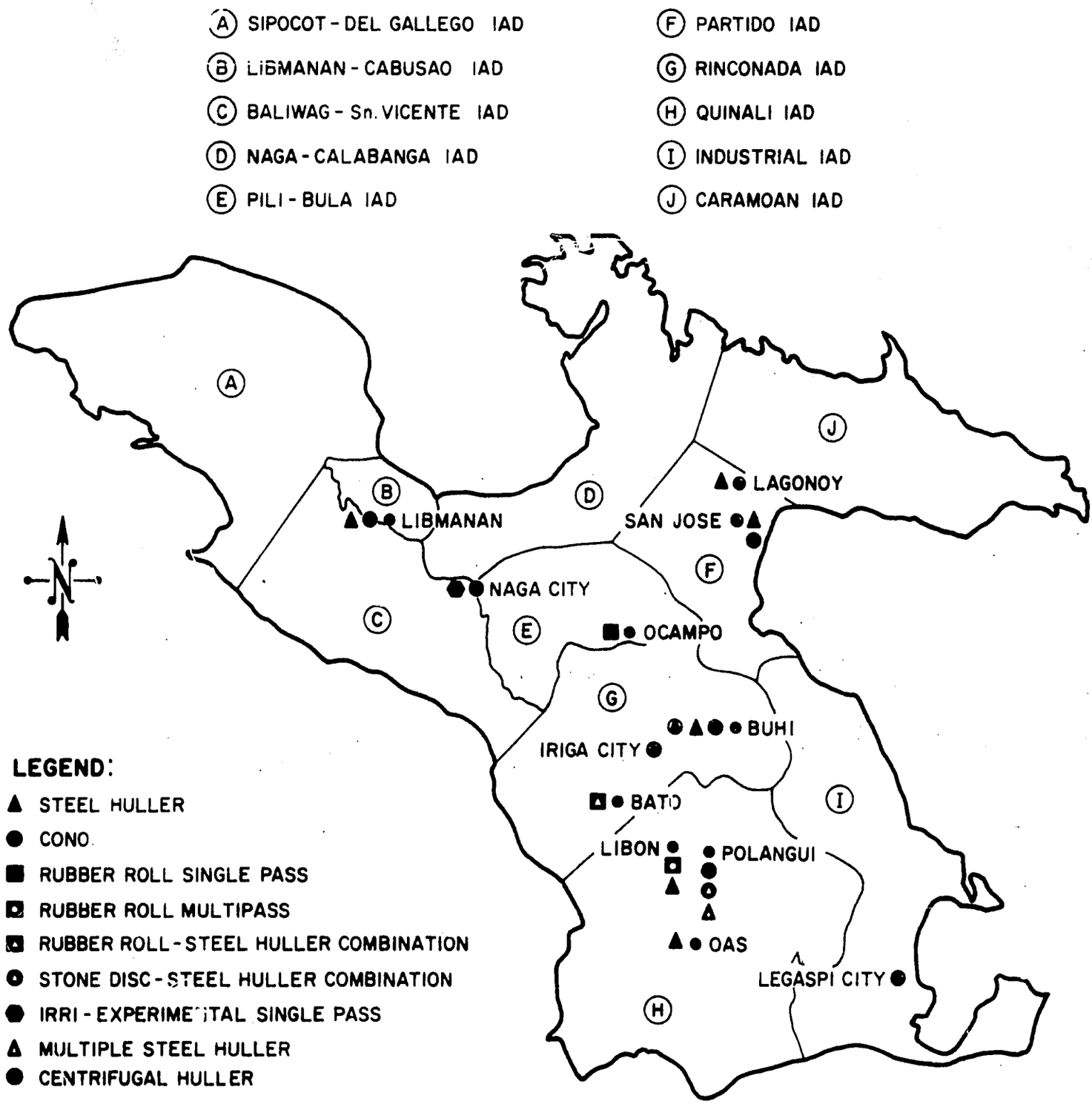

Figure 21. Location of nine alternative milling technologies included in the technical assessment and monitoring activities, Bicol River Basin, 1976-77.

Milling trials. To reduce experimental error, a homogenous 35 t fresh paddy of IR-36 variety was procured from a single rice producer, threshed with a single machine, dried under controlled conditions, and stored in plastic sacks. The sample was segregated into lot sizes (Table 26) large enough for replicated test runs through each milling system. Before initiation of the milling tests, a series of laboratory trials were made to determine the milling degree necessary to achieve second class milling. These tests were used to partially eliminate errors attributable to differences in the degree of milling from each milling system, i.e., to ensure that in actual trials, millers approximated as nearly as possible the degree of refinement in processing achieved in the laboratory.

During the milling trials, a flush sample was used to remove paddy from previous operations to make a preliminary assessment of the conditions at the mill, to charge the machinery, and to calibrate the equipment to ensure a prescribed degree of milling. In calibrating the mill, the milled rice sample processed in the laboratory was shown to mill operators and the mill was adjusted to approximate the same degree of processing as the laboratory sample. After the adjustments were completed, the test runs, replicated four times, were implemented and data were gathered. Samples were also gathered at different points in the milling systems (see Appendix C for grain flow and layout of different milling systems and points of sample collection) and were subsequently analyzed in the laboratory.[1/] Evaluation trials were conducted during the wet and dry seasons.

RESULTS AND DISCUSSION

In the technical assessment study, comparisons using total milling recovery, percent head grain and hulling efficiency were made among village and commercial mills. In addition, cross combinations between mills were also possible. The Duncan Multiple Range test was used to evaluate the existence of significant differences between treatment means.

Village level mills included in the assessment component of the study were 1) a rubber roll single pass rice mill, 2) a rubber roll-steel huller combination mill, 3) a stone disc-steel huller combination mill, 4) four steel huller mills, 5) a centrifugal huller mill, 6) the IRRI single pass experimental mill, and 7) a multiple unit steel huller mill (two steel huller mills operated in series). The commercial level mills included a ruber roll multipass rice mill unit and four cone type rice mills. The village level category was based on the following considerations: 1) that customers were primarily farmers or residents in the locale of the mill, 2) the milled rice produced was for home consumption 3) degree of simplicity of machine components, 4) low capacity,

---

1/ See Appendix C for a description of laboratory procedures used in the analysis of paddy and milled rice samples.

Table 26. Distribution of paddy sample (26 t)[a] used in the technical assessment of nine alternative milling systems, wet and dry seasons, Bicol River Basin area, 1976-77.

Milling system	Sample	
	Tons	%
Rubber roll single pass	1.03	3.95
Rubber roll multipass	9.24	35.57
Rubber roll-steel huller combination	1.03	3.95
Cone type		
Gonzales RM	2.46	9.40
Libmanan RM	3.00	11.50
Concina RM	2.26	8.69
Nazarrea RM	1.03	3.95
Steel huller		
Torres RM	1.03	3.95
Ruta RM	0.82	3.16
Olaño RM	0.92	3.55
Dycoco RM	0.92	3.55
Stone disc-steel huller combination	1.03	3.95
Multiple steel huller	0.72	2.76
IRRI experimental single pass steel huller	0.41	1.58
Centrifugal huller[b]	-	-

[a] Refers to dried paddy used for each season, IR 36 variety.

[b] Tested only during the dry season using 1.2 t of dried paddy.

5) could accomodate small paddy lot sizes for milling.

The commercial level mill differs from a village mill in the nature of customers (mostly businessmen and traders), they do not normally accept lot sizes of less than five bags, and the plant layout is relatively complex and has a relatively large capacity.

A final analysis of technical performance compared the cone type and the steel huller mill. Since cone type mills differ in the number and size of hulling units and the use of return hullers and husk aspiration systems, the four mills were also compared. A similar comparison was also made at the four steel huller mills.

Among the village mills, the rubber roll single pass mill, the rubber roll-steel huller combination and the centrifugal huller type mill provided the best performance with 70.31, 69.24, and 70.39% milling recovery, respectively (Table 29). Two steel huller mills, the Torres RM and Olaño RM at 68.74 and 67.62% milling recovery, respectively, were close, however, to the performance of the rubber hullers. The multiple steel huller mill was also significantly higher at 68.15% than the steel huller units.

Statistical analysis (see Table 27) showed that the rubber roll single pass, the centrifugal huller mill, and the rubber roll-steel huller combination with the exception of the Torres RM are significantly different from the rest, except the Torres RM, the multiple steel huller mill, and the Olaño RM.

Quantitatively, the steel huller mill as exemplified by two rice mills does compare favorably with the rice mills using rubber hullers under ideal conditions. The statistical test, indicates that the stone disc-steel huller mill combination does not perform as well as the rubber huller mills even though the system uses separate hulling and whitening components. The IRRI experimental single pass rice mill at 64.76% is classified with the rest of the less efficient village mills.

One qualitative measure in determining milling systems efficiency is percent head rice recovery. Rice mills using the rubber huller were higher than all village mills (Table 27). By rank, the first three positions belong to the centrifugal huller, rubber roll-steel huller combination, and the rubber roll single pass mill at 73.76, 71.25, and 62.51%, respectively.

Statistical analysis on milling recovery rates showed the centrifugal huller mill and the rubber roll-steel huller mill to be significantly higher than the rest of the mills except for the rubber roll single pass rice mill.

Table 27. Total milled and head rice recovery for nine milling systems, wet and dry seasons, Bicol River Basin area, 1976-77.[a]

Milling system	Milling recovery	Head rice	Broken rice[b]
		percent	
Rubber roll single pass	70.31[ab]	62.51[bc]	36.34
Rubber roll multipass	68.98[bc]	77.09[a]	22.37
Rubber roll-steel huller combination	69.24[bc]	71.25[ab]	28.02
Cone type (av.)	(69.00)	(75.76)	(23.26)
Concina RM	71.53[a]	75.55[a]	23.41
Gonzales RM	67.60[cde]	75.19[a]	23.67
Libmanan RM	70.63[ab]	76.75[a]	22.32
Nazarrea RM	66.25[efg]	75.55[a]	23.65
Steel huller (av.)	(66.23)	(41.70)	(56.40)
Dycoco RM	65.50[fg]	42.14[f]	56.78
Olaño RM	67.62[cde]	48.07[def]	49.83
Ruta RM	63.13[h]	31.96[g]	65.63
Torres RM	68.74[bcd]	44.66[ef]	53.36
Stone disc-steel huller combination	66.99[def]	55.40[cd]	41.36
Multiple steel huller	68.15[cde]	51.45[def]	46.48
IRRI experimental single pass steel huller	64.76[gh]	54.45[cde]	41.53
Centrifugal huller	70.33[ab]	73.76[a]	25.53

[a] See Appendix Tables 9 & 10 for separate results of the wet and dry season milling trials.

[b] Brewer's rice not included.

Note: Using the Duncan Multiple Range Test at 5% level of significance, treatment means with at least one common letter are not significantly different from each other.

Surprisingly, the stone disc-steel huller combination mill, and the IRRI experimental single pass rice mill compare with one of the rubber huller mills. The Torres RM and Olaño RM, the steel hullers with appreciably higher total milling recoveries, had much lower head rice rates at 44.66 and 48.07%, respectively.

The superiority of the rubber huller mills can be partially attributed to the use of separate hulling and whitening machines and a hulling unit made of rubber material, where its resiliency is an important factor in reducing grain breakage. The rubber roll mills have high hulling and wholeness coefficients (Table 28) and vary significantly from all other mills.

The operation of steel huller mills results in low head rice recoveries. Performance is better with the stone disc-steel huller combination although it does not compare with rubber roll mills. The low hulling coefficient for the stone disc at 0.51 (see Table 28) indicates that 49% of the paddy is unhulled and enters the whitening machine directly. Adjustment of the whitening machine must, therefore, be to hull the remaining paddy as well as to whiten the brown rice. The two processes are not wholly compatible and produce a combined hulling and whitening effect similar to the process of the steel huller mill. The multiple steel huller mill performs well (68.15% MR) but produces substandard quality with 51.45% head rice and is not comparable to the yields of the rubber roll systems.

The centrifugal huller mill is relatively new in the milling industry. The unit included in the study milled 600 kg of paddy per hour and has separate hulling and whitening components. At 70.49% MR and 73.00 HR (see Table 27), the mill is comparable to the rubber roll and cone type mills tested. This is one indication of the superiority of hulling units using rubber or other resilient materials. The hulling impeller, rotating at high speed, has polyvinyl chloride blades that throw grains tangentially against an impact lining attached to the periphery of the housing. Comparing the machine with the rubber roll type and cone type mills showed insignificant differences for both total milled and head rice recovery.

Although the performance of the centrifugal huller mill appears impressive, it remains doubtful if this machine would perform as well as the rubber roll mill under the wet season conditions. In the technical assessment trials, the relatively good performance of all mills was undoubtedly due to the high quality of the paddy used in the trials. Even the recoveries of steel huller mills were high, as shown in the Olaño and Torres rice mills with 70.55 and 71.28% MR, respectively. A series of monitoring activities of actual milling operations was designed to provide additional evidence pertaining to the dry season testing with the centrifugal and other milling systems.

The commercial level mills included one rubber roll multipass mill and four cone type rice mills. Table 27 indicates that two cone type mills,

Table 28. Hulling and wholeness coefficients and hulling efficiency for six alternative milling systems, wet and dry seasons, Bicol River Basin area, 1976-77.[a/]

Milling system	Hulling coefficient[b/]	Wholeness coefficient[b/]	Hulling efficiency[b/]
		percent	
Rubber roll single pass	.88	.94	82.49[a]
Rubber roll multipass	.78	.93	71.92[bc]
Rubber roll-steel huller combination	.87	.93	80.13[ab]
Cone type (ave.)	(.735)	(.877)	(64.45)
Concina RM	.72	.86	62.01[c]
Gonzales RM	.76	.84	64.01[c]
Libmanan RM	.70	.90	62.23[c]
Nazarrea RM	.76	.91	70.04[c]
Stone disc-steel huller combination	.51	.91	46.38[d]
Centrifugal huller	.95	.73	70.23[c]

a/ See Appendix Tables 11 and 12 for separate result of the wet and dry season milling trials.

b/ See Appendix C for definition.

Note: Using the Duncan Multiple Range test at 5% level of significance, treatment means with at least one common letter are not significantly different from each other.

the Concina RM and Libmanan RM, gave the highest recoveries at 71.53 and 70.63%, respectively. The rubber roll multipass mill at 68.98% did not show a statistically significant difference when compared to the two cone type mills. The remaining two cone type mills, the Gonzales RM and Nazarrea RM, produced significantly lower total rice than the two cone units mentioned previously. The rubber roll multipass mill did not vary significantly from the Gonzales RM. The Nazarrea RM was significantly lower than the rest of the mills.

Qualitatively, the commercial mills performed well. The five rice mills have similar head rice values. No statistically significant differences existed among them.

Summarizing the qualitative and quantitative results, the cone type mills compare technically with mills using rubber roll hullers. Although the cone type rice mill uses a stone disc huller, the coefficient of wholeness of well-operated stone disc hullers is comparable to that of rubber roll hullers (see Table 28). It is a common technique among cone type mill operators to widen the clearance between the rotating and stationary stone disc to minimize grain breakage but with a resulting low hulling coefficient. Both types employ multiple pass whitening, i.e., there are two or more passes of brown rice through the whitening machine using a method of gradual bran removal. With a relatively low hulling coefficient, the cone type rice mill must have large hulling capacity in order to absorb the return paddy and maintain total plant capacity.

From the tests on commercial and village mills using disaggregate operations of the hulling and whitening process, it is evident that multiple pass milling produces a higher head rice recovery, as exemplified by the rubber roll multipass mill and cone type rice mills (see Table 27). This is attributable to gradual bran removal using lower pressures inside the whitening machine. There is considerable difference when 6% bran is removed with two passes by removing 3% per pass than when a similar amount of bran is removed at a single pass.

Steel huller mills coupled with rubber roll hullers considerably increased milling yields both quantitatively and qualitatively (Fig 22). With the rubber roll-steel huller combination mill, the system remains simple without the need for a paddy separator. High hulling efficiency means that small amounts of unhulled grains and higher percentage of whole brown rice are processed during whitening. Although the head rice obtained is 6% lower than the best head rice yield produced by the rubber roll multipass mill, the results are not statistically different. When combined with a stone disc sheller, the results were less impressive. Because of its lower hulling efficiency, the stone disc system requires a paddy separator to remove unhulled paddy mixed with the brown rice.

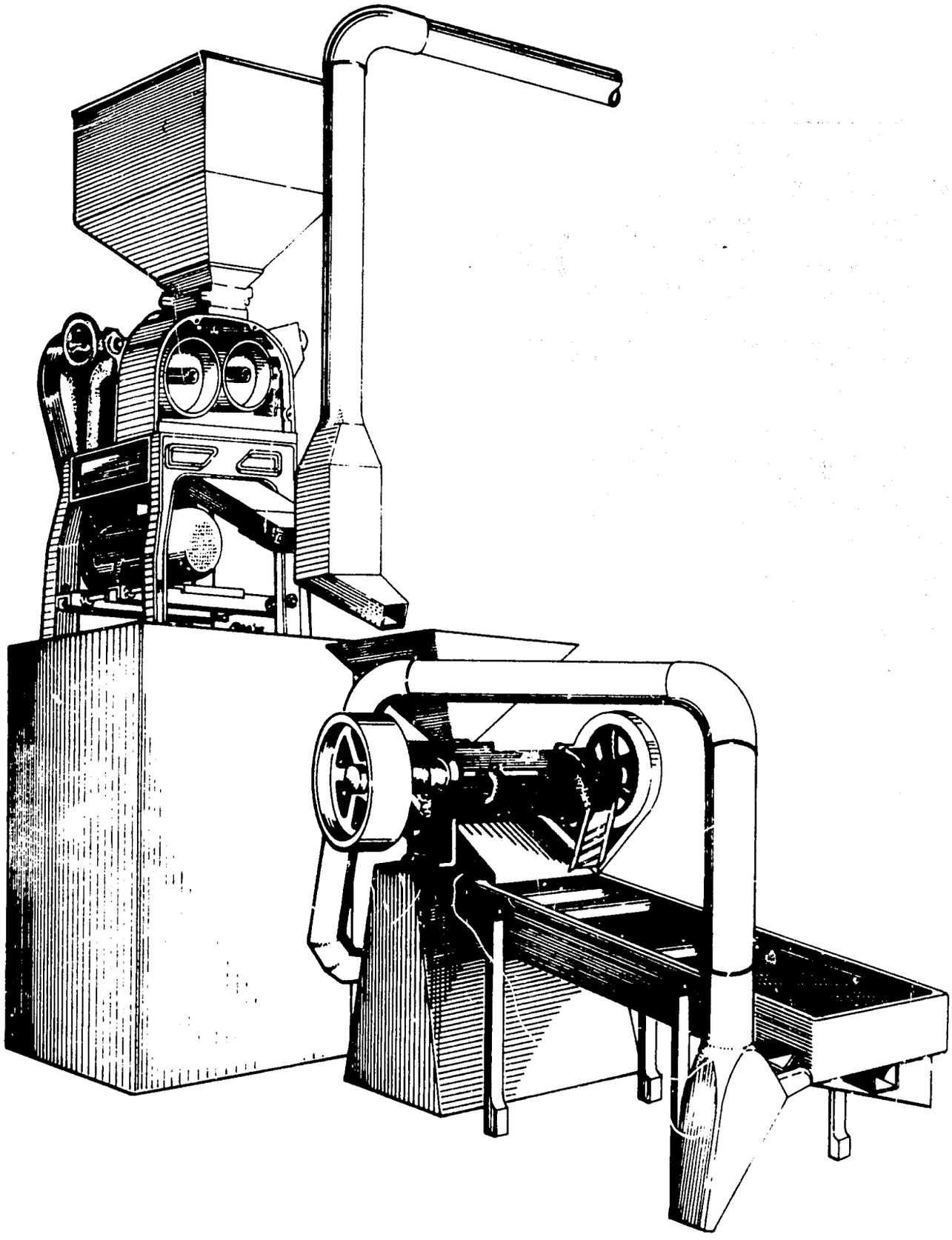

Figure 22. The rubber roll huller-engelberg type steel roll whitener rice mill combination.

Increasing the hulling coefficient to lessen the incidence of unhulled paddy tends to increase grain breakage, and it is necessary for stone disc hullers to be used in conjunction with paddy separators. An additional component means added cost, space, and power that renders the system less desirable for village operations. However, head rice was increased compared to steel huller mills.

MILLING PADDY FROM ALTERNATIVE FARM LEVEL SYSTEMS

METHODOLOGY

To determine the effects of premilling systems combining alternative techniques of harvesting, threshing, handling and drying on milling efficiency, paddy samples from a traditional and an improved farm level system[1/] were subjected to a series of trials using commercial milling systems operating in the Basin. These trials were confined to disc cone and steel huller mills in three pilot areas. Farm level system I used traditional farm practices for handling, threshing, and drying. System IV used improved threshing and drying technology. The milling test procedures used in the technical assessment study described earlier were applied in these milling tests.

RESULTS AND DISCUSSION

The milling samples gathered from the three pilot areas showed a significant difference between cone type and steel huller mills, both in total milled and head rice recoveries (Tables 29 and 30).

Mill performance is affected by the quality of paddy. An analysis of mill performance indicated that paddy from each location had a different effect on milling yield. Laboratory analysis showed that paddy from the Libon area had the lowest purity and highest incidence of immature kernels. In contrast, paddy harvested from the San Jose pilot area had the highest quality, which is also reflected in total milled and head rice recoveries.

The total milling recoveries obtained from farm level systems I and IV did not show significant differences. While data obtained from cone type mills using paddy from System IV showed the mechanical system higher than traditional methods, the data obtained from the steel huller were in contrast from those of the cone type. Head rice recovery rates, however,

---

1/ See section on Farm Level Survey and Field Trials.

Table 29. Milling recovery of cone type and steel huller mills as affected by alternate methods of handling, threshing, and drying in three pilot areas, Bicol River Basin area, 1976-77.

System[a]	Milling recovery							
	Cone type				Steel huller			
	San Jose	Buhi	Libon	All areas	San Jose	Buhi	Libon	All areas
	percent							
I	68.39	65.73	64.77	66.30	64.14	62.67	57.67	61.50
IV	69.34	66.11	65.53	66.99	63.46	60.09	58.55	60.70
Difference	0.95[b]	.38[b]	0.26[b]	0.69	0.68[b]	2.58[c]	0.88[b]	0.80
Average (by areas)	68.87	65.92	66.15	66.65	63.8	61.38	58.11	61.10

[a] See footnote of Table 10a for description of systems.

[b] Not significant at 5% level.

[c] Significant at 5% level.

Table 30. Head rice recovery of cone type and steel huller mills as affected by alternate method of handling, threshing and drying in three pilot areas, Bicol River Basin area, 1976-77.

System a/	Head rice recovery							
	Cone type				Steel huller			
	San Jose	Buhi	Libon	All areas	San Jose	Buhi	Libon	All areas
	percent							
I	85.19	71.69	71.92	76.27	37.75	34.49	26.99	33.08
IV	86.49	78.88	79.13	81.50	40.85	34.68	47.44	40.99
Difference	1.30 b/	7.19 c/	7.21 c/	5.23	3.1 b/	.19 b/	20.45 c/	7.91
Average (by areas)	85.84	75.29	75.53	78.89	39.30	34.59	37.22	37.04

a/ See footnote on Table 10a for description of systems.

b/ Not significant at 5% level.

c/ Significant at 5% level.

proved higher with the improved farm level techniques than from traditional field methods.

The above results suggest that better quality and higher milling yields can be achieved using improved field level threshing and drying technologies, although these results are most clearly evident in commercial milling technologies in contrast to village level mills. The findings are similar to those of the technical assessment study, in which the steel huller mills were found to be less efficient. The greatest benefit from improved farm level postproduction systems will be realized when these are used in conjunction with improved milling systems.

MONITORING ACTIVITIES

METHODOLOGY

To measure milling efficiency with data that approximates actual conditions, the rice mills included in technical assessment study were continuously monitored for periods ranging from 6 months to 1 year. Paddy being processed during the monitoring period was not controlled, as were the samples used in the technical assessment component of the study. Daily records were kept of the variety, weight of raw paddy, and milled rice output. Weekly samples of paddy and milled rice for laboratory analysis were collected. The objective was to determine the quality and characteristics of the paddy entering the system as well as the use pattern of the processing system and the effect on milling yields. Table 31 describes the mills included in this activity.

RESULTS AND DISCUSSION

Mill utilization. Table 32 summarizes the monthly utilization of 12 rice mills in the monitoring schedule. Full utilization is 12 hours operation per day for 24 days per month. One year of milling data showed that one cone type mill (Libmanan RM) operated at a 97% utilization level (279 hours per month of the 288 hours full utilization). The rubber roll-steel huller combination had a high utilization level for a village mill. The other two cone type mills were low, as were the rubber roll single pass mill, the steel huller mills, the multiple steel huller mill, the stone disc-steel huller combination, and the centrifugal huller mill.

Underutilization of village mills can be attributed to the nature of their operations. Village mills service the households, which have smaller paddy lot sizes, requiring relatively short milling hours. From Figure 23, the peak utilization months for the village mills coincide with the harvesting months, while minimal operations occur during the

Table 31. Names and addresses of mills included in the milling system monitoring activity, Bicol River Basin area, 1976-77.

Milling system	Address
Steel huller	
Dycoco RM	Poblacion, Libon, Albay
Torres RM	Poblacion, San Jose, Camarines Sur
Olaño RM	Sagrada, Buhi, Camarines Sur
Rayala RM	Poblacion, Oas, Albay
Rubber roll single pass-- Vales RM	Ayugan, Ocampo, Camarines Sur
Rubber roll-steel huller combination-- Bucad RM	Masoli, Bato, Camarines Sur
Stone disc-steel huller combination-- Serrano RM	San Jose, Polangui, Albay
Centrifugal huller--Buhi Procoma RM	Buhi, Camarines Sur
Cone type	
Libmanan RM	Libmanan, Camarines Sur
Concina RM	Buklod, San Jose, Camarines Sur
Nazarrea RM	San Roque, Buhi, Camarines Sur

Table 32. Actual monthly utilization of monitored mills expressed as percentage of full capacity,[a] Bicol River Basin area, 1976-77.

Type and name of rice mill	Jan.	Feb.	Mar.	Apr.	May	June	July	Aug.	Sept.	Oct.	Nov.	Dec.	Av.
Steel huller (av.)	12	11	12	14	15	12	7	9	9	15	12	9	12
Dycoco RM	10	12	16	14	16	18	10	10	10	26	20	12	15
Torres RM	18	8	10	12	12	6	6	6	8	8	8	6	9
Olaño RM	16	16	14	24	24	18	6	14	10	18	14	12	16
Rayala RM	4	6	6	6	6	6	6	4	6	6	4	4	6
Rubber roll single pass -- Vales RM	14	26	22	22	18	22	34	34	38	28	20	24	25
Rubber roll-steel huller combination-- Bucad RM	66	76	76	76	76	62	146	76	52	88	44	80	77
Stone disc-steel huller combination-- Serrano RM	4	8	8	8	4	4	4	2	6	10	10	6	6
Multiple steel huller-- Moran RM	12	12	18	12	12	12	8	4	10	14	14	14	12
Centrifugal huller-- Buhi Procoma RM	2	4	6	6	6	4	4	4	4	12	6	4	6
Cone type (av.)	59	55	54	54	47	64	59	60	43	41	36	38	51
Libmanan RM	118	108	106	106	86	144	116	64	78	88	78	70	97
Concina RM	24	18	20	16	18	8	14	32	20	20	8	16	18
Nazarrea RM	34	38	36	40	38	40	46	84	32	16	22	28	38

[a] Percent monthly utilization = $\frac{\text{actual no. hours operating per month}}{\text{12 hours per day x 24 days per month}} \times 100$

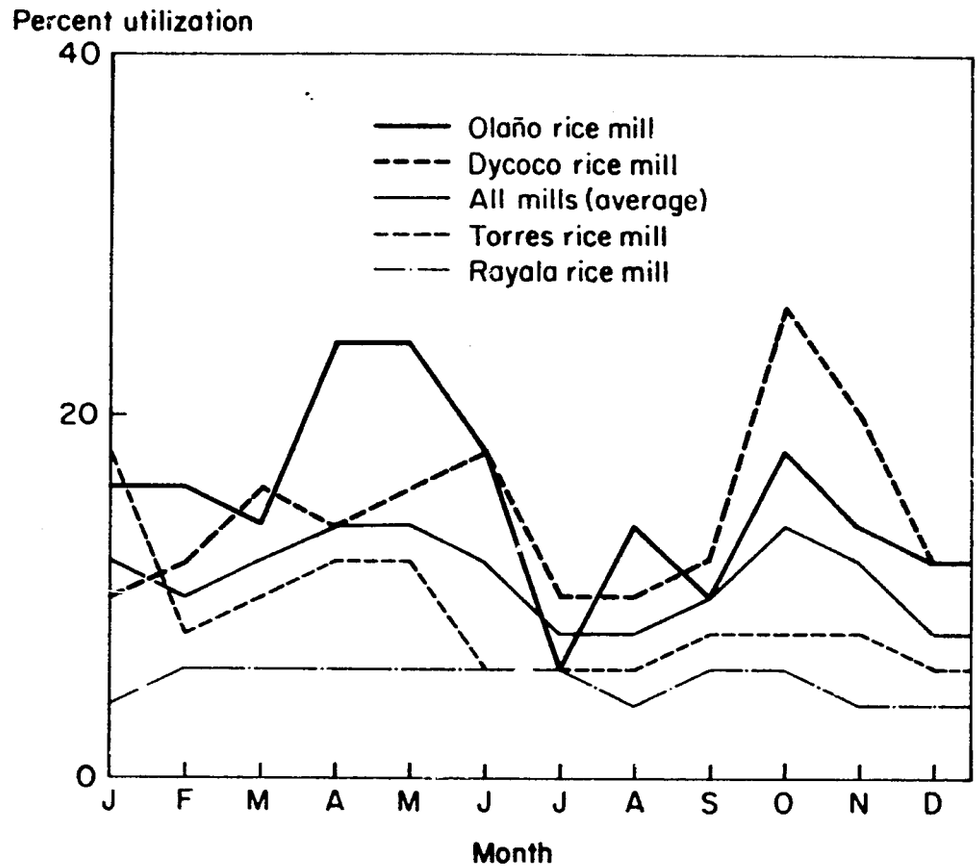

Figure 3. Actual utilization pattern of steel huller mills included in the monitoring schedule, Bicol River Basin area, 1976-77.

the nonharvesting periods. Village mill owners are not engaged in grain trading, and custom milling was the major source of the mill income.

The 1-year utilization level of the rubber roll-steel huller combination was considered exceptional (Fig. 24). The technical assessment study proved its high performance efficiency and is evidence of the popularity of the mill. Output was statistically comparable to cone type mills both in quantity and quality of milled rice. Grain retailers and households composed major customers for the mill. In addition, the mill owner was engaged in grain trading.

Cone type mills rely on traders as their main customers. The quantity of paddy is suited for longer milling runs. The survey noted that cone type mills are provided with warehousing and storage facilities that allow them to store paddy during harvest and mill during periods of scarce supply. Figure 25 illustrates this behavior. Peak milling months occur during nonharvesting months, which is caused by a higher demand for rice. The peak milling months for cone type mills were periods of lean milling operations for steel huller mills and fall on nonharvesting dates, June to August (Fig. 24).

Paddy and milled rice analysis. One hundred fifty paddy and 141 milled rice samples were collected and analyzed during the monitoring period. The moisture content of paddy samples ranges from 10.6 to 12.4% with a purity range of 96.1 to 98.8% (Table 33). Cracked kernels ranged from 3.9 to 9.9% and damaged kernels from 2.9 to 10.9%. Chalky and immature kernels ranged from 3.7 to 7.8%. Laboratory milling yields showed milled rice recovery rates of 65.4 to 67.7% with head rice recovery range of 74.9 to 85.1%. Grading of the paddy (Table 34, Fig. 26) showed that 61.3% of the total paddy gathered was of substandard quality and 70.66% was classified as low quality. Only 29.34% was graded as high quality with 1.33% considered a premium grade.

A linear regression analysis was used to examine the relationship between paddy characteristics and percent total milled and head rice. From Figure 27, a significant decrease in head rice recovery rates can be observed when the percentage of cracked kernels and moisture content increase. Paddy purity and damaged and immature kernels were found to affect head rice insignificantly. In contrast, Figure 28 illustrates that total milled rice recovery rates were significantly affected by purity of paddy and damaged and immature grains. Total milled rice recovery increases when purity is increased. A drop in total milled rice was observed when the incidence of damaged and immature grains increased.

Other paddy characteristics (see Table 33) did not show significant effects on total and head rice recovery rates.

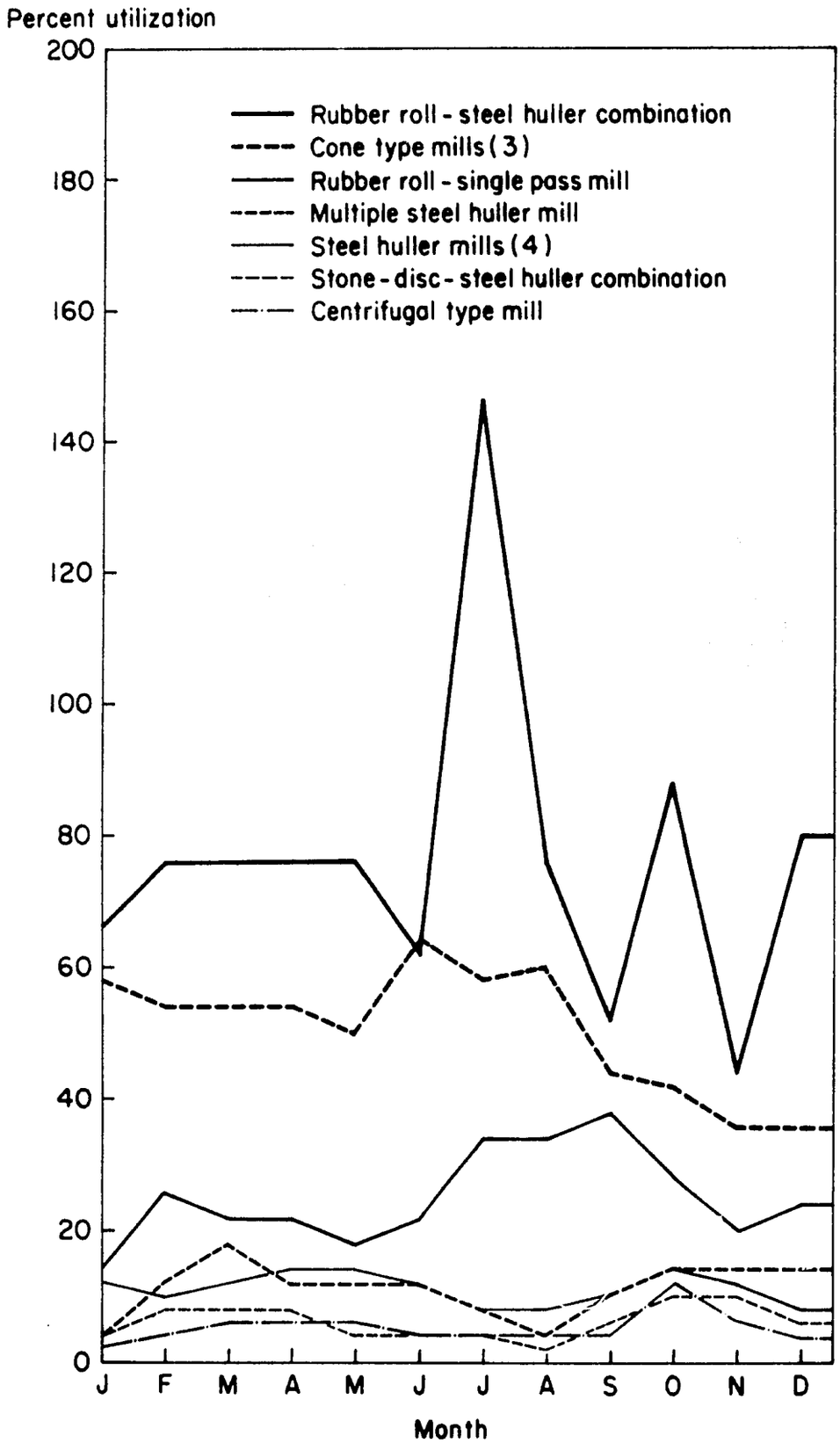

Figure 24. **Actual utilization pattern of mills included in the monitoring schedule, Bicol River Basin area, 1976-77.**

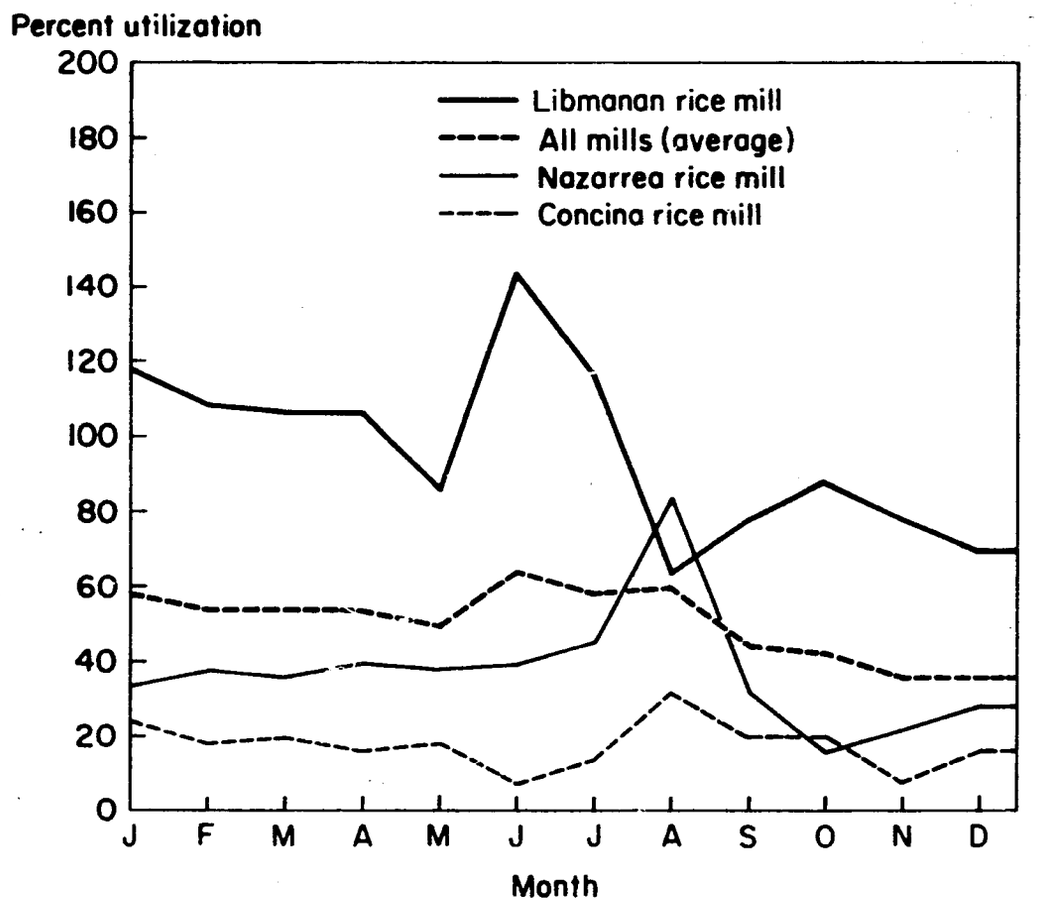

Figure 25. Actual utilization pattern of cone type mills included in the monitoring schedule, Bicol River Basin area, 1976-77.

Table 33. Characteristics of paddy samples collected during monitoring tour by milling system, Bicol River Basin area, 1976-77.

Milling system	Number of samples	Moisture content	Purity	Cracked kernels	Chalky & Immature	Damaged kernels	Other variety	Yellow & fermented kernels	Red rice	Brown rice recovery	Milled rice recovery	Head rice recove
						% values						
Steel huller	(74)											
Dycoco RM	28	12.0	96.6	4.8	4.1	6.8	b/	1.0	b/	76.6	67.2	77.5
Torres RM	8	11.5	96.9	8.1	5.2	4.1	0	1.6	5.0	77.7	67.1	74.9
Olaño RM	8	11.9	98.0	9.4	3.8	8.5	b/	2.9	b/	76.7	67.5	77.9
Rayala RM	29	10.7	96.2	5.8	4.6	6.0	b/	1.2	b/	76.8	66.6	84.9
Rubber roll single pass--												
Vales RM	12	12.2	98.0	5.0	4.2	5.3	b/	2.8	b/	76.0	67.7	84.4
Rubber roll-steel huller combination -- Bucad RM	12	12.3	95.9	5.8	6.1	6.1	0	1.7	b/	77.8	67.2	81.3
Stone disc-steel huller combination -- Serrano RM	10	10.6	95.5	4.3	5.8	10.9	b/	3.7	b/	76.3	65.4	85.1
Centrifugal huller -- Buhi Proccoma RM	10	12.4	98.8	7.3	3.7	3.3	b/	1.1	9.1	77.2	67.8	84.1
Cone type	(33)											
Libmanan RM	10	12.3	97.2	3.9	7.5	12.3	b/	2.2	1.2	76.5	66.5	84.1
Concina RM	8	11.6	96.5	4.4	7.8	3.1	0	3.0	0	78.1	67.7	81.6
Nazarrea RM	15	12.0	98.1	4.8	5.9	2.9	b/	2.4	b/	77.1	66.1	78.8
Total	150											

a/ Results from laboratory analysis of paddy samples collected during monitoring activities.

b/ Less than 1%.

Table 34. Distribution of paddy samples by milling system and grade, Bicol River Basin area, 1976-77.

Milling System	No. of samples	Grade: Premium No.	Premium %	1 No.	1 %	2 No.	2 %	3 No.	3 %	Substandard No.	Substandard %
Steel huller											
Dycoco RM	28	0	0	4	14	9	32	2	7	13	47
Torres RM	8	0	0	0	0	3	37	0	0	5	63
Olaño RM	8	0	0	2	25	1	12.5	1	12.5	4	50
Rayala RM	29	2	7	4	14	1	3	2	7	20	69
Rubber roll											
Single pass-- Vales RM	12	0	0	5	42	1	8	0	0	6	50
Rubber roll-steel huller combination-- Bucad RM	12	0	0	1	8	1	8	2	17	8	67
Stone disc-steel huller combination-- Serrano RM	10	0	0	0	0	1	10	0	0	9	90
Centrifugal huller-- Buhi Procoma RM	10	0	0	0	0	2	20	3	30	5	50
Cone type											
Libmanan RM	10	0	0	0	0	0	0	0	0	10	100
Concina RM	8	0	0	1	12.5	1	12.5	1	12.5	5	62.5
Nazarrea RM	15	0	0	1	7	4	26	1	20	7	47
Total	150	2	1.3	18	12	24	16	14	9.3	92	61.3

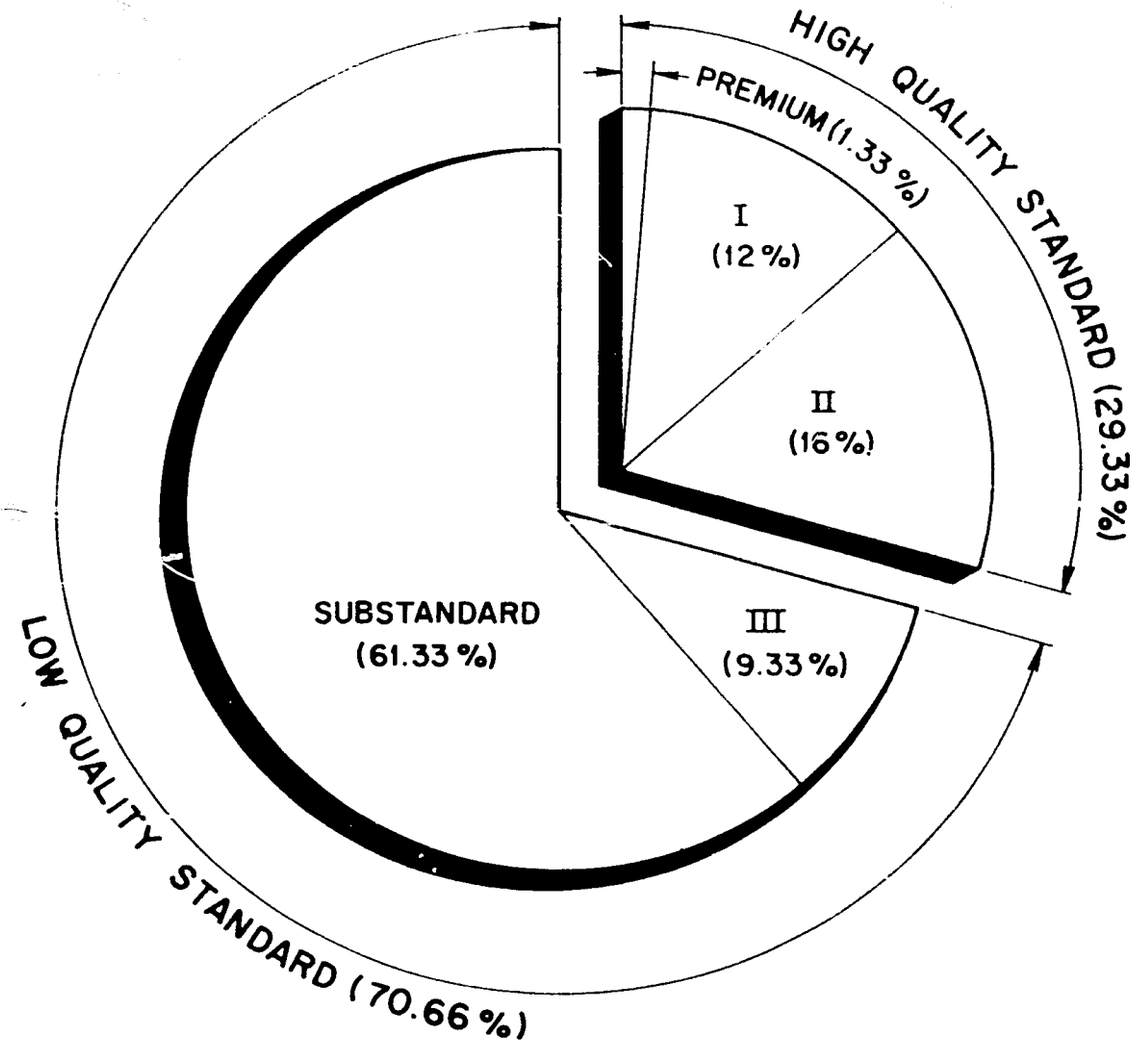

Figure 26. Results of paddy analysis, 150 samples collected from 11 rice mills, Bicol River Basin area, 1976.

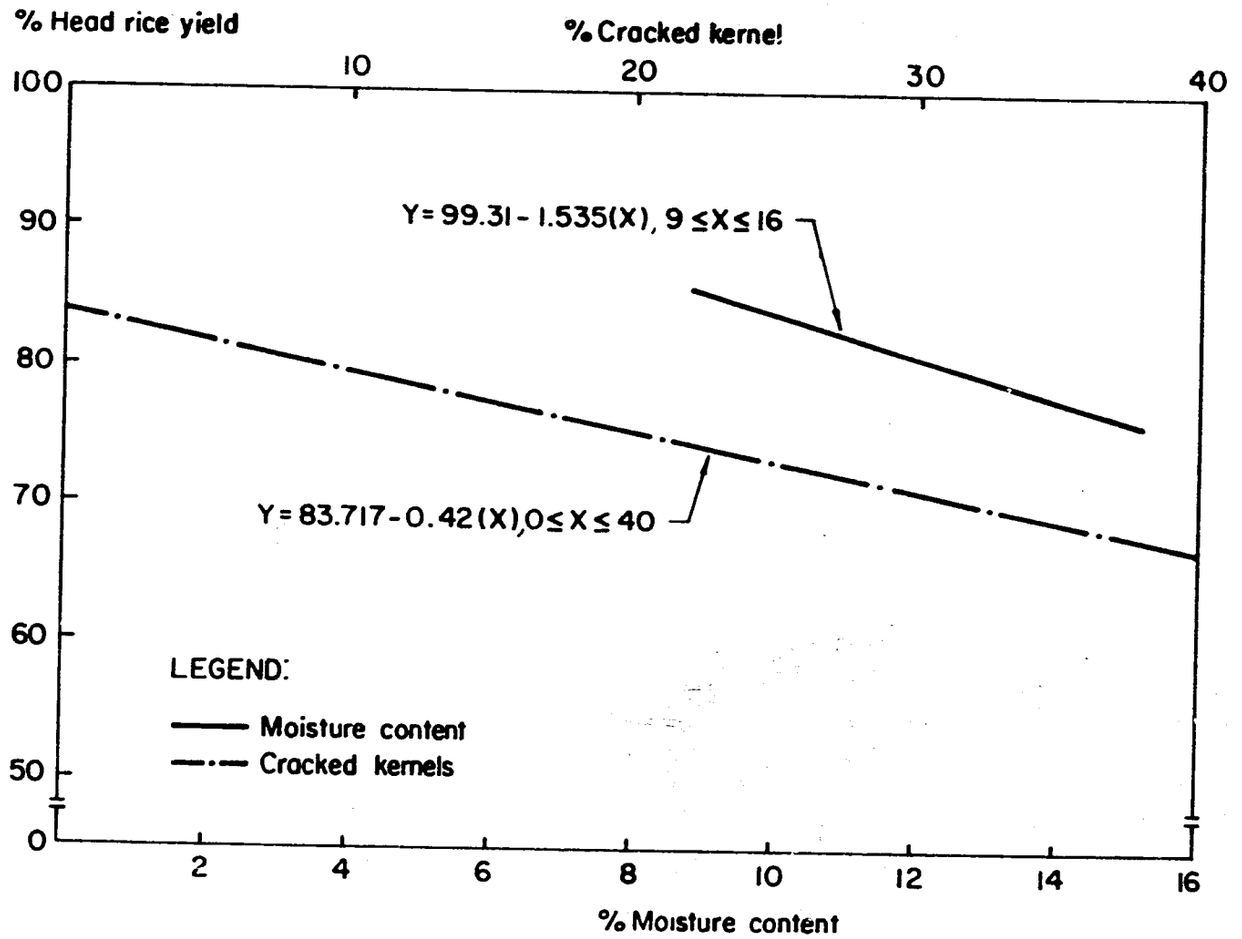

Figure 27. Effect of percent moisture content and cracked kernel on head rice yield, 150 paddy samples, Bicol River Basin area, 1976-77.

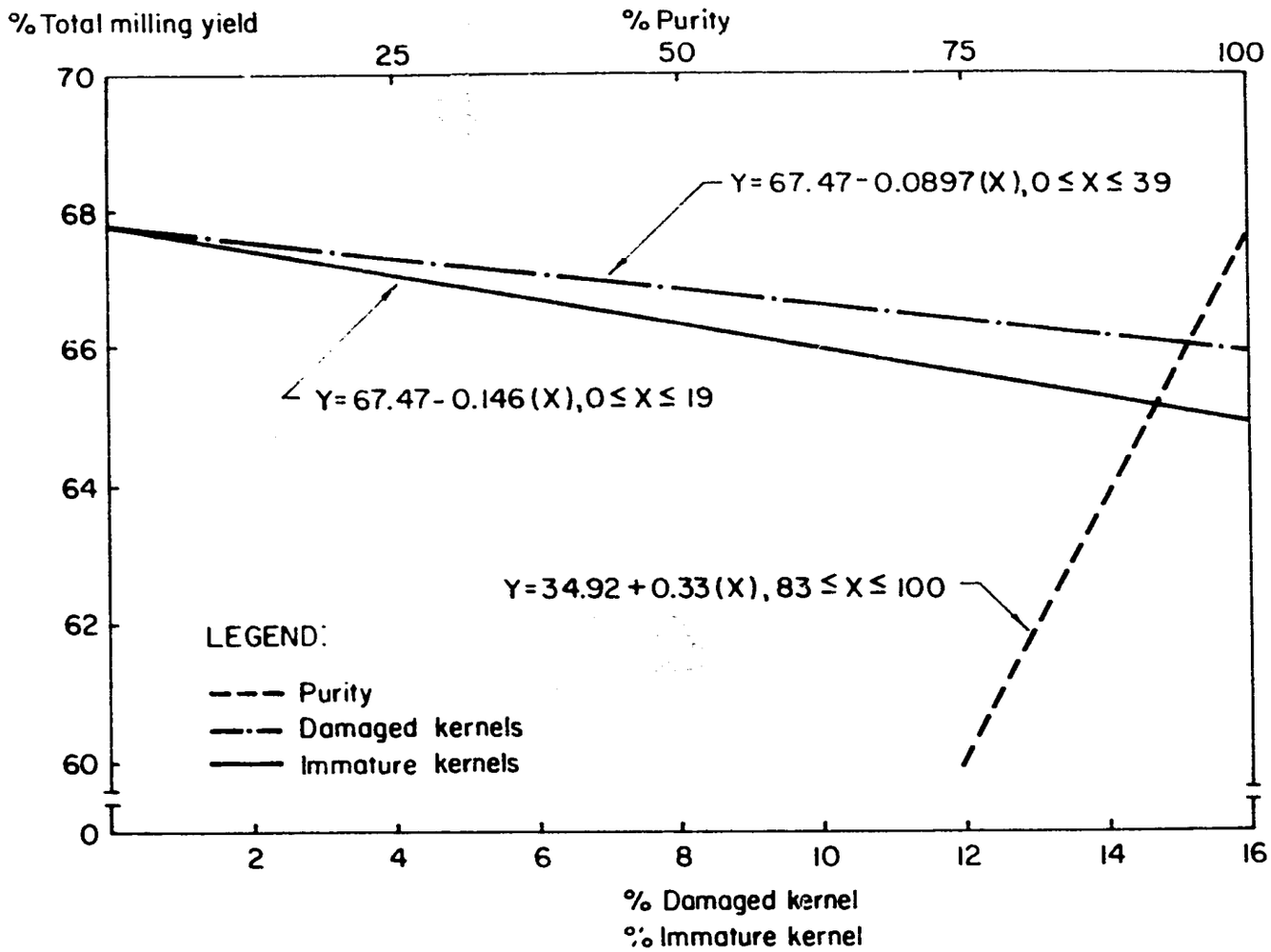

Figure 28. **Effect of paddy purity, damaged and immature kernels on total milling yield, 150 paddy samples, Bicol River Basin area, 1976-77.**

Milling quality tests (Table 35) for the cone type mill, rubber-roll-steel huller combination and rubber roll single pass mill produced grade II [1/] milled rice at 75.5, 70.9, and 70.5% head rice, respectively. With the exception of the centrifugal huller mill, all units monitored yields substandard quality milled rice (Fig. 29).

Statistical analysis of head rice yields by system (Table 35) showed that head rice yields from cone type mills differed significantly from the steel hullers and the stone disc-steel huller combination mills. However, the rubber roll single pass, the rubber roll-steel huller combination, and the centrifugal huller mill do not differ from the cone type mills.

In the technical assessment study, the rubber roll huller and the centrifugal huller mills did not differ significantly from the multipass system - the cone type mills. The monitoring activity supports the technical assessment findings wherein similar results were obtained.

A relationship between paddy rice grade and potential total milled and head rice recoveries was established with paddy samples collected during the monitoring tour (Table 36). It was evident that premium quality paddy did yield high total milled and head rice recoveries at 73.1 and 82.8%, respectively. As the paddy grade fell, the corresponding recoveries also decreased.

Statistical tests showed potential milling recovery rates for premium grade paddy differed significantly from lower grades. Paddy of grades, I, II, and III differed significantly from substandard grade paddy. However, head rice recoveries do not show evident differences between grades. Substandard paddy possesses head yields similar to premium quality paddy. The number of cracked kernels also did not show significant differences by paddy grade.

The collection of paddy samples in the monitoring schedule identified 10 popular rice varieties milled in the study area. Table 37 shows five IR series, one C4, one BPI, and three traditional varieties with corresponding laboratory milling yields. The short grain japonica type (75 days) has the best grain recovery at 69.17%, followed by IR36 at 68.32%. The lowest yield is 65.23% for a mixed type. C4, a long grain type, has a 65.61% milling yield.

The paddy samples used in the 2 season tests conducted in the technical assessment component of the study used IR 36, which performed well. The analysis of the paddy samples gathered during the monitoring component showed similar behavior. The 75-day variety is short and round with relatively little grain breakage in the rice milling process. The C4 variety is longer and more slender and is susceptible to grain breakage.

1/ Based on NGA standard specification for milled rice.

Table 35. Characteristics of milled rice samples collected during monitoring tours by milling system, Bicol River Basin area, 1976-77.[a]

Milling system	Number of samples	Head rice	Broken rice	Brewer's rice	No. of unhulled grains/ 100 g
		% values			
Steel huller (av.)		(48.3)	(50.1)	(1.6)	(0.8)
Dycoco RM	28	50.2 r	49.1	0.7	0.9 q
Torres RM	9	40.0 r	58.1	1.9	1.2 q
Olaño RM	8	38.3 r	58.7	3.0	0.3 q
Rayala RM	26	64.5 q	34.7	0.7	0.9 q
Rubber roll single pass--Vales RM	11	70.5 p	28.6	0.9	1.1 q
Rubber roll-steel huller combination--Bucad RM	12	70.9 p	28.4	0.7	1.7 q
Stone disc-steel huller combination--Serrano RM	10	59.8 r	37.0	3.1	5.8 p
Centrifugal huller--Buhi Procoma RM	10	66.7 pq	32.9	0.4	0.4 q
Cone type (av.)		(75.5)	(22.4)	(0.8)	(0.9)
Libmanan RM	10	77.0 p	22.4	0.5	1.0 q
Concina RM	5	76.5 p	18.8	0.7	1.8 q
Nazarrea RM	12	73.1 p	25.9	1.1	0.6 q
Total	141				

[a] Results from laboratory analysis of milled rice samples.

Note: Using DMRT at 5% level of significance, treatment means with at least one common letter are not significantly different from each other.

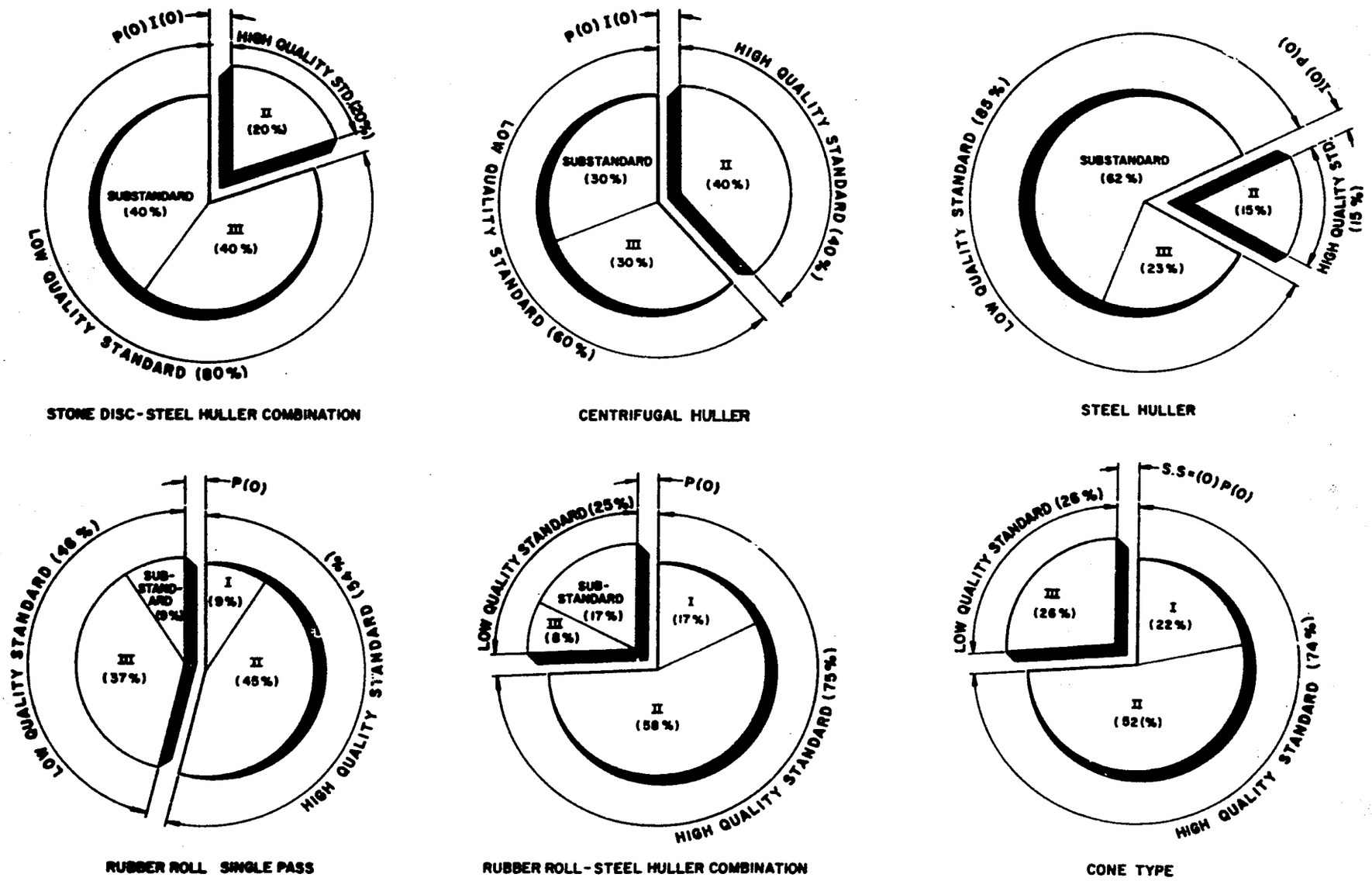

Fig. 29. Grade distribution of milled rice samples by milling system, Bicol River Basin Area, 1976-77.

Table 36. Potential milling and head rice recovery of 150 paddy samples classified according to grade, Bicol River Basin area, 1976-77.

Paddy grade[a]	No. of samples[b]	Potential milling recovery[c]	Potential head rice recovery[c]	Cracked kernel[c]
		percent		
Premium	2	73.1 p	82.8 p	3 p
1	18	68.6 q	79.6 p	5 p
2	24	67.8 q	78.0 p	7 p
3	14	67.8 q	81.4 p	5 p
Substandard	92	66.1 r	82.9 p	6 p
Total	150			

[a]Grading was based on the revised NGA standard specification for palay (1976).

[b]Collected during monitoring tour from 11 rice mills.

[c]Based on laboratory analysis.

Note: Using DMRT at 5% level of significance, treatment means with at least one common letter are not significantly different from each other.

Table 37. Potential total and head rice recovery of popular varieties, Bicol River Basin area, 1976-77.

Variety	No. of samples[a]	Laboratory milling	
		Milled rice	Head rice
		percent	
IR26	15	66.42	79.64
IR28	6	66.69	76.91
IR30	17	66.77	84.02
IR36	22	68.32	80.15
IR38	3	67.24	73.05
C4	16	65.61	83.05
BPI76	11	65.79	83.24
Wag-wag	3	65.91	87.32
Mixed	9	65.23	89.95
75-days	18	69.17	80.42
Total	111		

[a] Collected during monitoring tours.

Adjustments on the milling machine to suit mixed varieties usually key on the shortest grain present, which damage the long type grains and consequently affects milling yield. This is one reason millers do not wish to process mixed varieties.

Observed milling yields. Four steel hullers, one rubber roll single pass, one centrifugal huller, one rubber roll-steel huller combination, one stone disc-steel huller combination and 3 cone type mills were involved in the mill record keeping project. The 9 month collection of daily records on milling system yields (Table 38) showed relatively low numerical values when compared to the technical assessment results. While a large part of the disparity is due to the grain condition in the milling systems, there is an observable trend in performance characteristic for each of the systems. It was found during the monitoring tour that the steel huller milling system had the lowest total milled rice recovery at 61.8% (av.), a finding consistent with other observations. The technical assessment study had the same outcome with the Torres RM showing a higher efficiency at 65.1%. Note that the Torres RM does not vary significantly from the rubber roll huller mills in the technical assessment study. The remainder of the steel hullers were categorized as less efficient.

The same findings were true of the stone disc-steel huller combination. Although giving higher mean values than the steel huller mills, the system remains less efficient than rubber roll milling systems. With 67.6 and 68.5% for the rubber roll single pass mill and the rubber roll-steel huller combination mill, respectively, the systems gave the best monitoring yields. Again, the superiority of milling systems using rubber roll hullers was clear. Examining the efficiency of the rubber roll system compared with the milling potential obtained in the laboratory, differences between the rubber roll single pass and the laboratory mill in total milled rice yield were only 0.1%. The rubber roll-steel huller combination mill exceeded the total milled rice yield of the laboratory rubber roll mill by 1.3%.

A large deviation in the findings of the technical assesement and the monitoring studies was noted when the milling yields of the centrifugal huller were analyzed. At 63.7% total milling recovery, the systems is similar in performance with the stone disc-steel huller combination mill at 63.3%. The technical assessment study showed a 70.3% milling rate for the centrifugal huller mill. The results of the centrifugal huller tests covered only dry season trials. The monitoring activities provided a continuing technical evaluation of this milling system. It was found in the monitoring study that the centrifugal huller does not compare well with the rubber roll huller mills. The difference between observed milling and laboratory yields showed a 4.1% drop in performance, which is high in comparison with the yields of the rubber huller mills.

Table 38. Comparative milling performance of mills included in the monitoring schedule, Bicol River Basin area, 1976-77.

Milling system	No. of observations	Commercial milling yield: Milled rice recovery[a]	Commercial milling yield: Head rice recovery[b]	Laboratory milling yield: Milled rice recovery[c]	Laboratory milling yield: Head rice recovery	Difference bet. commercial & laboratory milling yield: Milled rice recovery	Difference bet. commercial & laboratory milling yield: Head rice recovery
		percent					
Steel huller (av.)	4	(61.8)	(48.3)	(67.1)	(78.8)	(5.3)	(30.5)
Dycoco RM	1	61.1	50.2	67.2	77.5	6.1	27.3
Torres RM	1	65.2	40 0	67.1	74.9	1.9	34.9
Olaño RM	1	61.5	38.3	67.5	77.9	6.0	39.6
Rayala RM	1	59.5	64.5	66.6	84.9	7.1	20.4
Rubber roll single pass	1	67.6	70.5	67.7	84.4	0.1	13.9
Rubber roll-steel huller combination	1	68.5	70.9	67.2	81.3	1.3[d]	10.4
Stone disc-steel huller combination	1	63.3	59.8	65.4	85.1	2.1	25.3
Centrifugal huller	1	63.7	66.7	67.8	84.1	4.1	17.4
Cone type (av.)	3	(66.8)	(75.6)	(66.8)	(81.5)	(0)	(5.9)
Libmanan RM	1	65.9	77.00	66.5	84.1	0.6	7.1
Concina RM	1	67.5	76.25	67.7	81.6	0.2	5.4
Nazarrea RM	1	66.9	73.1	66.1	78.8	0.8[d]	5.7

[a] Based on daily records.

[b] Based on laboratory analysis of milled rice samples collected.

[c] Milling potential of collected paddy samples.

[d] Commercial milled rice recovery is higher than the laboratory.

The performance of the cone type rice mills dropped during the monitoring period, especially the Libmanan RM, which appeared to have the lowest milling yield. The milling potential of the paddy samples gathered at the rice mill, however, also showed a relatively low yield at 66.5%, with a difference of 0.6% between observed and laboratory yields. The same observations hold for two other cone mills, the Concina and Nazarrea RM, with differences of 0.2 and 0.8%, respectively. The cone type mills performed efficiently.

Qualitatively, the cone type mills (employing the multipass whitening) obtained 5% higher head rice yields (average value of 75.5%) than the rubber roll huller mills. Statistical analysis (see Table 35) showed significant differences when the steel huller and stone disc-steel huller mills were compared to cone type mills.

MILL LEVEL SURVEY OPERATIONS

METHODOLOGY

The mill level survey was undertaken to analyze the operations and various activities associated with the conversion of rough rice to a marketable milled rice product. These include storage, drying, and trading (paddy and milled rice). Information was gathered describing milling, drying, and storage facilities, capacity utilization; fuel, oil and power consumption; labor requirements; costs; and levels of investment.

Before the survey, a complete list of registered millers was obtained from the National Grains Authority Regional Office in Legaspi City and the NGA branch office in Camarines Sur. Rice mills were stratified according to type (steel huller or cone type) and rated capacity per 12 hours of operation. Cone type mills (under runner disc-huller) were stratified over three capacity levels: 3.5 t/day and below, 3.6 to 9.0, and 9.1 and above. Steel huller (kiskisan mills) were also segregated to size into the following categories: 1.25 t/day and below, 1.26 to 2.50 and 2.51 and above. Random sampling with provision for replacement was used in drawing sample mills.

For every sample mill two local users of the mill and one non-user were interviewed to determine attitudes and preferences in the choice of mill. During the course of the survey, paddy and milled rice samples were also collected from sample mills for laboratory analysis.[1/]

1/ See Appendix C for a description of the mills and the laboratory procedures employed.

RESULT AND DISCUSSION

Distribution of existing and sample rice mills. Based on the 1976 listing of the National Grains Authority, there were 544 rice mills in the Bicol River Basin area. Eighty-two percent of these are steel huller or Engelberg mills and 18% are cone type mills (Table 39). Cone type mills accounted for 54% of the total volume of paddy milled per year (estimated to be 183,100 t). The remaining 46% was milled in steel huller mills (Fig. 30).

Fifty-three of 544 existing rice mills were drawn as sample observations for indepth interviews to develop profiles of milling operations. Thirty-nine were steel hullers and the remainder were cone type mills. The IAD's 1/ of Rinconada and Pili-Bula registered the highest number of sample mills, while Libmanan-Cabusao IAD's had the smallest number (Table 40).

General characteristics of rice mills. Some general characteristics of the 53 sample mills are presented in Tables 41 and 42. Ninety-four percent of the mills were sole proprietorships, 4% were partnerships, and 2% were owned by corporations.

Only 1 of the 53 sample mills was powered by an electric motor. The rest were driven by diesel engines. An average of 11 hp is required to drive steel huller mills while cone type mills averaged 42 hp. For both types, horsepower requirements increase with size (7 to 16 for steel huller mills and 18 to 61 for cone type mills).

Seventy percent of the mills began operations between 1961-76 and about 30% before 1960. Cone type mills averaged 11 years of operation and steel huller mills 13 years.

Location of mills. Cone type mills are generally located near the main throughfares and in towns away from the main source of paddy (Table 42). The average distance of cone type mills from a main road was about 1 km (100 m for big, 400 for medium, and about 4 km for small capacity cone type mills). The average distance from the source of paddy increases with size ranging from 250 m to about 4 km for the main source and 6 to 21 km for the most distant source. A similar pattern for average distance from the mill to market outlets was also found. Most cone type mills engage in trading (buying and selling of paddy, milled rice or both) so that they have to travel further to buy paddy as well as to sell milled rice.

In contrast, steel huller mills were found in rural areas near the main source of paddy. This mill type is generally household oriented, serving primarily the needs of consumers living within the village.

1/ IAD - Integrated Area Devopment.

Table 39. Distribution of total and sample rice mills by type and capacity, Bicol River Basin area, 1976.

Type and capacity[a]		Total mills[b]		Sample mills	
		No.	%	No.	%
Steel huller					
K_1		120	22	10	19
K_2		270	50	15	28
K_3		54	10	14	26
	Sub-total	444	82	39	73
Cone type					
C_1		32	6	4	8
C_2		37	7	4	8
C_3		31	5	6	11
	Sub-total	100	18	14	27
	Total	544	100	53	100

[a] The capacity levels in number of sacks per 12 hours of operation are as follows:

K_1 - below 26
K_2 - 26-50
K_3 - above 50

C_1 - below 71
C_2 - 71-180
C_3 - above 180

[b] Rubber roll centrifugal and rice mill combinations were classified under the cone type mills.

Source: National Grains Authority.

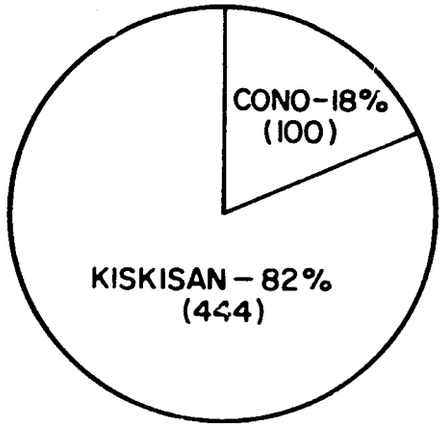

Number of rice mills

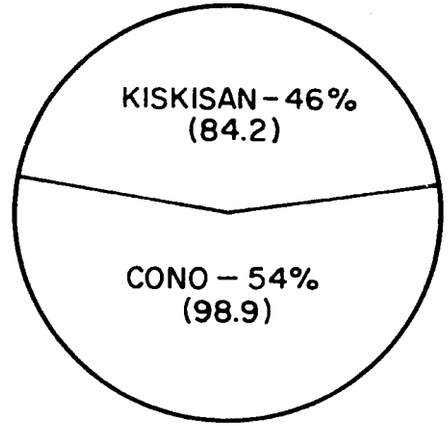

Capacity of rice mills
(Thousand tons/yr.)

Figure 30. Distribution of rice mills by number and rated capacity, Bicol River Basin area, 1976-77.

Table 40. Distribution of sample mills by type and location, Bicol River Basin area, 1976-77.

Location	Steel huller		Cone type		All	
	No.	%	No.	%	No.	%
San Vicente IAD a/	5	13	0	0	5	10
Naga-Calabanga IAD	4	10	2	14	6	11
Pili-Bula IAD	8	21	2	14	10	19
Partido IAD	4	10	2	14	6	11
Rinconda IAD	12	31	4	29	16	30
Libmanan-Cabusao IAD	2	5	1	7	3	6
Quinali IAD	4	10	3	22	7	13
Total	39	74	14	26	53	100

a/ IAD - Integrated Area Development.

Table 41. General characteristics of rice mills by type and capacity,[a] Bicol River Basin area, 1976-77.

	Steel huller				Cone type				All mills
	K_1	K_2	K_3	All	C_1	C_2	C_3	All	
No. of mills	10	15	14	39	4	4	6	14	53
				% values					
Type of ownership									
Sole proprietorship	100	93	92	95	100	100	83	93	94
Partnership	-	7	8	5	-	-	-	-	4
Corporation	-	-	-	-	-	-	17	7	2
Fuel used									
Diesel	100	100	100	100	100	100	83	93	98
Electric	-	-	-	-	-	-	17	7	2
Yrs. mill in operation									
Before 1950	10	-	28	13	-	-	17	7	11
1951 - 1960	40	27	8	23	-	25	-	7	19
1961 - 1970	50	40	8	31	50	75	33	50	36
1971 - 1976	-	33	56	33	50	-	50	36	34

[a] See footnote of Table 39 for rice mill capacity levels studied.

Table 42. Descriptive information for 53 rice mills by type and capacity,[a] Bicol River Basin area, 1976-77.

Item	Steel huller				Cone type				All
	K_1	K_2	K_3	All	C_1	C_2	C_3	All	
	mean values								
Mills reporting (no.)	10	15	14	39	4	4	6	14	53
Size of power units (hp)	7	10	16	11	18	37	61	42	19
No. of years in operation	14	12	11	12	7	16	10	11	12
Distance of mill from main road (km)	1.8	4.4	0.5	2.3	3.9	0.4	0.1	1.3	2
Distance of mill from main source of paddy (km)	0	0.1	0.5	0.2	0.3	3.1	4.2	2.8	0.9
Farthest source (km)	1.4	3.7	4.9	3.5	5.3	12.5	21.2	14.3	6.4
Market outlet									
Main outlet (km)	b/	b/	b/	N.A.	b/	7.5	17.3	15.7	-
Farthest outlet (km)	b/	b/	b/	N.A.	b/	7.5	23.3	25.5	-

a/ See footnote of Table 39 for rice mill capacity levels studied.

b/ Engaged only in custom milling.

N.A. - Not applicable.

The average distance from a main road was more than 2 km while the main source of paddy was generally in the immediate vicinity of the mill (220 m). The most distant source of paddy was about 3.5 km. None of the 39 steel huller mills were engaged in trading activities.

Milling practices. Table 43 shows the different milling practices of rice mills in the Bicol River Basin area. Varieties developed at IRRI comprised the bulk of paddy processed in both mill types (67% for cone type mills and 71% for steel huller mills). The UPLB C-series (C4, C18, etc.) accounted for 15% of the volume, closely followed by traditional varieties such as Intan, Raminad, Binato, etc.

Most cone type mills combined processing with commercial trading operations. Forty-eight percent of their customers were wholesalers/retailers, 31% farmers, 7% landlords, and the remainder was for their own stock. Conversely, none of the steel huller mills surveyed were engaged in trading. These units derived their income solely from fees collected from customers, 95% of which are farmers or local residents in the village.

Thirty-six percent of cone type mills would not accept mixed varieties for milling. Only 13% of the steel huller mills refused such requests. Whenever possible, cone type mill owners prefer unmixed varieties but, as many of their customers are traders, the mill has little or no control over the quality of the paddy submitted for processing. Milling mixed varieties presents some difficulties in adjusting the husker, especially when the mixture contains long and short grains. Long grain varieties break during the husking process if the disc clearance is adjusted for the short grain. Conversely, if disc clearance is adjusted for the long grain, the overall hulling coefficient is reduced significantly when milling short varieties, resulting in lower mill capacity.

For cone type mills, the minimum acceptable quantity of paddy ranged from 100 kg to as high as 1.5 t depending on the size and complexity of the mill. In contrast, steel huller mills would initiate milling operations with as little as 25 kg of paddy. Some steel huller mills would process as little as 10 kg if the customer were insistent and to refuse would jeopardize patronage. The difference in minimal lot size between the cone type and steel huller mills indicates the nature of demand for processing services handled by each mill type.

Both mill types accepted glutinous rice for milling. On the average, 36 sacks of glutinous rice were milled in each steel huller and 61 sacks (50 kg/sack) in cone type mills annually.

Table 43. Practices by mill type and capacity,[a] Bicol River Basin area, 1976-77.

Item	Steel huller				Cone type				All
	K_1	K_2	K_3	All	C_1	C_2	C_3	All	
					percent				
Varieties commonly milled									
IR-series	64	74	74	71	87	74	52	67	70
UPLB-series	20	11	15	15	7	15	24	17	15
Traditional	16	12	8	12	2	6	19	12	12
Others	0	3	3	2	4	5	5	4	3
Customer profile									
Farmers	94	98	92	96	44	45	13	31	78
Landlord	6	1	4	3	2	1	14	7	4
Retailer/wholesaler	0	1	3	1	36	45	58	48	14
Viajero	0	0	0	b/	0	1	0	b/	0
Mill owner	0	0	1	b/	18	8	15	14	4
Process mixed varieties									
No	10	13	14	13	50	33	33	36	19
Yes	90	87	86	87	50	67	67	64	81
					mean values				
Smallest lot size required (kg)	25	25	25	25	100	750	1550	900	250
Glutinous rice milled (t/yr)	3	1	2	2	2	1	5	3	2
Time to mill 1 t paddy (h)	5.5	3.5	2.5	3.4	4.7	2.3	1.0	2.5	3
Man days to mill 1 t paddy	0.5	0.6	0.6	0.6	0.7	0.5	0.3	0.6	0.6
Average milling fee ($/t)	12.16	12.27	10.91	11.89	13.51	12.43	12.16	12.57	12.03

a/ See footnote of Table 39 for rice mill capacity level studied.

b/ Less than 1 %.

Cone type mills generally charged higher milling fees than steel huller mills. On the average, the milling fee in the cone type mill was $0.63 per sack (50 kg/sack) of milled rice which is 15 centavos higher than the average fee found for steel huller mills. Milling fees generally decreased with increased lot size for both mill types. Large cone type mills could usually extend discount rates to customers who required processing of large volumes of paddy.

Capacity utilization of rice mills. In this study, milling capacity was measured in terms of rated and actual capacities. Rated capacity refers to the machine's specification expressed in quantity (cavan or ton) of paddy per 12 hours operation (1 cavan weighs 50 kg.). Actual capacity refers to the maximum quantity of paddy milled in 12 hours operation.

In the foregoing discussion, actual capacity was used in determining the monthly utilization of rice mills. Percent utilization of rice mills was computed as follows:

$$\text{Percent utilization} = \frac{\text{actual quantity milled per month}}{\text{actual monthly capacity}} \times 100$$

$$\text{where actual monthly capacity} = \text{quantity/h} \times \frac{\text{12 hours}}{\text{day}} \times \frac{\text{24 days}}{\text{month}}$$

In this study it was assumed that the rice mill could operate for 12 hours a day, 24 days a month. Six days are alloted for repairs, maintenance, and holidays.

The actual capacity of the rice mills included in the study indicated various degrees of underutilization. Steel huller mills were utilized an average of 26% of rated capacity and cone type mills an average of 64% on a monthly basis (Table 44). Utilization tends to increase with mill size, with the single exception of the medium size steel huller mill, which had the lowest utilization level.

There also appears to be a oonsistent pattern of seasonal utilization in both mill types for all sizes. The exception was the small capacity cone type that showed less variability in utilization throughout the year. Two peaks, centered around March, April, May (dry season) and October and November (wet season) were found (Fig. 31). These coincide with the peak months of harvest for the wet and dry season crops in the region.

Table 44. Average monthly utilization, as a percent of full capacity[a] for 53 rice mills by type and capacity, Bicol River Basin area, 1976-77.

Months	Steel huller				Cone type			
	K_1	K_2	K_3	All	C_1	C_2	C_3	All
No. of mills	10	15	14	39	4	4	6	14
January	26	12	22	18	42	46	58	54
February	28	12	22	18	42	28	54	48
March	26	24	34	30	42	48	86	74
April	38	28	46	38	42	82	96	88
May	36	24	44	36	42	82	72	70
June	24	12	26	20	48	28	54	48
July	22	8	22	18	46	46	54	50
August	22	10	18	16	46	46	54	50
September	38	20	28	26	46	38	56	52
October	52	26	50	42	34	82	100	90
November	40	26	44	36	34	82	100	90
December	26	14	28	22	34	56	76	68
Monthly average	30	18	32	26	40	56	72	64

[a] See footnote of Table 39 for rice mill capacity levels studied.

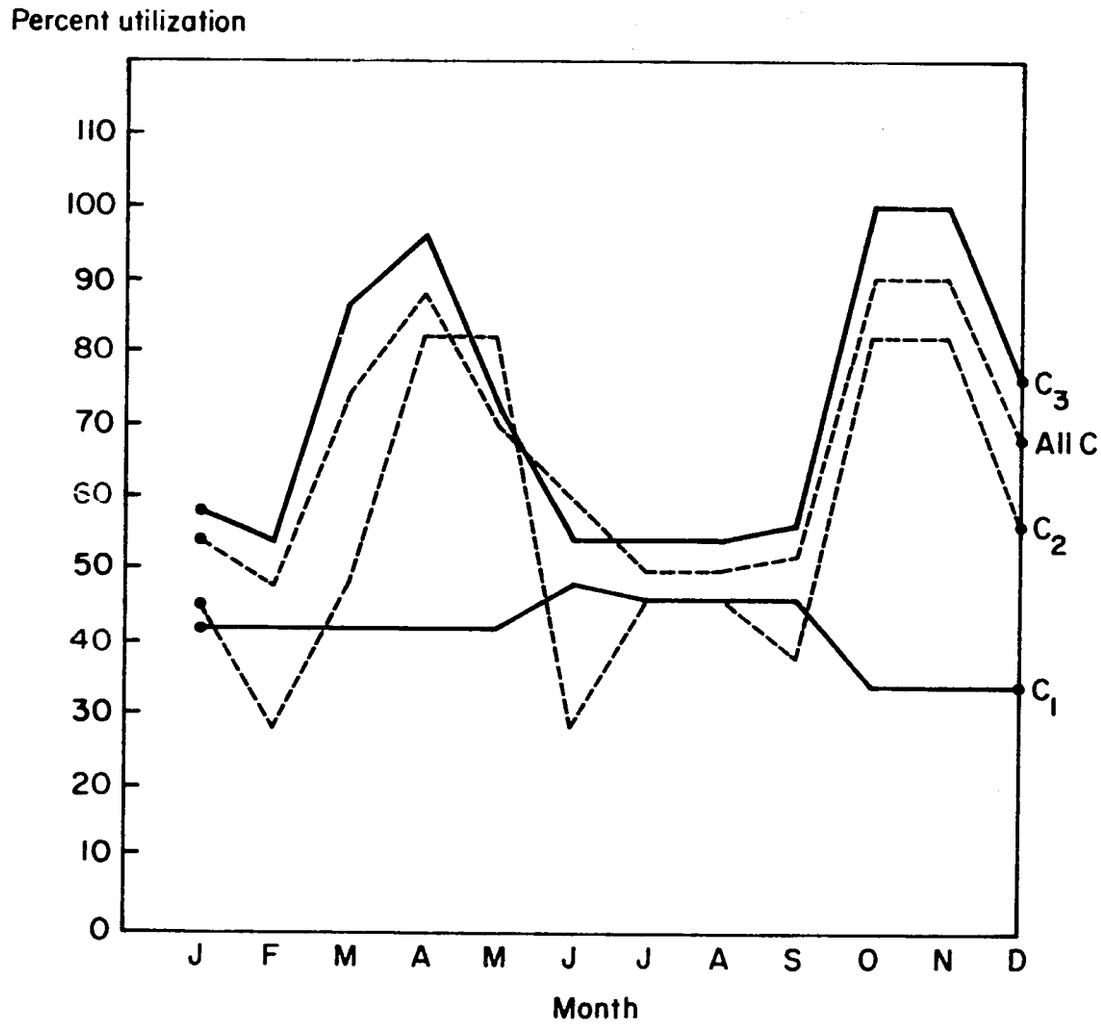

Figure 31. Seasonal utilization pattern of cone type rice mills, Bicol River Basin area, 1976-77.

At these peak months of milling, the capacity of steel huller mills was utilized to a maximum of 42% in October and 38% in April. Utilization levels for cone type mills reached 90% in October and November and 88% in April (Table 44). Lowest monthly utilization (Fig. 32) occurred in July and August for steel huller mills and June and February for cone type mills. These dates coincide with planting seasons in the region.

Higher utilization patterns were observed in cone type mills at all capacities. This was explained by the integrated nature of activities in the cone type mills. Steel huller owners process only the home consumption requirements while cone type units had three major sources of paddy for milling: farmers, traders (retailers/wholesalers, viajeros), and their own stock. Fifty percent of the cone type mill respondents were engaged in trading (buying and selling of paddy and milled rice), which also enhanced overall utilization of individual mills.

On the average, steel huller mills operated 742 hours per year for a period of 265 days or an average of 2.8 h/day. Cone type mills operated 1,763 h for 244 days a year or an average of 7 h/day (Table 45). Average operating hours per day for peak and lean months are also shown in Table 45.

Rice mill facilities and equipment. Cone type mills had a more complete set of facilities and equipment than steel huller mills. All 14 cone type mills studied had platform scales with an average of 2 scales per mill. Only 22 of the 39 steel huller units had scales, averaging 1 scale per mill (Table 46). For transport equipment, only one of the steel huller mill owners possessed a jeep for hauling paddy. In contrast, eight cone type mill owners had trucks, trailers, and jeeps. Possession of hauling equipment indicates the commercial orientation of the cone type mills.

Of 14 cone type mill owners interviewed, 10 reported possession of office equipment. The 4 without office equipment were small mills. None of the 39 steel huller owners had chairs, tables, or any office equipment associated with the business. Only 5 of 14 cone type owners had moisture meters. None of the steel huller owners had or used this type of instrumentation. Eight cone type mills reported ownership of fire extinguishers, while only 4 of 39 steel huller owners had fire extinguishers installed on the premises.

Unlike steel huller mills, a majority of the cone type mills provided drying and storage services to customers, either as an incentive for milling or for fee depending on the nature of the services provided. Labor for these activities is usually provided by the paddy owner.

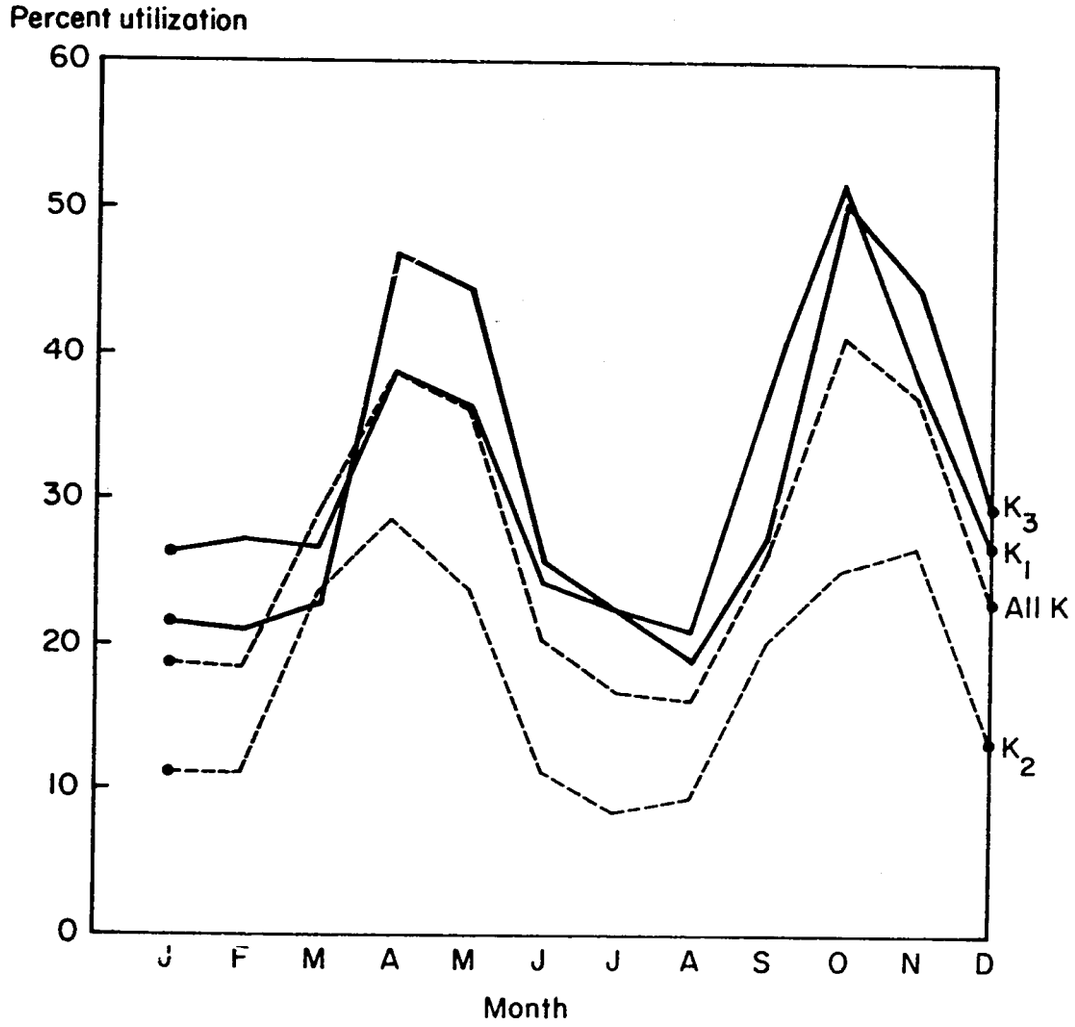

Figure 32. Seasonal utilization pattern for steel huller mills, Bicol River Basin area, 1976-77.

Table 45. Mill utilization for peak and lean months by type and capacity,[a/] Bicol River Basin area, 1976-77.

Type and capacity	Operating days/year	Operating hours/year	Ave. operating hours/day		
			Peak	Off-season	All months
Steel huller					
K_1	279	778	4.5	1.8	2.8
K_2	272	522	3.1	1.0	1.9
K_3	247	954	5.1	2.5	3.9
Subtotal	265	743	4.2	1.8	2.8
Cone type					
C_1	242	1224	7.9	3.6	5.1
C_2	205	1598	9.8	5.2	7.8
C_3	272	2232	10.0	6.4	8.2
Subtotal	244	1763	9.2	5.1	7.2
TOTAL	259	1012	5.5	2.6	3.9

a/ See footnote of Table 39 for rice mill type and capacity levels studied.

Table 46. Rice mill facilities by type and capacity,[a] Bicol River Basin area, 1976-77.

	Steel huller				Cone type			
	K_1	K_2	K_3	All	C_1	C_2	C_3	All
No. of mills	10	15	14	39	4	4	6	14
With platform scale	8	4	10	22	4	4	6	14
Av. no. of platform scale/mill	1	1	1	1	1	2	3	2
With transport equipment	-	-	1	1	-	3	5	8
With office equipment	-	-	-	-	-	4	6	10
With moisture meter	-	-	-	-	-	1	4	5
With fire extinguisher	1	2	1	4	1	2	5	8

[a] See footnote of Table 39 for rice mill type and capacity levels studied.

Drying facilities and practices. Of the 53 rice mills studied only 13 -- 25% -- had drying facilities. Seventy-nine percent of cone type mills had drying facilities but only 5% of the steel huller mills had (Table 47). Solar drying was by far the most common method reported. Paddy was generally spread on concrete slabs without any underlay. Only one cone type mill reported ownership of a mechanical dryer (flatbed type).

Solar dryers operate about 6 h/day during peak months compared to 12 h/day for the mechanical dryer (Table 47). During off-season months the average length of the drying period was 5 and 7 h/day for the solar and mechanical dryer, respectively.

Sixty-two percent of mills offered free drying facilities provided the paddy was processed in their rice mill. Twenty-three percent used dryers solely for their own stock and only 15% charged a drying fee of $0.03 per sack (50 kg/sack) of dried paddy.

Capacity utilization of dryers. Drying capacity was measured at both rated and actual capacity. Rated capacity is defined as the quantity the dryer can handle in one loading or during a single shift. Actual drying capacity is the quantity dried in 1 day of operation. Actual capacity can be equal or greater than the rated capacity depending on the number of batches per day of operation.

The capacity of solar dryers at steel huller mills is much lower than for similar facilities at cone type mills (6.5 and 5.05 t for rated and actual capacity in cone type mills compared to only 0.35 t at the steel huller mills -- Table 48). Steel huller mills had smaller available capacity because they normally do not perform custom drying. High moisture paddy is usually rejected at most steel huller mills. Paddy brought to these units for milling is usually sun-dried at the farmers' home or elsewhere. Cone type mills own large drying facilities because most are engaged in paddy and/or rice trading. The bulk of the paddy they dry is usually for their own stocks. If customers use their drying facilities, it is either for a fixed fee or as an incentive to foster continuous patronage of the mill. In the latter case, the owner of the paddy must provide labor for drying.

Storage/warehousing facilities. Similar to drying, warehousing was an integral part of the operations of large cone type mills. Only 21% of the 53 mills studied had warehouses or storage facilities, all of which were at cone type mills (Table 49). Of the 11 cone type mills with warehouses only 2 were bonded. They all used these facilities for their own stocks or for customers as an incentive for continuous patronage.

Table 47. Drying practices and facilities by mill type, 53 rice mills, Bicol River Basin area, 1976-77.

Item	Steel huller				Cone type				All			
	Solar		Mechanical		Solar		Mechanical		Solar		Mechanical	
	No.	%	No.	%	No.	%	No.	%	No.	%	No.	%
Total no. of mills	39	100			13	93	1	7	52	98	1	2
With dryer	2	5			11	79	1	7	13	25	1	2
Without dryer	37	95			3	21	13	93	40	75	52	98
Fee per sack[a/]												
$0.03			NA	NA	2	18			2	15		
Free to mill customer	2	100	NA	NA	6	55			8	62		
Dryer used for own stock			NA	NA	3	27			3	23	1	100

a/ One sack = 50 kgs. at 14% m. c.

Table 48. Other drying practices by mill type, 53 rice mills, Bicol River Basin area, 1976-77.

Items	Steel huller		Cone type		All	
	Solar	Mechanical	Solar	Mechanical	Solar	Mechanical
Drying period (h/day)						
Peak months	0	0	6.18	12	6.18	12
Scarce months	0	0	4.82	7	4.82	7
Tempering period before milling (days)	1	0	1	1	1	1
Average drying cost ($/sack)	.04	0	.04	0.16	.04	0.16

Table 49. Storage and warehousing facilities for 53 rice mills by mill type, Bicol River Basin area, 1976-77.

	Cone type		Steel huller		All mills	
	No.	%	No.	%	No.	%
			Mills reporting			
Number of mills	14	100	39	100	53	100
With storage/ warehouse	11	79	0	0	11	21
Without	3	21	39	100	42	79
Type of warehouse						
Bonded	2	18	0	0	2	4
Not bonded	9	82	0	0	9	17
Type of storage						
Sack	11	100	0	0	11	21
Bulk	0	0	0	0	0	0
Storage/warehousing fee						
$0.01-0.03/sack/ 3 months	2	18	0	0	2	4
Free to mill customers	7	64	0	0	7	13
Warehouse used for own stock	2	18	0	0	2	4

All the mills surveyed used gunny sack storage. The sacks are usually piled according to varieties or type of grain (long or short grains).

A majority of the mills reporting (64%) offered free storage services to mill customers with the understanding that the paddy stored would be processed in the rice mill. Two respondents used their warehouses solely for their own stocks, while two charged a storage fee of $0.01 to $0.03 per sack of paddy. Storage time averaged 3 months.

Reason for choice of mill. Nearness and availability of the mill was the main criterion affecting mill users' choice. These factors accounted for 57% of the total responses (Table 50). Fifteen percent mentioned milling efficiency as their main reason while type of product most wanted was reported by 11%.

A majority of the steel huller users stated nearness and availability, accounting for 66% of the total responses. Fourteen percent cited type of product as their main reason. In contrast, majority of cone type mill users reported milling efficiency as their main reason (47%) followed by nearness and availability (29%). This indicates that cone type mill users expect higher milling and head rice recoveries from the mill they use, while steel huller users prefer a higher output of bran, "binlid", and ground hulls for their livestock.

ECONOMIC ANALYSIS

Method of analysis. The analysis concentrates on milling data only and excludes administrative costs, storage costs, and other economic activities of the mill owner. Cost, revenue, and other pertinent information were gathered through intensive interviews with mill owners included both in the technical assessment and monitoring activities; from rice mill equipment manufacturers and dealers; and from technical data obtained during the technical assessment and monitoring phases of the study.

Average costs, revenues and profits are the most frequent economic criteria used in comparing data among different systems. The mean figures for cost, revenue, and profit (per ton basis) are monthly data divided by the quantity of paddy input (in tons) at the stated rate of utilization. The figures obtained refer to per ton of paddy input.

Capital investment. Fixed capital includes land, buildings, and rice mill machinery and equipment. In this analysis, village mills were assumed to occupy no land other than that of the building they use, as they are compact and service oriented. In contrast, cone type mills

Table 50. Resons for choice of mill by mill type, Bicol River Basin area, 1976-77.

Item	Steel huller		Cone type		All	
	No.	%	No.	%	No.	%
No. of mill users reporting	111	100	34	100	145	100
Nearness and accessibility	73	66	10	29	83	57
Milling efficiency[a/]	6	5	16	47	22	15
Type of product[b/]	16	14	0	0	16	11
Close personal relation	9	8	2	6	11	8
Mill operator's honesty	1	1	3	9	4	3
Accept small lot size	0	0	2	6	2	1
Source of credit	1	1	0	0	1	c
Accept high moisture paddy for milling	1	1	0	0	1	c
Lower milling fee	1	1	0	0	1	c
Others	3	3	1	3	4	3

[a/] Refers to high milling and head rice recovery.

[b/] Refers to more bran and brewer's rice.

[c/] Less than 1%.

occupy relatively larger land and building areas due to the diversity of the components (huller, precleaner, aspirator, separator, etc.) that make up the system and a wide range of activities. In addition, a majority of cone type mills engage in commercial processing and trading, which requires additional space for storage and drying facilities. Village milling systems employing rubber hullers require higher investment costs compared to steel and stone huller mills. Initial investment costs for different mills, as shown in Table 51 are based on current replacement cost.

Fixed and variable costs. Costs for the systems consist of fixed and variable components. Fixed costs are primarily charges related to interest on investment and depreciation. Variable costs are those incurred in the operation of the mill, such as fuel and lubricants, repairs and maintenance, and labor. Variable costs vary in proportion to utilization, as measured by hours of operation, while total fixed costs remain constant at any output level. Monthly fixed and variable costs are shown in Tables 52 and 53.

Costs (fixed, variable, and total) per unit quantity are analyzed at observed utilization levels and four projected utilization levels -- 25, 50, 75, and 100%.[1/] Average fixed cost (Table 54) is obtained by dividing monthly fixed cost by the quantity of monthly paddy input (Table 55) at the stated rate of utilization. Average fixed costs declines as utilization increases. Lower average fixed costs were obtained on mills with high utilization levels as indicated by the cone type and rubber roll-steel huller combination type mill. However, at the same utilization level (say 25 or 50%), milling systems with lower capital investment requirements (steel huller mill) and high milling capacity (centrifugal type mill) showed lower fixed costs per ton.

The variable cost per ton of paddy input is constant for each system, i.e., it does not vary with utilization. Average total cost (Table 56) is the summation of average fixed and variable costs. In general, the average total cost curves (Figs. 33a and 33b) for the different milling systems decreased gradually and tended to flatten out at some point of output level. Since the average variable cost is constant, the decrease in the average cost is attributed to lower per unit fixed cost as output increases. Underutilization causes total cost per ton to increase as indicated by centrifugal type and stone disc-steel huller combination mill. At the same utilization levels, the steel huller mill shows a lower average cost than the rubber roll single pass and the cone type mill, which registered the highest cost per ton of paddy.

[1/] Full capacity utilization is based on 12 hours operation per day for 24 days a month or 288 hours/month.

Table 51. Capital investment by milling system, Bicol River Basin area, 1976-77.[a]

Milling system	Number of observation	Land[b]	Building[c]	Mill machinery and equipment[d]	Total
			$		
Steel huller	4	605.95	1,350.95	2,777.03	4,734.05
Rubber roll single pass	1	605.95	1,350.95	5,000.00	6,957.03
Rubber roll-steel huller comb.	1	605.95	1,350.95	5,675.95	7,632.97
Stone disc-steel huller comb.	1	605.95	1,350.95	4,730.00	6,687.03
Multiple steel huller	1	605.95	1,350.95	3,825.95	5,782.97
Centrifugal huller	1	605.95	1,350.95	5,337.97	7,295.00
Cone type (av.)	(3)	1,655.95	12,612.97	14,500.00	28,769.05
large	1	2,424.05	20,000.00	20,275.95	42,700.00
medium	1	1,737.03	12,800.00	15,675.95	30,212.97
small	1	807.97	5,040.00	7,553.92	13,300.95

[a] Based on current replacement costs.

[b] Cost of land = $2.03/sq. m.

[c] Building cost:

Village mills - $27.03/sq. m. of building area.
Commercial mills - $40.54/sq. m. of building area.

[d] Includes cost of prime mover and installation - based on latest prices provided by major rice mill manufacturers and dealers.

Table 52. Observed fixed costs by milling system, Bicol River Basin area, 1976-77.

Milling system	No. of observ-ation	Interest[a/]	Depre-ciation[b/]	Others[c/]	Total fixed cost	Monthly fixed cost
				$		
Steel huller	4	815.54	345.00	67.97	1265.00	105.00
Rubber roll single pass	1	1252.03	567.97	67.97	1887.97	157.03
Rubber roll-steel huller combination	1	1374.05	635.00	67.97	2077.03	172.97
Stone disc-steel huller combination	1	1202.97	540.95	67.97	1812.03	150.95
Multiple steel huller	1	1040.95	450.00	67.97	1559.05	130.00
Centrifugal huller	1	1312.97	600.95	67.97	1982.03	165.00
Cone type (av.)	(3)	5171.89	2080.95	135.00	7387.97	615.95
large	1	7685.95	3027.97	184.05	10897.97	907.97
medium	1	5437.97	2207.97	150.00	7795.95	650.00
small	1	2394.05	1007.03	72.03	3472.97	289.05

[a/] Interest rate : 18% per annum

[b/] Depreciation : straight line method with no salvage value
: 10 years life for mill machinery and equipment
: 20 years life for building

[c/] Others include taxes, fees, licenses, insurance, etc.

Table 53. Monthly variable costs for alternative milling system, Bicol River Basin area, 1976-77.

Milling system	No. of observ-ation	Fuel & lubri-cants	Repair & mainte-nance	Labor[a/]	Total variable cost	Average variable cost[b/]
				$/month		$/ton
Steel huller	4	11.89	8.41	23.30	43.59	3.20
Rubber roll single pass	1	16.91	22.80	38.30	78.00	4.41
Rubber roll-steel huller combination	1	51.91	71.91	152.80	276.59	4.00
Stone disc-steel huller combination	1	12.59	5.41	12.30	30.30	4.30
Multiple steel huller	1	12.30	9.00	17.41	38.70	4.20
Centrifugal huller	1	11.30	20.80	28.00	60.09	5.80
Cone type (av.)	3	15.43	41.30	183.59	339.09	4.00
large	1	249.00[c/]	58.50	446.00	753.70	3.09
medium	1	47.80	25.84	56.30	130.00	4.20
small	1	45.91	39.41	48.59	133.91	5.09

[a/] 20% of gross income

[b/] $AVC = \frac{TVC}{\text{paddy input at actual utilization}}$

[c/] Using electric motor at $0.05/kw-h

Table 54. Fixed cost per ton for alternative milling systems at actual and projected utilization levels[a/], Bicol River Basin area, 1976-77.

Milling system	No. of observation	Utilization level				
		Actual	25%	50%	75%	100%
				$/t		
Steel huller	4	7.59	3.70	1.80	1.20	0.91
Rubber roll single pass	1	8.91	8.91	4.50	2.91	2.20
Rubber roll-steel huller combination	1	2.50	7.80	3.91	2.50	1.91
Stone disc-steel huller combination	1	21.49	5.20	2.59	1.70	1.30
Multiple steel huller	1	13.91	6.70	3.41	2.20	1.70
Centrifugal huller	1	15.91	3.80	1.91	1.30	0.95
Cone type (av.)	(3)	7.30	14.86	7.50	5.00	3.70
large	1	3.70	14.30	7.09	4.80	3.59
medium	1	20.91	15.00	7.50	5.00	3.80
small	1	10.95	16.70	8.41	5.59	4.20

a/ Fixed cost/ton = $\frac{\text{monthly fixed cost}}{\text{monthly quantity of paddy processed at different projected utilization levels}}$

Table 55. Quantity of paddy processed by milling system at actual and projected utilization levels, Bicol River Basin area, 1976-77.[a]

Milling system	No. of observation	Actual capacity[b]	Actual utilization[c]	Monthly paddy input at different rates of utilization[d]				
				Actual	25% (72 h)[e]	50% (144 h)[e]	75% (216 h)[e]	100% (288 h)[e]
		t/h	%	t/mo				
Steel huller	4	(0.397)	12	13.72	28.58	57.17	85.75	144.34
Rubber roll single pass	1	0.245	25	17.64	17.64	35.28	52.92	70.56
Rubber roll-steel huller combination	1	0.315	77	69.85	22.68	45.36	68.04	90.72
Stone disc-steel huller combination	1	0.405	6	7.00	29.16	58.32	87.48	116.64
Multiple steel huller	1	0.269	12	9.30	19.37	38.74	58.10	77.47
Centrifugal huller	1	0.600	6	10.37	43.20	86.40	129.60	172.80
Cone type (av.)	(3)	0.574	51	84.30	41.30	82.60	124.00	165.30
large	1	0.882	97	246.40	63.50	127.01	190.50	254.02
medium	1	0.600	18	31.10	43.20	86.40	129.60	172.80
small	1	0.240	38	26.27	17.28	34.56	51.84	69.12

[a] Assumed utilization levels - 25, 50, 75, and 100%.

[b] Based on actual test conducted for wet and dry seasons, 1976-77.

[c] Based on daily records of monitored mills.

[d] Monthly full capacity is based on 12 hours operation per day for 24 days a month or 288 hours/month.

[e] Values in parenthesis are projected monthly operating hours.

Table 56. Average total costs for alternative milling systems at actual and projected utilization levels.[a/]

Milling system	Number of observation	Actual utilization rate	Average total cost $/ton				
			Actual	25%	50%	75%	100%
Steel huller	4	12	10.80	6.91	5.00	4.41	4.09
Rubber roll single pass	1	25	13.30	13.30	8.91	7.30	6.59
Rubber roll-steel huller comb.	1	77	6.50	11.80	7.91	6.50	5.91
Stone disc-steel huller comb.	1	6	25.91	9.50	6.91	6.00	5.59
Multiple steel huller	1	12	18.09	10.91	7.59	6.41	5.91
Centrifugal huller	1	6	21.70	9.59	7.70	7.09	6.76
Cone type (av.)	(3)	51	11.30	18.86	11.50	9.00	7.70
large	1	97	6.80	17.39	10.19	7.89	6.69
medium	1	18	25.11	19.20	11.70	9.20	8.00
small	1	38	16.04	21.80	13.50	10.69	9.30

[a/] Average total cost = average fixed + average variable cost.

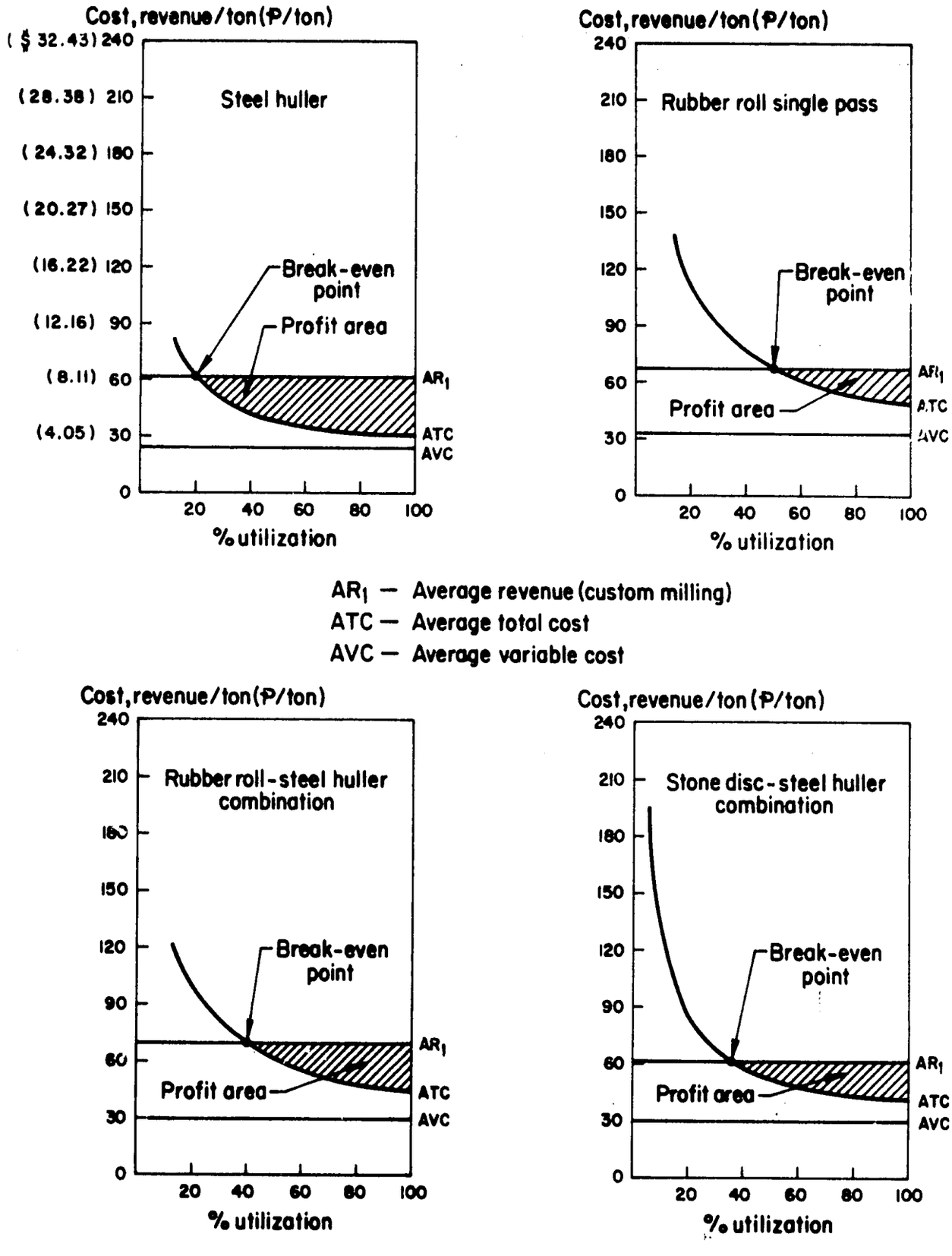

Figure 33a. Average total cost and revenue for alternative milling system, Bicol River Basin area, 1976-77.

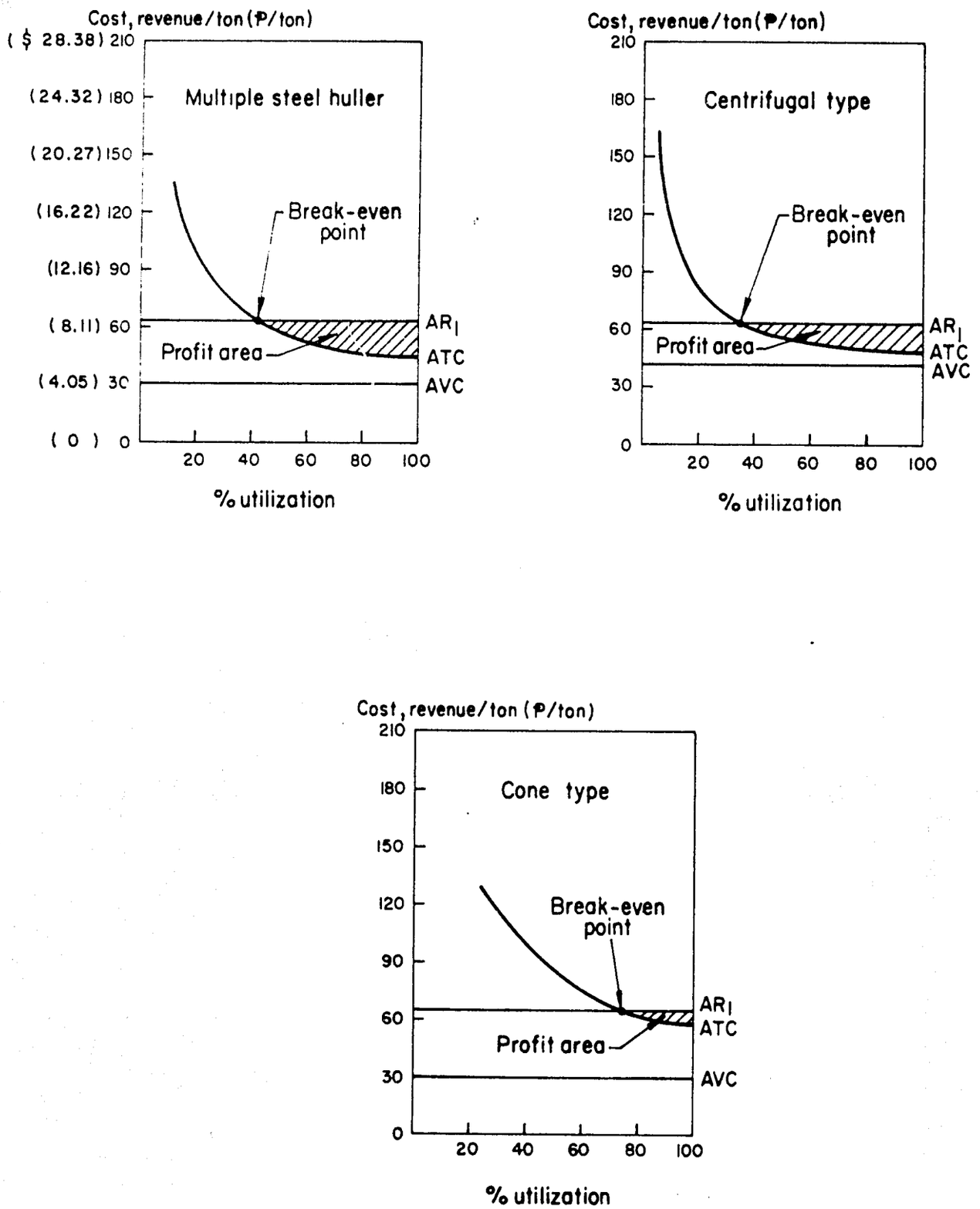

Figure 33 b. **Average total cost and revenue for alternative milling system, Bicol River Basin area, 1976-77.**

Table 57. Revenue and profit per ton for alternative milling systems,[a] Bicol River Basin area, 1976-77.

Milling system	No. of observation	Milled rice output[b] (t/mo.)	Milling fee ($/t)[c]	Revenue from milling ($/mo.)	Revenue per ton ($/t)	Actual	Utilization rate 25%	50%	75%	100%
							Profit/t ($/t)[d]			
Steel huller	4	8.5	13.51	114.86	8.36	(2.43)	1.46	3.36	3.96	4.27
Rubber roll single pass	1	11.9	13.51	160.81	9.12	(4.18)	(4.18)	.22	1.82	2.53
Rubber roll-steel huller combination	1	47.8	13.51	645.95	9.24	2.74	2.55	1.34	2.74	3.34
Multiple steel huller	1	5.9	13.51	79.73	8.57	(9.53)	(2.34)	.97	2.16	2.66
Stone disc-steel huller combination	1	4.4	13.51	59.46	8.50	(17.41)	(1.0)	1.50	2.50	2.91
Centrifugal huller	1	6.6	13.51	89.19	8.59	(13.11)	(1.0)	.89	1.50	1.84
Cone type (av.)	(3)	56.3	13.51	760.81	9.03	(2.27)	(9.84)	(2.47)	.03	1.32
large	1	162.6	13.51	2197.30	8.92	2.12	(8.47)	(1.27)	1.03	2.23
medium	1	21.0	13.51	283.78	9.12	(15.99)	(10.08)	(2.58)	(.08)	1.12
small	1	17.6	13.51	237.84	9.05	(6.99)	(12.74)	(4.45)	(1.64)	.24

[a] Revenue is derived from milling fee only.

[b] Paddy input x milling recovery from monitoring data.

[c] In actual practice rubber roll mills are charging $0.003/kg higher than other mills.

[d] Profit/t = revenue/t - total costs/t; values in parentheses indicate that the mill incurred losses.

Table 58. Revenue per ton for alternative milling systems,[a] Bicol River Basin area, 1976-77.

Milling system	No. of observation	Milled rice output/t paddy[b] (t)	Milled rice sale/t paddy[c] ($)	Amount of by-products/t paddy[d] (kg)	Average price/kg. of by-product[e] ($)	Sale of by-product/t paddy ($)	Total sale/t paddy[f] ($)	Price/t paddy ($)	Net revenue/t ($)
Steel huller	4	0.618	167.03	295	0.04	11.96	178.99	155.41	23.58
Rubber roll single pass	1	0.676	182.70	72	0.08	5.84	188.54	155.41	33.14
Rubber roll-steel huller combination	1	0.685	185.14	87	0.08	7.05	192.19	155.41	36.78
Stone disc-steel huller combination	1	0.633	171.08	150	0.06	9.12	180.20	155.41	24.80
Multiple steel huller	1	0.630	170.27	308	0.04	12.50	182.77	155.41	27.36
Centrifugal huller	1	0.637	172.16	74	0.08	6.00	178.16	155.41	22.77
Cone type (av.)	(3)	0.668	180.54	82	0.08	6.65	187.19	155.41	31.78
large	1	0.659	178.11	74	0.08	6.00	184.11	155.41	28.70
medium	1	0.675	182.43	76	0.08	6.16	188.59	155.41	33.19
small	1	0.669	180.81	95	0.08	7.70	188.51	155.41	33.11

[a] Revenue from commercial processing and trading.

[b] Derived from total milled rice recovery by milling system.

[c] $0.27/kg. of milled rice.

[d] By-product includes bran, brewer's rice, and ground hull.

[e] Prevailing prices based on interview.

[f] Milled rice and by-product sales.

Revenue analysis. Possible sources of revenue in rice milling include milling fees, warehousing and drying fees, and trading. Only revenue derived from custom milling and trading will be considered in this analysis. Revenue from milling is milled rice output multiplied by a milling fee. Income from trading is the value of milled rice output and by-products less the cost of paddy input. Average revenues are presented from custom milling in Table 57 and trading in Table 58.

Average revenue varies proportionately with mill efficiency. Increasing milled rice output means larger quantity of rice for sale (grain trading) or for a fee in the case of custom milling. In custom milling, steel huller mills showed the lowest average revenue followed by the stone disc-steel huller combination. The rubber roll-steel huller combination indicated the highest revenue followed by the rubber roll single pass and cone type mills.[1/]

In commercial processing and trading, the centrifugal type mill indicated the lowest revenue due to low milled rice and by-product recovery. Higher by-product recovery for the steel huller mills increased average revenue slightly but not sufficiently to offset low milled rice recovery. The price of by-products from steel huller mills is lower because of the low quality mixture created by mixing hull with bran which has a low nutritional value as a livestock feed. The rubber roll-steel huller combination indicated the highest revenue per ton of paddy.

Profit and breakeven analysis. Table 57 shows that only the rubber roll-steel huller combination and the large cone type mills are making a profit at observed utilization levels. The highest loss was registered by the stone disc-steel huller combination and the medium size cone type mill because of a low level of utilization.

Figures 33a and 33b show that average revenues for all mills are greater than average variable costs. This indicates that with respect to variable expenses, the mills have operating revenues in excess of variable costs and they can continue operating.[2/] As output approaches

---

[1/] No analysis is shown for the modern multipass mill as no cost and revenue data were available.

[2/] There are several explanations why mills will continue to operate although they may not cover total costs; 1) any revenue in excess of variable costs can be used to meet some portion of fixed cost obligations, 2) many mills may be fully depreciated thus having fixed costs lower than the current replacement costs used to calculate the figures shown, 3) other operations of the mill such as paddy procurement and trading may be used to offset losses resulting from mill operations. Unfortunately, no attempt was made to collect procurement prices for paddy and it is not possible to determine the spread between actual prices paid farmers and prices received for milled rice sold in trading operations.

rated capacities, fixed costs would be covered and a profit would be realized.

Breakeven points for each milling system are the points at which revenue earned is sufficient to meet total costs. The breakeven points for all mills are shown in Figures 33a and 33b. The lowest breakeven point was indicated by the steel huller mill at about 20% utilization rate while cone type mills registered the highest utilization level needed to cover total average costs.

In commercial processing and trading, only the stone disc-steel huller combination incurred losses at actual utilization rates (Table 59). The rubber roll-steel huller combination indicated the highest profit at all levels of utilization followed by the rubber roll single pass system. As stated earlier, milling recovery rates have a measurable impact on profits. Although rice mills using rubber hullers have higher operating costs than steel hullers, the difference in recovery rates results in a significant difference in profit per unit output between the two mill types.

ECONOMICS OF IMPROVING THE STEEL HULLER

The technical assessment and monitoring study indicated that among village mills, the rubber roll-steel huller combination performed best in both technical efficiency and economic profitability. In addition, it has the highest actual utilization rate of 77% showing a high degree of acceptability for such a system. These findings suggest that the one alternative for modernizing existing steel huller mills is to disaggregate the milling process, using the steel huller for the whitening and to add a rubber roll huller for hulling (see Appendix C for a more detailed description of such a system).

Adaption of the rubber roll huller to existing steel huller mills would not entail additional investment in land, buildings or power sources since they are compact and exhibit a low power requirement (see Fig. 22 and C20 for a layout and schematic diagram of a rubber roll-steel huller combination). Additional investments for the hulling head and intermediate hull aspirator will be required.

A recent survey of rice mill manufacturers and dealers showed there are about seven distributors of rubber roll hullers, five of which are marketing imported brands. Price ranges from $1081.08-$2635.14 or an average of about $1891.89 for the hulling unit alone. If local design and fabrication of the rubber roll huller could be encouraged, unit cost would be considerably reduced. Introduction and use of this technology would also encourage local low-cost production of replacement rolls for the mill. These rolls are the largest element in the variable costs for the rubber roll type huller.

Table 59. Profit per ton for alternative milling systems, Bicol River Basin area, 1976-77[a].

Milling system	Number of observation	Actual utilization rate	Utilization rate				
			Actual	25%	50%	75%	100%
			Profit ($/t)[b]				
Steel huller	4	12	12.78	16.68	18.58	19.18	19.49
Rubber roll single pass	1	25	19.84	19.84	24.23	25.84	26.54
Rubber roll-steel huller combination	1	77	32.99	24.99	28.88	30.28	30.88
Stone disc-steel huller combination	1	6	(1.11)	15.30	17.89	18.80	19.20
Multiple steel huller	1	12	9.27	16.46	19.77	20.96	21.46
Centrifugal huller	1	6	1.07	13.18	15.07	15.68	16.01
Cone type (av.)	(3)	51	20.49	13.24	20.28	22.78	24.08
large	1	97	21.91	11.31	18.51	20.81	21.96
medium	1	18	8.08	13.99	21.49	23.99	25.19
small	1	38	17.07	11.31	19.61	22.42	23.81

[a] Mills are engaged in commercial processing and trading.

[b] Values in parentheses indicate the mill incurred losses.

To illustrate the additional profit possible by reducing initial investment cost, profitability analysis for different investment levels at various utilization rates was prepared for the rubber roll huller using the following assumption: 1) milling recovery for the new system is 68%, 2) variable costs are the same at all investment levels, 3) revenue is derived from custom milling only and is constant at all investment levels, 4) the milling fee is fixed at $0.01/kg of milled rice, and 5) hulling capacity is 1 t/h.

Table 60 and Figure 34 show the relationships between investment level and average profit at four rates of utilization. An inverse relation was established between investment costs and average profit, i.e., as investment cost decreases, profit per ton increases. Figure 34 shows that investment cost has a pronounced effect on profitability, particularly at lower rates of utilization. At higher utilization rates, the fixed costs are more fully covered, causing the average total cost curve to flatten out (refer to Figures 33a and 33b). With the average revenue constant, the average profit curve tends to become level as it approaches the level of average variable cost.

As an example, reducing investment cost from $1,891.89 - $810.81 will increase average profit per ton by $0.47, $0.24, $0.15, and $0.12 at 25, 50, 75, and 100% utilization, respectively. Projecting these figures on a yearly volume basis, an additional profit of more than $405.41 will be realized operating at a 25% utilization level.

Summary of Findings

TECHNICAL ASSESSMENT

Among village mills, the rubber roll single pass, rubber roll-steel huller combination, and the centrifugal huller provided the best performance in milling recovery. With the exception of one steel huller mill, these mills are statistically more efficient than other village mills. Systems employing rubber hullers gave the highest head rice recoveries. Steel huller mills had the lowest head rice yields. Rubber roll mills also had the highest hulling efficiency being significantly higher than all other mill types. Among commercial systems, the cone type mill compared technically with the rubber roll multipass both on the basis of head rice and total milled rice recovery. Two cone type mills performed better than the rubber roll units in this respect.

Table 60. Profit per ton for different investment costs of rubber roll huller at different utilization rates, 1978[a].

Investment cost	Utilization rates			
	25% (864 t)	50% (1,728 t)	75% (2,592 t)	100% (3,456 t)
	Profit ($/t)			
540.54	5.76	5.86	5.82	5.93
810.81	5.64	5.81	5.86	5.91
1081.08	5.51	5.76	5.84	5.86
1351.35	5.39	5.69	5.80	5.84
1621.62	5.27	5.64	5.76	5.81
1891.89	5.16	5.57	5.72	5.78
2162.16	5.04	5.51	5.68	5.76
2432.43	4.92	5.46	5.64	5.72
2702.70	4.80	5.39	5.59	5.69

[a] Profit is derived from custom milling operations.

Profit/t = Revenue/t from custom milling less the total cost/t.

Note:
See Appendix tables A13 and A16 for detail of cost.

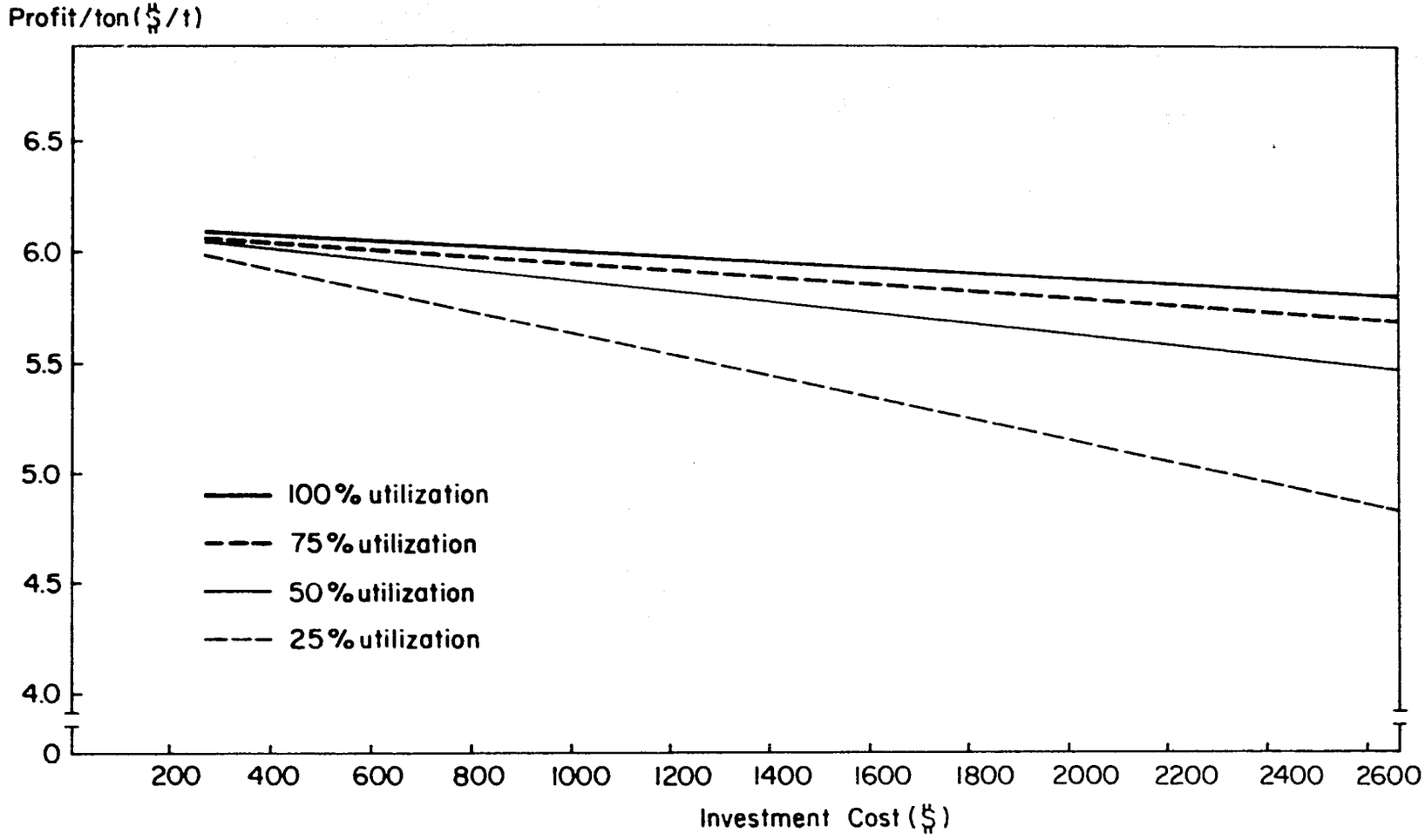

Figure 34 Relationship between rubber roll huller investment cost and profit per ton at different rates of utilization, 1978.

MILL LEVEL SURVEY

Eighty-two percent of all mills in the Bicol River Basin are steel huller units processing about 46% of the total paddy. The remaining 54% was milled in cone type units. Individual ownership was the most common type of business organization. A majority of the mills were powered with diesel engines with an average of 11 hp for steel hullers and 42 hp for cone type mills. The average cone type mill was 11 years old and the average steel huller had been in operation for 13 years. Cone type mills are located in market centers while steel hullers are found in rural locations. Customers for cone type units are usually traders. Steel huller units are used almost exclusively for household requirements, usually milled in small lot sizes. Both mill types showed various degrees of underutilization, although exhibiting different patterns throughout the year. Cone type mills were usually better equipped and provided a wider range of services such as drying, storage, and handling for their customers than the steel huller units.

MILLING PADDY FROM ALTERNATIVE FARM LEVEL SYSTEMS

Total milled and head rice recovery rates obtained from cone type mills differed significantly from those processed through steel huller units in all areas. No significant differences in milling yields were observed between farm level systems I & IV (traditional and mechanized), although average values indicated higher yields from samples using the system employing mechanical threshing and drying, particularly when these samples were processed through cone type units. Head rice recovery rates from system IV (mechanical) proved statistically higher than from paddy obtained from the traditional system using manual harvesting, threshing, and drying. The finding was true for all mill types.

MONITORING ACTIVITIES

Based on 1 year of milling data, the largest capacity cone type rice mill showed the highest utilization rate (97%) followed by the rubber roll-steel huller combination (77%). The lowest utilization rates were recorded by the steel hullers, centrifugal huller, and the stone disc-steel huller combination mill. Seventy-one percent of all paddy samples gathered were of low quality and only 29% graded as high standard. High quality samples differed significantly in milling yields from those with high percentages of immature grains and cracked or fermented kernels. Rubber huller and cone type mills produced higher quality milled rice than steel huller units. Short grain varieties showed better milling characteristics than long grain or mixed varieties. The rubber roll mills exhibited better performance efficiencies than other types.

ECONOMIC ANALYSIS

Among village mills, the steel huller units had the lowest average total costs and the small single pass rubber roll unit the highest. The rubber roll-steel huller combination had the highest average revenue. At the commercial level, the rubber roll-steel huller combination had the highest profit per ton of paddy milled.

The results of the project indicate that a strong case can be made for modernizing the steel huller mill through the addition of a rubber roll huller.

REFERENCES

Arboleda, J. and D. B. de Padua. "Performance of Small Capacity Rice Mills." College of Agriculture, University of the Philippines, Los Baños. 1964.

Arboleda, J. "Improvement of the Kiskisan Rice Mill." IRRI Saturday Seminar, Department of Agricultural Engineering. July 1975.

Alkuino, J. "Utilization of Improved Rice Processing Facilities in Camarines Sur." M. S. Thesis. University of the Philippines at Los Baños. Nov. 1974.

Araullo, E. V., D. B. de Padua, and M. Graham. "Rice Postharvest Technology." International Development Research Centre. Ottawa, Canada. 1975.

Aspiras, R. A. "The Relationship Between Quality and Price in Philippine Wholesale Rice." IRRI Department of Agricultural Economics. 1965.

Camacho, I. R., V. G. Gayanilo, S. C. Andales, D. B. de Padua. "Comparative Performance Test of Rice Mills Using Rubber Roll and Stone Disc Hullers." Technical Bulletin No. 2. Department of Agricultural Engineering, University of the Philippines at Los Baños. 1975.

Duff, B. and Z. Toquero. "Factors Affecting the Efficiency of Mechanization in Farm Level Postproduction Systems." Paper prepared for presentation at a Workshop on Farm Tenure and Mechanization. UPLB Center for Policy and Development Studies. 1975.

Falcon, W. P. "The Green Revolution: Generations of Problems." American Journal of Agricultural Economics. Vol. 52 No. 5. 1970.

FAO. "Pilot Study on Paddy Losses in Thailand During Harvesting, Drying, and Threshing." Informal report. 1968.

Harris, K. L. and C. J. Lindblad. "Postharvest Grain Loss Assessment Methods." A draft manual on the evaluation and prevention of Postharvest Losses. GASGA London, 1978.

Hulse, J. H. "One Should Try to Improve the Existing Postharvest Systems Rather than Offering Radical New Ones." CERES Vol. 10 No. 6. 1977. (pp 25-28).

The International Rice Research Institute. "Data Series on Rice Statistics in the Philippines." Department of Agricultural Economics. December 1976.

Koga, Y. "Topics on the Postharvest State of Rice -- Are Small Rice Mills Wasteful." Agricultural Mechanization in Asia. Vol. VII No. 2. 1976.

Koga, Y. "The Present Status of Postharvest Rice Processing in Thailand and Prospects for Rural Industrialization through Cooperative Ventures in Such Processing." ESCAP/UNIDO Division of Industry. Bangkok. 1976.

Lele, U. J. "Modernization of the Rice Milling Industry -- Lessons from Past Performance." Economic and Political Weekly. Vol. V No. 28. New Delhi. 1970.

Manalabe, R. E., D. B. de Padua, and E. Lozada. "Milling Parameters for Maximum Milling Yield and Quality of Milled Rice." SEARCA Rice Post-Harvest Technology Workshop, Bangkok. 1978.

Pimentel, D. "World Food, Pest Losses and the Environment." American Association for the Advancement of Science. Selected Symposium. Westview Press. Colorado 1977.

Padua, D. B. de "Rice Postproduction Handling and Processing: Its Significance to Agricultural Development." SEARCA Workshop on Accelerating Agricultural Development. Los Baños. 1976.

Paras, A. "Rice Milling Principles and Systems." Institute of Agricultural Engineering and Technology. University of the Philippines at Los Baños. 1976.

Parpia, H. A. B. "More Than Food Would Be Saved." CERES. Vol. 10 No. 6. 1977.

Rapusas, R. S., D. B. de Padua and E. P. Lozada. "Pre-Drying Handling of High Moisture Paddy." SEARCA Rice Postharvest Workshop, Bangkok. 1978.

Ruiten, H. V. "Manual of Laboratory Exercises on Rice Postproduction Technology." Agricultural Engineering Department, University of the Philippines at Los Baños (n.d.).

Ruiten, H. V. "The Milling of Paddy: Parts I and II." Department of Agricultural Engineering, University of the Philippines at Los Baños (n.d.).

Satake Engineering Co., Ltd. "Catalog on Rice Processing Equipment." Tokyo (n.d.).

Samson, B. and B. Duff. "The Pattern and Magnitude of Field Grain Losses in Paddy Production." IRRI Department of Agricultural Engineering. 1973.

Sison, W. M., B. C. Sarmiento, D. C. Galvez and E. G. Magno, Jr. "Comparative Study and Test Evaluation of Different Village Type Single Pass Rice Mills." National Grains Authority. Quezon City. 1976.

Spensley, P. C. "An Eye on the Granary." CERES. Vol. 10, No. 6. 1977.

Somboonsub, Nopmanee. "Rice Milling Technology and Some Economic Implications: The Case of Nakom Pathom, Thailand." M.A. Thesis. Faculty of Economics. Thammasat University, Bangkok. 1974.

Spurgeon, D. "A Systems Approach to Postharvest Technology." Hidden Harvest. International Development Research Centre. Ottawa. 1975.

Roberts, R. L. and T. Wasserman. "Effect of Milling Conditions on Yields, Milling Time and Energy Requirements in a Pilot Scale Engelberg Mill." Journal of Food Scince. Vol. 42. No. 3. 1977.

Toquero, Z. and B. Duff. "Survey of Postproduction Practices Among Rice Farmers in Central Luzon." IRRI Agricultural Engineering Department. Los Baños. 1974.

Toquero, Z. and B. Duff. "A Profile of Rice Postproduction Industry in Camarines Sur." presented at a workshop on Postproduction Technology. Naga. 1976.

Toquero, Z., C. Maranan, L. Ebron and B. Duff. "An Empirical Assessment of Alternate Field-Level Rice Postproduction Systems in Nueva Ecija, Philippines." IRRI Agricultural Engineering Department. 1976.

Toquero, Z., C. Maranan, L. Ebron and B. Duff. "Assessing Quantitative and Qualitative Losses in Rice Postproduction Systems. FAO Workshop on Postharvest Losses. Alor Star, Malaysia. 1977.

Toquero, Z. and B. Duff. "Survey of Rice Milling and Processing Practices Among Rice Millers in Central Luzon." IRRI Department of Agricultural Engineering. 1977.

Toquero, Z., B. Duff, T. A. Lacsina and Y. Hayami. "Estimating the Elasticities of Home Consumption and Marketable Surplus for a Subsistence Crop: Rice in the Philippines." American Journal of Agricultural Economics. November 1975.

Yamashita, R. "Report on Drying, Storage and Milling in the Philippines." Agricultural Process Engineering Report No. 11. Faculty of Agriculture, Kobe University. Japan. 1975.

Appendix table 1. Estimated costs for alternate postproduction systems based on contractual labor, Libon, Albay, wet season, 1976-77.

Item	System [a] I	II	III	IV
		$/t [b]		
HARVESTING EXPENSES				
Cash [c]	-	-	-	-
Non-cash [d]	[e]	[e]	12.92	12.92
THRESHING EXPENSES				
Cash	-	-	2.08	2.08
Non-cash	17.17	17.17	3.27	3.27
DRYING EXPENSES				
Cash	-	6.30	-	6.30
Non-cash	1.56	0.60	1.56	0.60
TOTAL EXPENSES				
Cash	-	6.30	2.08	8.38
Non-cash	18.73	17.77	17.75	16.79
TOTAL	18.73	24.07	19.83	25.17

[a] See footnote on Table 10a for description of systems.

[b] Based on exchange rate of ₱7.40/US$1.

[c] Cash cost includes cost of fuel and oil, depreciation, interest on capital investment and repair and maintenance.

[d] Non-cash cost includes cost of labor usually paid in kind.

[e] Included in threshing fee.

Appendix table 2. Estimated costs for alternate postproduction systems based on contractual labor, Libon, Albay, dry season, 1976-77.

Item	System [a] I	II	III	IV
		$/t[b]		
HARVESTING EXPENSES				
Cash[c]	-	-	-	-
Non-cash [d]	[e]	[e]	8.86	8.86
THRESHING EXPENSES				
Cash	-	-	2.08	2.08
Non-cash	17.47	17.47	1.55	1.55
DRYING EXPENSES				
Cash	-	6.30	-	6.30
Non-cash	1.57	0.67	1.57	0.67
TOTAL EXPENSES				
Cash	-	6.30	2.08	8.38
Non-cash	19.04	18.14	11.98	11.08
TOTAL	19.04	24.44	14.06	19.46

[a] See footnote on Table 10a for description of systems.

[b] Based on exchange rate of ₱7.40/US$1.

[c] Cash cost includes cost of fuel and oil, depreciation, interest on capital investment and repair and maintenance.

[d] Non-cash cost includes cost of labor usually paid in kind.

[e] Included in threshing fee.

Appendix table 3. Estimated costs for alternate postproduction systems based on contractual labor, San Jose, Camarines Sur, 1976-77.

Item	System [a] I	II	III	IV
	$/t [b]			
HARVESTING EXPENSES				
Cash [c]	-	-	-	-
Non-cash [d]	[e]	[e]	5.79	5.79
THRESHING EXPENSES				
Cash	-	-	2.08	2.08
Non-cash	18.00	18.00	2.60	2.60
DRYING EXPENSES				
Cash	-	6.30	-	6.30
Non-cash	1.78	0.66	1.78	0.66
TOTAL EXPENSES				
Cash	-	6.30	2.08	8.38
Non-cash	19.78	18.66	10.17	9.05
TOTAL	19.78	24.96	12.25	17.43

a/ See footnote on Table 10a for description of systems.

b/ Based on exchange rate of ₱7.40/US$1.

c/ Cash cost includes cost of fuel and oil, depreciation, interest on capital investment and repair and maintenance.

d/ Non-cash cost includes cost of labor usually paid in kind.

e/ Included in threshing fee.

Appendix table 4. Estimated costs for alternate postproduction systems based on contractual labor, Buhi, Camarines Sur, 1976-77.

Item	System [a] I	II	III	IV
			$/t [b]	
HARVESTING EXPENSES				
Cash[c]	-	-	-	-
Non-cash[d]	[e]	[e]	5.30	5.30
THRESHING EXPENSES				
Cash	-	-	2.08	2.08
Non-cash	24.78	24.78	2.19	2.19
DRYING EXPENSES				
Cash	-	6.30	-	6.30
Non-cash	1.43	0.61	1.43	0.61
TOTAL EXPENSES				
Cash	-	6.30	2.08	8.38
Non-cash	26.21	25.39	8.92	8.10
TOTAL	26.21	31.69	11.00	16.48

[a] See footnote on Table 10a for description of systems.

[b] Based on exchange rate of ₱7.40/US$1.

[c] Cash cost includes cost of fuel and oil, depreciation, interest on capital investment and repair and maintenance.

[d] Non-cash cost includes cost of labor usually paid in kind.

[e] Included in threshing fee.

Appendix table 5. Estimated costs for alternate postproduction systems based on actual labor inputs, Libon, Albay, wet season, 1976-77.

Item	System [a]			
	I	II	III	IV
	$/t [b]			
HARVESTING EXPENSES				
Cash [c]	-	-	-	-
Non-cash [d]	12.92	12.92	12.92	12.92
THRESHING EXPENSES				
Cash	-	-	2.08	2.08
Non-cash	9.51	9.51	3.27	3.27
DRYING EXPENSES				
Cash	-	6.30	-	6.30
Non-cash	1.56	0.60	1.56	0.60
TOTAL EXPENSES				
Cash	-	6.30	2.08	8.38
Non-cash	23.99	23.03	17.75	16.79
TOTAL	23.99	29.33	19.83	25.17

[a] See footnote on Table 10a for description of systems.

[b] Based on exchange rate of ₱7.40/US$1.

[c] Cash cost includes cost of fuel and oil, depreciation, interest on capital investment and repair and maintenance.

[d] Non-cash cost includes cost of labor usually paid in kind.

Appendix table 6. Estimated costs for alternate postproduction systems based on actual labor inputs, Libon, Albay, dry season, 1976-77.

Item	System [a] I	II	III	IV
	$/t[b]			
HARVESTING EXPENSES				
Cash[c]	-	-	-	-
Non-cash[d]	8.86	8.86	8.86	8.86
THRESHING EXPENSES				
Cash	-	-	2.08	2.08
Non-cash	8.53	8.53	1.55	1.55
DRYING EXPENSES				
Cash	-	6.30	-	6.30
Non-cash	1.57	0.67	1.57	0.67
TOTAL EXPENSES				
Cash	-	6.30	2.08	8.38
Non-cash	18.96	18.06	11.98	11.08
TOTAL	18.96	24.36	14.06	19.46

[a] See footnote on Table 10a for description of systems.

[b] Based on exchange rate of ₱7.40/US$1.

[c] Cash cost includes cost of fuel and oil, depreciation, interest on capital investment and repair and maintenance.

[d] Non-cash cost includes cost of labor usually paid in kind.

Appendix table 7. Estimated costs for alternate postproduction systems based on actual labor inputs, San Jose, Camarines Sur, 1976-77.

Item	System [a] I	II	III	IV
	$/t [b]			
HARVESTING EXPENSES				
Cash [c]	-	-	-	-
Non-cash [d]	5.79	5.79	5.79	5.79
THRESHING EXPENSES				
Cash	-	-	2.08	2.08
Non-cash	6.16	6.16	2.60	2.50
DRYING EXPENSES				
Cash	-	6.30	-	6.30
Non-cash	1.78	0.66	1.78	0.66
TOTAL EXPENSES				
Cash	-	6.30	2.08	8.38
Non-cash	13.73	12.61	10.17	9.05
TOTAL	13.73	18.91	12.25	17.43

[a] See footnote on Table 10a for description of systems.

[b] Based on exchange rate of ₱7.40/US$1.

[c] Cash cost includes cost of fuel and oil, depreciation, interest on capital investment and repair and maintenance.

[d] Non-cash cost includes cost of labor usually paid in kind.

Appendix table 8. Estimated costs for alternate postproduction systems based on actual labor inputs, Buhi, Camarines Sur, 1976-77.

Item	System [a] I	II	III	IV
	$/t [b]			
HARVESTING EXPENSES				
Cash [c]	-	-	-	-
Non-cash [d]	5.30	5.30	5.30	5.30
THRESHING EXPENSES				
Cash	-	-	2.08	2.08
Non-cash	9.15	9.15	2.19	2.19
DRYING EXPENSES				
Cash	-	6.30	-	6.30
Non-cash	1.43	0.61	1.43	0.61
TOTAL EXPENSES				
Cash	-	6.30	2.08	8.38
Non-cash	15.88	15.06	8.92	8.10
TOTAL	15.88	21.36	11.00	16.48

[a]/See footnote on Table 10a for description of systems.

[b]/Based on exchange rate of ₱7.40/US$1.

[c]/Cash cost includes cost of fuel and oil, depreciation, interest on capital investment and repair and maintenance.

[d]/Non-cash cost includes cost of labor usually paid in kind.

Appendix table 9. Total milled and head rice recovery for eight milling systems, wet season, Bicol River Basin area, 1976-77.

Milling system	Milling recovery	Head rice	Broken rice[a]
		percent	
Rubber roll single pass	69.53	60.69	38.29
Rubber roll multipass	69.46	77.74	21.87
Rubber roll-steel huller combination	68.49	63.67	35.88
Cone type (av.)	(68.37)	(74.53)	(24.62)
Concina RM	69.98	72.25	26.52
Gonzales RM	68.02	78.35	21.14
Libmanan RM	70.79	73.13	25.91
Nazarrea RM	64.72	74.41	24.91
Steel huller (av.)	(64.5)	(29.14)	(68.89)
Dycoco RM	63.55	21.57	77.21
Olaño RM	64.38	38.71	59.49
Ruta RM	63.27	29.89	67.65
Torres RM	68.80	26.42	71.21
Stone disc-steel huller combination	65.90	53.39	43.96
Multiple steel huller	66.81	44.17	53.78
IRRI experimental single pass steel huller	64.49	54.64	41.04

[a] Brewer's rice not included.

Appendix table 10. Total milled and head rice recovery for nine milling systems, dry season, Bicol River Basin area, 1976-77.

Milling system	Milling recovery	Head rice	Broken rice[a]
		percent	
Rubber roll single pass	71.53	67.17	31.67
Rubber roll multipass	68.02	76.17	23.07
Rubber roll-steel huller combination	69.22	77.72	21.14
Cone type (av.)	(69.75)	(77.20)	(21.73)
Concina RM	73.73	80.62	18.61
Gonzales RM	67.76	73.42	24.87
Libmanan RM	70.24	79.65	19.66
Nazarrea RM	67.28	75.13	23.80
Steel huller (av.)	(68.05)	(54.45)	(43.73)
Dycoco RM	67.21	61.05	37.95
Olaño RM	70.55	57.72	39.95
Ruta RM	63.16	34.13	63.46
Torres RM	71.28	64.91	33.57
Stone disc-steel huller combination	67.87	55.13	40.91
Multiple steel huller	69.18	58.16	39.68
IRRI experimental single pass steel huller	65.24	54.67	41.66
Centrifugal huller	70.49	73.17	26.16

[a] Brewer's rice not included.

Appendix table 11. Hulling and wholeness coefficients and hulling efficiency for six alternative milling systems, wet season, Bicol River Basin area, 1976-77.

Milling system	Hulling coefficient[a]	Wholeness coefficient[a]	Hulling efficiency[a]
		percent	
Rubber roll single pass	.92	.82	81.79
Rubber roll multipass	N.A.	N.A.	N.A.
Rubber roll-steel huller combination	.78	.89	69.17
Cone type (av.)	(.805)	(.877)	(70.65)
Concina RM	.84	.88	74.52
Gonzales RM	.81	.88	70.48
Libmanan RM	.79	.88	69.96
Nazarrea RM	.78	.87	67.64
Stone disc-steel huller combination	.60	.85	57.10
Centrifugal huller	N.A.	N.A.	N.A.

[a] See Appendix C for definition.

Appendix table 12. Hulling and wholeness coefficients and hulling efficiency for six alternative milling systems, dry season, Bicol River Basin, 1976-77.

Milling system	Hulling coefficient[a]	Wholeness coefficient[a]	Hulling efficiency[a]
		percent	
Rubber roll single pass	.85	.97	83.04
Rubber roll multipass	.78	.92	71.92
Rubber roll-steel huller combination	.96	.95	91.09
Cone type (av.)	(.675)	(.867)	(58.49)
Concina RM	.60	.83	49.51
Gonzales RM	.72	.80	57.53
Libmanan RM	.60	.91	54.49
Nazarrea RM	.78	.93	72.44
Stone disc-steel huller combination	.42	.85	35.66
Centrifugal huller	.96	.72	70.23

[a] See Appendix C for definition.

Appendix table 13. Yearly fixed cost for different investment costs of rubber roll hullers, 1978.

Investment cost[a]	Interest[b]	Depreciation[c]	Total fixed cost
		US$	
540.54	97.30	108.11	205.41
810.81	145.95	162.16	308.11
1081.08	194.59	216.22	410.81
1351.35	243.24	270.27	513.51
1621.62	291.89	324.32	616.22
1891.89	340.54	378.38	718.92
2162.16	389.19	432.43	821.62
2432.43	437.84	486.49	924.32
2702.70	486.49	540.54	1027.03

[a] Investment cost for hulling head only.

[b] 18% per annum interest rate.

[c] 5 years life with no salvage value.

Appendix table 14. Fixed cost per ton for different investment costs of rubber roll huller at different utilization rates, 1978.

Investment cost	Utilization rates			
	25% (864 t)	50% (1,728 t)	75% (2,592 t)	100% (3,456 t)
	$/t			
540.54	0.24	0.12	0.08	0.06
810.81	0.36	0.18	0.12	0.09
1081.08	0.48	0.24	0.16	0.12
1351.35	0.59	0.30	0.20	0.15
1621.62	0.71	0.36	0.24	0.18
1891.89	0.83	0.42	0.28	0.21
2162.16	0.95	0.48	0.31	0.24
2432.43	1.07	0.54	0.35	0.27
2702.70	1.19	0.59	0.39	0.30

Note: Values in parentheses indicate the yearly quantity of paddy processed at stated rate of utilization. Capacity of the hulling head is 1 t/h of paddy.

Appendix Table 15. Variable costs for different investment levels of rubber roll huller, 1978.[a/]

Item	Investment cost ($540.54 to 2702.70)	
	₱	($)
Fuel and lubricants[b/]	1,886	(254.86)
Repair and maintenance[c/]	6,826	(922.43)
Labor[d/]	11,750	(1587.84)
Total variable cost	20,462	(2765.1[illegible])
Average variable cost	23.68	(3.20)

a/ Calculated at 25% utilization.

b/ Fuel - 1.5 l/h at $0.17/l

Oil and grease - $32.43/yr.

c/ 40 tons paddy/pair of rubber roll at $42.70/pair

d/ 20% of gross income - milling recovery is set at 68%.

Appendix table 16. Average total cost for different investment cost of rubber roll huller at different utilization rates, 1978.

Investment cost	Utilization rates			
	25% (864 t)	50% (1,728 t)	75% (2,592 t)	100% (3,456 t)
	$/t			
540.54	3.44	3.32	3.28	3.26
810.81	3.56	3.38	3.32	3.29
1081.08	3.68	3.44	3.36	3.32
1351.35	3.79	3.50	3.40	3.35
1621.62	3.91	3.56	3.44	3.38
1891.89	4.03	3.62	3.48	3.41
2162.16	4.15	3.68	3.51	3.44
2432.43	4.27	3.74	3.55	3.47
2702.70	4.39	3.80	3.59	3.50

APPENDIX B

Equipment Purchase Agreement

This agreement entered into by and between the Bicol River Basin Development Program, represented by its Acting Program Director, _____, hereinafter referred to as the BRBDP,

and

the _____ Samahang Nayon of _____ represented by its president, _____ hereinafter referred to as the Samahang Nayon,

and

the _____ represented by its General Manager, _____ hereinafter referred to as the _____ _____

and

The International Rice Research Institute represented by its authorized representative _____ hereinafter referred to as the IRRI,

and

The University of the Philippines at Los Baños, represented by its authorized representative _____ hereinafter referred to as the UPLB.

WITNESSETH

WHEREAS, the BRBDP recognizes the importance of cooperative research in pursuing its objective pertaining to integrated regional development;

WHEREAS, a cooperative research project entitled "Rice Post-production Pilot Demonstration and Applied Research Trials", hereinafter referred to as PROJECT, has been initiated by IRRI/UPLB in cooperation with the BRBDP and duly funded by a grant from U.S. Agency for International Development (USAID);

WHEREAS, the BRBDP, International Rice Research Institute (IRRI) and the University of the Philippines at Los Baños (UPLB), has entered into a Memorandum of Agreement to implement the PROJECT;

WHEREAS, the BRBDP desires to increase grains production through the use of improved postproduction machinery and technology;

WHEREAS, the IRRI has development equipment for use in small farms, an axial flow thresher and a twin bed batch type dryer which can significantly reduce losses in both quality and quantity of paddy from harvesting and delivery to the rice mill;

WHEREAS, the Samahang Nayon desires to acquire such equipment and use these for the benefit of its members;

WHEREAS, the Samahang Nayon agrees to cooperate with the IRRI/UPLB/BRBDP in the PROJECT to measure results from the use of post-production equipment and technology during two consecutive cropping seasons starting in 1976 and shall identify certain members who shall be involved;

WHEREAS, the _____ desires to assist the Samahang Nayon to acquire and pay for said postproduction equipment to cooperate in the implementation of the PROJECT;

NOW THEREFORE, it is mutually agreed by and between the parties hereto as follows:

1. BRBDP shall implement the PROJECT in accordance with the aforesaid Memorandum of Agreement.

2. BRBDP will provide to the Samahang Nayon the following equipment:

   one unit - Axial flow thresher (IRRI design) with 10 HP Briggs and Stratton gasoline engine with lighting circuit.

   one unit - Double bed batch type dryer (IRRI design) with 3 HP Briggs and Stratton gasoline engine.

3. The Samahang Nayon through the _____ will pay a total amount of ₱ _____ to BRBDP for the equipment plus interest at the rate of eight percent (8%) per annum on the outstanding balance as shown in the Annex A and in the following manner:

   a) The amount of ₱ _____ representing interest on the outstanding principal during a one (1) year grace period, payable after the first harvest from the signing of the agreement. However, should the total amount of such payment be less than the amount stipulated, the Samahang Nayon will make a lump sum payment of such deficiency to BRBDP not later than the anniversary date of the signing of this agreement.

b) The remainder plus the interest will be in ten (10) equal semi-annual installments. The amortization payments will come from fees collected from the use of the thresher and dryer as hereinafter provided.

4. The Samahang Nayon will collect from the users of the equipment the following:

a) Not less than four (4) cavans of paddy for each 100 cavans of paddy threshed.

b) Not less than four (4) cavans of palay for each 100 cavans of paddy dried during the wet season. For the dry season an appropriate rate will be established by Samahang Nayon.

5. The Samahang Nayon will promptly deliver to _____ all paddy collected from members for the use of the equipment under No. 3 above.

6. The _____ will promptly remit to BRBDP and Samahang Nayon respectively the liquidated money value of paddy delivered by the Samahang Nayon under No. 5 above in the following manner:

a) Forty percent (40%) of the value of all paddy collected as fees from the members under No. 4 above to BRBDP for the account of Samahang Nayon to be applied towards amortization of the cost of the equipment.

b) The remainder, or sixty percent (60%), to the Samahang Nayon to pay for the cost of operating and maintaining the equipment.

7. The Samahang Nayon shall purchase common property insurance on the equipment, the premium for which shall be taken from its existing funds, if sufficient. If its fund be not sufficient, however, the necessary premium shall be taken from its 60% share on the proceed of operation, after deducting necessary operating and maintenance expenses. Such insurance should be purchased, preferably after the first harvest, but in no case later than the anniversary date of this Agreement.

8. The Samahang Nayon will maintain detailed and up-to-date records on income and costs for the utilization of the equipment in forms and in manner prescribed by the PROJECT. Said book of account shall be made available for inspection by the IRRI/UPLB Team and an authorized representative of the BRBDP.

9. The Samahang Nayon will give priority in the use of thresher and dryer to cooperator members involved in the PROJECT.

10. The Samahang Nayon will require cooperator members to carefully and fully follow the instruction of the IRRI/UPLB/BRBDP personnel who will supervise them, and to deliver to the _____ all paddy produced under the PROJECT.

11. The milling level sub-team shall accumulate paddy produced under the PROJECT into composite lots prescribed by IRRI/UPLB/BRBDP and will mill each lot separately to determine milling yield and quality.

12. In case the Samahang Nayon fails to make the initial and/or any amortization payments as provided in this agreement, the _____ shall assume such defaulted payment or payments as guarantor. (This payment covers only the funds generated from the use of the machine).

13. In case the Samahang Nayon and/or the _____ fails to make four (4) consecutive installments, including the grace period within the period stipulated, BRBDP shall have the option to reposses all the equipment provided under this agreement and both (SN & _____) agree to deliver possession of the equipment on demand. However, the BRBDP may postpone the payment of any installment falling due, should any occurrence of force mejeure, not adequately compensated by insurance, such as typhoon destruction, civil orders, pest infestation, prevent the Samahang Nayon from normally operating the equipment. To avail of this privilege, however, the Samahang Nayon should make a request in writing, citing the specific reasons, therefore.

Done at _____, this _____ day of _____.

BICOL RIVER BASIN DEVELOPMENT PROGRAM

_____

_____ Samahang Nayon

_____
President

_____

_____
General Manager, _____

_____
IRRI

_____
UPLB

WITNESS:

_____
Governor, Albay

_____
Mayor, Libon, Albay

_____
BRBDP Member

APPENDIX C

Rice Processing Systems

There exist many levels of technology for processing of paddy prior to consumption. During the course of the Bicol rice postproduction project there was occasion to examine and evaluate several systems and their components in detail. This appendix illustrates and describes each of these in sufficient detail to highlight their distinguishing and most important features.

CONE TYPE MILLS

Figures C1 through C4 represent four alternative cone type mills that were examined in the course of the study. The conventional cone type mill is composed of a power drive, hullers, paddy and milled rice sifters, husk aspirator, paddy separators, bran aspirators, and rice whitening machines.

Paddy moves from a hopper through a paddy sifter to remove foreign material, heavy and light impurities, and weed seeds (many mills, while having precleaning equipment, did not always employ these machines). Following this process clean paddy is elevated to a hulling machine for husk removal and hull separation.

The huller used is the stone disc sheller type, which is composed of two discs coated with emery stone (Fig. C5), the lower disc rotating and the upper disc held stationary. The process produces a mixture of brown rice, unhulled paddy, hulls, coarse bran, and small broken brown rice. The huller discharges into a double layer sifter that separates coarse bran and small brokens from the mixture. The remaining products --- hull, unhulled paddy, and brown rice -- are passed through a husk aspirator (Fig. C6 & C7) to remove the loose husk.

The remaining unhulled paddy and brown rice passes into a compartment type separator (Fig. C8) that segregates the paddy from the brown rice using the differences in smoothness, density, and specific gravity of each product as the means for separation.

The unhulled paddy is reverted to the main huller or to a separate underrunner disc huller or a rubber roll return huller (see figures of each cone type system).

Brown rice is now ready for whitening in a vertical cone type whitening machine. The machine is a rotating, emery-coated, inverted cone (Fig. C9) revolving in a perforated screen housing. Rubber brakes are installed in the screen housing to maintain pressure that presses the grains against the cone and screen to enhance abrasive removal of the bran layer. The process yields undermilled rice, brewers rice, and dark colored bran.

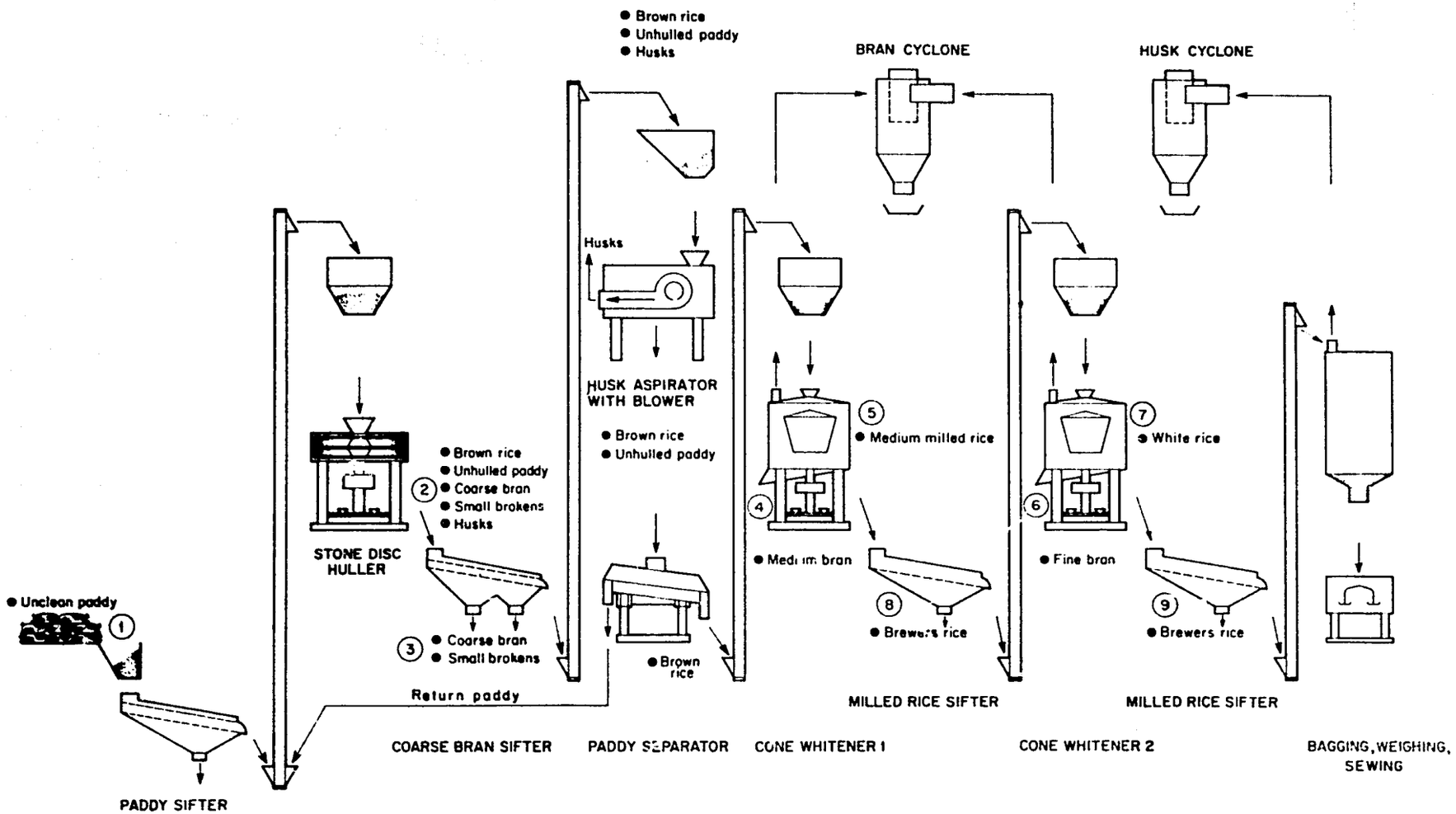

FIG.C-1. SCHEMATIC LAYOUT OF CONCINA RICE MILL.
San Jose, Camarines Sur

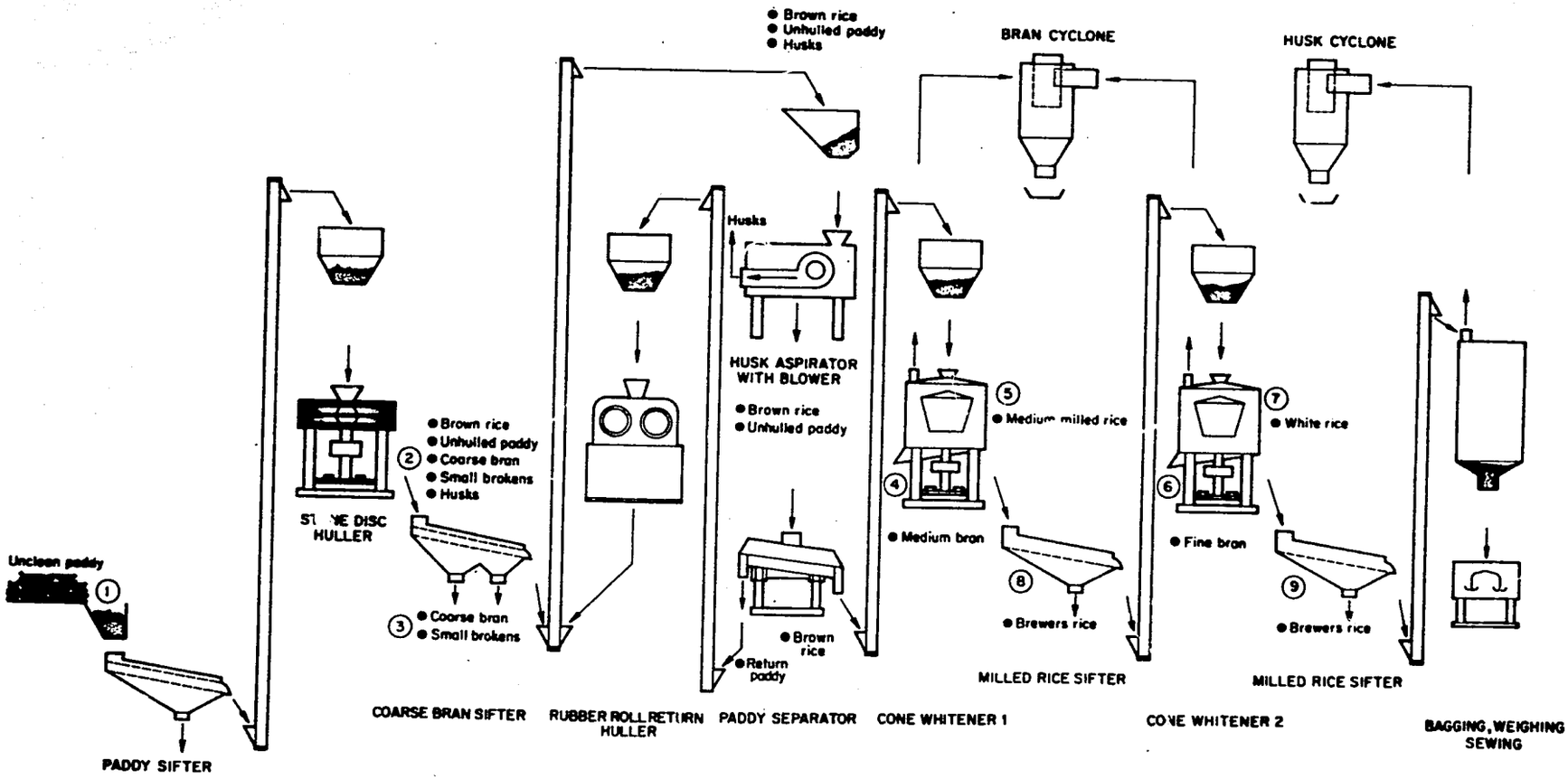

FIG. C-2. SCHEMATIC LAYOUT OF GONZALES RICE MILL.
Matacon Polangui, Albay

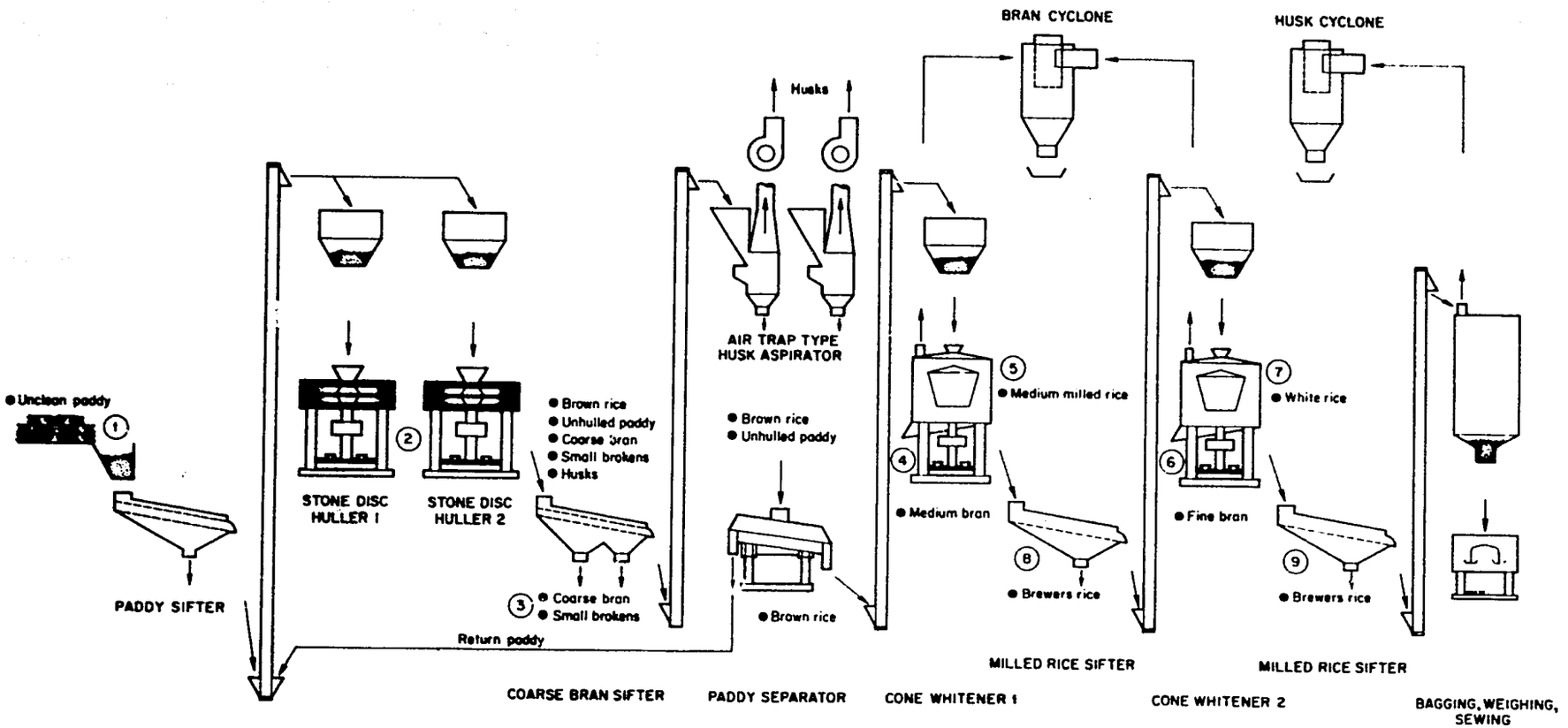

FIG. C-3. SCHEMATIC LAYOUT OF LIBMANAN RICE MILL.
Libmanan, Camarines Sur

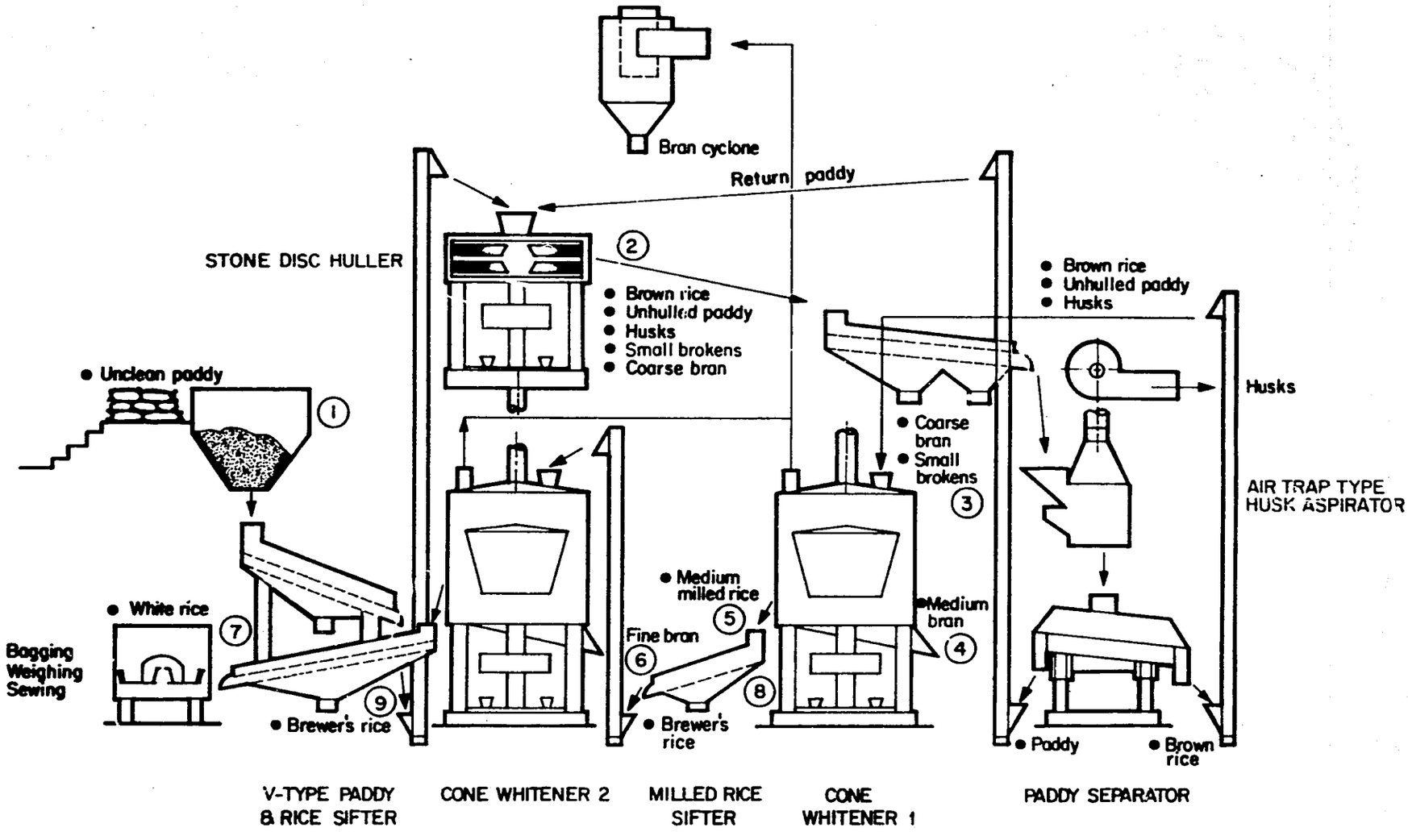

Figure C4. Schematic layout of Nazarrea rice mill.
Buhi, Camarines Sur

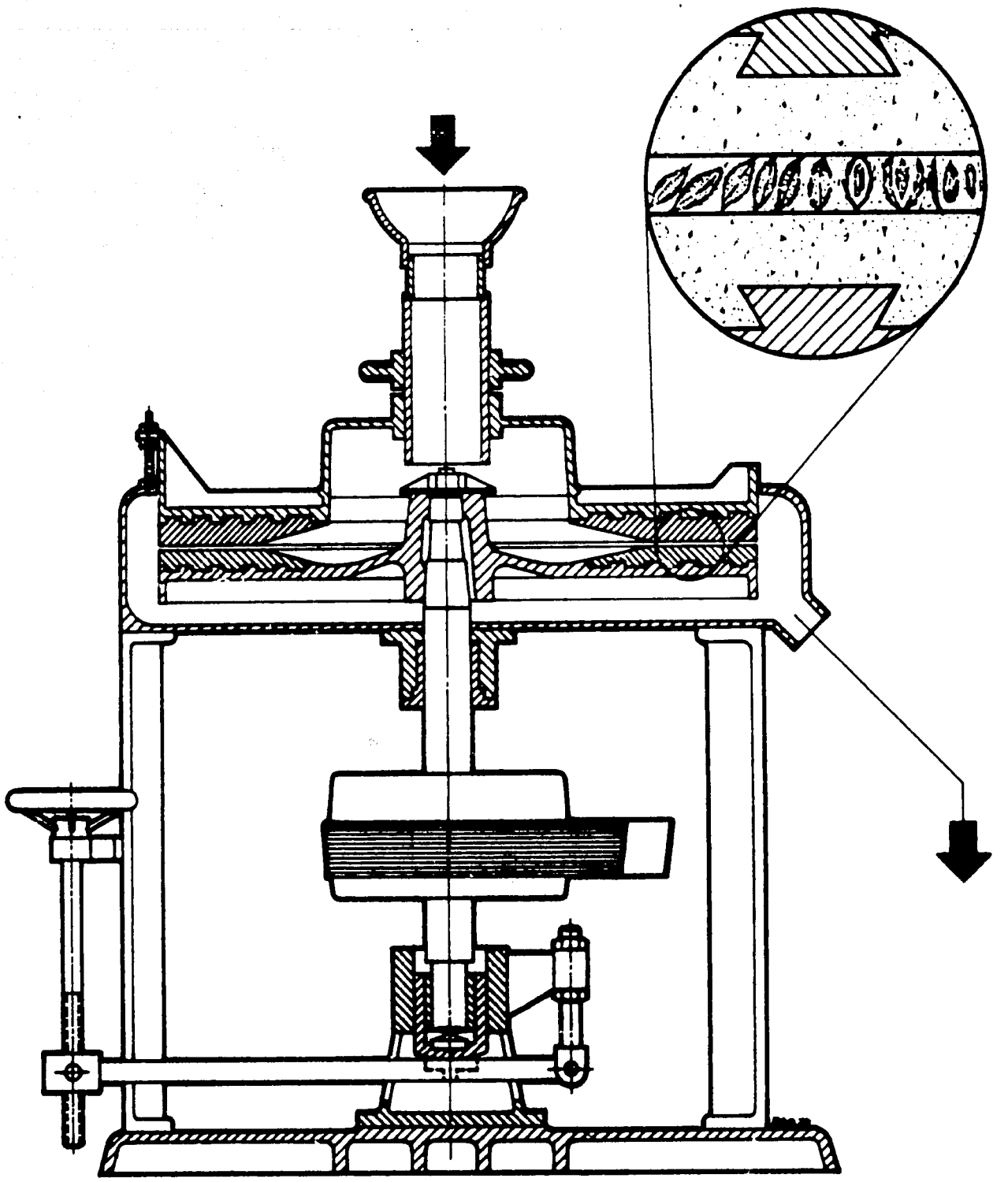

Figure C5. The stone disc huller.

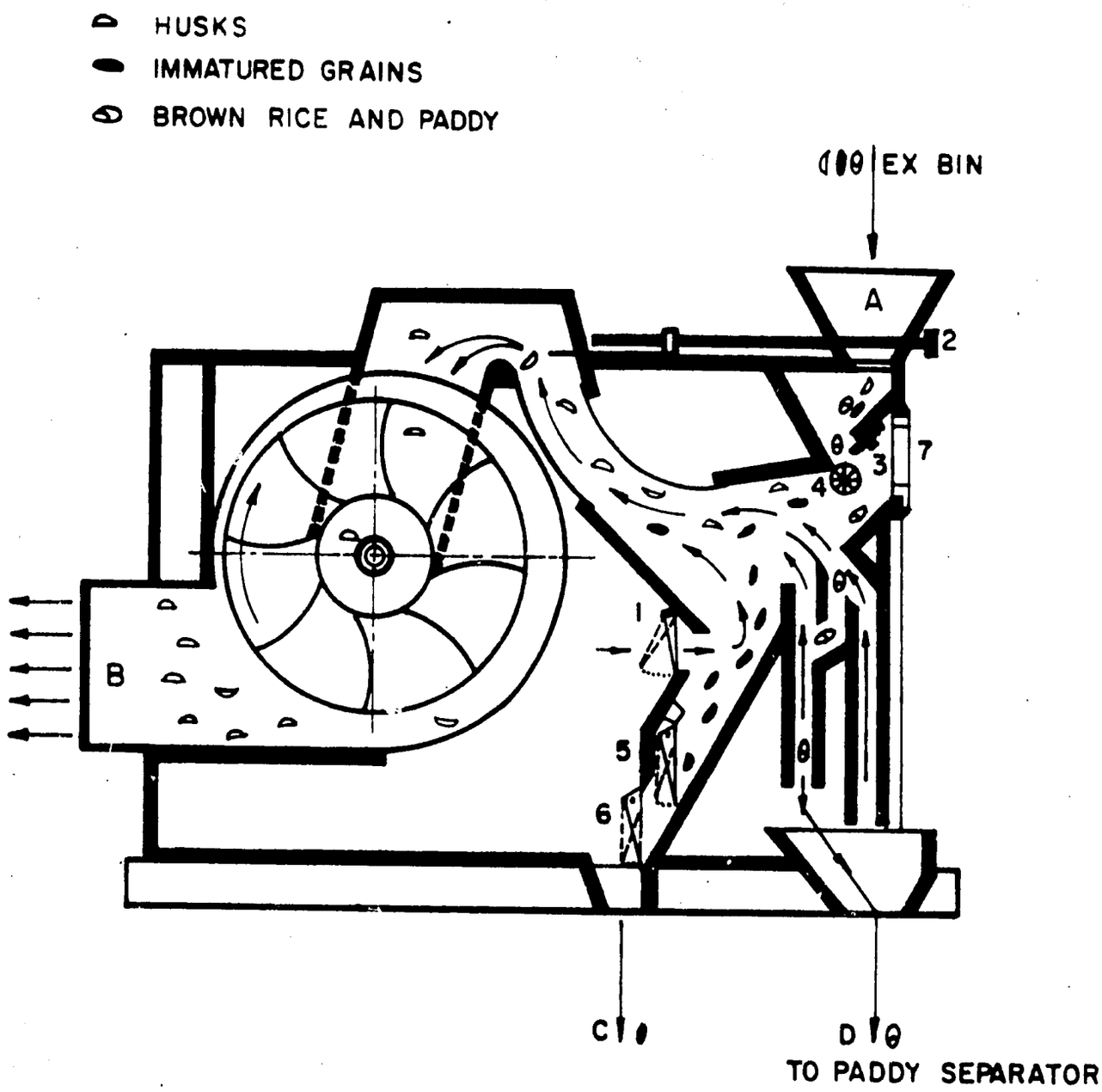

Figure C6. The husk aspirator with suction blower.

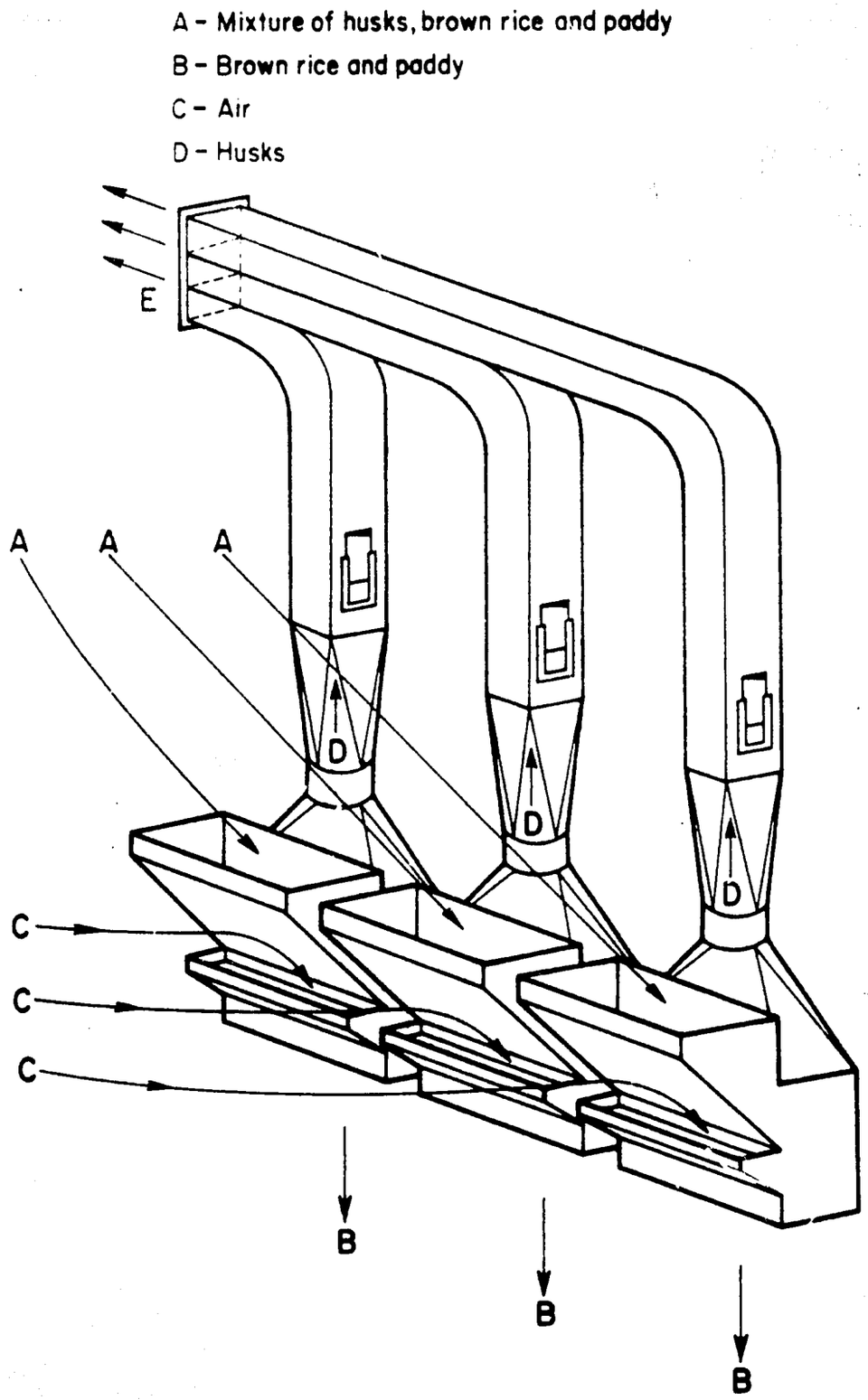

Figure C7. The air trap type husk aspirator.

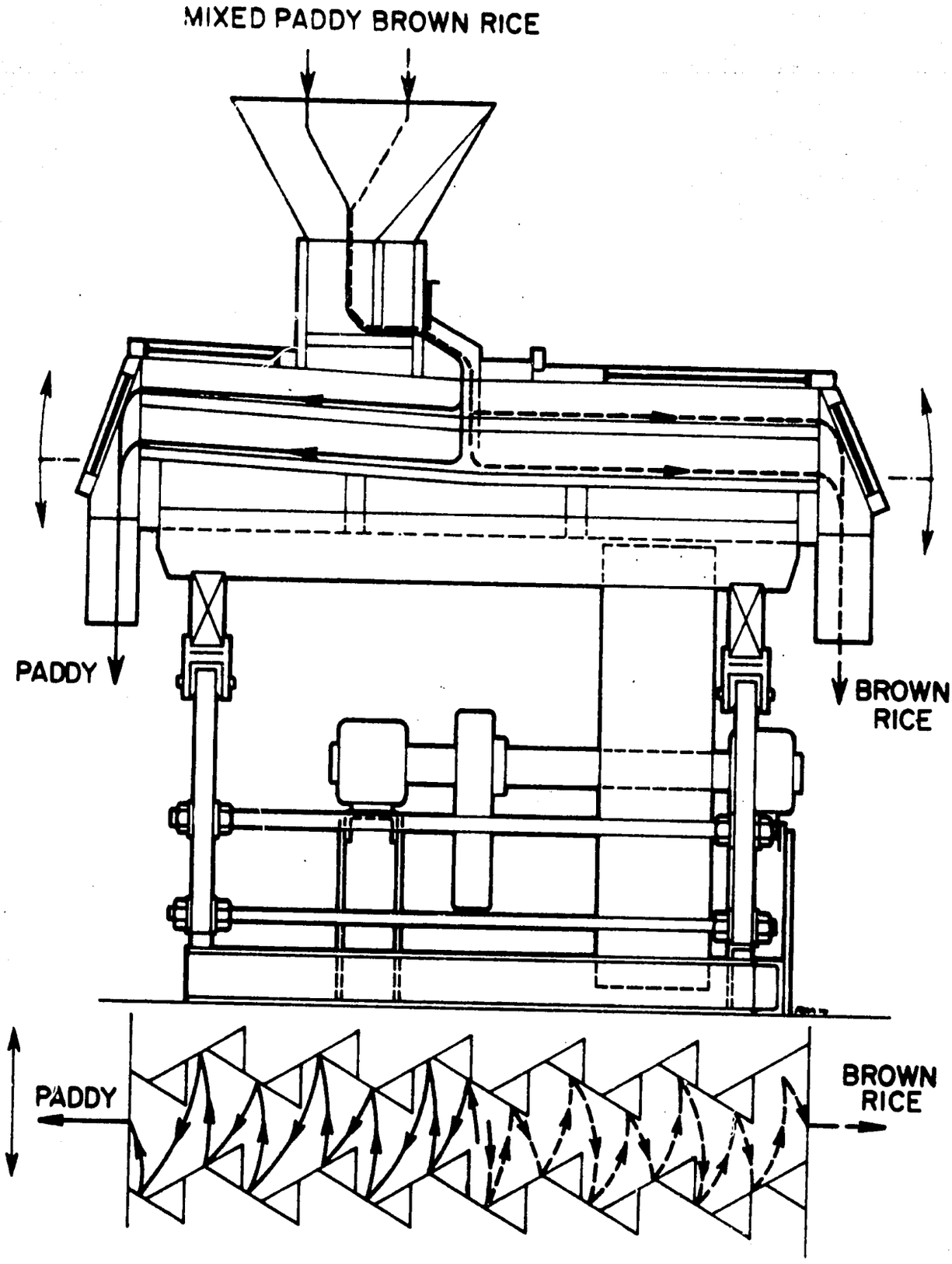

Figure C8. The compartment type paddy separator.

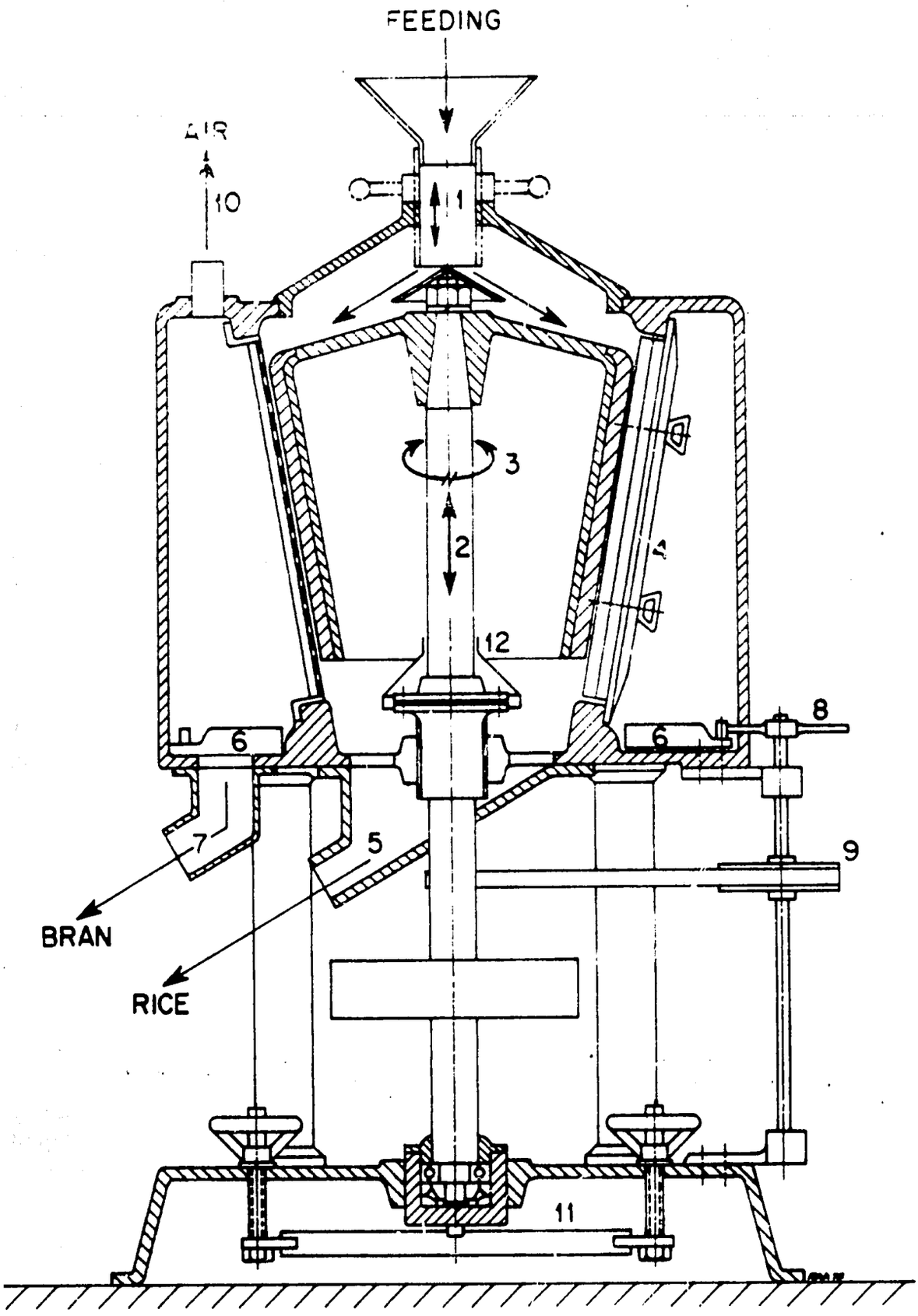

Figure C9. The whitening cone.

Bran is discharged through a separate unloading gate and rice moves to a sifter to separate brewers rice. A second whitening cone removes further bran to produce the desired milled rice product.

RUBBER ROLL MULTIPASS RICE MILL

This system is an example of a modern milling plant (Fig. C10). The plant incorporates modern cleaning, hulling, whitening, refining, and grading techniques. The unit uses push buttons on a central switch board to control the operation of each machine which is driven by an individual electric motor. The plant also has an automatic paddy weighing machine and an automatic milled rice bagging and sewing machine.

Paddy is elevated to a single drum paddy precleaner to remove dust, chaffs, hulls, weed seeds, and other impurities. Cleaned paddy then passes through a stoning machine to remove any stones found in the paddy.

Clean paddy is elevated and unloaded into two rubber roll hullers with a built-in husk aspirator (Fig. C11) that separate husks from brown rice.

Hulling is achieved by passing paddy through a pair of rubber rolls rotating in opposite directions. The rolls can be adjusted to accommodate varying grain sizes with reference to thickness. The difference in the speed of rotation of the two rolls (one roll being slower by 25%), the grain is subjected to a shearing force resulting in the stripping of the hull. The process produces a mixture of brown rice, unhulled paddy, and husks.

A tray-type paddy separator (Fig. C12), which separates using differences in the length, smoothness and weight of paddy and brown rice, produces three products: 1) brown rice, 2) mixed paddy and brown rice, 3) unhulled paddy.

The paddy is returned to the main huller for dehusking while the mixture of paddy and brown rice returns to the separator.

The brown rice is fed to a series of five whitening machines --- three abrasive (Fig. C13) and two friction (Fig. C14) type whiteners (RM, RM, RM, BS, BS).

The abrasive whitener is a horizontal abrasive roller constructed of a hollow steel coated with carborundum. A perforated steel cylinder surrounds the roll and weight-regulated valve controls discharge and internal pressure. The cylinder is made from several perforated plate arcs which have internal resistance baffles that are in contact with the rice. (The rubber brakes in the vertical cone whitener correspond to the resistance baffles in the horizontal abrasive whitener.)

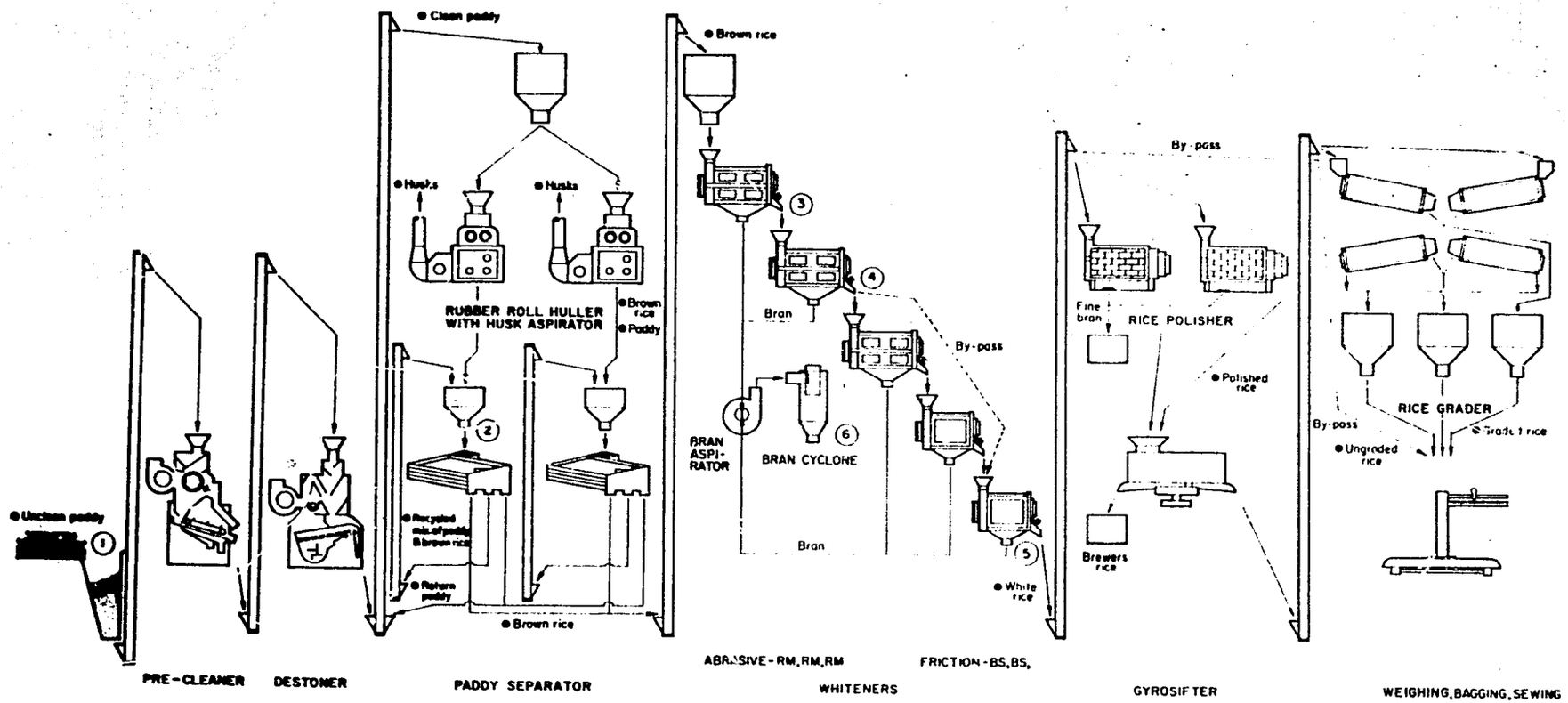

Figure C10. Schematic layout of a Japanese multipass rice mill with rubber roll and abrasive/friction whitener, 5 tph plant.

Bicol Seeds Incorporated

Libon, Albay

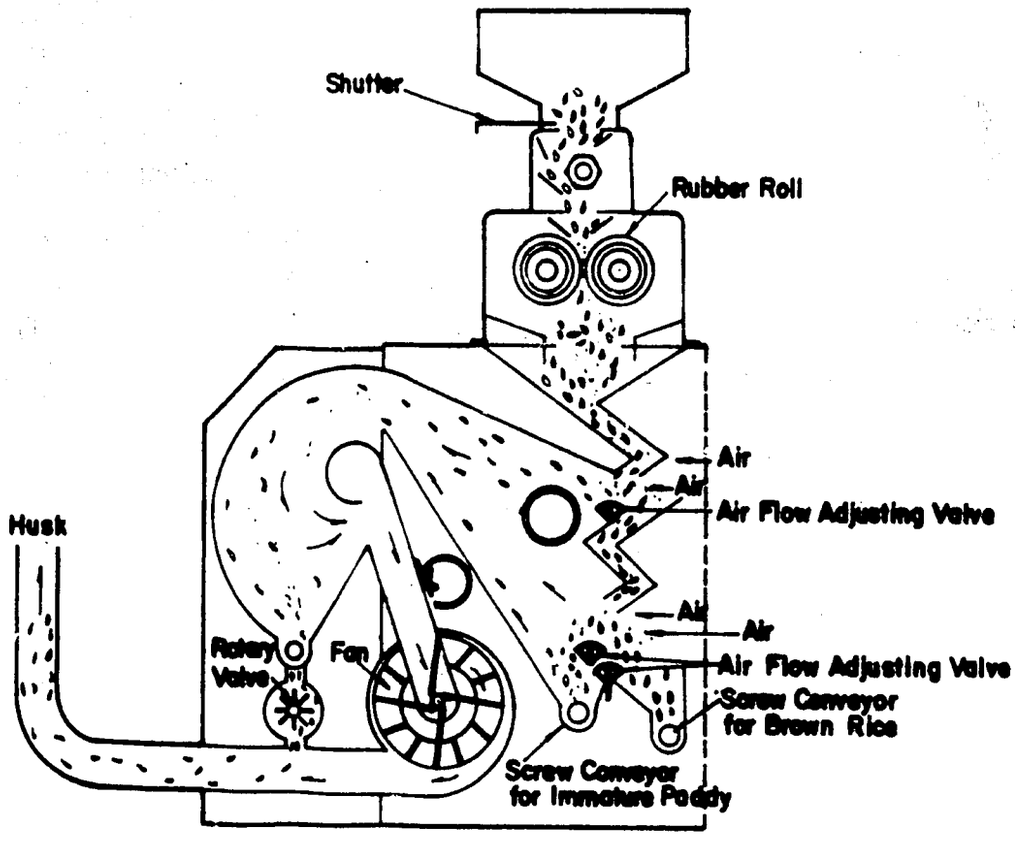

Figure CII. The rubber roll huller with husk aspirator.

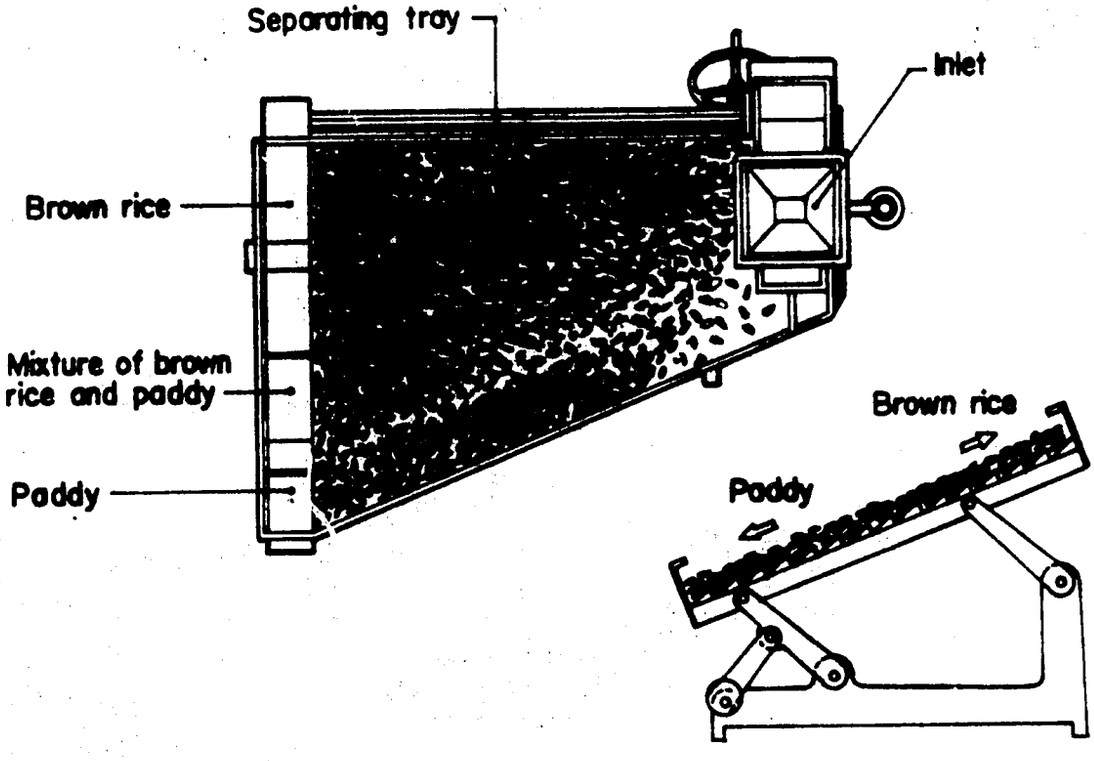

Figure C12. The tray type paddy separator.

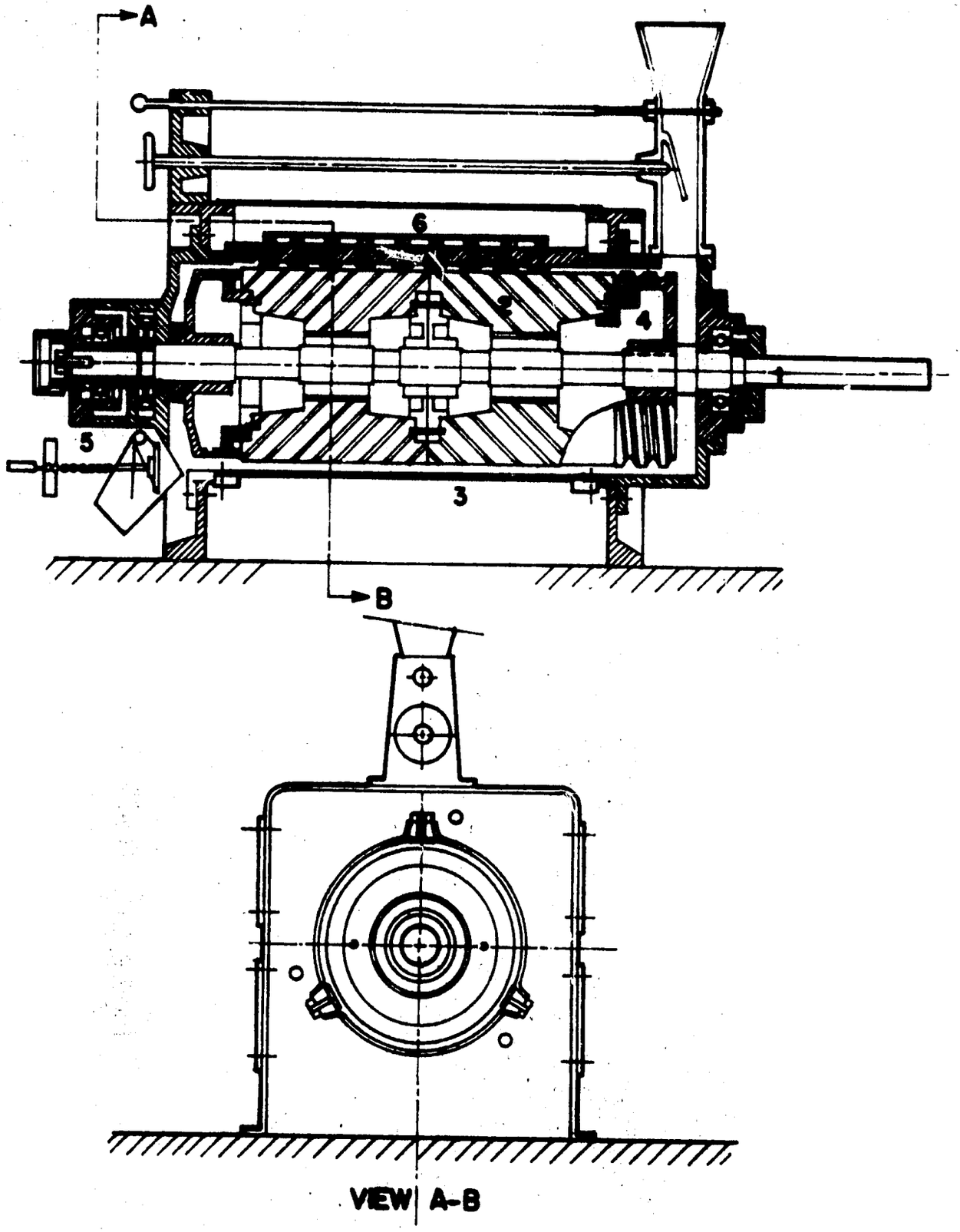

Figure C13. The abrasive whitener (RM).

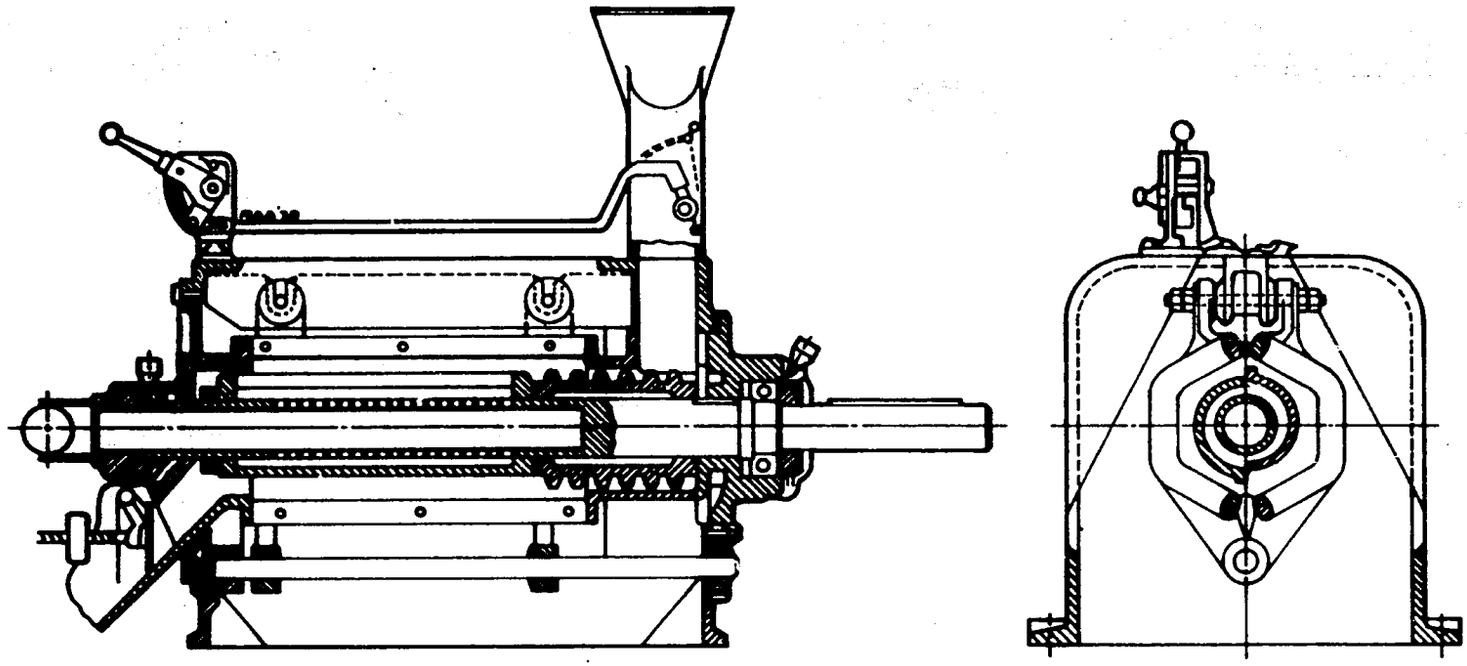

Figure C14. The friction whitening machine (BS).

The rice product from abrasive whitening looks dull, and the rice is subjected to further whitening.

The friction whitener consists of a perforated shaft rotating in a hexagonal chamber which is lined with perforated slotted screen. An air jet is passed through the hollow perforated shaft to cool the grain.

A rice polisher (Fig. C15) is also used for refining the final product. This machine consists of a horizontal drum type frame covered by leather strips rotating in a cylinder containing slotted perforation. In this process, loose bran is removed producing glossy white rice.

A gyro sifter is used to separate brewers rice and grading cylinders (trieurs (Fig. C16) to grade milled rice prior to bagging. A bagging machine is employed for automatic weighing of desired quantities of milled rice.

STEEL HULLER MILL

This mill is composed of power source, the steel huller apparatus, a two-stage rice sifter and a bran separator to clean the rice (Figs. C17 and C18). Unlike cone type mills, which disaggregate the operations of hulling and whitening, the steel huller mill incorporates these processes in a single process.

The steel huller includes rotating fluted steel roller, a perforated steel cover located under the roller, a steel housing with inlet and outlet gates, and a resistance steel blade that is adjustable for various clearances.

Paddy enters a feed gate onto a square-threaded screw occupying the initial segment of the fluted steel roller. The screw facilitates entry and axial movement of the grain. Hulling takes place as the grain passes along the rotating fluted roller past the resistance blade. The rapid rotation of the roller combined with the high pressure inside the housing and the grain to grain and grain to hull contact combine to remove the hull and bran sequentially in the same operation. Some ground husks, bran, and brewers rice pass through the screen underneath the fluted roller and milled rice together with the main bulk of ground husks, bran, and brewers rice is discharged into the two-stage rice sifter where the milled rice is separated. At the discharge end of the sifter, a rice exhaustor removes remaining husks and other light materials from the milled rice.

RUBBER ROLL SINGLE PASS RICE MILL

The machine (Fig. C19) is a product of Japanese rice processing technology development and has relatively low capacity but is compact and employs only a one-pass whitening.

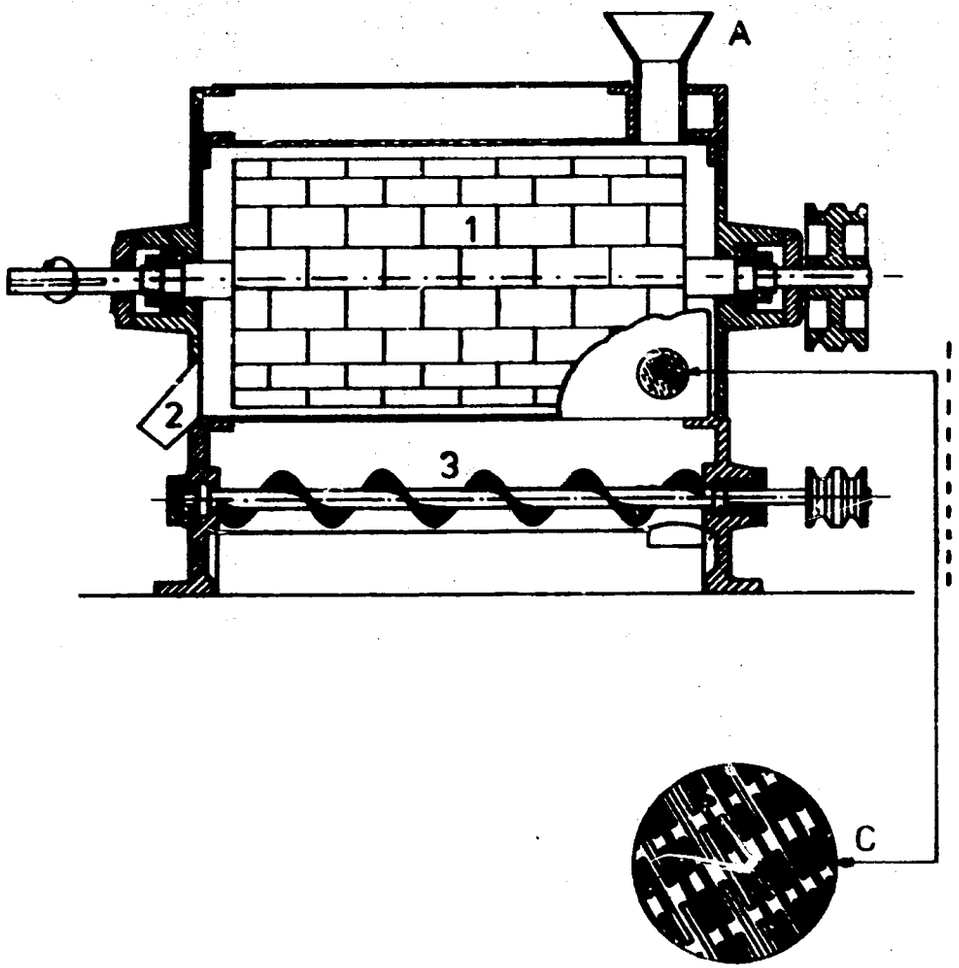

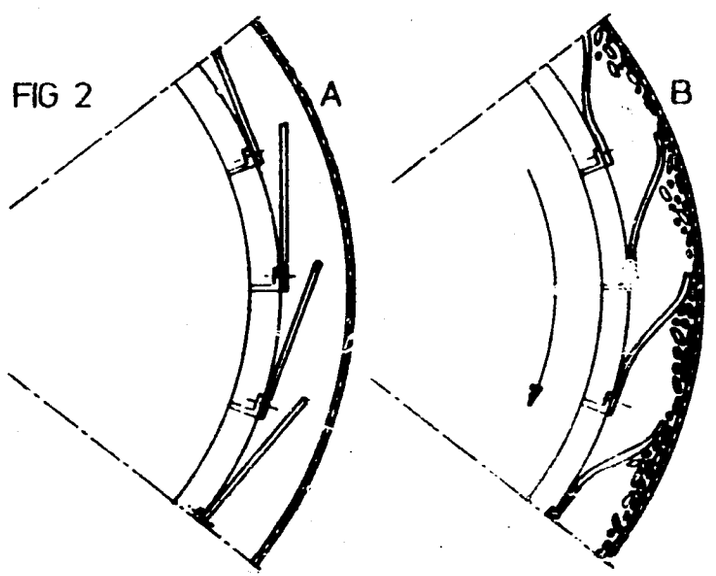

Figure C15. The rice polishing machine.

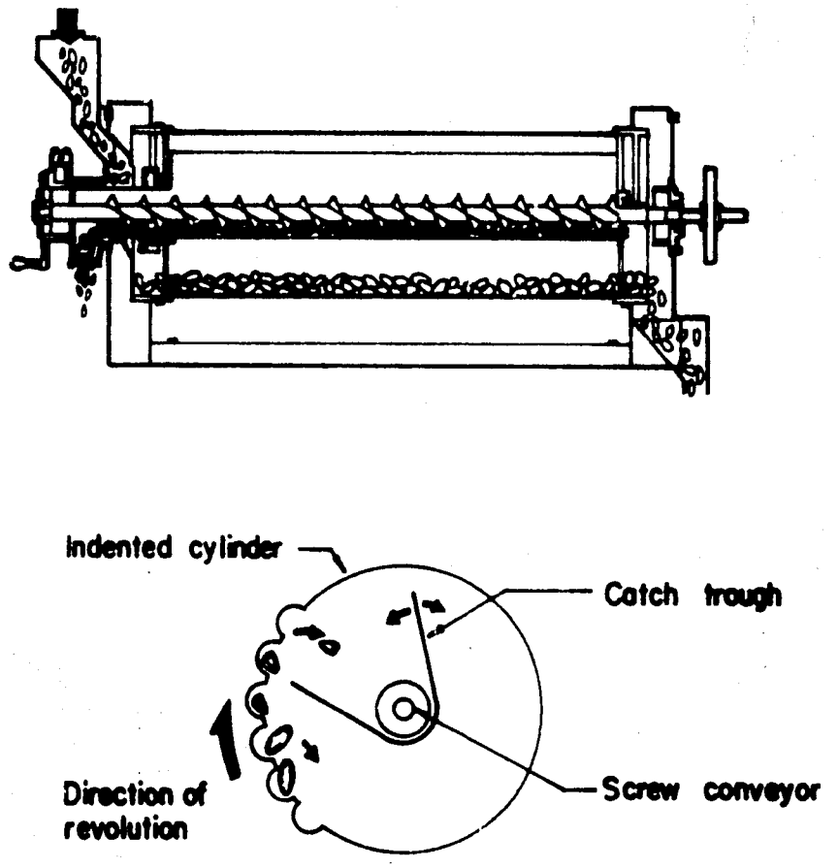

Figure C16. The rice grading machine.

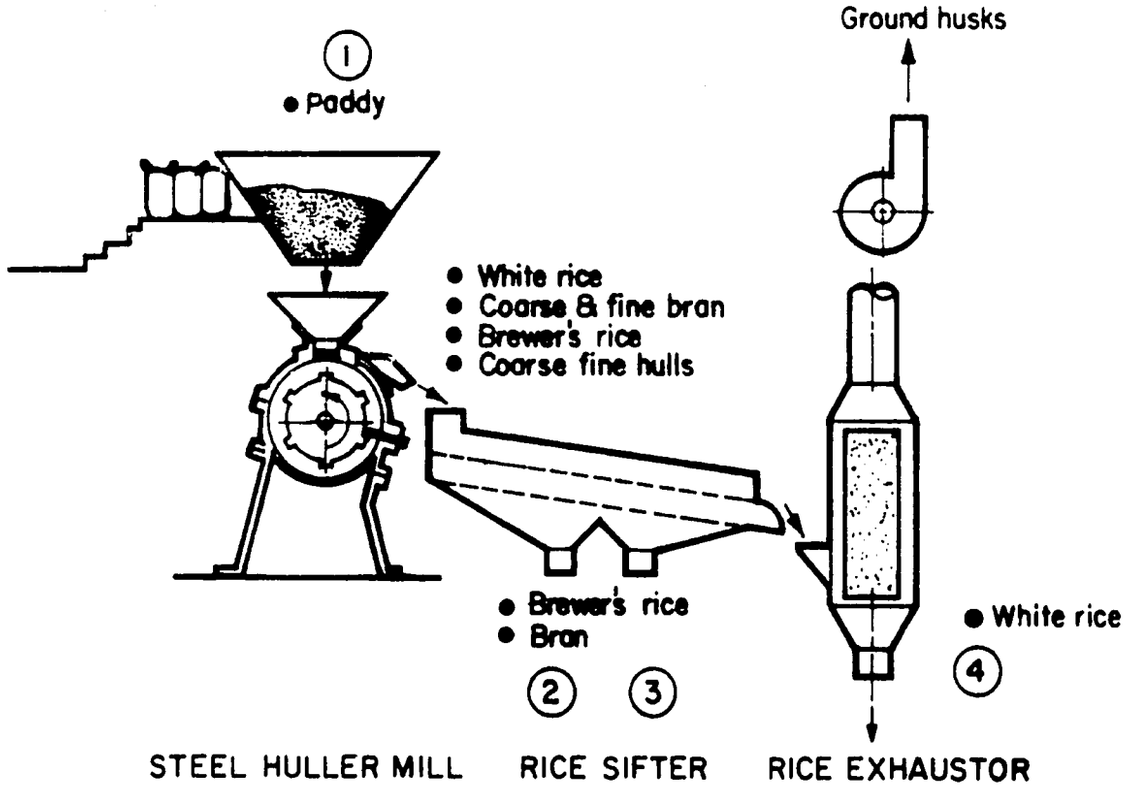

Figure C17. The schematic layout of the engelberg type steel roll single pass rice mill unit.

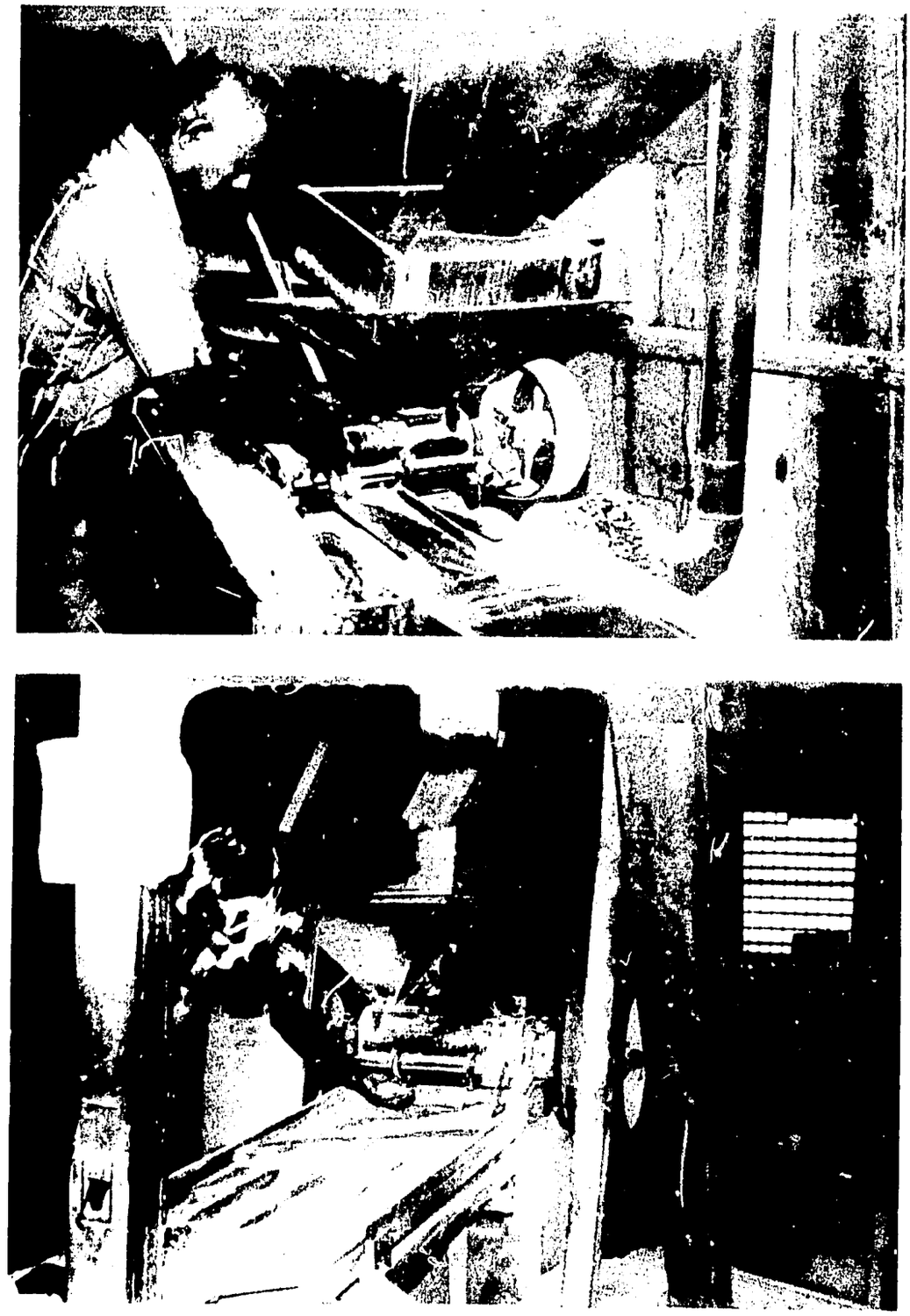

Figure C18. The steel builder mill unit (Kishimoto Engelberg type steel roll single pass rice mill unit.

Paddy passes through a rubber roll huller and husks are separated by a suction blower at the huller outlet. The mixture of paddy and brown rice is pneumatically conveyed to a screen-type paddy separator that produces paddy, a mixture of paddy plus brown rice, and pure brown rice. Paddy is returned to the huller, the mixture is recirculated to the separator, and brown rice is elevated to the whitener.

The whitener is a friction-type unit using a fluted steel roller enclosed in a hexagonal pressure chamber. The chamber has perforations oriented parallel to the axial movement of rice. Unlike the weight loaded gate valve of the whitener described for the rubber roll multipass system, this machine has a rotating control valve at the discharge.

CENTRIFUGAL TYPE RICE MILL

Introduced in the Philippines by Sanriku of Japan (Fig. C20), this rice mill employs a special device for hulling. A rapidly rotating hulling impeller produces a high speed flow of air that creates a vacuum in the center of the impeller chamber. As grain passes through this area, the paddy is impacted against the stationary housing, creating a shearing action between the grain and husk. The difference in the densities of husk and brown rice separates these two portions as they leave the hulling chamber.

The hull is aspirated on the airstream and the brown rice is fed through a one-pass friction-type whitener. The whitener uses a fluted steel roller enclosed in a hexagonal pressure chamber. The chamber consists of a steel screen with slanted perforations shaped hexagonally to effect bran separation. The hollow steel roller allows an air jet to cool the rice and also effect bran separation.

IRRI EXPERIMENTAL SINGLE PASS RICE MILL

The IRRI Agricultural Engineering Department initiated a project to modify the steel huller mill to attempt to quantitatively and qualitatively increase grain recovery (Figs. C21 and C22). An experimental single pass rice mill, the machine has the following features:

1. A continuous single threaded screw at the feeding section of the rotating fluted steel roll.

2. A sectionalized cylinder to separate the processes of feeding and milling and discharge.

3. Provision for an air jet stream passing through the rotating cylinder roll to cool the grain.

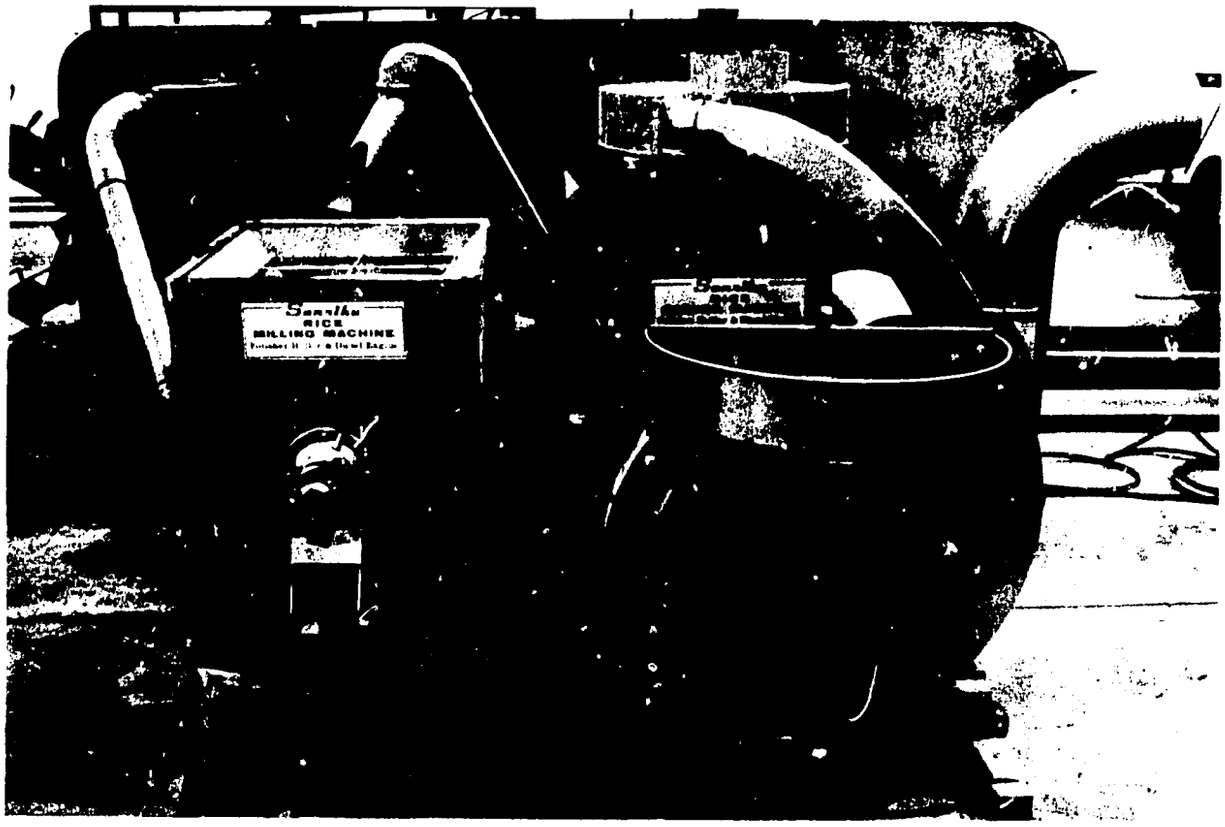

Figure C20. The centrifugal huller rice mill unit or Sanriku village type centrifugal huller/ friction whitener combination mill.

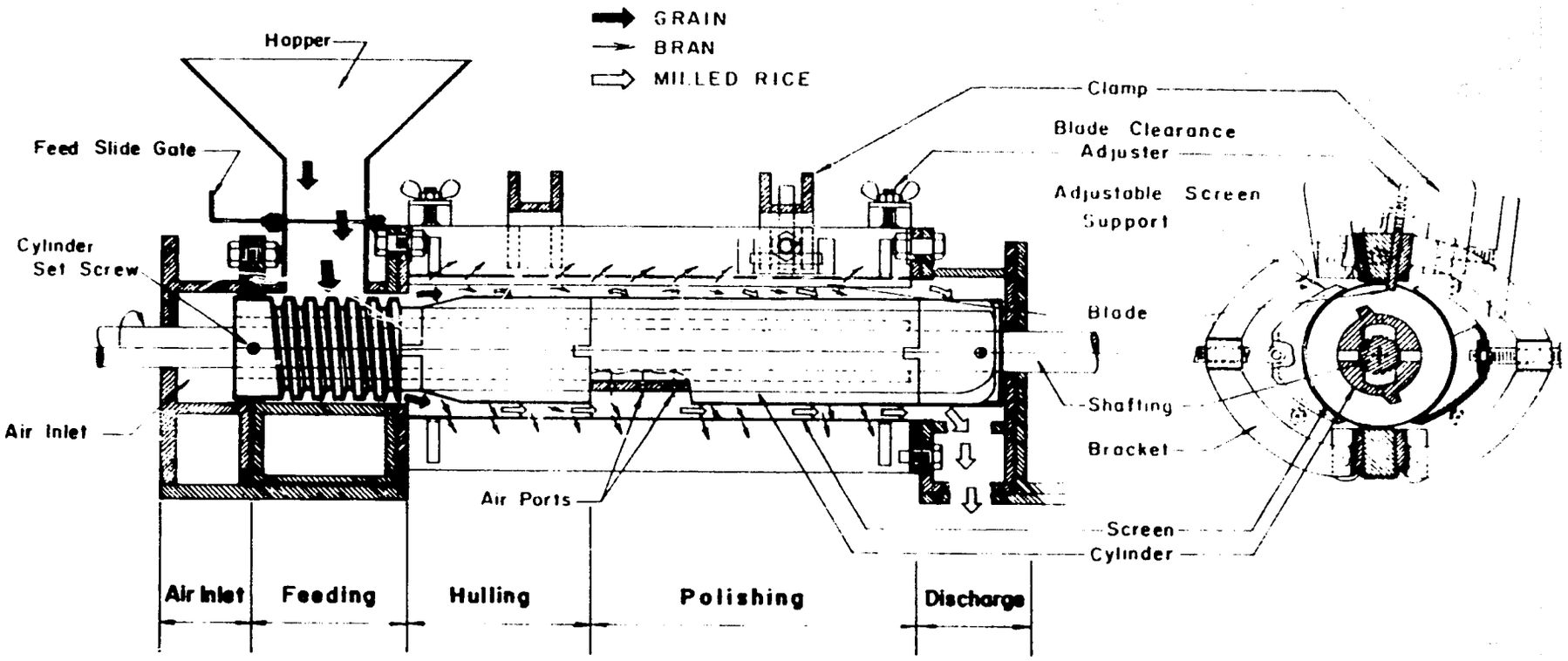

Figure C21. Sectional drawing of the IRRI experimental steel roll single pass rice mill unit.

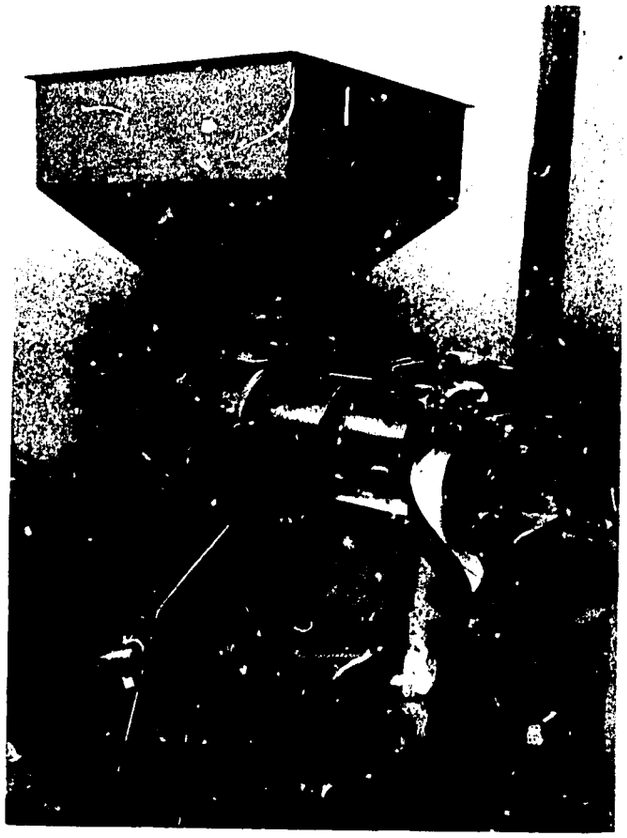

Figure C22. The IRRI experimental single pass rice mill unit or an Engelberg type steel roll rice mill unit.

4. A weight loaded gate to control axial grain movement.

5. Two semicircular screens with adjustable supports to increase bran separation and to permit variations in the clearance with the rotating cylinder roll.

6. An adjustable blade relocated to the top of the machine to make full use of the two semicircular screens in bran separation.

7. A sectionalized rice mill casing for easy assembly and disassembly for inspection, measurement, and repairs.

A rice exhaustor was also present but located at the discharge spout of the mill. Unlike the conventional steel huller mill, the IRRI experimental mill did not have a double-layer rice sifter.

Rice Mill Combinations

RUBBER ROLL-STEEL HULLER MILL

Using a Japanese rubber roll huller in dehusking and a local steel huller mill in whitening, this rice mill has been commercially operating for 6 years (Figs. C23 and C24). Employing an airtrap type husk aspirator following the huller, recycling is achieved to ensure a higher percentage of whole, hulled brown rice. A 6-inch diameter rubber roll is used for husking and a #1 steel huller mill performs the whitening.

Only a small percentage of paddy mixes with the brown rice as it moves into the steel huller mill. The quantity of bran is less but finer and head rice is greater than with the conventional huller. A double layer rice sifter is provided at the discharge of the steel huller to separate bran from milled rice. A rice exhaustor is also situated at the discharge spout of the rice sifter to ensure a cleaner rice product.

STONE DISC-STEEL HULLER MILL

In this system, the stone disc or underrunner disc sheller found on cone type mills was used in conjunction with a steel huller mill (Figs. C25 and C26).

The mill is composed of a paddy sifter, stone disc huller, coarse bran sifter, husk aspirator with blower, a steel huller apparatus, a double layer rice sifter, and a rice exhaustor.

Paddy is precleaned in a sifter and elevated to the huller. The huller discharge moves to a separate sifter to remove small brokens and coarse bran. Hull is removed with an aspirator and the remaining mixture is fed

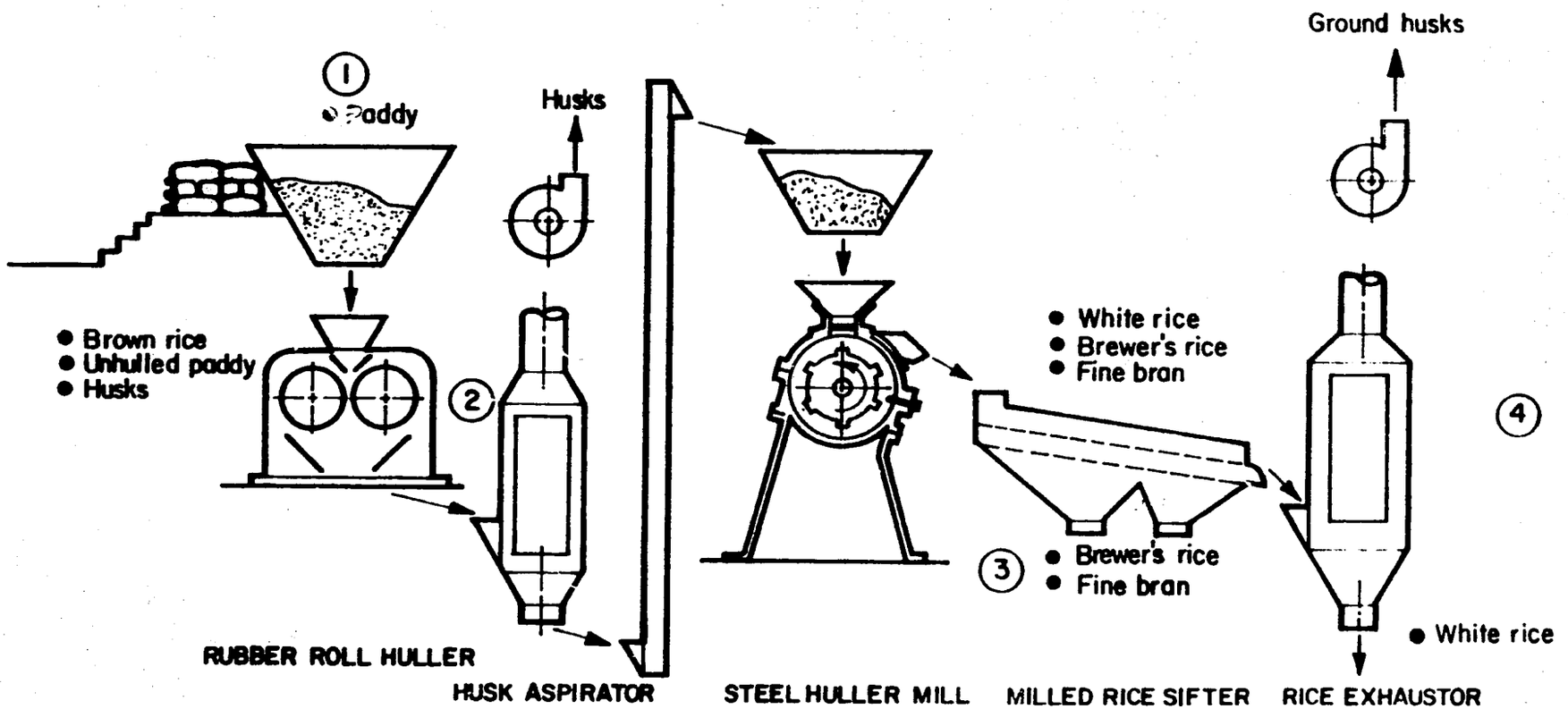

Figure C23. Schematic layout of rubber roll/engelberg type steel roll whitener rice mill combination.

Figure C24. The rubber roll-steel huller combination mill or a rubber roll huller/Engelberg type steel roll whitener rice mill combination.

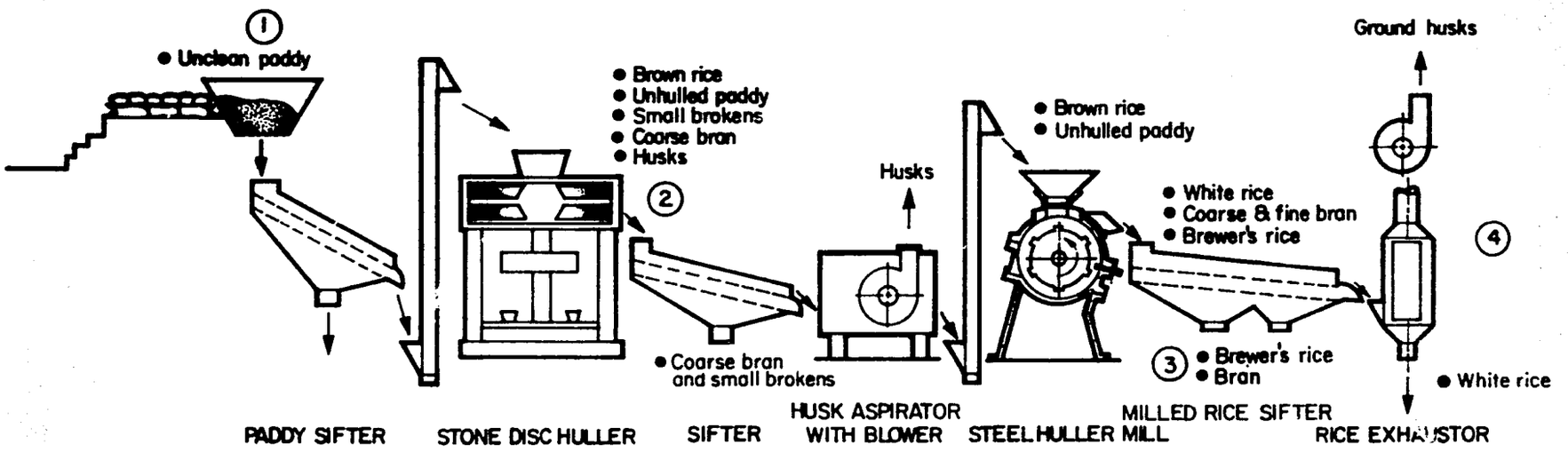

Figure C25. Schematic layout of stone disc huller/Engelberg type steel roll whitener rice mill combination.

into the steel huller mill. The absence of a paddy separator that eliminates recycling means a higher percentage of paddy is found in the whitening compartment of the system.

The milled rice moving from the steel huller is isolated from the bran and brewers rice using an oscillating double layer rice sifter. A rice exhaustor is provided at the discharge end of the sifter to clean the final product further.

MULTIPLE STEEL HULLER MILL

This rice mill (Figs. C27 and C28) is composed of two steel huller units installed in series, an oscillating double layer rice sifter, and a rice exhaustor at the discharge of the rice sifter.

Paddy enters the first mill (size #1), producing a mixture of brown rice, white rice, husks, ground husks, coarse bran, and brewers rice. Some fine materials pass through the internal screen in the huller while the main products are discharged into the second mill (size #7).

Final hulling and whitening takes place in the second steel huller mill. The products move to an oscillating double layer rice sifter where separation of milled rice and by-products take place. A rice exhaustor cleans the milled rice before bagging.

LABORATORY ANALYSIS

Samples gathered during the technical assessment project were analyzed in the laboratory to examine qualitative and quantitative effects.

LABORATORY PROCEDURES: PADDY MILLING POTENTIAL (See Fig. C29).

A 500-g paddy sample is necessary. Using round sieves (Fig. C30), separate large-heavy, small-heavy, and large-light impurities. After sieving, place paddy into an aspirator (Bates) (Fig. C31) to remove small-light unfilled grains and other light materials not removed during sieving. Collect all impurities and weigh. Determine weed and other crop seed weights by using the smallest size sieves. From the clean paddy, measure the moisture content with a moisture meter (Fig.C32). Randomly select 100 mature grains and dehull by hand. Place under a magnifying glass equipped with light and (Fig. C33) count the cracked kernels. Also randomly pick 1000 grains and weigh.

Segregate and hull a 200-g clean paddy sample in a laboratory testing husker (Fig. C34). Repeat the hulling procedure two to three times until there is complete hulling. If unhulled paddy remains, handpick and weigh. As additional information, obtain the weight of 1000 grains of brown rice.

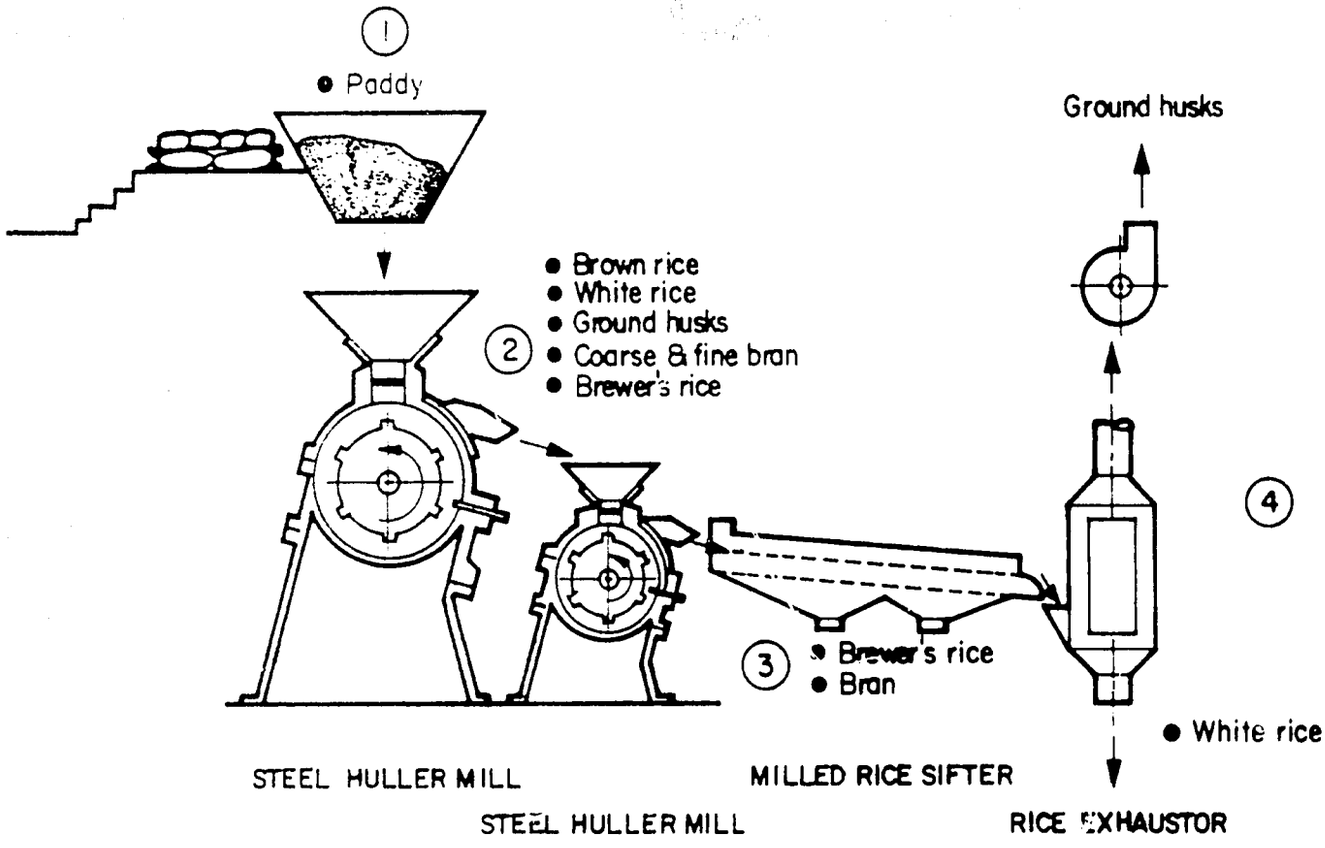

Figure C27. Schematic layout of an engelberg type steel roll rice mill combination.

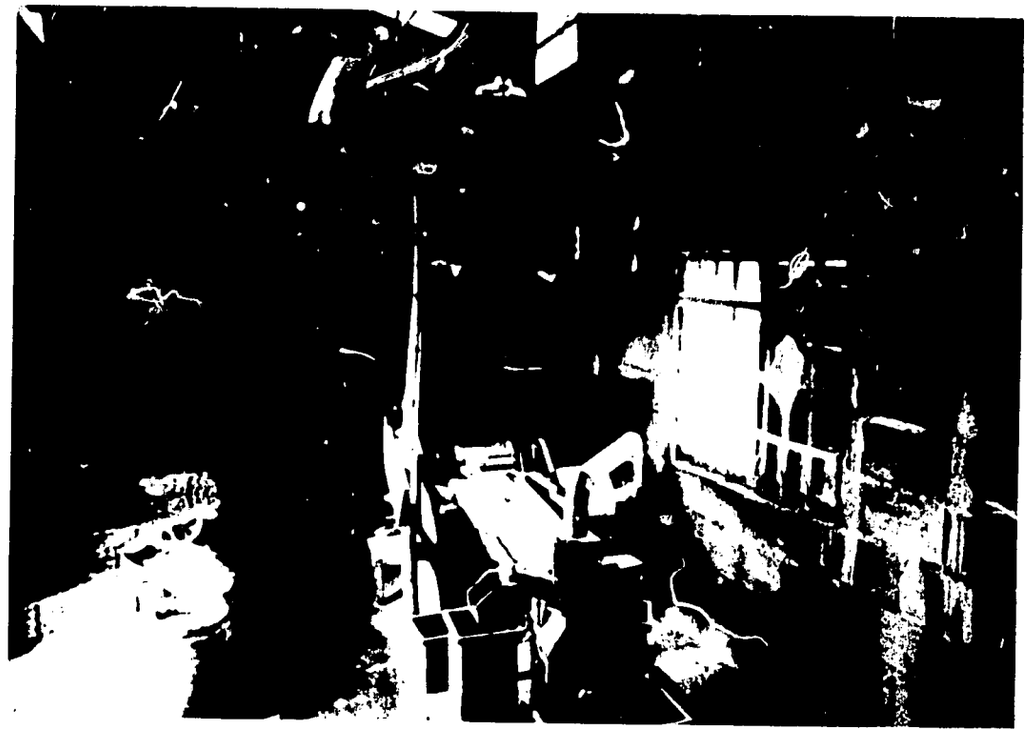

Figure C28. The multiple steel huller rice mill unit or an Engelberg type steel roll rice mill combination.

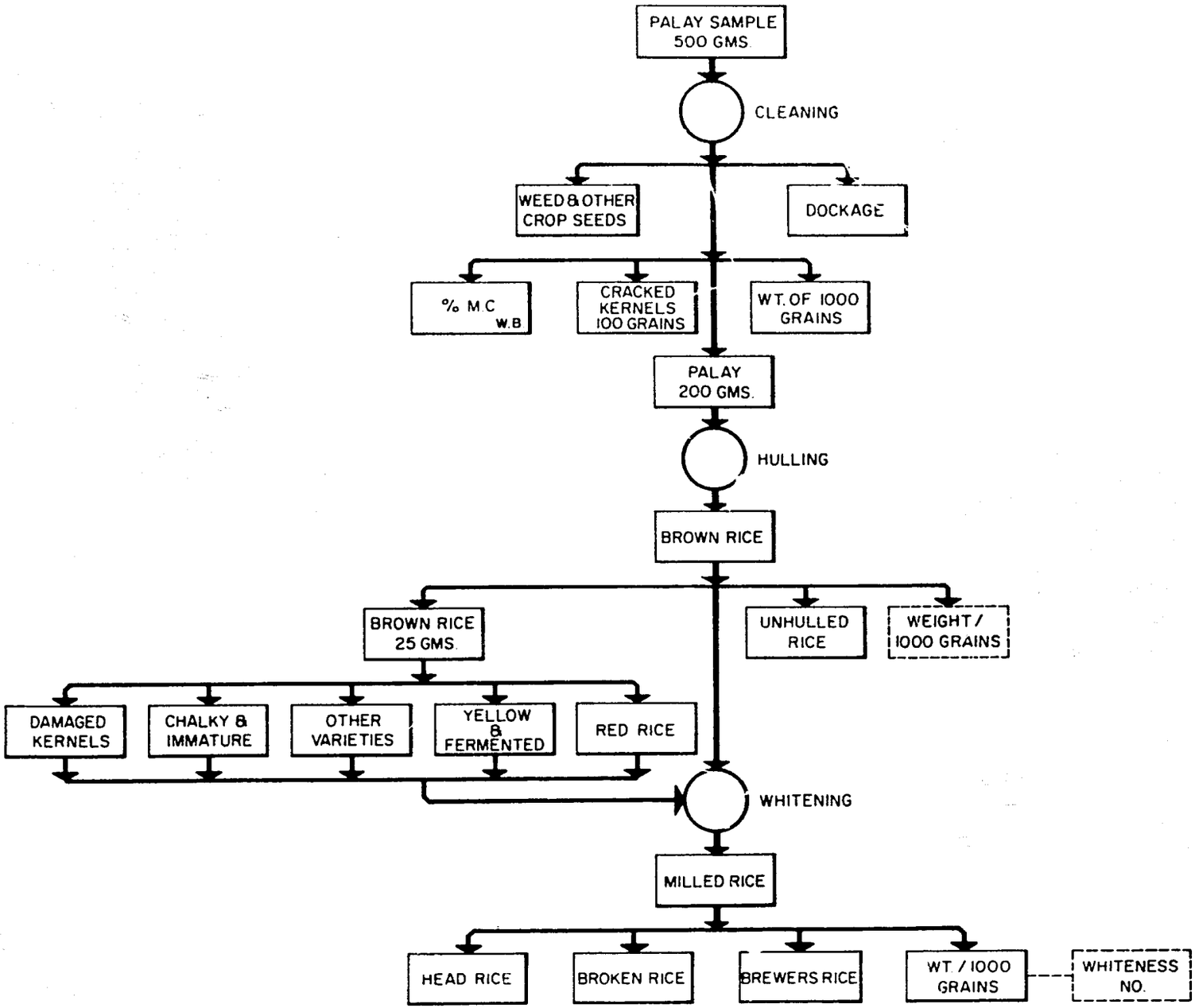

Figure C29. Rough rice analysis by weight (milling potential).

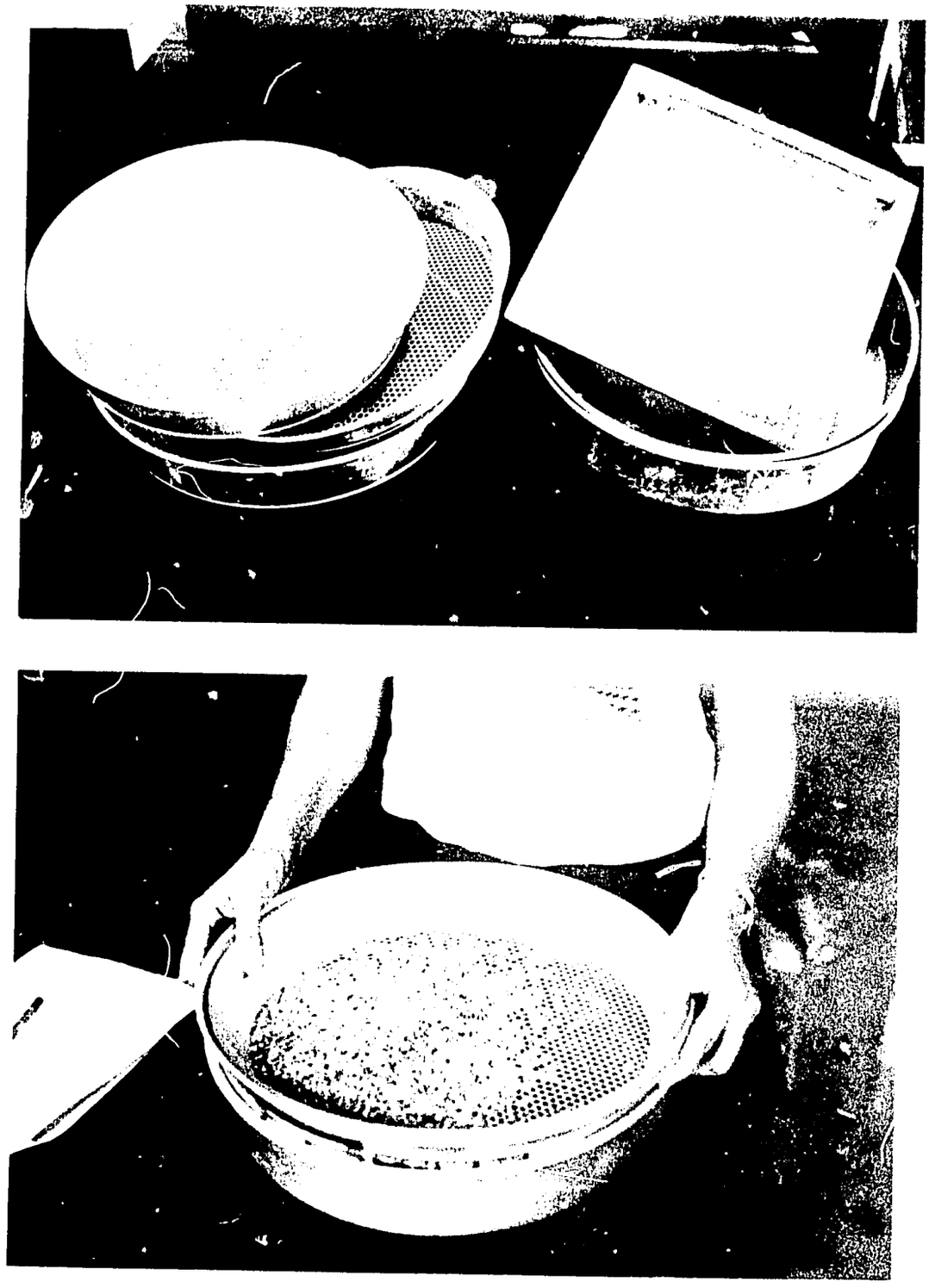

Fig. C30. Sieves with round perforations.

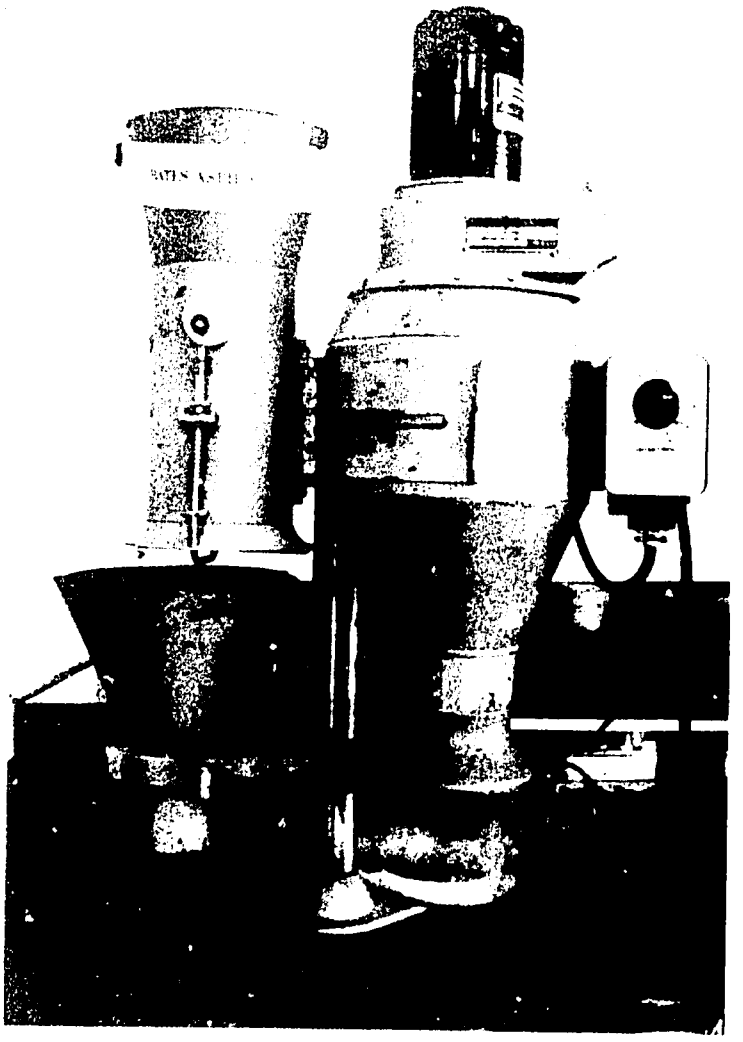

Fig. C1. The laboratory aspirator.

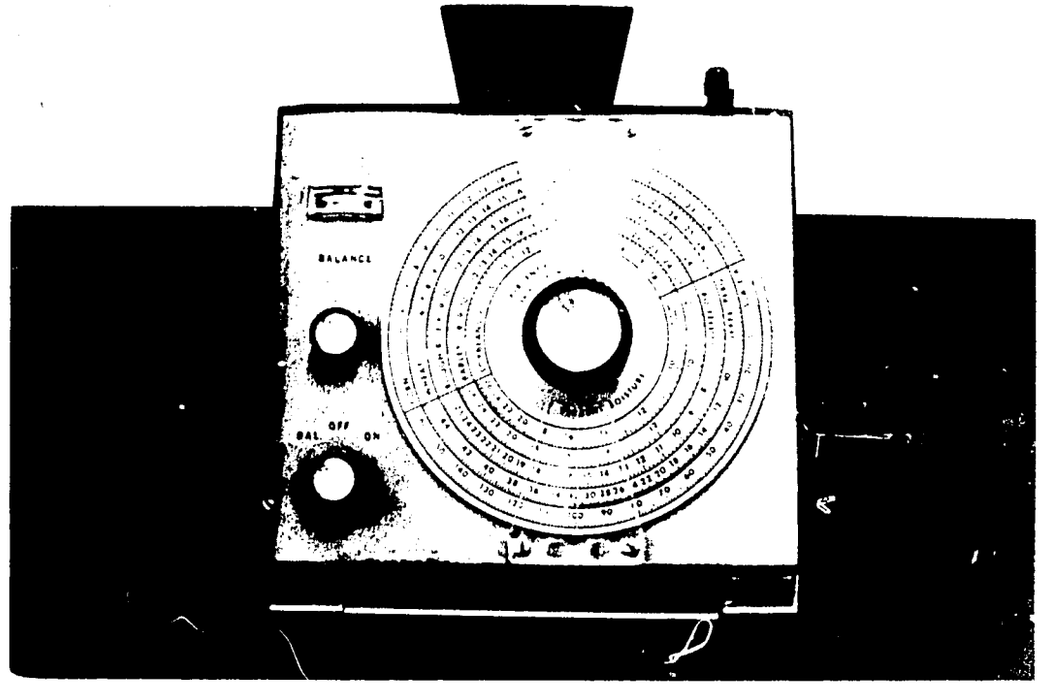

Fig. C32. The moisture meter.

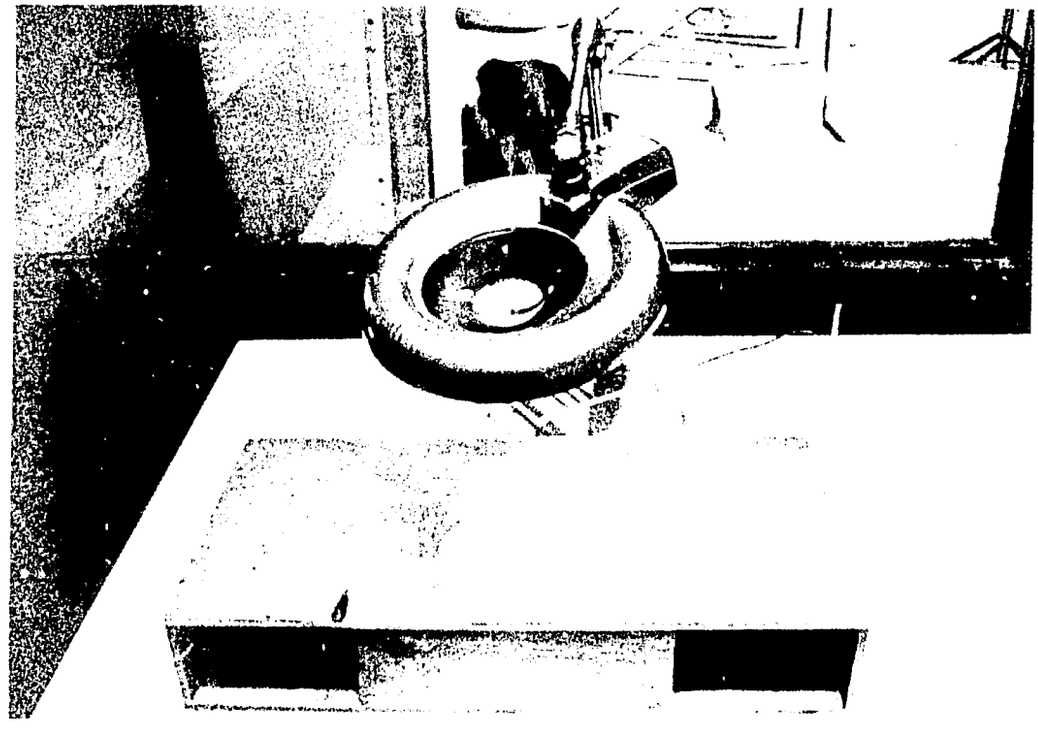

Fig. C32. The manufacture glass with light.

Figure C34. The laboratory testing husker.

Obtain 25-g of brown rice from the main sample and determine the number of chalky and immature kernels, damaged kernels, yellow and fermented kernels, red rice, and other varieties. After this procedure, return the 25-g to the main sample for whitening.

Place the brown rice in an automatic testing mill (Fig. C35) and set the automatic timer to the prescribed exposure time. Start and wait until the motor stops. Collect the milled rice and weigh. Select 100-g of milled rice and, with the aid of a manually operated indented tray rice grader (Fig. C36), separate the head rice, broken rice, and brewers rice. Enter all data in the laboratory analysis form.

By using the measured weights and the formula listed below, the milling potential of paddy can be ascertained.

$$\% \text{ Dockage} = \frac{\text{wt. of impurities}}{\text{wt. of sample}^{a/}} \times 100$$

$$\% \text{ Weed and Crop Seeds} = \frac{\text{wt. of weeds and crop seeds}}{\text{wt. of sample}} \times 100$$

$$\% \text{ Other varieties} = \frac{\text{wt. of other varieties}}{\text{wt. of sample used}^{b/}} \times 100$$

$$\% \text{ Chalky and immature} = \frac{\text{wt. of chalky and immature kernels}}{\text{wt. of sample used}} \times 100$$

$$\% \text{ Damaged kernel} = \frac{\text{wt. of damaged kernels}}{\text{wt. of sample used}} \times 100$$

$$\% \text{ Yellow and fermented} = \frac{\text{wt. of yellow and fermented kernels}}{\text{wt. of sample used}} \times 100$$

---

a/ weight of sample = 500 g

b/ weight of sample = 25 g

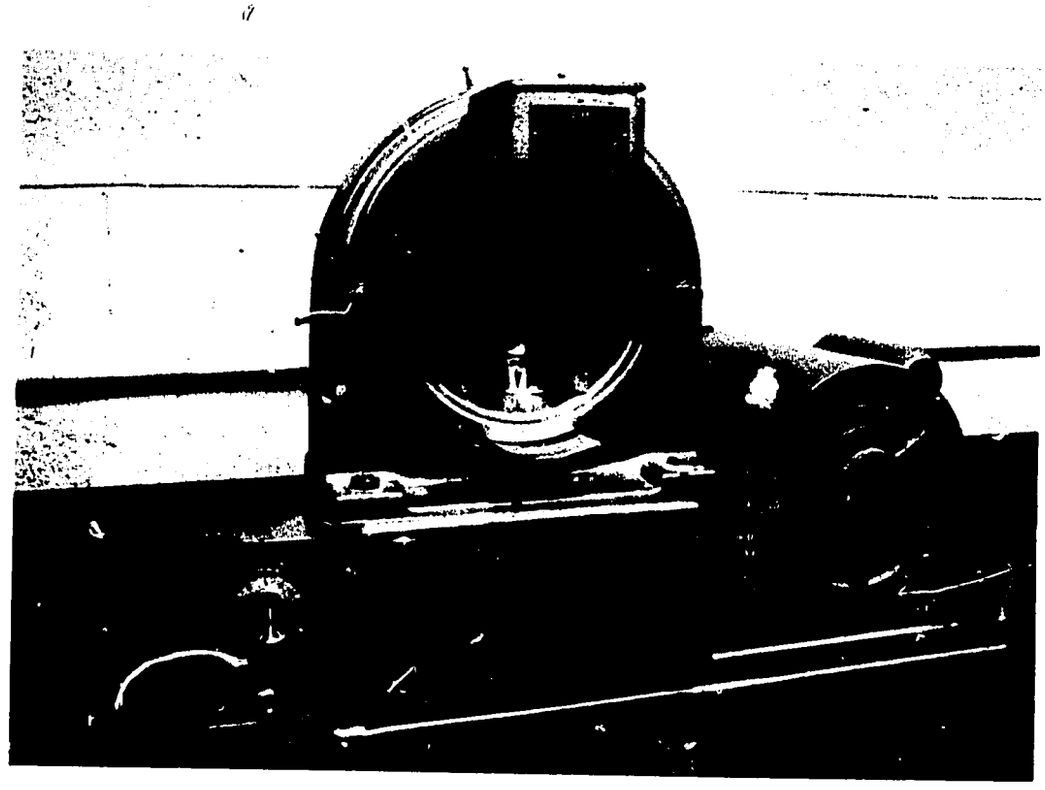

Fig. C35. The automatic laboratory whitening machine.

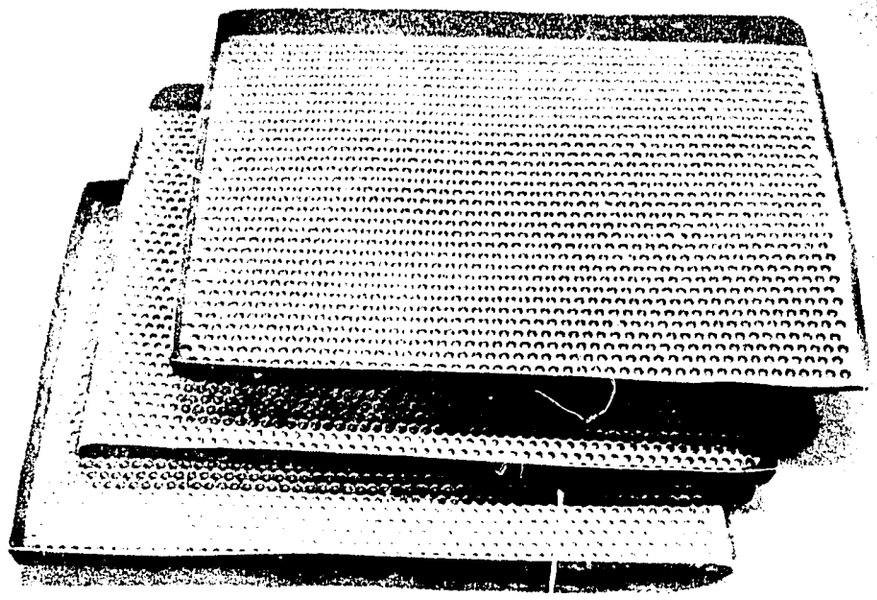

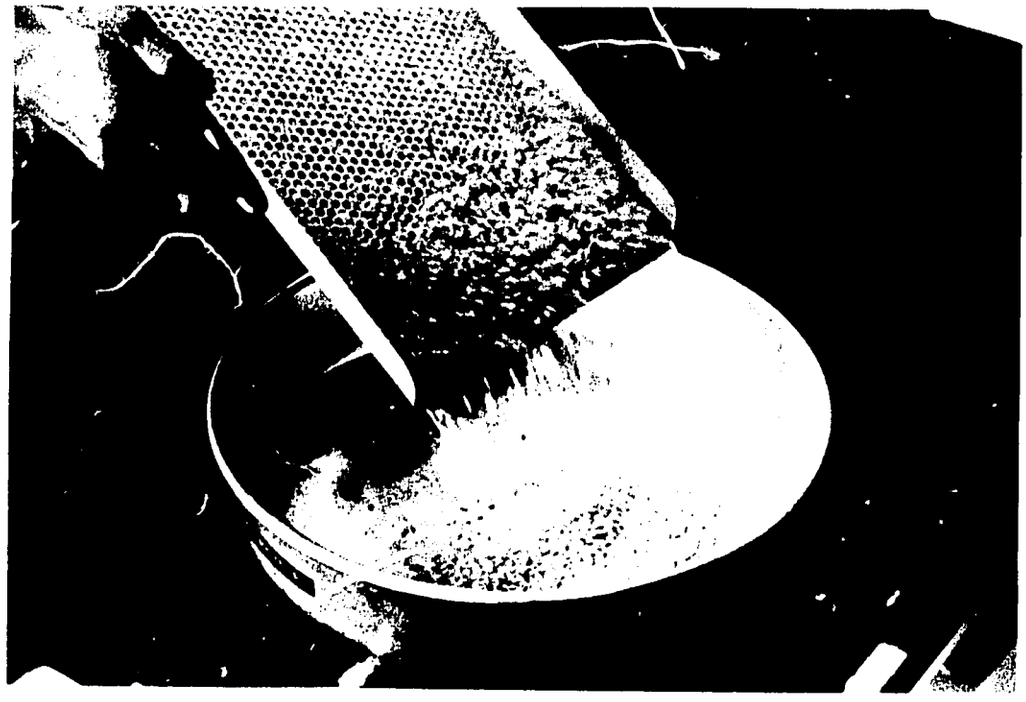

Fig. C36. The laboratory indented tray rice grader.

$$\% \text{ Red rice} = \frac{\text{wt. of red rice}}{\text{wt. of sample used}} \times 100$$

$$\% \text{ Milling Recovery} = \frac{\text{wt. of milled rice}}{\text{wt. of paddy sample} - \text{wt. of unhulled paddy used in hulling}} \times 100$$

$$\% \text{ Head Rice} = \frac{\text{wt. of whole milled rice}}{\text{wt. of milled rice sample used } a/} \times 100$$

$$\% \text{ Broken Rice} = \frac{\text{wt. of broken milled rice}}{\text{wt. of milled rice sample used}} \times 100$$

$$\% \text{ Brewers rice} = \frac{\text{wt. of brewers rice}}{\text{wt. of milled rice sample used}} \times 100$$

Laboratory Procedures: For brown rice and milled rice obtained from commercial mill (See Figs. C37 and C38.)

To gauge the performance of a huller, the coefficient of hulling and wholeness must be determined. The coefficient of hulling is defined as the ratio of the weight of brown rice to the weight of the mixture of brown rice and unhulled paddy. It measures the quantitative efficiency of the huller in separating the husk from the unhusked rice.

A qualitative measure, the coefficient of wholeness, is expressed as the ratio of whole brown rice to the mixture of whole and broken brown rice. Hulling efficiency can be obtained by multiplying the coefficient of hulling and wholeness.

---

a/ weight of milled rice sample used = 100 g.

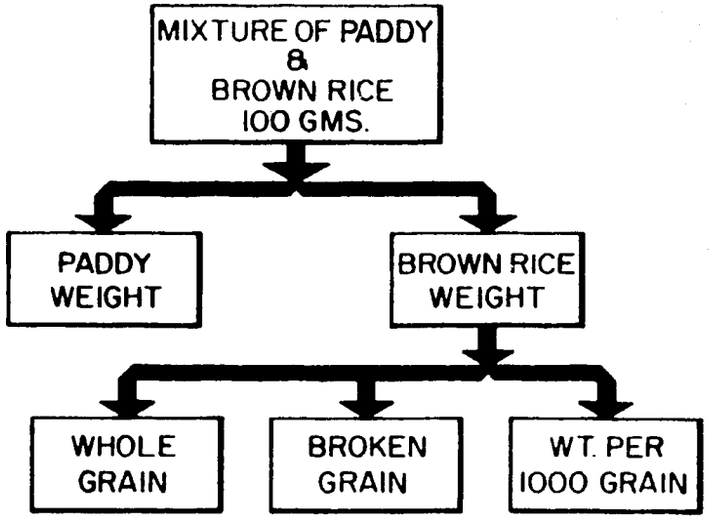

Figure C37. Brown rice (from commercial mill) analysis.

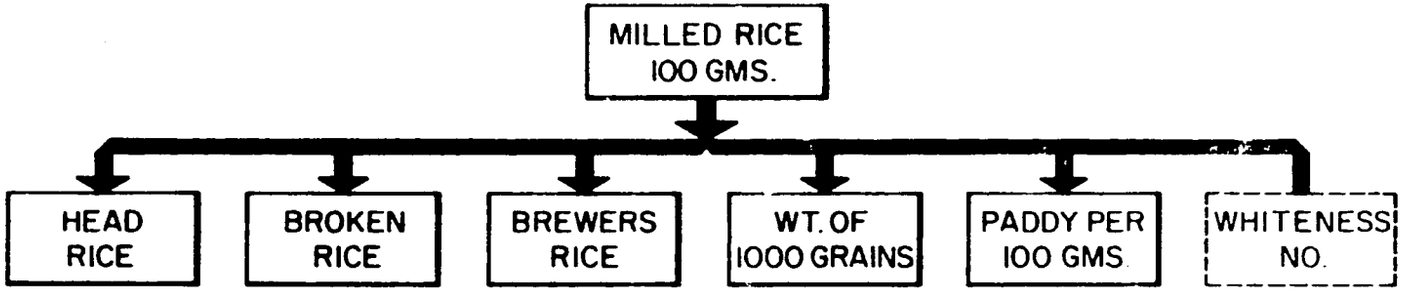

Figure C38. Milled rice (from commercial mill) analysis.

$$\text{Coefficient of hulling} = \frac{\text{wt. of brown rice}}{\text{wt. of sample (mixture of paddy and brown rice)}}$$

$$\text{Coefficient of wholeness} = \frac{\text{wt. of whole brown rice}}{\text{wt. of sample (mixture of whole and broken brown rice)}}$$

$$\text{Hulling efficiency} = \text{Coefficient of wholeness} \times \text{coefficient of hulling} \times 100$$

In the laboratory, weigh 100-g of sample, a mixture of unhulled paddy and brown rice. Separate unhulled paddy from brown rice and weigh each part. From the brown rice obtained separate the broken and whole grains and weigh.

Milled rice samples obtained from commercial mills were analyzed in the laboratory to assess qualitatively milling system effects on grain. Weigh 100-g of milled rice sample and separate broken grains from whole grains by using the indented tray rice grader. Weigh each part and record. The formula in the paddy milling potential analysis can be used to determine each value.