PN-AAG-079

AGENCY FOR INTERNATIONAL DEVELOPMENT
WASHINGTON, D. C. 20523
BIBLIOGRAPHIC INPUT SHEET

FOR AID USE ONLY
Batch 94

1. SUBJECT CLASSIFICATION
A. PRIMARY: Science and technology — TC00-0000-0000
B. SECONDARY: Applications

2. TITLE AND SUBTITLE
Granular urea; advantages and processes

3. AUTHOR(S)
Waggoner, D.R.

4. DOCUMENT DATE: 1975
5. NUMBER OF PAGES: 16p.
6. ARC NUMBER: ARC

7. REFERENCE ORGANIZATION NAME AND ADDRESS
IFDC

8. SUPPLEMENTARY NOTES (Sponsoring Organization, Publishers, Availability)
(In IFDC--T-1)

9. ABSTRACT

10. CONTROL NUMBER
PN-AAG-079

11. PRICE OF DOCUMENT

12. DESCRIPTORS
Fertilizers
Granular materials
Nitrogenous fertilizers
Urea

13. PROJECT NUMBER
931005400

14. CONTRACT NUMBER
AID-ta-G-1218 GTS

15. TYPE OF DOCUMENT

AID 890-1 (4-74)

TABLE OF CONTENTS

	Page No.
TABLE OF CONTENTS	i
LIST OF TABLES	ii
LIST OF FIGURES	ii
INTRODUCTION AND SUMMARY	1
GRANULATION PROCESSES	2
TVA Pan Granulation	3
Norsk Hydro Pan Granulation	4
C & I Girdler Spherodizer Granulation	4
Fisons Granular Urea Process	4
Conversion from Prilling to Granulation	6
SOLIDS RECOVERY	7
Wet Scrubbing	7
Dry Collection	8
COMPARATIVE COST OF GRANULATION AND PRILLING	8
UREA SUPER GRANULES	9
REFERENCES	10

TABLES

1 Typical operating data—urea pan granulation 5

2 Typical operating data—urea Spherodizer granulation 5

3 Summary of investment, production cost and in-plant price for pan-granulated and prilled urea 8

FIGURES

1 Consumption of selected materials in the United States for direct application 1

2 Sketch of pan operation 2

3 Pan granulation process for granular urea (with wet scrubbing) 3

4 Ammonium nitrate or urea pan granulation (process arrangement in a new plant) 6

5 C & I Girdler urea Spherodizer process 7

6 Pan granulation process for granular urea (with filter bag house) 9

INTRODUCTION

Interest is growing rapidly in the United States in producing urea in granular form rather than the conventional prilled product for a number of reasons. This growth in interest has paralleled the growth in use of urea as a fertilizer material. As shown in figure 1, use of urea for direct application has increased by a factor of 2.5 during the last decade (1).

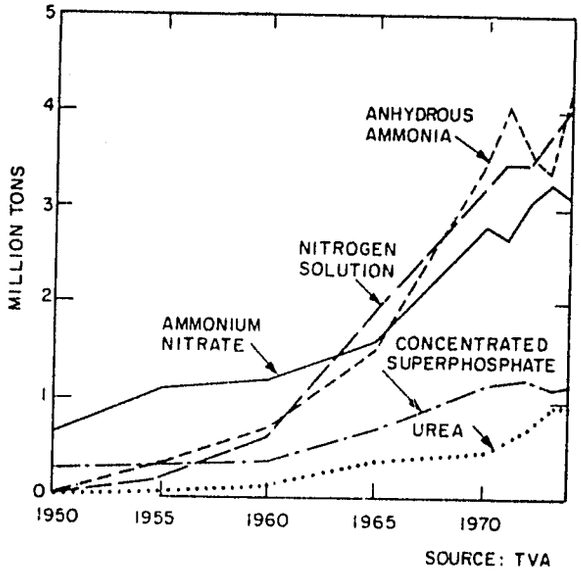

FIGURE I
CONSUMPTION OF SELECTED MATERIALS IN THE UNITED STATES FOR DIRECT APPLICATION

The preference for urea in developing countries is particularly strong. Based on announced plans for new facilities, by 1980, 85% of the nitrogen fertilizer capacity in Asia will be in the form of urea[1]. Although the superior physical properties of granular urea have been recognized for several years, they were not strongly considered since most U.S. manufacturers and farmers were using ammonium nitrate as a source of solid nitrogen. During the same period of time that use of urea was expanding, stringent pollution regulations were enacted which required better methods to minimize dust evolution during urea production. Granular urea processes are more adaptable for efficient dust removal than prilling processes.

One important characteristic of granular urea processes is the wide range of particle sizes that can be produced. This is important in the United States as much nitrogen is marketed in the form of bulk blends which involves physically mixing two or more materials for a given ratio or grade of product. In order to produce a homogeneous product, the particle sizes of the raw materials must be closely matched; otherwise, physical segregation will occur. Air prilled urea is too small compared with other granular materials, such as diammonium phosphate (DAP) and potassium chloride, whereas granular urea can be size-matched with these materials. Also, granular urea is about 2 to 2.5 times harder than prilled urea which improves its bulk handling-storage characteristics. Results from TVA studies (2) comparing crushing strength and abrasion resistance of two types of granular urea and prilled urea are summarized below:

Type Urea	Crushing Strength lbs.	Increase in (1) minus (-) 16-mesh
Prilled Urea	2.2 to 2.6	19.7%
Granular Urea, spray drum	4.5 to 7.2	0.2%
Granular Urea, TVA pan	3.1 to 5.6	1.7%

The resistance to abrasion is determined by measuring the increase in minus (-) 16-mesh material after rolling for five minutes with steel balls.

Larger size, higher crushing strength, and increased abrasion resistance make granular urea particularly well suited for use as a substrate in coating processes such as sulfur-coated urea. Sulfur coating is a process whereby urea particles are encapsulated with sulfur for controlled

[1]Reference TVA Y-95.

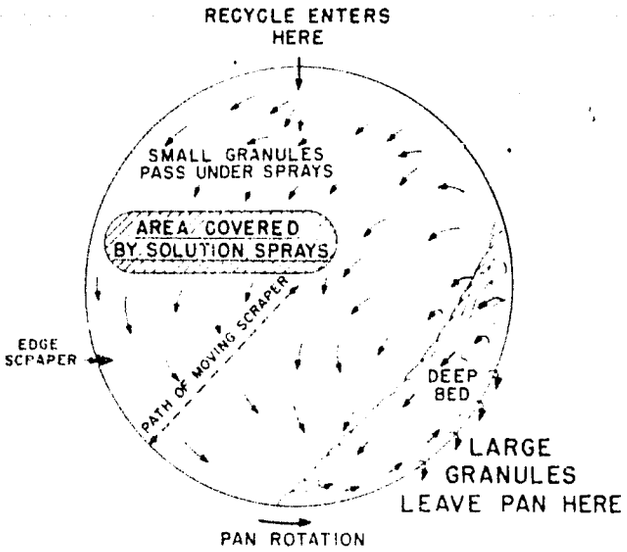

FIGURE 2
SKETCH OF PAN OPERATION

release of the nitrogen. In any coating process, the least surface area is desirable to minimize the quantity of coating required to achieve a desired release rate. The particles should also be smooth, round, and hard.

Large granules (about 4 to 6 mm) are preferred for forest fertilization by aerial application. This size is produced commercially by at least one company.

Work is under way at the International Fertilizer Development Center (IFDC) and in cooperation with a number of key research institutions in Asia to obtain agronomic data for rice production using super granules of urea (weight per particle of 2, 4, or 6 grams). This work is only in the preliminary stage but should it prove agronomically effective, granulation is one way to approach production of these large particles.

Control of particulate emissions from prill plants is very difficult because: (1) relatively large quantities of air are used; (2) aerosols are formed which require high energy scrubbing for removal; and (3) the dust-laden air discharges 100 to 150 feet (30.5 to 45.8 meters) above ground level. The principal advantages when employing granulation are:

1. Cooling air is used more efficiently; thus less air is used and the equipment is smaller.
2. Only small amounts of air are in contact with the melt thus minimizing formation of aerosols.
3. The duct work is greatly simplified since the equipment is at ground level.

In summary, the advantages of granular over prilled urea are:

1. Flexibility to produce closely sized granules in size ranges needed for: (a) bulk blending; (b) sulfur coating; and for controlled release of N (c) larger granules for deep placement in rice paddy or for aerial application for forest fertilization.
2. The granules are stronger both in crushing strength and resistance to abrasion.
3. Control of atmospheric poilution is easier.

Because of these advantages, the position of the IFDC is that future facilities built in developing areas should incorporate granular urea.

Granulation Processes

This paper discusses the latest technology for granular urea production and gives some economics of urea prilling versus granulation (pan).

Granulation of urea is a process whereby granulation is accomplished by spraying highly concentrated solution (99%+) onto a rolling bed of solid particles. As the particles roll they are coated with molten urea and build up to product size by an "onion skinning" effect (3, 4, 5). It is a special way of finishing urea and is now the trend for future production in the United States.

Prilling is considered an economical process for producing high-nitrogen materials such as urea or ammonium nitrate. It has at least two major disadvantages, i.e., the product is inherently of small particle size and atmospheric emissions (dust) from prill towers are difficult to collect and recover. As stated previously, control of emissions from a granulation process is relatively easy and a wider range of particle sizes can be produced. Larger particles than ordinary air-prilled urea are of benefit if the urea is to be used for bulk blending or coating to produce a controlled-release nitrogen product. Further, the granular urea is harder and less fragile in bulk handling shipping operations.

Biuret content of urea, whether air prilled or granular, is generally dependent on the solution and melt preparation systems. Biuret formation during granulation is considered to be negligible (3, 4). However, there is some increase in biuret as a result of recycling of scrubber liquor from a wet scrubbing system to the urea solution evaporation step. This increase in biuret should have no significant effect on the agronomic performance of granular urea for most industrial use and food crops. Also, granulation processes do not lend themselves well to production of very small particles equivalent to microprills.

There are three processes which have produced granular urea in commercial sized units. They are: (1) TVA pan granulator, (2) Norsk Hydro pan granulator; and (3) C & I Girdler Spherodizer. A brief description of each of these three processes will be given later. The solution and melt preparation steps will not be discussed since any conventional process can be used.

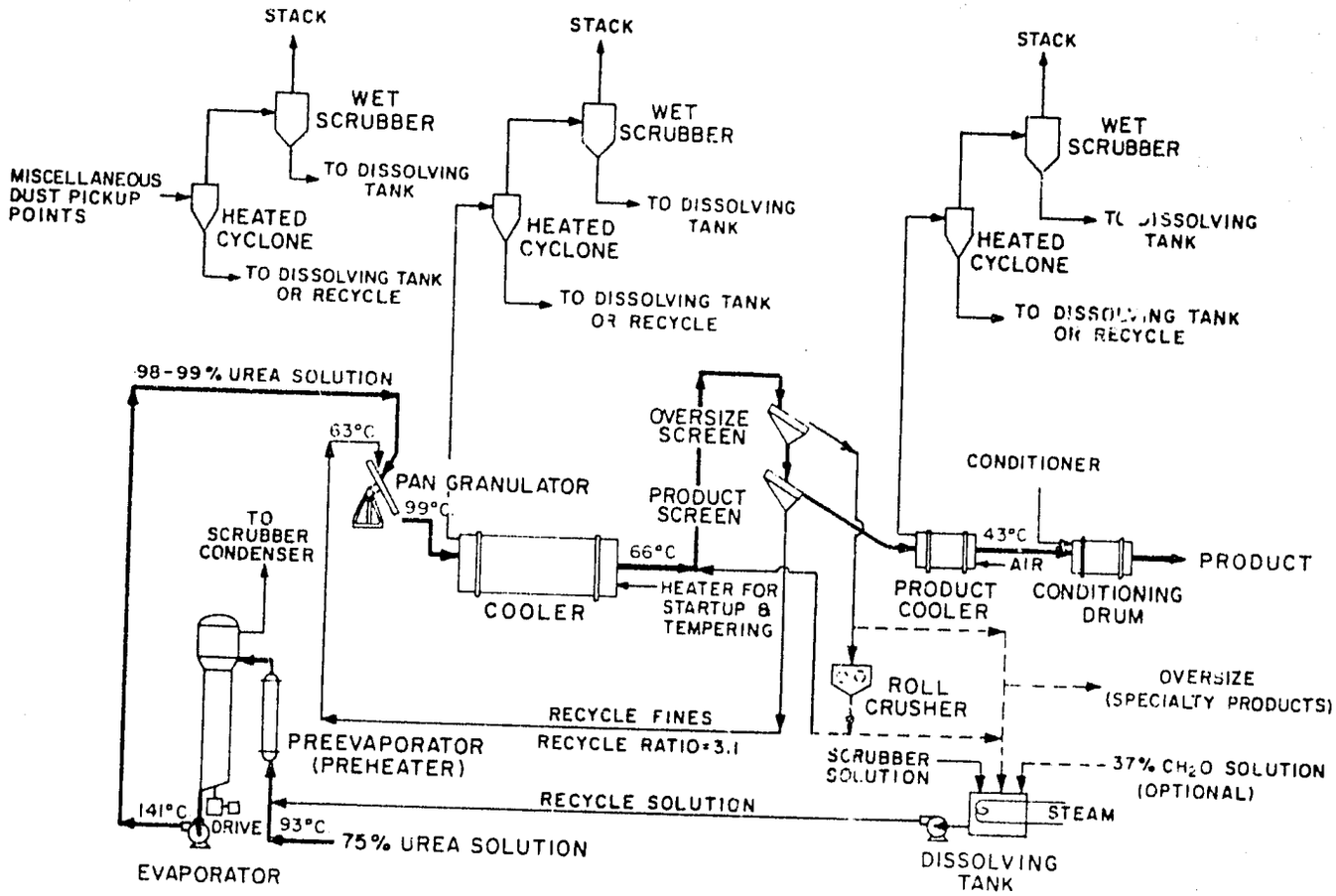

FIGURE 3
PAN GRANULATION PROCESS FOR GRANULAR UREA
(WITH WET SCRUBBING)

Also, the solids recovery system can be either wet or dry, and the same type system used with either of these three processes. For this reason, discussion of solids recovery is given separately rather than being repeated for each process.

TVA Pan Granulation (3, 5, 6)

Two basic schemes are being used for urea granulation, pan granulation and drum granulation. The inclined pan granulator has been adopted at TVA based on pilot-plant experience which is now being demonstrated at 8.5 nominal short tons per hour (7.7 metric tons per hour), which is the capacity of the TVA urea solution unit. The granulation process and the internal recycle or classifying action in the pan has been described by Young and McCamy (6) and Waggoner, *et al.* (3). Figure 2 is a sketch of the pan operation. The feed to the process consists of urea melt from an air-swept, rotary-disc, falling-film evaporator. The melt at 99 percent-plus concentration and 285°F (141°C) is pumped from the bottom of the evaporator to multiple sprays over the bed of moving solids in the pan granulator. With proper positioning of the hollow cone spray nozzles which feed the melt, and with proper distribution of the recycled undersize on the pan, the melt solidifies in even layers on the undersize in the upper area of the pan. When the particles reach the proper size by this layering or "onion-skinning" process, they are discharged by the natural classifying action of the pan before any appreciable amount of oversize is formed. The pan may be rotated in either a clockwise or counterclockwise direction. The particle size and shape are influenced by the rotational speed and slope of the pan. Critical features for best operation of the pan granulator include slope, rotational speed, location of sprays, and the amount, particle size, and temperature of the recycled material.

TVA has made pilot-plant studies of both "high temperature" and "low-temperature" methods for granulation of urea in the pan granulator. In high-temperature granulation, the bed temperature was kept at only a few degrees below the crystallization temperature of the feed melt (270°F = 132°C). This was accomplished by regulating the temperature and quantity of recycle. When the recycle temperature was 120 to 135°F (49 to

57°C), a recycle to feed ratio of 1.0 to 1.5 was required. Best granulation was obtained when the bed temperature was maintained at 225 to 250°F (107 to 121°C). In this type operation the granules are soft and attain a spherical shape by rolling in the pan. A disadvantage of high-temperature granulation is that an upset in the recycle system can cause the bed in the granulator to melt and interrupt the operation.

Low temperature granulation is used by TVA in the demonstration-scale unit. Figure 3 is a basic flowsheet for this process. The bed temperature is maintained at 200 to 215°F (93 to 102°C), which is substantially lower than the melting temperature of 270°F (132°C). Material from the granulator flows to a rotary cooler where the temperature is reduced to approximately 150°F (66°C) prior to screening. The cooler discharge is screened to separate oversize, on-size and undersize. The oversize is crushed and returned to the system recycle system or dissolved and returned via the scrubber solution system. Undersize is returned to the granulator as recycle. Product from the screens goes to a cooler where the temperature is lowered to 110°F (43°C). A drum is provided for a solid conditioner to be added. Other conditioners such as formaldehyde may also be used. Use of formaldehyde (0.4% by weight) greatly increases the strength and abrasion resistance of the granules which significantly lowers dust formation. Typical operating data are shown in table 1.

Norsk Hydro Pan Granulation (7)

Norsk Hydro A.S., Porsgunn, Norway, has developed a high-temperature process for pan granulation of fertilizers including urea. The process has been named the High Temperature Pan Granulation (HTPG) technique. A description of the process is given in a paper, "Pan Granulation of Ammonium Nitrate and Urea," by O. Skauli, presented at the ACS Annual Meeting in Atlantic City, N. J., in September 1974. Patents for the technique have been applied for. The process employs a pan granulator of conventional design. However, since the process operates at temperatures very close to the crystallization temperature, close control of the pan parameters is necessary. The primary control is the location of the solid feed (recycle) point to the pan. Norsk Hydro reports that 80% of the material in the pan discharge is on-size (2-4 mm) and that the recycle ratio (solid to melt) is about 1. The particles are three times harder than prills of the same size and exhibit good storage and handling properties.

Figure 4 is a simplified flowsheet of the process. Melt and recycled undersize are added to the pan. On-size material is discharged from the pan to a polishing drum and then to a cooler which can be either fluid-bed or rotary type. The cooler discharge is screened to separate the oversize, on-size, and undersize fractions. The oversize is crushed and recycled to the pan along with the undersize and dust from the dust-control system. Although this technique has been used to produce granular amonium nitrate on a commercial scale, urea has been produced only on a pilot scale. However, N-Ren Corporation of Cincinnati has announced plans to install several 300 short tons/day (270 metric tons/day) skid-mounted units in Africa which employ this technology.

C & I Girdler Spherodizer Granulation (4)

Attempts to granulate urea or ammonium nitrate in conventional drum granulators have not been successful. These processes use agglomeration to form granules that are irregular in shape and inherently weak in the case of urea and ammonium nitrate. The Spherodizer, which is a proprietary drum granulator process, is designed to avoid agglomeration and promote a layering type granulation. The process is well proven commercially as evidenced by 6,220 short tons/day (5,598 metric tons/day) of either newly installed or newly announced capacity in addition to three original plants built in Canada. Four other plants with a total daily capacity of 4,500 short tons/day (4,050 metric tons/day) are being engineered at present. Complex fertilizers were first produced in a Spherodizer in 1958 and production of granular urea and ammonium nitrate was introduced in 1965.

A simplified flowsheet is given in figure 5. Molten urea is sprayed inside a rotating drum onto a rolling bed of solid particles. As a result of the rolling action, the particles are coated with thin layers of liquid and gradually build up to hard spherical granules. Cooling air is drawn through the drum countercurrent to the flow of granules. Dust removed by the cooling air is collected in an impingement type wet scrubber and the liquor is recycled to the concentration section of the urea unit. After cooling, the granules flow to a conventional screening section for separation of oversize, on-size, and undersize. The oversize is crushed and returned to recycle along with the undersize. The product size is treated with conditioner, if desired, and transferred to storage. Typical operating data are shown in table 2 for production of urea by the Spherodizer process at a production rate of 335 short tons/day (302 metric tons/day) and a recycle ratio of 2.

Additional details may be obtained by contacting C & I Girdler Inc., Louisville, Kentucky.

Fisons Granular Urea Process

Fisons of London has operated a pilot plant to produce granular urea in a rotary drum granulator. According to

Table 1. Typical operating data--urea pan granulation

Production rate, short tons/hour (nominal)	8.5 (7.65 mt/hr)
Pan granulator	
Speed, rpm	18 to 19
Slope, degrees	60
Number of sprays	10
Urea, 75% solution from plant	
Temperature, °F (°C)	200 (93)
Concentrated melt to granulator	
Temperature, °F (°C)	285 (141)
Concentration, % by mt	98.5-99.5
Granulation	
Recycle Temperature, °F (°C)	140 (60)
Ratio, lb/lb product	2.5 to 3.0
Granulator temperature, °F (°C)	200-215 (93-102)
Cooler Temperature, °F (°C)	110 (43)
Product Chemical Analysis, %	
Total N	45.5
Biuret	1.1
H_2O (Karl Fisher)	0.1 to 0.2
Conditioner	
Oil-wax mixture	0.3
Clay	0.7
Screen analysis, % (Tyler)	
+ 6 mesh (+ 3.3 mm)	0
- 6 + 10 mesh (-3.3 mm + 1.7 mm)	85
-10 + 16 mesh (-1.7 mm + 0.99 mm)	15
- 16 mesh (-0.99 mm)	0

Table 2. Typical operating data—urea Spherodizer granulation

Melt temperature, °F (°C)	280 (138)
Melt concentration, %	99.3
Moisture in product, %	0.06
Air inlet temperature, °F (°C)	50 (10)
Production rate, short ton/day in 14 foot-diameter drum (mt/day)	335 (302)
Recycle ratio (recycle/product)	2
Product temperature, °F (°C)	110 (43)

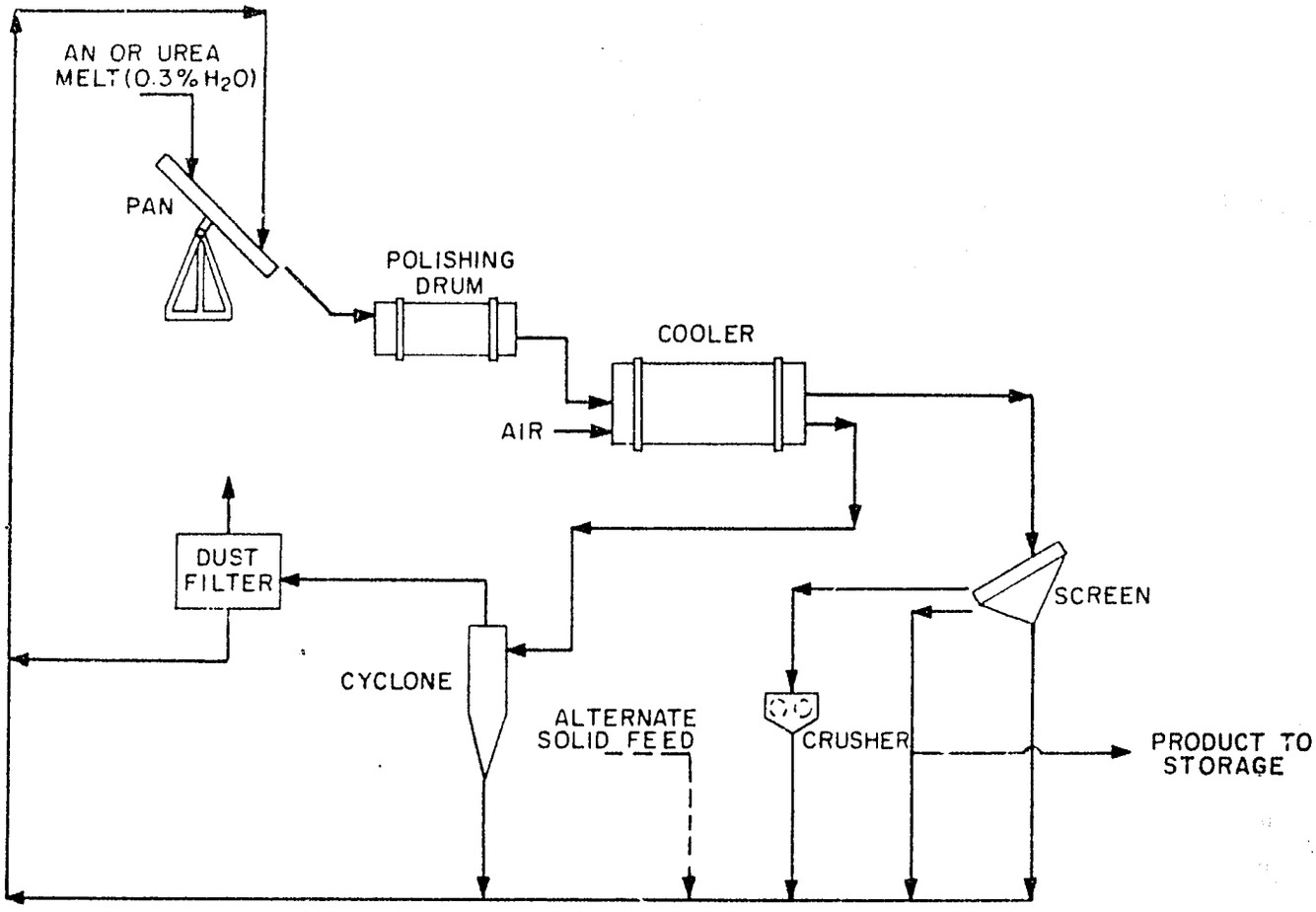

FIGURE 4
NORSK HYDRO PAN GRANULATION PROCESS FOR AMMONIUM NITRATE OR UREA

their literature, urea solution of more than 99% concentration from a conventional evaporation unit is introduced as a spray to the granulator where it contacts a recycled stream of fines; the recycle ratio is 2 to 3 pounds per pound of product. Granulation occurs at a high temperature and low moisture content. After granulation, material flows to a cooler, which may be a rotary drum or fluidized bed type where some moisture is removed and material is reduced in temperature. In the process no drier is used. After cooling, the material is screened with crushed oversize and fines returned to the granulator. Dust from the system is recovered by wet scrubbing and returned to the urea concentration step.

Fisons offers to design and operate plants of up to 1,000 metric tons/day capacity based on the process. Additional details probably can be obtained by writing to the company.

Conversion from Prilling to Granulation

Existing plants that are equipped for prilling may be converted to granulation by using the prilled urea as a feed for the granulation unit. In this case the granulation unit serves to build up the size of the prills to the desired level by layering. This modification has been demonstrated with the Norsk Hydro pan granulation process, and presumably could be used with the other granulation processes.

Solids Recovery

A part of the decision to produce granular urea involves not only choice of the process but choice of the dust recovery method as well. The TVA process utilizes impingement type wet scrubbers which were previously installed for another process. The Spherodizer process usually employs wet scrubbing. However, dry collection and a bag filter could be used with either the pan granulation or the drum granulation process. Bag filters usually require more maintenance than wet scrubbers but they do achieve a very low level of particulate matter in the effluent stack gas.

Wet Scrubbing

A wet scrubbing system of the type envisioned for a new plant has been included on the flowsheet for the TVA process, figure 2. A separate system is used for each of the coolers and another for the fugitive dust control system. Each consists of a heated cyclone, wet scrubber, circulation pump, blower, and liquor tank; gas from the three scrubbers is vented to a common stack. Dust from the cyclones is dissolved in the scrubber liquor. The scrubber liquor is collected and fed back to the concentration section. As a variation, the liquor tank and pump could be common to the three systems.

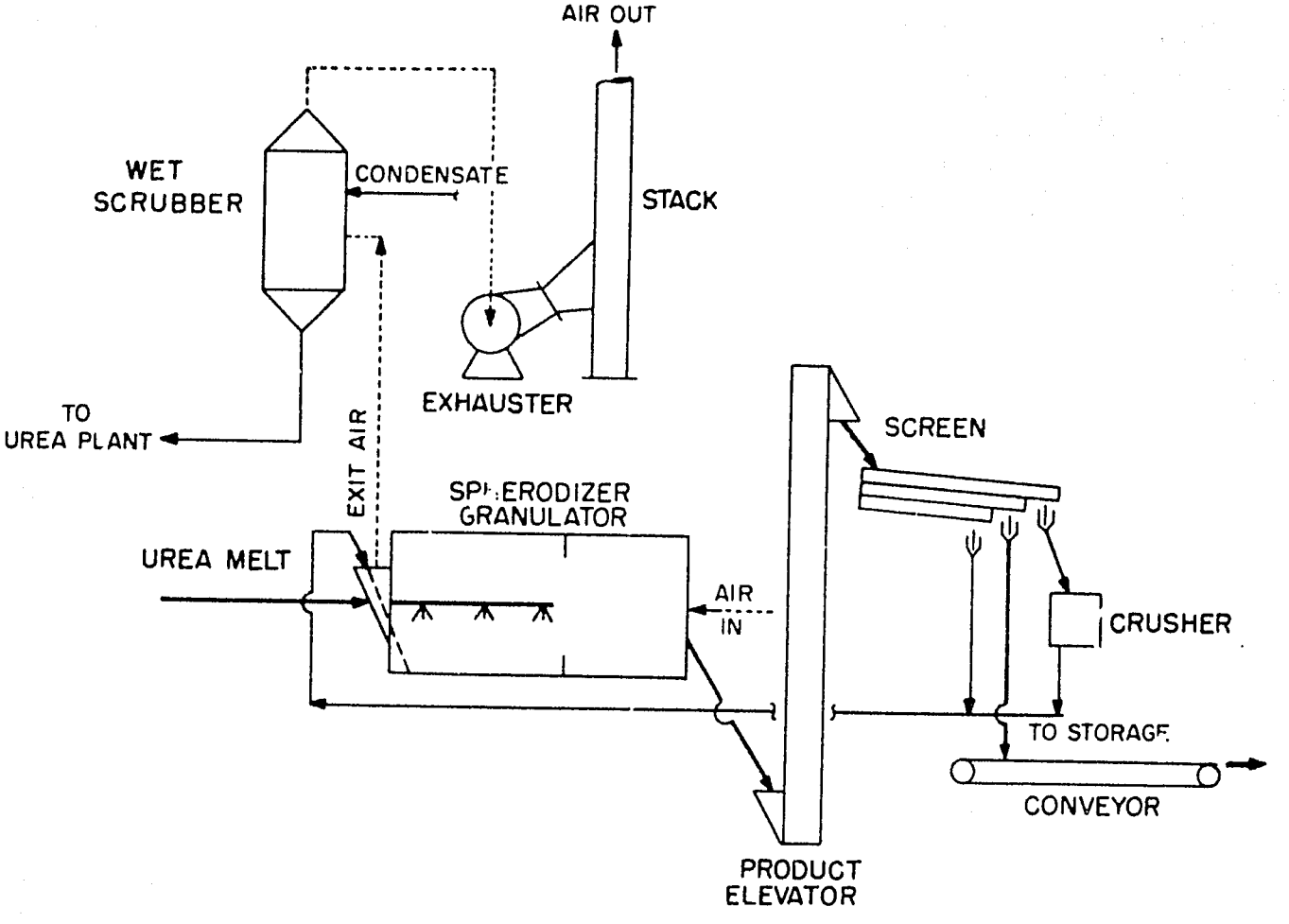

FIGURE 5
C & I GIRDLER UREA SPHERODIZER PROCESS

Table 3. Summary of investment, production cost, and in-plant price for pan-granulated and prilled urea[a]

	Pan Granulation		Prilling	
Nominal Capacity				
Short ton/day	400	1,000	400	1,000
Short ton/year	132,000	330,000	132,000	330,000
Plant investment, $	1,850,000	3,559,000	1,860,000	2,900,000
Working capital, $	175,000	324,000	129,000	194,000
Total Capital Investment, $	2,025,000	3,883,000	1,969,000	3,094,000
Production cost, not including urea feed, $/short ton	4.79	3.64	3.63	2.18
Return @ 20% pretax on Total Capital Inv.	3.07	2.35	3.00	1.88
In-plant price, $/short ton	7.86	5.99	6.63	4.06
Cost difference, $/short ton	+ 1.23	+ 1.93	-	-

[a]Based on estimate of middle 1974; no escalation is included.

Dry Collection

Figure 6 shows the TVA process with a dry collection system. The dust is collected through a system of ducts and conveyed pneumatically to bag filters. In such a system, which is highly automated, a programmed sequence of events allows air to be diverted from one section while it undergoes vibration to clean the bags. After cleaning, the cycle reverses to the previously used section.

A very important consideration in designing a dry collection system is flexibility to allow either dissolving the dry collected dust or returning it dry to the granulator. *None of the granulation processes operate well if there is a high proportion of dust in the recycle.* Therefore, it may be necessary at times to dissolve the dust from the cyclones and bag filters and the crushed oversize and feed it back as a liquor into the concentration section. The concentrator should have this additional capacity designed in at the beginning.

Comparative Cost of Granulation and Prilling

TVA has recently compared the cost of pan granulated urea with prilled urea in plants designed for 400 and 1,000 short tons/day (360 and 900 metric tons/day) (8). No commercial unit is known to exist for the pan granulation of urea as considered in the estimate. It was necessary to factor the costs of individual items to the capacity needed. Table 3 shows the results of the estimate for U.S. Gulf Coast, mid-1974 time period. Based on this preliminary estimate, granular urea may cost $1 to $2/short ton more than prilled urea. However, the prilling tower may require more sophisticated equipment for dust removal than the simple system used in the estimate. Also, the process cooler envisioned for the pan granulation process is very large and costly. It may be possible to substantially reduce the size of this cooler and add a small cooler for the product stream. The net effect of these two changes would be to reduce or perhaps eliminate the cost difference between products from the two processes.

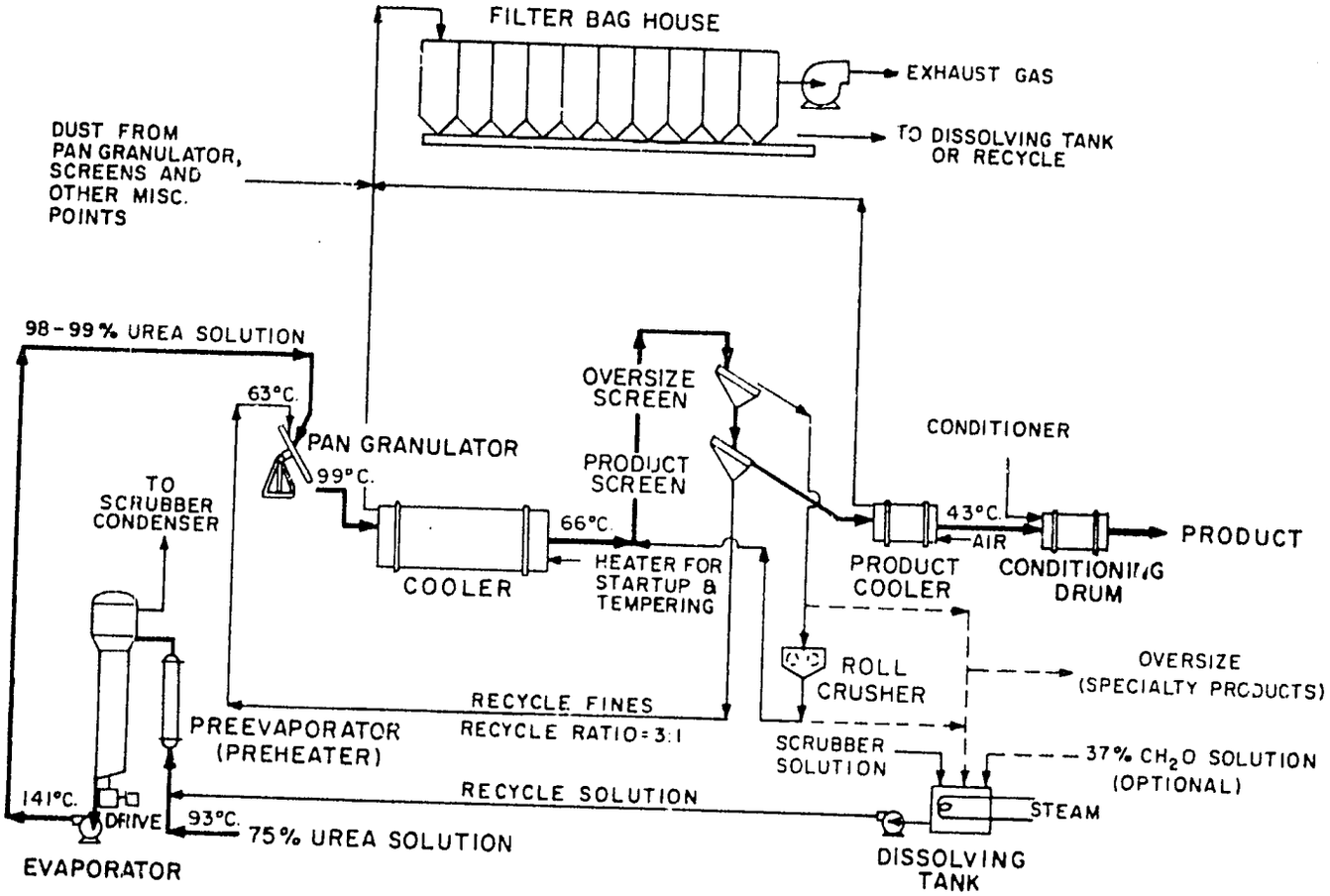

FIGURE 6
PAN GRANULATION PROCESS FOR GRANULAR UREA
(WITH FILTER BAG HOUSE)

Equipment cost, installation cost, and production costs will be higher for a developing country situation.

Urea Super Granules

Production of super granules (4-6 gms) of urea in the form of round spherical particles has not yet been attempted. Batch quantities of cylindrical-shaped particles have been produced at TVA for agronomic tests in the Philippines, Indonesia, India, Thailand, Sri Lanka, and Malaysia. If the results are favorable, IFDC plans to sponsor test production of super urea granules in TVA's pilot-plant facilities.

The main application of urea super granules in Asia may be in areas where surplus labor is readily available and where these granules may be individually placed at specific depths within the rice paddy.

References

1. Hargett, Norman L., "1974 Fertilizer Summary Data," TVA, Muscle Shoals, Alabama.

2. Hoffmeister, George, and C. P. Harrison, "Physical Testing of Fertilizers," presented at 170th ACS National Meeting, Chicago, Ill., August 26-28, 1975.

3. Waggoner, D. R., I. W. McCamy, G. C. Hicks, and J. R. Gahan, "TVA Pilot-Plant Development Work and Demonstration-Plant Experience in Pan Granulation of Urea," proceedings of the 24th Annual Meeting Fertilizer Industry Round Table 1974, Washington, D. C.

4. Reed, R. M., and J. C. Reynolds, "Progress Report on Spherodizer Granulation of Anhydrous Melts," proceedings of the 24th Annual Meeting Fertilizer Industry Round Table 1974, Washington, D. C.

5. Meline, R. S., I. W. McCamy, J. L. Graham, and T. S. Sloan, "Plant-Scale Production of Fertilizers in a Pan Granulator," CD 478, TVA, Muscle Shoals, Alabama.

6. Young, R. D., and I. W. McCamy, "TVA Development Work and Experience with Pan Granulation of Fertilizers," The Canadian Journal of Chemical Engineering, Vol. 45, pp. 50-56, February 1967.

7. Skauli, O., "Pan Granulation of Ammonium Nitrate and Urea," Norsk Hydro A.S., presented at ACS Annual Meeting, Atlantic City, N.J., September 1974.

8. TVA Bulletin Y-92, "Urea Costs, Granulation vs. Prilling," TVA, Muscle Shoals, Alabama.

Additional copies may be obtained for no charge by writing:

International Fertilizer Development Center (IFDC)
Suite 402
First Federal Building
Florence, Alabama 35630

or

Tennessee Valley Authority
TVA-NFDC Technical Library
Muscle Shoals, Alabama 35660