PLANT REQUIREMENTS FOR MANUFACTURE OF STAINLESS STEEL UTENSILS

DEPARTMENT OF STATE
AGENCY FOR INTERNATIONAL DEVELOPMENT
COMMUNICATIONS RESOURCES DIVISION
Washington 25, D. C.

FOREWORD

This brochure is one of a series of reports resulting from overseas technical inquiries on factory or commercial establishments, operation, management, and engineering. The report is designed to provide only a general picture of the factors that must be considered in establishing and operating a factory of this type. In most cases, plans for actual installations will require expert engineering and financial advice in order to meet specific local conditions.

Mention of the name of any firm, product, or process in this report is not to be considered a recommendation or an endorsement by the Agency for International Development, but merely a citation that is typical in its field.

****

The original report was prepared by the Office of Technical Services, U. S. Department of Commerce.

****

This report has been revised and rewritten by Vitro Engineering Company, a division of Vitro Corporation of America, Washington Branch, 1025 Connecticut Avenue, N. W., Washington, 6, D. C.

For further information and assistance, contact should be made with the local Productivity Center, Industrial Institute, Servicio, or United States AID Mission.

Code Number
PR 106

March 1962

ACKNOWLEDGEMENT

The author gratefully acknowledges the cooperation and technical information provided for this report by the following representatives of machine tool manufacturers:

American Machinery and Supply Company
1812 N. Street, N. W.
Washington 6, D. C.

Secrest Machine Corporation
2772 South Randolph Street
Arlington 6, Virginia

Illustrations of the metal spinning lathe and the hydraulic press respectively, were provided by:

Boice-Crane Company, Toledo, Ohio

Hannifin Press Company, Des Plaines, Illinois

Special thanks are extended to Mr. R. L. Beasley of American Machinery and Supply Company for his helpful assistance in reviewing the report manuscript prior to publication.

CONTENTS

	Page
Introduction	1
General Assumptions	2
Product Specifications	3
Production Capacity	5
Manufacturing Unit	5
Manufacturing Operations	5
Plant Site	9
Building	9
Power	9
Water	9
Fuel	9
Direct Labor	11
Indirect Labor	11
Direct Materials	11
Supplies	12
Production Tools & Equipment	12
Other Tools and Equipment	13
Furniture and Fixtures	13
Depreciation	14
Manufacturing Overhead	14
Manufacturing Cost	15
Fixed Assets	15
Working Capital	15
Capital Requirements	16
Sales Revenue	16
Recapitulation of Costs, Sales and Profits	17
Budget Control	18
Budget Control Accounts	19
Purchase Requisition Form	20
Voucher Check	21
Engineers	22
Training	23
Safety	24
Summary	25
Other Considerations	26
Materials & Supplies	26
Market Factors	26
Export Markets	27
Marketing Problems	27
Financial Factors	28
Financial Requirements of the Project	28
Short Term Bank Credits	28
Financial Plan	28
Economic Factors	29
Personnel	29
Laws and Regulations	29
Bibliography	30
Technical and Trade Associations	30

INTRODUCTION

The purpose of this report is to present basic information for establishing a small factory to manufacture stainless steel utensils in a foreign country.

Stainless steel, a corrosion and heat resistant alloy, is very suitable for the fabrication of utensils to be used in restaurants, hospitals, military institutions, industries, or homes.

Small utensils of this type, up to 5 inches in diameter, are usually pressed or drawn on a light hydraulic press; while those over 6 inches in diameter are spun on a lathe. They may be producted in a variety of types and sizes such as shallow or deep bowls, cups, pans, and pots; and narrow or wide-necked jugs or cylinders.

It is suggested that only simple shapes be processed at first to suit the local needs; later, the types of items can be widely diversified, and the production rate increased to comply with an expanding domestic market. Although stainless steel goods are comparatively high priced, there should be sufficient demand for them in an industrially developing country. However, homes would probably be the last to buy these items, due to their price. For household use, further processing such as the addition of handles, knobs, and lids would be necessary if saucepans, kettles and cooking pots were to be manufactured.

The plant proposed herein is about the minimum feasible size. It will require a modest capital investment in machinery and tools, and a small labor force of skilled metal workers.

GENERAL ASSUMPTIONS

In order to make realistic cost estimates in this report, it is necessary to make the following assumptions:

1. The costs of the building and general facilities are based on United States prices.

2. Material and equipment costs are based on sizes and specifications current in the United States.

3. Labor costs are based on the average for the industry as recently published by the United States Bureau of Labor Statistics.

4. Adequate and suitable water, power, sewerage, and transportation facilities are available at the plant site.

5. This plant operates eight hours a day, five days a week, fifty weeks a year.

6. The plant manager and the press and lathe operators are capable and experienced men able to do all the labor training necessary. It is assumed that learner's rates will be paid in such cases and that the costs can be charged under unforseen expenses.

7. The following items cannot be estimated realistically:

   a. Land value

   b. Distribution and selling costs

   c. In-freight and out-freight

   d. Administrative costs

   e. Taxes

   Approximate estimates are made for each of these items, with the exception of taxes, for the purpose

of completing cost estimates; however, adjustments should be made in accordance with actual local costs.

8. All cost estimates contained in this report are to be adjusted to conform to local conditions. Columns are provided in the tables included in this report to facilitate conversion of cost figures to those existing locally.

PRODUCT SPECIFICATIONS

All information and costs contained in this report are based on the initial production of two types of utensils: (1) a small pressed bowl approximately 5 inches in diameter and 5 inches deep; and (2) a large spun pot approximately 8-1/2 inches in diameter and 6 inches deep. Figure 1 (C and L) shows these suggested types and also includes other typical shapes which might be added when the market warrants, as the requisite dies, spinning tools, and chucks, are included in the list of equipment.

Stainless steels are a large and complex group of alloys containing chromium and/or nickel. They are highly resistant to corrosion and oxidation and maintain considerable strength at high temperatures.

American Iron and Steel Institute (AISI) Ferritic Type 430 stainless steel sheet (20-22 gage thickness) is recommended for fabricating the above utensils. This type is quite low in carbon, has more than 16% chromium, and small percentages of silicon, and managanese. It is quite ductile, may be hot-or-cold-worked, machines satisfactorily, can be welded, has superior corrosion and heat resistance, finishes to a high luster, and is relatively inexpensive.

Stainless steel sheets usually are supplied by the mill protected by an adhesive paper. This must be removed during the manufacturing process and the end product given a final polishing. A new strippable plastic film has been developed that does not require removal. This film reduces wear on polished dies; often eliminates the need for lubricants, strips easily, leaves no residue, and eliminates the final polishing. This protective film is not generally available, but may be obtained on customer order from the Washington Steel Corporation, Product Development Dept., 9-F Woodland Avenue, Washington, Pennsylvania. The cost is 20% less than the paper and additional savings are possible through reduced die wear and the elimination of polishing costs.

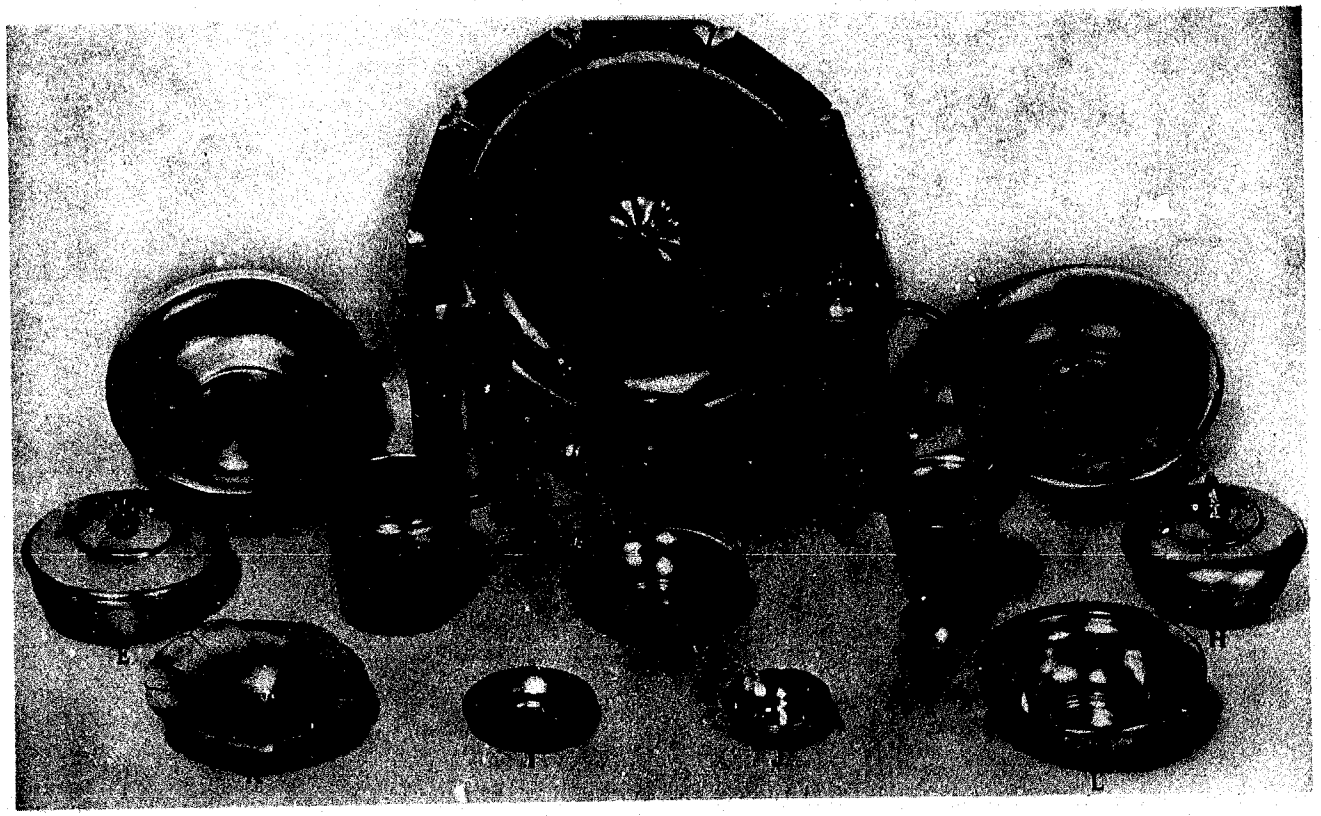

Figure 1. Some Typical Utensil Shapes

PRODUCTION CAPACITY

This plant has an annual production capacity of 50, 000 large and small utensils. Annual Production for the large utensil is estimated at 12, 500, or 50 per day; and for the small bowl 37, 500, or 150 per day. This minimum output can be easily realized by the present labor force using a manual-feed lathe; however, for a higher output of the large spun vessels, it would be advisable to use an automatic-feed lathe which would cost approximately $11, 000, including tools and chucks.

MANUFACTURING UNIT

The manufacturing unit is the individual utensil, large or small.

MANUFACTURING OPERATIONS

In producing the recommended utensils, the following manufacturing procedures are required:

Shearing - The steel sheets are cut to form the appropriate size discs with the circular shear. The discs are then delivered to either the spinning lathe or the draw press.

Spinning - The larger discs are turned into a hollow shape by the pressure of an appropriate tool against a spinning chuck which is the exact size and contour of the utensil to be formed. Figure 2 shows a typical manual-feed lathe. The use of an offset spindle and off-center roll tool allows fast and easy spinning of utensils with bulging sides and narrow necks, as shown in the inset of figure 2. Figure 3 illustrates typical types of tools and accessories for the lathe.

Drawing - The smaller discs are fed into the 15-ton hydraulic press for the first drawing (cupping) operation. Figure 4 shows a typical draw press. The operator prepares the punch and specific die applicable to the utensil to be drawn; oils and sets up the equipment. The flat disc is pushed through the hole in the die forcing the metal to flow up around the punch, (cold plastic drawing) to form a fairly deep cup as shown in the inset of figure 4. The drawn cup is then heat-treated (annealed) to remove stresses and to soften it for the second cupping operation. The second cupping forms the final utensil shape.

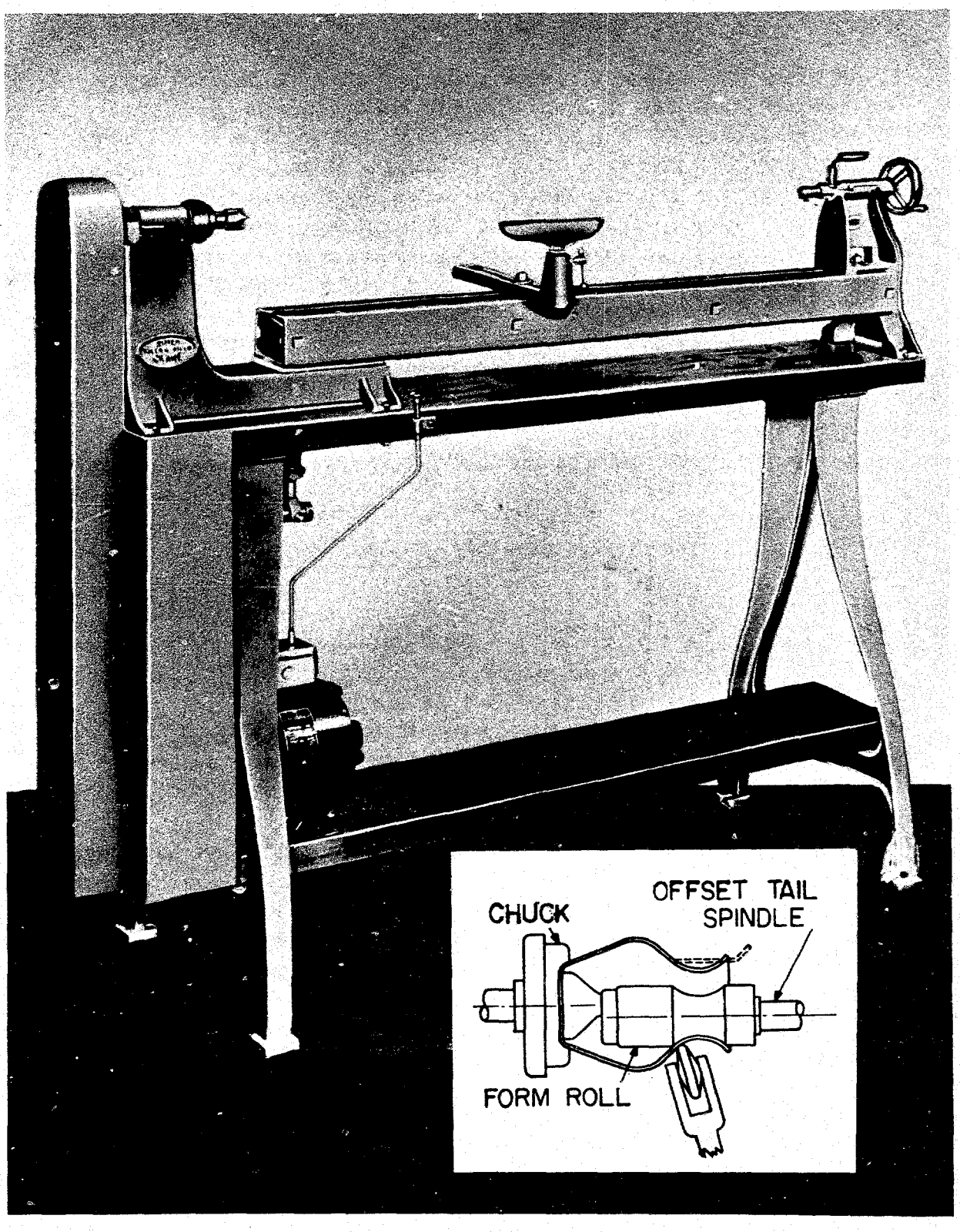

Figure 2. Manual-feed Spinning Lathe

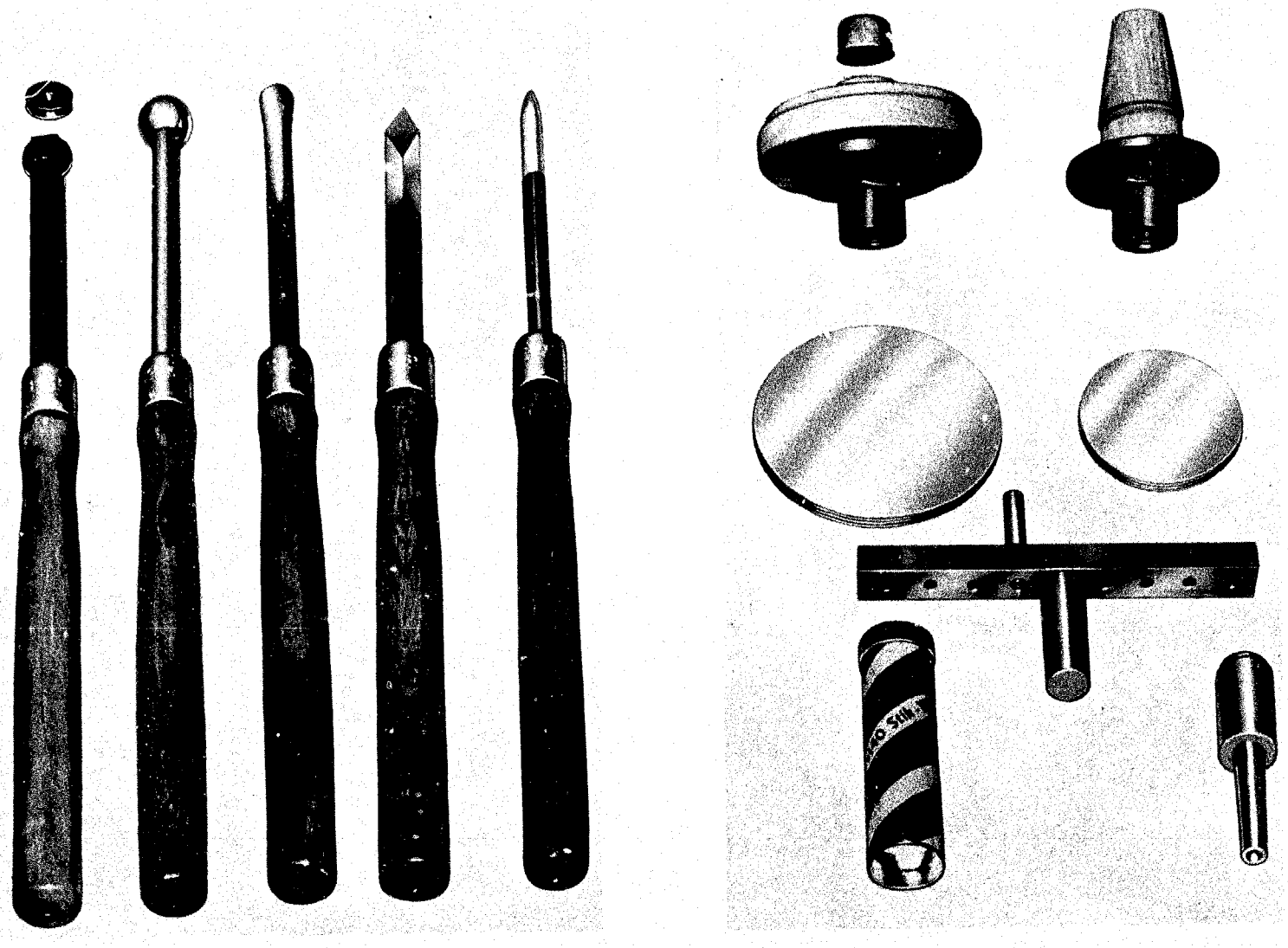

Figure 3. Typical Lathe Tools and Accessories

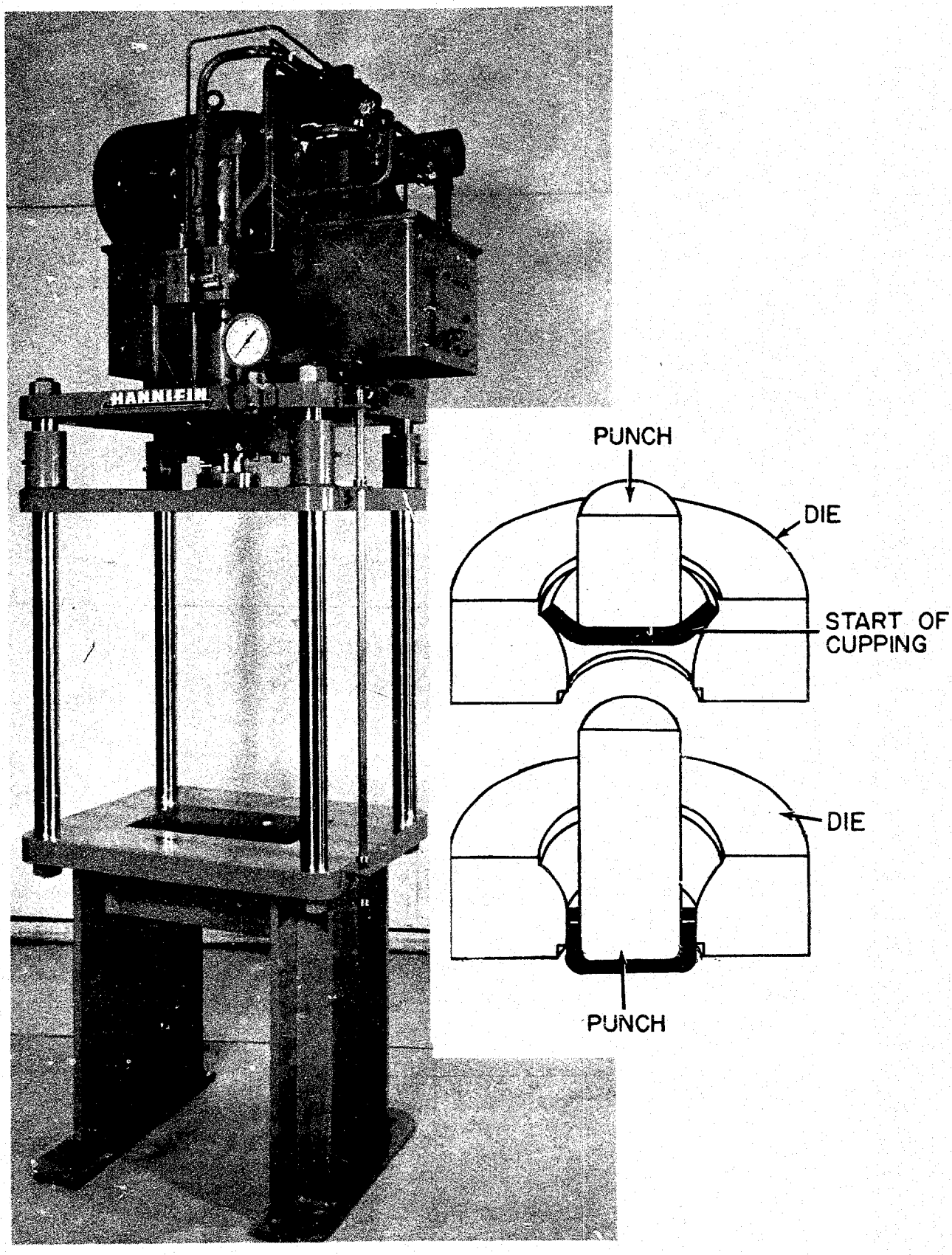

Figure 4. 15-ton Hydraulic Press

Trimming, Gaging - The excess edges are trimmed off with hand tools and the utensil gaged for size.

Polishing - The utensils are polished to a high luster with a hand polisher, after which they are inspected and sent to shipping or storage.

Scrap - Metal left over from the shearing and trimming operations can be sold to mills and foundries.

PLANT SITE

Approximately 6000 square feet will be required to accommodate the building and to allow for normal future expansion. It should be located as advantageously as possible with respect to transportation, power, water, fuel, sources of labor, and a substantial market for its finished products. The cost of the land is estimated at $600.

BUILDING

About 2400 square feet of floor space, which would be provided in a one-story building approximately 40 by 60 feet will be required. The building may be constructed of any fire-proof material. The cost of the building, including all utilities, is estimated at $9, 600. Figure 5 shows a proposed plant layout and indicates the workflow.

POWER

The total connected power requirements for this plant are approximately 11. 2 kilowatts per hour. The annual power cost is estimated at $300 based on 1. 3 cents per kilowatt hour. Even in the United States, power costs vary considerably with locality.

WATER

The annual water requirements for sanitation and fire protection are estimated at $100.

FUEL

The annual requirement of fuel for heating, if necessary, oil or its equivalent, is about 4000 gallons. The cost of fuel is estimated at $400.

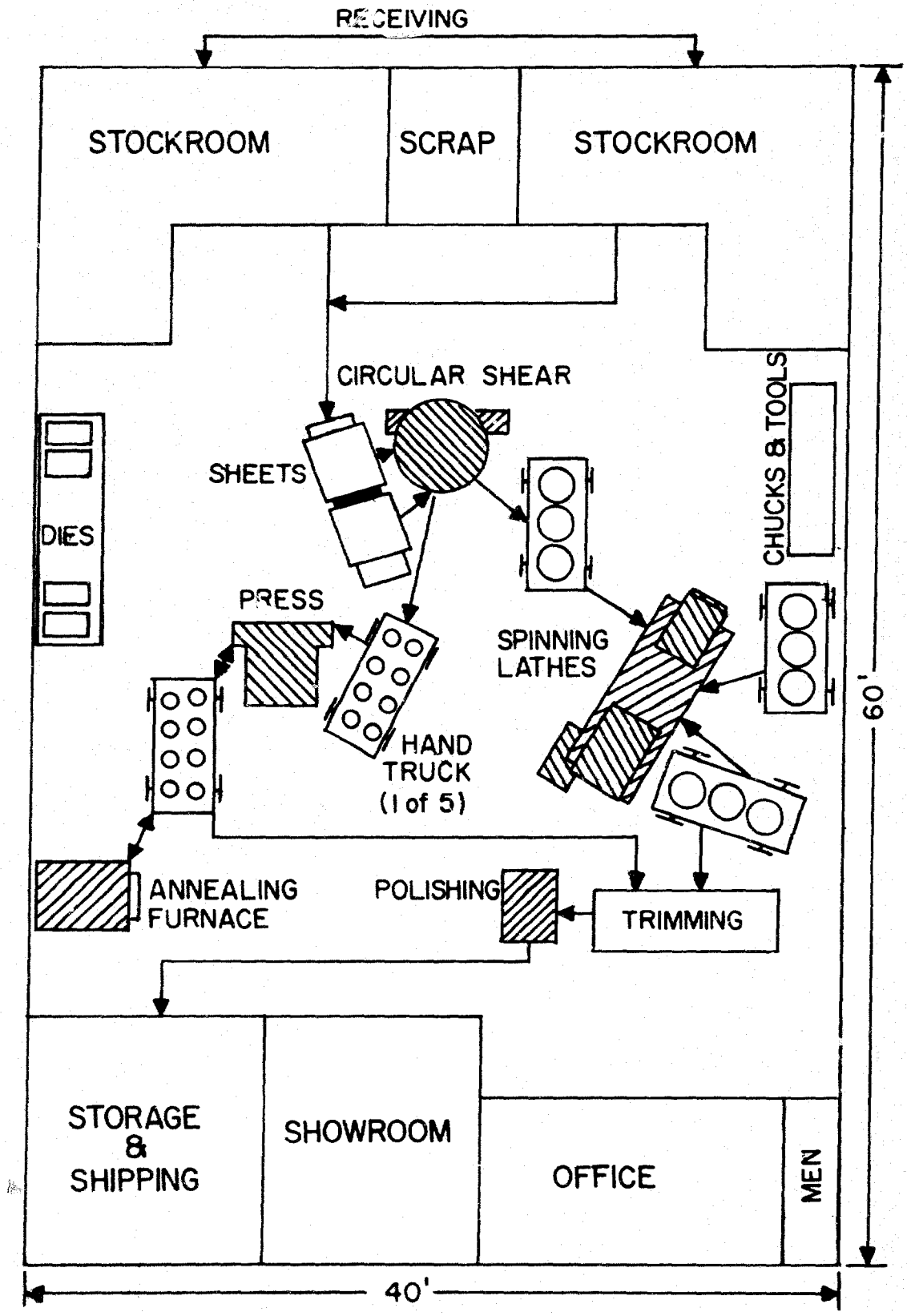

Figure 5. Plant Layout and Workflow

DIRECT LABOR

Five workmen, three skilled and two semi-skilled, as listed in the following table are sufficient to accomplish the manufacturing operations.

Occupation	Number Required	Hourly Rate	Annual Cost Estimated	Annual Cost Actual
Press Operator	1	$2.50	$ 5,200	
Lathe Operator	2	2.50	10,400	
Shop Men	2	2.00	8,320	
Total			$ 23,920	

INDIRECT LABOR

Since this is a relatively small operation, employing very few personnel, all managerial, purchasing, and sales functions can be handled by the Plant Manager and no other indirect labor will be required. The annual salary of such a Plant Manager is estimated at $8,000.

DIRECT MATERIALS

Item	Unit	No. of Units	Unit Cost	Annual Cost Estimated	Annual Cost Actual
Stainless Steel Sheets	Pound	52,500	$ .70	$ 36,750	

Note: This price includes handling and in-freight charges.

SUPPLIES

Item	Annual Costs Estimated	Annual Costs Actual
Maintenance and parts	$ 600	
Lubricants and tools	250	
Office supplies	150	
Total	$ 1,000	

PRODUCTION TOOLS AND EQUIPMENT

Description	Number Required	Estimated Cost Unit	Estimated Cost Unit	Actual Cost
Circle Shear	1	$ 450	$ 450	
Hydraulic Press motor, cups etc.	1	6,500	6,500	
Drawing Dies (3-sets for first drawing operation)	1	1,000	1,000	
Drawing Dies (3-sets for final drawing operation)	1	1,000	1,000	
Trimming Tools	1 set	150	150	
Spinning Lathe, (complete with motor, tools, and accessories)	2	500	1,000	
Annealing Furnace	1	1,500	1,500	
Hand polishing machine	1	200	200	
Total			$ 11,800	

Note: Prices are based on boxed for export, f. o. b.

OTHER TOOLS AND EQUIPMENT

Description	Number Required	Unit Cost	Cost Estimated	Cost Actual
Hand trucks	5	30	$ 150	
Work benches	2	45	90	
Tools, stock carts, etc.			110	
Total			$ 350	

FURNITURE AND FIXTURES

Description	Number Required	Unit Cost	Cost Estimated	Cost Actual
Desk and chair set	1	$ 130	$ 130	
Typewriter and table	1	110	110	
Adding machine	1	110	110	
File cabinet	1	50	50	
Clothing locker	5	20	100	
Drinking fountain	1	100	100	
Shelving in showroom		100	100	
Total			$ 700	

DEPRECIATION

Description	Estimated Cost	Years Life	Per Year Estimated	Per Year Actual
Building	$ 9,600	20	$ 480	
Production tools and equipment	11,800	10	1,180	
Other tools and equipment	350	10	35	
Furniture and fixtures	700	10	70	
Total	$ 22,450		$ 1,765	

MANUFACTURING OVERHEAD

Item	Cost Estimated	Cost Actual
Depreciation	$ 1,765	
Indirect labor	8,000	
Power	300	
Water	100	
Fuel	400	
Supplies	1,000	
Total	$ 11,565	

MANUFACTURING COST

Item	Cost Estimated	Cost Actual
Direct materials	$ 36,750	
Direct labor	23,920	
Manufacturing overhead	11,565	
Total	$ 72,235	

FIXED ASSETS

Item	Cost Estimated	Cost Actual
Land	$ 600	
Building	9,600	
Production tools and equipment	11,800	
Other tools and equipment	350	
Furniture and fixtures	700	
Total	$ 23,050	

WORKING CAPITAL

Item	Cost Estimated	Cost Actual
Direct materials, 30 days	$ 3,063	
Direct labor, 30 days	1,993	
Manufacturing overhead, 30 days	964	
Reserve for sales collections, 30 days	416	
Total	$ 6,436	

CAPITAL REQUIREMENTS

Item	Cost Estimated	Cost Actual
Fixed assets	$ 23,050	
Working capital	6,436	
Total	$ 29,486	

SALES REVENUE

The annual production capacity of this plant is rated at 12,500 large and 37,500 small units.

The approximate selling price of each large utensil is estimated at $3.47, giving an annual sales revenue of $43,375. The approximate selling price of each small utensil is estimated at $1.49, giving an annual sales revenue of $55,875.

The total annual sales revenue for both types is estimated at $99,250.

RECAPITULATION OF COSTS, SALES AND PROFITS

Item	ANNUAL COSTS Estimated	Total	Actual
Direct Materials	$ 36,750		
Direct labor	23,920		
Manufacturing overhead	11,565		
Total manufacturing costs		$72,235	
Interest on loans	500		
Insurance	300		
Legal	150		
Auditing	250		
Unforseen expense	1,000		
Total administrative costs		2,200	
Total sales costs *		5,000	
Profit before taxes		19,815	
Total annual gross sales		$99,250	

* Includes Sales Commissions, Travel, Freight-out, Discounts and Allowances, etc.

BUDGET CONTROL

A requisition form designed to provide accurate records of procurement and indicate the purpose of procurement with the least amount of time and effort is shown on page 20.

This form has an account number for each type of the various expenditures which the manager will review in detail, monthly or oftener, in order to control his expenses. Some items, such as power and water, are usually under contract and are easily checked by reference to monthly bills. For simplification, items (marked with an asterisk in the table on page 19) are omitted from the purchase requisition. Variations in the labor costs are easily reviewed by examination of the payroll vouchers. The simplified type of control thus provided makes certain that the manager can control expenditures promptly.

In addition to the requisition form, a sample voucher check is shown on page 21. Voucher checks should be used for the payment of all expenditures and the appropriate book account number placed on each voucher.

At the end of each month the manager will receive a statement of all expenditures broken down by budget accounts, as shown on page 19. If the expenditures exceed the budgeted monthly allowances of any of the accounts, the bookkeeper will furnish the manager with a breakdown of all expenditures relative to the budgeted accounts exceeded. All these supporting data can be secured by reference to the purchase requisitions and the check vouchers. This reference will enable the manager to determine what caused the over-expenditure and take corrective action.

If at any time during each month it becomes apparent that expenditures will exceed any of the budget accounts, the bookkeeper will bring this to the attention of the manager for his information and action.

BUDGET CONTROL ACCOUNTS

Account Number	Monthly Expense	Monthly Budget	Annual Budget	Actual
10 Administrative		$ 100	$ 1, 200	
20 Sales		416	5, 000	
30 Direct Materials		3, 063	36, 750	
40 Supplies		83	1, 000	
51 Power *		25	300	
52 Water *		8	100	
53 Fuel		33	400	
60 Unforeseen Expense (Reserve Account)		84	1, 000	
71 Direct Labor *		1, 993	23, 920	
72 Indirect Labor *		666	8, 000	
80 Depreciation (Reserve Account)		147	1, 765	
Total		$ 6, 618	$ 79, 435	

PURCHASE REQUISITION	COMPANY NAME	DATE

☐ 10 ADMINISTRATION ☐ 40 SUPPLIES

☐ 20 SALES ☐ 50 UTILITIES

☐ 30 MATERIALS ☐ 60 UNFORESEEN EXPENSE

INDICATE BELOW THE USE OF MATERIALS

☐ DIRECT MATERIALS ☐ MAINTENANCE SERVICES

☐ MAINTENANCE MATERIALS ☐ OPERATING SUPPLIES

	PLEASE ORDER THESE MATERIALS OR SERVICES	DELIVERY WANTED	
QUANTITY	DESCRIPTION	UNIT	TOTAL

QUOTES FROM		REQUISITIONED BY	
QUOTES FROM		APPROVED BY	
QUOTES FROM		ORDER NO.	ORDER DATE

R. W. MITCHELL MANUFACTURING COMPANY

1422 BOSWORTH STREET, S. E.

65-22
514

ANYWHERE, U. S. A._____19____ No. 10000

PAY_____DOLLARS $_____

TO THE ORDER OF

R. W. MITCHELL MANUFACTURING COMPANY

TO FIRST NATIONAL BANK
ANYWHERE, U. S. A.

BY SAMPLE CHECK

VICE PRESIDENT

ACCOUNT NUMBER

Sample voucher check to be used for the payment of all expenditures in connection with Budget Control.

R. W. MITCHELL MANUFACTURING COMPANY

ENGINEERS

The services of professional engineers are desirable in the design of this plant, even though the proposed plant is small.

A correct design is one which provides the greatest economy in the investment of funds and establishes the basis of operation that will be most profitable in the beginning and will also be capable of expansion without expensive alteration.

The addresses of professional engineers who specialize in industrial design, some of whom may be willing to undertake such work on low cost projects overseas, can be secured by reference to the published cards in various engineering magazines. They may also be reached through their national organizations, one of which is the

National Society of Professional Engineers
2029 K Street, Northwest,
Washington 6, D.C.

Manufacturers of industrial equipment employ engineers familiar with the design and installation of their specialized products. These manufacturers are usually willing to give prospective customers the benefit of technical advice by those engineers in determining the suitability of their equipment in any proposed project.

The equipment manufacturers also know, and can recommend, professional engineers in private practice who are willing and able to provide appropriate consulting services.

TRAINING

Manufacturing an inferior quality of product during the training period could create sales resistance that might be difficult to cope with later. To avoid such possibilities, the quality of the product should be maintained at all times, including the training period.

In some areas skilled operators may be available locally. In other areas all the operators may have to be trained.

If skilled operators are not available, adequate training would be assured by using one or more of the following methods:

A. If the plant is designed and installed by a competent engineering firm, the contract should be negotiated, if possible, on a turn-key basis. On this basis the contractor agrees to operate the plant and produce the quality and quantity of the product stated in the contract for an agreed period of time. Such a contract would assure adequate personnel training, since full quantity and quality could not be produced with an untrained organization.

B. The engineering firm that designs and installs the plant can usually make training arrangements to have key personnel placed, for training purposes, in a foreign industry that produces the same type of product. This would provide training for the key personnel while the plant is being installed.

C. If neither of the above methods is possible, then qualified and experienced individuals should be employed for the key positions, either permanently or temporarily, to perform the key operations and assist in training the organization, even if they must be secured outside the country.

D. The manager should have years of successful experience in this type of business and be fully qualified in all phases of management, including the training of employees.

SAFETY

There is always danger of accident and injury in any industrial plant. Because of this, the manager should take specific action to bring to the attention of each employee the importance of safety precautions and intelligent first aid.

Practically all machines have safety appliances, and the manager should see that these are in good working condition and that the operators are making full use of them.

In addition to constant watchfulness to make sure that all practicable safety precautions are taken, first aid supplies should be readily available. One complete first aid kit should be maintained near the manager's office, and others at appropriate places throughout the plant. Some of the employees should be trained to provide first aid service.

The use of accident posters in the plant have proved to be of value in reducing accidents. It is recommended that such posters be used, and that some direct special action be taken by the manager, at least once each month, to bring to the attention of all personnel the importance of safety precautions.

A fire brigade should be established and each member trained as to his responsibility in case of fire. Fire drills should be conducted periodically.

It is recommended that the employees be encouraged to offer suggestions or recommendations relative to prevention of accidents, removal of fire hazards and maintaining general interest in all safety factors.

SUMMARY

A small plant, built and operated according to the assumptions made in this report would be a profitable undertaking.

Provision is made for inserting local cost in connection with all cost figures shown in this report. A careful analysis should be made of all cost figures to determine the local potential profits in any location where such a plant is being considered.

There are some determinations, however, that should be made before a decision is reached to build and operate such a plant.

For example, what are the possibilities of future expansion within the country for this industry?

What other products could be manufactured with the machinery and equipment specified in this report?

Is there a market for such additional products?

How does this industry compare with other industries that may be needed in the country relative to the following factors:

1. The economic value to the country.

2. The needs of the majority of the people.

3. The amount of investment capital required.

Consideration should also be given to such factors as :

The amount of power required and the availability of a dependable supply. If an adequate supply is not available the installation of power equipment may be required.

The water requirements for all purposes including fire protection and potable water for drinking purposes.

The fuel requirements and availability. If local fuel can be used the boiler should be adaptable to such fuel.

The transportation facilities to and from the plant. If they are not adequate an investment in trucks may be required.

OTHER CONSIDERATIONS

There are other important subjects, shown below, that should be fully investigated and considered. Information on these subjects is usually available from such sources as banks, government agencies, exporters and importers, wholesalers, retailers, transportation companies and manufacturers.

MATERIALS AND SUPPLIES

1. Are all materials and supplies available locally?
2. Is the local material market competitive?
3. Is satisfactory delivery of local materials assured at reasonable prices?
4. What materials and supplies must be imported?
5. Are they available in world markets at competitive prices?
6. Would prompt delivery of imported materials and supplies be assured so that large inventories would not be required?

MARKET FACTORS

1. Is there already a demand for the product?
   - A. Who are the principal consumers?
   - B. Who are possible new consumers?

2. How is demand for the product now satisfied?
   - A. By local production? If so, what is the volume of annual production?
   - B. What percentage of consumption is filled by local production?
   - C. By imports? If so, what is the volume of annual imports?
   - D. What percentage of consumption is met by imports?
   - E. From what areas are imports derived?

3. What is the estimated annual increase in local consumption over the next five years?
   - A. How were such estimates made?
   - B. By reference to official figures on population growth, family budgets, imports, etc.?
   - C. By consultation with trade or industry, ministries, associations, bankers, commercial houses, wholesalers, retailers, industrial consumers, etc.?

4. If the product is already being manufactured, can the existing and estimated future local market absorb production of the new plant without price-cutting or other dislocations?

5. Would the estimated sales price and quality of the new product make it competitive with an imported equivalent?
   A. After adjusting cost to local conditions, is the estimated sales price of the product so high that tariff protection is necessary to protect it from imports?

EXPORT MARKETS

1. Could the product compete in export markets on the basis of price, quality and dependability of supply?
2. Can export markets for the product be developed?
3. If so, in what areas and in what annual volume?
4. What procedures would be necessary to develop export markets?
5. What would it cost?

MARKETING PROBLEMS

1. In calculating costs of the product, has adequate allowance been made for the expense of a sales department, advertising and promotion that might be required?

2. Do consumer prejudices against locally manufactured products exist?
   A. If so, why?
   B. Would they apply to the new product?
   C. If so, how could they be overcome and what would it cost to do so?

3. Do marketing and distribution facilities for the product exist?
   A. If not, can they be set up?
   B. What would it cost to do so?

4. Will the product be sold to:
   A. Wholesalers?
   B. Retailers?
   C. Direct to consumer?
   D. Other industries?
   E. Government?

FINANCIAL FACTORS

1. Technical advice on selection of machinery and equipment.
   A. In selecting the machinery and equipment for the new plant, have reputable and competent engineers and technicians been consulted?
   B. Have they been asked for advice on the most suitable types of machinery and equipment for the process and locality?
   C. Have they carefully compared costs of various suppliers?
   D. Credit terms offered purchasers?

FINANCIAL REQUIREMENTS OF THE PROJECT

1. In estimating the cost of the project, has careful consideration been given to:
   A. The effect on costs of delays in construction schedules?
   B. In delivery and installation of machinery and equipment?
   C. In import of essential raw materials and supplies?

2. In calculating cash flow and working capital requirements, has careful consideration been given to:
   A. Maintaining adequate inventories of raw materials?
   B. Supplies and spare parts?
   C. Seasonal fluctuations in the business?
   D. The time required to liquidate credit sales to customers and bad debts?
   E. The period necessary to get the plant into production?
   F. Cash required to amortize its principle loans?

3. If the economy is in a period of inflation, has full allowance been made for the influence of rising prices and wages on the cost of the project and on working capital requirements?

SHORT TERM BANK CREDITS

1. Has it been possible to make arrangements with local banks to finance short-time working capital requirements of the business?

FINANCIAL PLAN

1. Has a definite plan to finance the project been worked out?
   A. Is sufficient capital available locally?
   B. If not, what is the plan to obtain the required capital?

ECONOMIC FACTORS

1. How much foreign exchange (and in what currency) is required to import machinery, equipment and supplies:
   - A. How much foreign exchange (and in what currency) is required for annual interest payments and amortization of any loans contracted to import machinery and equipment, or for payment of royalties and technical services?
   - B. How much foreign exchange (and in what currency) is required for annual import of raw materials and supplies?
   - C. What are estimated annual foreign exchange earnings and in what currencies?
   - D. Has careful consideration been given to the possibility of depreciation in the foreign exchange value of the local currency?
   - E. Has careful consideration been given to the possibility of import controls, or restrictions on availabilities of foreign exchange necessary to operate the business?
   - F. What benefits would the new business bring to the economy in the use of local raw materials: in employment and in technology?
   - G. Do dependable facilities exist for transportation, power, fuel, water and sewage?
     - (1) If not, can existing deficiencies be eliminated satisfactorily?
     - (2) What would be the cost to do so?

PERSONNEL

1. Is there an adequate labor supply near the plant location?
   - A. If not, how can the problem be solved?

2. Can the problem of training competent management and supervisory personnel be solved?
   - A. Also, the training of skilled labor?
   - B. Is technical advice available in the locality?
   - C. If not, where can it be obtained and what will it cost?

LAWS AND REGULATIONS

1. Do existing labor laws, government regulations, laws and taxes favor establishment of new business?
   - A. If not, can existing obstacles be removed?
   - B. If so, how and when?

BIBLIOGRAPHY

Mechanical Engineers' Handbook, 5th Edition, Lionel S. Marks, McGraw-Hill Book Company, Inc., 330 West 42nd Street, New York 36, N. Y.

Stainless Steel Handbook, 1956, Allegheny Ludlum Steel Corporation, Pittsburgh 22, Pa.

Materials in Design Engineering (Magazine) Reinhold Publishing Corporation, 430 Park Avenue, New York 22, N. Y.

Machine Tools, 1957, H. D. Hall and H. E. Linsley, The Industrial Press, 93 Worth Street, New York 13, N. Y.

Practical Metallurgy, 1941, G. Sachs and K. R. Van Horn, American Society for Metals, 7301 Euclid Avenue, Cleveland, Ohio.

Metals Handbook, 1948 Edition - Metals Handbook Supplement, 1955 American Society for Metals, Cleveland, Ohio.

Tool Engineers Handbook, 1949, American Society of Tool and Manufacturing Engineers, 10700 Puritan Avenue, Detroit 38, Michigan.

TECHNICAL AND TRADE ASSOCIATIONS

United States National Bureau of Standards, Engineering Mechanics Section, Washington 25, D. C.

American Iron and Steel Institute, 150 East 42nd Street, New York, N. Y.

American Society for Metals, 7301 Euclid Avenue, Cleveland 3, Ohio.

American Society of Tool and Manufacturing Engineers, 10700 Puritan Avenue, Detroit 38, Michigan.