1592

# PLANT REQUIREMENTS FOR MANUFACTURE OF BUCKETS, PAILS AND PANS

A.I.D.
Reference Center
Room 1656 NS

TECHNICAL AIDS BRANCH

INTERNATIONAL COOPERATION ADMINISTRATION

Washington, D. C.

REVISED
MAY 1959

# FOREWORD

This manual is a revision of an earlier report of the same type issued in 1955. This revised version includes current costs of labor, machinery, equipment and supplies, as well as additional information relative to engineering, training, safety, markets, sales, financial and economic factors.

* * * * * * * *

This manual is designed to provide a general picture of the factors which must be considered in establishing and operating a small-scale factory of this type. It should prove useful in creating interest in the subject, and serve to give enough understanding of the related considerations to help government officials, other leaders and businessmen to determine whether the potential deserves more-detailed attention.

However, it is important to note that in most cases plans for the actual development and installation of a plant will require expert engineering and financial advice in order to meet specific local situations. For further information and assistance, readers should contact their local Productivity Center, Industrial Institute, Servicio, or United States Operations Mission.

Mention of the name of any firm, product, or process in this manual is not to be considered a recommendation or endorsement by the International Cooperation Administration, but merely a citation that is typical in its field.

* * * * * * * *

The original report was prepared by the Methods Engineering Council, Pittsburgh, Pennsylvania.

Technical information, as well as review, was provided by R. Poliakoff, Industrial Consultant, 126 Eleventh Avenue, New York 11, New York.

* * * * * * * *

This manual has been revised and rewritten by
George H. Andrews Engineering Associates, Inc.
411 Southern Building, Washington 5, D. C.

PR-7

April 1959

## TABLE OF CONTENTS


| | Page |
|---|---|
| Introduction | 1 |
| General Assumptions | 1 |
| Product Specifications | 2 |
| Manufacturing Operations | 3 |
| Fabrication | 3 |
| Assembly | 3 |
| Plating | 4 |
| Manufacturing unit | 6 |
| Direct Material Requirements | 6 |
| Cost of Direct Materials | 6 |
| Production Tools and Equipment | 7 |
| Other Tools and Equipment | 7 |
| Furniture and Fixtures | 8 |
| Direct Labor | 8 |
| Indirect Labor | 8 |
| Plant Layout | 9 |
| Plant Site | 9 |
| Building | 9 |
| Power | 9 |
| Water | 9 |
| Fuel | 9 |

| | Page |
|---|---|
| Truck | 9 |
| Supplies | 10 |
| Depreciation | 10 |
| Manufacturing Overhead | 10 |
| Fixed Assets | 11 |
| Working Capital | 11 |
| Capital Requirements | 11 |
| Sales Revenue | 12 |
| Recapitulation of Costs, Sales and Profit | 12 |
| Budget Control | 13 |
| Budget Control Accounts | 13 |
| Requisition Form | 14 |
| Voucher Check | 15 |
| Engineers | 16 |
| Training | 17 |
| Safety | 18 |
| Summary | 19 |
| Materials and Supplies | 19 |
| Market Factors | 19 |
| Export Markets | 20 |
| Market Problems | 20 |
| Economic Factors | 21 |

| | Page |
|---|---|
| Personnel | 21 |
| Laws and Regulations | 21 |
| Financial Factors | 22 |
| Financial Requirements of the Project | 22 |
| Short Term Credits | 22 |
| Financial Plan | 22 |
| Bibliography | 23 |
| Abbreviations | 23 |
| Details of Bucket Design | 24 |
| Drinking Cup | 25 |
| Cake Pan | 26 |
| Pie Pan | 26 |
| Foot Shear | 27 |
| Geared Punch Press | 27 |
| Power Roll Forming Machine | 28 |
| Bead and Flanging Machine | 28 |
| Riveting Machine | 28 |
| Galvanizing Kettle | 29 |
| Drossing Spoon | 30 |
| Flux Skimmer | 30 |
| Tin Pot | 31 |
| Plant Layout | 32 |

# PLANT REQUIREMENTS FOR MANUFACTURE OF BUCKETS, PAILS AND PANS

## INTRODUCTION

Galvanizing is a process by which iron or steel is coated with zinc to render it rust-resistant. There are three general methods for accomplishing this. They are, 1) the hot - dip method; 2) the electro-galvanizaing method; and 3) the "Sherardizing" method.

This manual describes the hot-dip method because it is the most widely used and because of its economic advantages over the other methods.

The tinplating process is accomplished by the same basic method.

The galvanizing process is used in the manufacture of buckets, pails, wash tubs, water tanks and many industrial products. It cannot be used in any product which comes in contact with food, however, because the zinc will contaminate the food.

Tinplated products, on the other hand, are used extensively for food containers. There is very little tinplating done by the hot-dip method in the United States due to the high cost of tin. In fact, many manufacturers are using aluminum, stainless steel, and copper for cooking utensils instead of tinplate. In other parts of the world, however, tin would probably be cheaper than other applicable materials.

All tables of costs included in this report include a column headed "Actual" in which the local costs of the items may be entered.

## GENERAL ASSUMPTIONS

In order to make realistic estimates, certain assumptions must be made. These are:

1. The costs of building, equipment, and material necessary are based on United States prices.

2. Labor costs used are the average for the industry and skill described, based on recently published figures of the United States Bureau of Labor Statistics.

3. All other costs, statistics, and figures are based on current United States prices.

4. Adequate heat, light, water, and electricity are available at the plant site.

5. Adequate transportation facilities are available at the plant site.

6. The plant operates one eight-hour shift per day, five days per week and fifty weeks per year.

7. No special provision is made for training of personnel. It is assumed that persons learning their jobs will be paid learners' rates.

8. The following items cannot be estimated realistically:

   a. Land value
   b. Distribution and selling costs
   c. In-freight and out-freight
   d. Taxes

   While general estimates will be made of each of these items, for the purpose of competing cost estimates, adjustment should be made in accordance with actual local costs.

   In fact, all cost estimates contained in this report should be adjusted to conform to local conditions.

## PRODUCT SPECIFICATIONS

The following is a list of products covered by the manual. This list is not to be considered as the limit of the facilities described herein. It merely lists a few of the items that are in general demand. Local markets will determine the demand for other items.

| Product | Size | Type of Coating | Pieces Per Day | Pieces Per Year | Actual |
|---|---|---|---|---|---|
| Bucket | 12 qt. | Galvanized | 250 | 62,500 | _____ |
| Bucket | 14 qt. | Galvanized | 150 | 37,500 | _____ |
| Bucket | 16 qt. | Galvanized | 100 | 25,000 | _____ |
| Bucket | 14 qt. | Tinplated | 200 | 50,000 | _____ |
| Drinking Cup | 1 pt. | Tinplated | 500 | 125,000 | _____ |
| Cake Pan | 10 in. | Tinplated | 150 | 37,500 | _____ |
| Pie Pan | 9 in. | Tinplated | 50 | 12,500 | _____ |
| Total | | | 1400 | 350,000 | _____ |

Drawings of these items are shown in figures 1, 2, 3, and 4. Other tinplated products that could be added to the list include wash basins, foot graters, sifters, cookie sheets, and cupcake pans.

## MANUFACTURING OPERATIONS

The following table is a condensation of the manufacturing operations involved in the making of the items listed on page 2.

Major Manufacturing Operations

| Product | Shear | Blank | Form | Roll | Galivanize | Tinplate |
|---|---|---|---|---|---|---|
| Buckets | x | x | x | x | x | x |
| Drinking Cups | x | x | | x | | x |
| Cake Pans | x | x | x | | | x |
| Pie Pans | x | x | x | | | x |

## FABRICATION

The steel for the products of this plant is supplied in sheets generally 50" square. These are cut by a shear (figure 5) into strips of the size required by each product. This operation does not require a skilled operator.

The strips are then inserted into a blanking and cutting die in a punch press (figure 6) and are cut to the required shape. The operator of this machine need not be highly skilled, but a fair degree of manual dexterity is desirable if a reasonable production rate is to be maintained.

These pieces are then formed to the desired shape using a forming die in the same type of press as is used in blanking. This forming includes drawing the disk in the pie and cake pans and forming the stiffening ribs in the bottoms of the buckets, and the flanges on the cup bottoms, the bucket handle brackets, and the cup handles.

The sides of the buckets and the cup bodies are rolled to shape on the former rolls (figure 7). Since the diameter of these products varies, it is necessary to reset the rolls for each size manufactured. Therefore, the operator of this machine should possess a fair amount of skill in order to make these changes accurately and quickly.

The wire bucket handles are formed using the wire former. This is a comparatively simple operation. The operator, therefore, requires low average to average skill.

The flange on the pie and cake pan is formed on the beading and flanging machine (figure 8). Once the article is placed in the machine, the operation is completely automatic; therefore, a skilled workman is not required.

## ASSEMBLY

The buckets are assembled from 6 pieces; 2 sides, a bottom, 2 handle brackets and a wire handle.

The sides are assembled using the side seamer. This operation is similar to the beading and flanging operation and does not require a highly skilled operator. The cup body is also seamed on this machine.

The bottoms of the buckets and cups are assembled on the bottom seamer. This machine does not require a highly skilled operator either. The handle for the cup is rolled in with this bottom seamer.

The bead on the top of the buckets and the cups is rolled next using the beading and flanging machine. The top end of the handle for the cup is rolled in with this bead. The fabrication of the cups is complete with this operation.

The handle brackets for the buckets are riveted to the body using a riveting machine (figure 9). This operation is also semi-automatic and requires an operator of only average skill.

The final operation is assembling the wire handle to the bucket. This is a completely manual operation, but still does not require a great amount of skill.

## PLATING

The general processes involved in the plating operations are as follows:

1. Degrease
2. Pickle
3. Rinse
4. Zinc chloride dip
5. Zinc or tin dip

### Degrease

The products are generally spotted with grease and dirt after fabricating and they must be dipped in a solution to remove them thereby insuring a good zinc or tin coating. This degreasing solution is maintained at a temperature of from 190° - 200°F. and is composed of the following materials:

| | |
|---|---|
| 125 pounds | - 58% soda ash |
| 1.16 pounds | - Sodium silicate, 40° Baume |
| 250 gallons | - Water |

### Pickle

After degreasing, the products are dipped in a sulphuric acid solution to remove rust and pits. This solution is also hot and is most effective at a temperature of 175°F. The sulphuric acid is in a 10% solution with water. The time of immersion varies with the condition of the article, but is generally 10 to 15 minutes.

The tanks containing both of these solutions are generally steel with wood linings.

## Rinse

Immediately upon removing the article from the pickling tank it should be immersed in water and left there until it is ready to be plated. This serves the purpose of washing off the acids and preventing any further serious rusting.

## Zinc Chloride Dip

Most manufacturers prefer to dip the article in a solution of zinc chloride before plating. This operation is of only a few seconds duration and aids the plating process. It also prevents rusting. Even if the article is left to dry for 8 or 10 hours, it may still de dipped directly into the zinc or tin.

## Fluxing and Galvanizing

This is the most important part of the plating process. It must be done with great skill and be supervised by a person who has an intimate knowledge of galvanizing and/or tinplating. The temperature of the plating tanks or kettles (figure 10) must be very closely controlled. The best operating temperature for the galvanizing kettle is between 800° - 840°F. and should at no time be allowed to exceed 840°F. The life of the pot depends a great deal on this temperature control. A pyrometer recording and controlling instrument will prove very advantageous in this control.

The galvanizing kettle is built with a dam at the exit position to keep the flux from coating the article as it is being withdrawn. This flux is formed by depositing on the surface of the molten zinc a few handfuls of sal ammoniac. In addition a few drops of glycerin are deposited to make it froth up. The thickness of the flux layer should be about 1" - 1-1/2". The article should be dipped into the kettle in such a position so as to facilitate draining when it is withdrawn. The article is withdrawn with a steady pull after the flux has been scraped aside using the flux skimmer (figure 11). It should be allowed to drain for a few seconds before being laid aside. Shaking or spinning will speed this process. Fans may be used to speed the drying of the coating.

There will be an accumulation of "dross" in the galvanizing pot consisting of a compound of iron and zinc formed during the process. This dross will sink to the bottom of the kettle and must be removed at least once a week using the drossing spoon (figure 12). Care should be taken during this removal so as not to stir the dross into the zinc bath.

The tin plating process is basically the same as galvanizing except that palm oil is used in the exit end of the pot to give the product a bright finish. The tin pot (figure 13) operates at a temperature of approximately 500°F.

After they have cooled, the articles should be packed in a manner that will prevent scratching the plated surface.

## MANUFACTURING UNIT

The volume of work produced in this type of industry is generally expressed in pounds or tons of work produced.

### ANNUAL DIRECT MATERIALS REQUIREMENTS

| Product | Size | Pieces Per Year | Pounds Each | | | Pounds Per Year | | | Actual Cost |
|---|---|---|---|---|---|---|---|---|---|
| | | | Steel | Zinc | Tin | Steel | Zinc | Tin | |
| Steel - wire | 16 ga. | | | | | 5,875 | 1,250 | 850 | _____ |
| Bucket | 12 qt. | 62,500 | 1.42 | .63 | | 88,750 | 39,375 | | _____ |
| Bucket | 14 qt. | 37,500 | 1.54 | .63 | | 57,750 | 23,625 | | _____ |
| Bucket | 16 qt. | 25,000 | 1.58 | .63 | | 39,500 | 15,750 | | _____ |
| Bucket | 14 qt. | 50,000 | 1.54 | | .400 | 77,000 | | 20,000 | _____ |
| Drinking Cup | 1 pt. | 125,000 | .20 | | .033 | 25,000 | | 4,125 | _____ |
| Cake Pan | 10" | 37,500 | .63 | | .104 | 23,625 | | 3,900 | _____ |
| Pie Pan | 9" | 12,500 | .52 | | .090 | 6,500 | _____ | 1,125 | _____ |
| Total | | 350,000 | | | | 324,000 | 80,000 | 30,000 | _____ |

### ANNUAL COST OF DIRECT MATERIALS

| Description | Pounds Per Year | Price Per Pound | Estimated Cost | Actual Cost |
|---|---|---|---|---|
| Steel - wire 16 gauge | 5,875 | $.10 | $ 588 | _____ |
| Steel - cold rolled sheet | 318,125 | .073 | 23,223 | _____ |
| Zinc - prime western | 80,000 | .11 | 8,800 | _____ |
| Tin | 30,000 | .92 | 27,600 | _____ |
| Chemicals such as: Sulfuric acid, Ammonium chloride, Soda ash, Sodium silicate, Zinc chloride, Caustic soda, Glycerin, Palm oil | | | 1,562 | _____ |
| Total | | | $61,773 | _____ |

The prices listed include cost of freight and allowances for waste.

## PRODUCTION TOOLS AND EQUIPMENT

| Description | Number Required | Estimated Unit Cost | Estimated Total Cost | Actual Cost |
|---|---|---|---|---|
| **Fabricating** | | | | |
| Shear - 50" wide | 1 | $ 800 | $ 800 | |
| Press - 45 ton single geared | 2 | 4,500 | 9,000 | |
| Former rolls | 1 | 200 | 200 | |
| Beading and flanging machine | 1 | 2,400 | 2,400 | |
| Side seamer | 1 | 4,500 | 4,500 | |
| Bottom seamer | 1 | 12,000 | 12,000 | |
| Riveting machine | 1 | 400 | 400 | |
| Wire former | 1 | 200 | 200 | |
| Dies | 10 | | 16,400 | |
| **Plating** | | | | |
| Galvanizing kettle | 1 | 3,000 | 3,000 | |
| Tinning pot | 1 | 2,500 | 2,500 | |
| Tanks - for pickling and rinsing | 3 | 600 | 1,800 | |
| Total | | | $ 53,200 | |

## OTHER TOOLS AND EQUIPMENT

| Description | Number Required | Estimated Unit Cost | Estimated Total Cost | Actual Cost |
|---|---|---|---|---|
| **Fabricating** | | | | |
| Hand tools | | | $ 250 | |
| Lathe | 1 | $ 950 | 950 | |
| Drill press | 1 | 400 | 400 | |
| Tote boxes | 25 | 4 | 100 | |
| Stools | 5 | 8 | 40 | |
| Pallets | 25 | 2 | 50 | |
| **Plating** | | | | |
| Hoods and monitors | 2 | 250 | 500 | |
| Fans - 18" | 2 | 75 | 150 | |
| Chemical storage bins | 10 | 6 | 60 | |
| Total | | | $ 2,500 | |

## FURNITURE AND FIXTURES

| Description | Number Required | Estimated Unit Cost | Estimated Total Cost | Actual Cost |
|---|---|---|---|---|
| Office | | | | |
| Adding Machine | 1 | $ 150 | $ 150 | _____ |
| Typewriters | 2 | 150 | 300 | _____ |
| Desks and Chairs | 5 | 100 | 500 | _____ |
| Filing Cabinets | 5 | 50 | 250 | _____ |
| Total | 13 | | $1,200 | |
| Pick-up Truck | | | $2,500 | _____ |

## DIRECT LABOR

| Department | Number Required | Hourly Rate | Estimated Annual Cost | Actual Cost |
|---|---|---|---|---|
| Fabricating | 7 | $ 1.70 | $ 23,800 | _____ |
| Galvanizing | 2 | 1.80 | 7,200 | _____ |
| Tinplating | 4 | 1.80 | 14,400 | _____ |
| Materials Handling | 1 | 1.60 | 3,200 | _____ |
| Total | 14 | | $ 48,600 | _____ |

## INDIRECT LABOR

| Department | Number Required | Hourly Rate | Estimated Annual Cost | Actual Cost |
|---|---|---|---|---|
| Manager | 1 | | $ 10,000 | _____ |
| Chemist - Foreman | 1 | | 8,000 | _____ |
| Bookkeeper | 1 | | 5,000 | _____ |
| Secretary-Clerk | 1 | | 4,000 | _____ |
| Maintenance | 1 | $ 2.00 | 4,000 | _____ |
| Truck Driver | 1 | 1.50 | 3,000 | _____ |
| Total | 6 | | $ 34,000 | _____ |

## PLANT LAYOUT

Figure 14 shows the arrangement of the departments and equipment for the plant and production being discussed.

## PLANT SITE

To provide for eventual expansion the plant site should include at least 10,000 square feet. It should be located where there is adequate transportaion and power and as close to market sources as possible. The cost of the site is estimated at $1,000.

## BUILDING

A one story building of simple construction is satisfactory. It should provide about 3,600 square feet of floor space and should be preferably 60 feet by 60 feet in dimensions. The cost of the building is estimated at $3.50 per square foot or approximately $12,600.

## POWER

It is assumed that a dependable supply of electric power is available from public or private power service lines. The total maximum connected load will not exceed 60 horsepower. The annual cost of power for all purposes is estimated at $1,800.

## WATER

An adequate supply of good water is important for the operations of galvanizing and tinning, for normal sanitary uses and for fire protection. It is estimated that the annual cost of water will amount to approximately $500.

## FUEL

Any local fuel can be used. The cost of fuel for production, heating and sanitary purposes should not exceed $900.

## TRUCK

A one-ton pick-up and delivery truck is included as a special item following furniture and fixtures. The cost of the driver is included in the indirect labor and the cost of gas, oil and maintenance, amounting to $500 per year plus depreciation, is included in the supplies.

## SUPPLIES

| Item | Estimated Cost | Actual Cost |
|---|---|---|
| Office Supplies | $ 300 | |
| Truck gas, oil and repairs | 500 | |
| Grease, oil, belting | 300 | |
| Maintenance supplies and tools | 900 | |
| Packing Materials | 5,000 | |
| Total | $ 7,000 | |

## DEPRECIATION

| Item | Estimated Cost | Years Life | Estimated Per Year | Actual Per Year |
|---|---|---|---|---|
| Building | $12,600 | 20 | $ 630 | |
| Production Tools and Equipment | 53,200 | 10 | 5,320 | |
| Other Tools and Equipment | 2,500 | 10 | 250 | |
| Furniture and Fixtures | 1,200 | 10 | 120 | |
| Pick-up Truck | 2,500 | 4 | 625 | |
| Total | | | $ 6,945 | |

## MANUFACTURING OVERHEAD

| Item | Estimated Cost | Actual Cost |
|---|---|---|
| Depreciation | $ 6,945 | |
| Indirect Labor | 34,000 | |
| Power | 1,800 | |
| Water | 500 | |
| Fuel | 900 | |
| Supplies | 7,000 | |
| Total | $51,145 | |

## FIXED ASSETS

| Item | Estimated Cost | Actual Cost |
|---|---|---|
| Land | $ 1,000 | _____ |
| Building | 12,600 | _____ |
| Production Tools and Equipment | 53,200 | _____ |
| Other Tools and Equipment | 2,500 | _____ |
| Furniture and Fixtures | 1,200 | _____ |
| Pick-up Truck | 2,500 | _____ |
| Total | $ 73,000 | _____ |

## WORKING CAPITAL

| Item | | Estimated Cost | Actual Cost |
|---|---|---|---|
| Direct Materials | - 60 days | $ 10,300 | _____ |
| Direct Labor | - 30 days | 4,050 | _____ |
| Manufacturing Overhead | - 30 days | 4,250 | _____ |
| Reserve for Sales Collections | - 30 days | 20,800 | _____ |
| Total | | $ 39,400 | _____ |

## CAPITAL REQUIREMENTS

| Item | Estimated Cost | Actual Cost |
|---|---|---|
| Fixed Assets | $ 73,000 | _____ |
| Working Capital | 39,400 | _____ |
| Total | $ 112,400 | _____ |

## SALES REVENUE

The method of marketing these products will depend upon the existing practices in the Country where the plant is located. For the purpose of this manual, the sale of all products to wholesalers, who in turn sell to retailers, will be considered as the marketing method.

The estimated selling prices to wholesalers of all items produced in this plant are below together with the annual production volume and annual gross sales.

| Product | Size | Annual Production | Price Each | Estimated Sales | Actual Sales |
|---|---|---|---|---|---|
| Galvanized Bucket | 12 qt. | 62,500 | $ 1.00 | $ 62,500 | _____ |
| Galvanized Bucket | 14 qt. | 37,500 | 1.10 | 41,250 | _____ |
| Galvanized Bucket | 16 qt. | 25,000 | 1.30 | 32,500 | _____ |
| Tin Bucket | 14 qt. | 50,000 | 1.425 | 71,250 | _____ |
| Drinking Cups | 1 pt. | 125,000 | .15 | 18,750 | _____ |
| Cake Pans | 10" | 37,500 | .50 | 18,750 | _____ |
| Pie Pans | 9" | 12,500 | .40 | 5,000 | _____ |
| Total | | | | $ 250,000 | _____ |

## RECAPITULATION OF COSTS, SALES AND PROFITS

| Item | Estimated Cost | | Actual Cost |
|---|---|---|---|
| Direct Materials | $ 61,773 | | _____ |
| Direct Labor | 48,600 | | _____ |
| Manufacturing Overhead | 51,145 | | _____ |
| Total Manufacturing Cost | | $ 161,518 | _____ |
| Interest on Loans | $ 3,000 | | _____ |
| Insurance | 1,000 | | _____ |
| Legal | 1,500 | | _____ |
| Auditing | 2,500 | | _____ |
| Unforeseen Expense | 11,482 | | _____ |
| Total Administrative Cost | | 19,482 | _____ |
| Cost of Sales including: Commissions, Travel Freight Out, Discounts, Allowances and Bad Debts | | 29,000 | _____ |
| Profit before Taxes | | 40,000 | _____ |
| Total Annual Gross Sales | | $ 250,000 | _____ |

## BUDGET CONTROL

A requisition form designed to provide accurate records of procurement and indicate the purpose of procurement with the least amount of time and effort is shown on the following page.

This form has an account number for each type of the various expenditures which the manager will review in detail, monthly or oftener, in order to control his expenses. Some items, such as power and water, are usually under contract and are easily checked by reference to monthly bills. For simplification, items (marked with an asterisk below) are omitted from the purchase requisition. Variations in the labor costs are easily reviewed by examination of the payroll vouchers. The simplified type of control thus provided makes certain that the manager can control expenditures promptly.

Following the requisition form, a sample voucher check is shown. Voucher checks should be used for the payment of all expenditures and the appropriate book account number placed on each voucher.

At the end of each month the manager will receive a statement of all expenditures broken down by budget accounts. If the expenditures exceed the budgeted monthly allowances of any of the accounts, the bookkeeper will furnish the manager with a break-down of all expenditures relative to the budgeted accounts exceeded. All these supporting data can be secured by reference to the purchase requisitions and the check vouchers. This reference will enable the manager to determine what caused the over-expenditure and take corrective action.

If at any time during each month it becomes apparent that expenditures will exceed any of the budget accounts, the bookkeeper will bring this to the attention of the manager for his information and action.

### BUDGET CONTROL ACCOUNTS

| Account Number | | Monthly Expense | Monthly Budget | Annual Budget | Actual |
|---|---|---|---|---|---|
| 10 | Administrative | $_____ | $ 666 | $ 8,000 | $_____ |
| 20 | Sales | _____ | 2,416 | 29,000 | _____ |
| 30 | Direct Materials | _____ | 5,147 | 61,773 | _____ |
| 40 | Supplies | _____ | 583 | 7,000 | _____ |
| 51 | Power* | _____ | 150 | 1,800 | _____ |
| 52 | Water* | _____ | 41 | 500 | _____ |
| 53 | Fuel | _____ | 75 | 900 | _____ |
| 60 | Unforeseen Expense (Reserve Account) | _____ | 956 | 11,482 | _____ |
| 71 | Direct Labor* | _____ | 4,050 | 48,600 | _____ |
| 72 | Indirect Labor* | _____ | 2,833 | 34,000 | _____ |
| 80 | Depreciation (Reserve Account) | _____ | --- | 6,945 | _____ |

Note: Administrative includes interest on loans, insurance, legal and auditing.

| PURCHASE REQUISITION | COMPANY NAME | DATE |
|---|---|---|

☐ 10 ADMINISTRATION ☐ 40 SUPPLIES

☐ 20 SALES ☐ 50 UTILITIES

☐ 30 MATERIALS ☐ 60 UNFORESEEN EXPENSE

INDICATE BELOW THE USE OF MATERIALS

☐ DIRECT MATERIALS ☐ MAINTENANCE SERVICES

☐ MAINTENANCE MATERIALS ☐ OPERATING SUPPLIES

| | PLEASE ORDER THESE MATERIALS OR SERVICES | DELIVERY WANTED | |
|---|---|---|---|
| QUANTITY | DESCRIPTION | UNIT | TOTAL |
| | | | |
| | | | |
| | | | |
| | | | |
| | | | |
| | | | |
| | | | |
| | | | |
| | | | |
| | | | |
| | | | |
| | | | |
| | | | |
| | | | |

| | | | |
|---|---|---|---|
| QUOTES FROM | | REQUISITIONED BY | |
| QUOTES FROM | | APPROVED BY | |
| QUOTES FROM | | ORDER NO. | ORDER DATE |

R. W. MITCHELL MANUFACTURING COMPANY
1422 BOSWORTH STREET, S. E.

65-22
514

ANYWHERE, U. S. A._____ 19____ No. 10000

PAY _____ DOLLARS $ _____
TO THE ORDER OF

R. W. MITCHELL MANUFACTURING COMPANY

TO FIRST NATIONAL BANK
ANYWHERE, U. S. A.

BY SAMPLE CHECK
VICE PRESIDENT

ACCOUNT NUMBER

Sample voucher check to be used for the payment of all expenditures in connection with Budget Control.

R. W. MITCHELL MANUFACTURING COMPANY

## ENGINEERS

The services of professional engineers are desirable in the design of this plant, even though the proposed plant is small.

A correct design is one which provides the greatest economy in the investment of funds and establishes the basis of operation that will be most profitable in the beginning and will also be capable of expansion without expensive alteration.

The addresses of professional engineers who specialize in industrial design, some of whom may be willing to undertake such work on low cost projects overseas, can be secured by reference to the published cards in various engineering magazines. They may also be reached through their national organizations, one of which is the

National Society of Professional Engineers
2029 K Street, Northwest,
Washington 6, D. C.

Manufacturers of industrial equipment employ engineers familiar with the design and installation of their specialized products. These manufacturers are usually willing to give prospective customers the benefit of technical advice by those engineers in determining the suitability of their equipment in any proposed project.

The equipment manufacturers also know, and can recommend, professional engineers in private practice, who are willing and able to provide appropriate consulting services.

## TRAINING

Manufacturing an inferior quality of product during the training period could create sales resistance that might be difficult to cope with later. To avoid such possibilities, the quality of the product should be maintained at all times, including the training period.

In some areas skilled operators may be available locally. In other areas all the operators may have to be trained.

If skilled operators are not available, adequate training would be assured by using one or more of the following methods:

A. If the plant is designed and installed by a competent engineering firm, the contract should be negotiated, if possible, on a turn-key basis. On this basis the contractor agrees to operate the plant and produce the quality and quantity of the product stated in the contract for an agreed period of time. Such a contract would assure adequate personnel training, since full quantity and quality could not be produced with an untrained organization.

B. The engineering firm that designs and installs the plant can usually make training arrangements to have key personnel placed, for training purposes, in a foreign industry that produces the same type of product. This would provide training for the key personnel while the plant is being installed.

C. If neither of the above methods is possible, then qualified and experienced individuals should be employed for the key positions, either permanently or temporarily, to perform the key operations and assist in training the organization, even if they must be secured outside the country.

D. The manager should have years of successful experience in this type of business and be fully qualified in all phases of management, including the training of employees.

## SAFETY

There is always danger of accident and injury in any industrial plant. Because of this, the manager should take specific action to bring to the attention of each employee the importance of safety precautions and intelligent first aid.

Practically all machines have safety appliances, and the manager should see that these are in good working condition and that the operators are making full use of them.

In addition to constant watchfulness to make sure that all practicable safety precautions are taken, first aid supplies should be readily available. One complete first aid kit should be maintained near the manager's office, and others at appropriate places throughout the plant. Some of the employees should be trained to provide first aid service.

The use of accident posters in the plant have proved to be of value in reducing accidents. It is recommended that such posters be used, and that some direct special action be taken by the manager, at least once each month, to bring to the attention of all personnel the importance of safety precautions.

A fire brigade should be established and each member trained as to his responsibility in case of fire. Fire drills should be conducted periodically.

It is recommended that the employees be encouraged to offer suggestions or recommendations relative to prevention of accidents, removal of fire hazards and maintaining general interest in all safety factors.

## SUMMARY

A small plant, built and operated according to the assumptions made in this manual would be a profitable undertaking.

There are some determinations, however, that should be made before a decision is reached to build and operate such a plant. Among the necessary determinations to be made are those with respect to the following items:

## MATERIALS AND SUPPLIES

1. Are all materials and supplies available locally?
2. Is the local material market competitive?
3. Are satisfactory delivery of local materials assured at reasonable prices?
4. What materials and supplies must be imported?
5. Are they available in world markets at competitive prices?
6. Would prompt delivery of imported materials and supplies be assured so that large inventories would not be required?

## MARKET FACTORS

1. Is there already a demand for the product?
   - A. Who are the principal consumers?
   - B. Who are possible new consumers?

2. How is demand for the product now satisfied?
   - A. By local production? If so, what is the volume of annual production?
   - B. What percentage of consumption is filled by local production?
   - C. By imports? If so, what is the volume of annual imports?
   - D. What percentage of consumption is met by imports?
   - E. From what areas are imports derived?

3. What is the estimated annual increase in local consumption over the next five years?
   - A. How were such estimates made?
   - B. By reference to official figures on population growth, family budgets, imports, etc.?
   - C. By consultation with trade or industry, ministries, associations, bankers, commercial houses, wholesalers, retailers, industrial consumers, etc.?

4. If the product is already being manufactured, can the existing and estimated future local market absorb production of the new plant without price-cutting or other dislocations?

5. Would the estimated sales price and quality of the new product make it competitive with an imported equivalent?
   A. After adjusting cost to local conditions, is the estimated sales price of the product so high that tariff protection is necessary to protect it from imports?

## EXPORT MARKETS

1. Could the product compete in export markets on the basis of price, quality and dependability of supply?
2. Can export markets for the product be developed?
3. If so, in what areas and in what annual volume?
4. What procedures would be necessary to develop export markets?
5. What would it cost?

## MARKETING PROBLEMS

1. In calculating costs of the product, has adequate allowance been made for the expense of a sales department, advertising and promotion that might be required?

2. Do consumer prejudices against locally manufactured products exist?
   A. If so, why?
   B. Would they apply to the new product?
   C. If so, how could they be overcome and what would it cost to do so?

3. Do marketing and distribution facilities for the product exist?
   A. If not, can they be set up?
   B. What would it cost to do so?

4. Will the product be sold to:
   A. Wholesalers?
   B. Retailers?
   C. Direct to consumer?
   D. Other industries?
   E. Government?

## ECONOMIC FACTORS

1. How much foreign exchange (and in what currency) is required to import machinery, equipment and supplies:
   A. How much foreign exchange (and in what currency) is required for annual interest payments and amortization of any loans contracted to import machinery and equipment, or for payment of royalties and technical services?
   B. How much foreign exchange (and in what currency) is required for annual import of raw materials and supplies?
   C. What are estimated annual foreign exchange earnings and in what currencies?
   D. Has careful consideration been given to the possibility of depreciation in the foreign exchange value of the local currency?
   E. Has careful consideration been given to the possibility of import controls, or restrictions on availabilities of foreign exchange necessary to operate the business?
   F. What benefits would the new business bring to the economy in the use of local raw materials: in employment and in technology?
   G. Do dependable facilities exist for transportation, power, fuel, water and sewage?
      (1) If not, can existing deficiencies be eliminated satisfactorily?
      (2) What would be the cost to do so?

## PERSONNEL

1. Is there an adequate labor supply near the plant location?
   A. If not, how can the problem be solved?

2. Can the problem of training competent management and supervisory personnel be solved?
   A. Also, the training of skilled labor?
   B. Is technical advice available in the locality?
   C. If not, where can it be obtained and what will it cost?

## LAWS AND REGULATIONS

1. Do existing labor laws, government regulations, laws and taxes favor establishment of new business?
   A. If not, can existing obstacles be removed?
   B. If so, how and when?

## FINANCIAL FACTORS

1. Technical advice on selection of machinery and equipment.
   A. In selecting the machinery and equipment for the new plant, have reputable and competent engineers and technicians been consulted?
   B. Have they been asked for advice on the most suitable types of machinery and equipment for the process and locality?
   C. Have they carefully compared costs of various suppliers?
   D. Credit terms offered purchasers?

## FINANCIAL REQUIREMENTS OF THE PROJECT

1. In estimating the cost of the project, has careful consideration been given to:
   A. The effect on costs of delays in construction schedules?
   B. In delivery and installation of machinery and equipment?
   C. In import of essential raw materials and supplies?

2. In calculating cash flow and working capital requirements, has careful consideration been given to:
   A. Maintaining adequate inventories of raw materials?
   B. Supplies and spare parts?
   C. Seasonal fluctuations in the business?
   D. The time required to liquidate credit sales to customers and bad debts?
   E. The period necessary to get the plant into production?
   F. Cash required to amortize its principle loans?

3. If the economy is in a period of inflation, has full allowance been made for the influence of rising prices and wages on the cost of the project and on working capital requirements?

## SHORT TERM BANK CREDITS

1. Has it been possible to make arrangements with local banks to finance short-time working capital requirements of the business?

## FINANCIAL PLAN

1. Has a definite plan to finance the project been worked out?
   A. Is sufficient capital available locally?
   B. If not, what is the plan to obtain the required capital?

## BIBLIOGRAPHY


### Textbooks

| | |
|---|---|
| Machine Shop Practice | McGraw-Hill Publishing Co., Inc.<br>330 West 42nd Street<br>New York 36, New York |
| Machinist Hand Book | McGraw-Hill Publishing Co., Inc.<br>330 West 42nd Street<br>New York 36, New York |

### Periodicals

| | |
|---|---|
| Mechanical Engineering | The Society of Mechanical Engineers<br>20th and Northampton Streets<br>Easton, Pennsylvania |
| American Machinist | McGraw-Hill Publishing Co., Inc.<br>330 West 42nd Street<br>New York 36, New York |


## ABBREVIATIONS

| | |
|---|---|
| ' | Foot or feet |
| " | Inch or inches |
| % | Percent |
| °F. | Degree Fahrenheit |
| lb. | Pound |
| lbs. | Pounds |
| ga. | Gauge |
| qt. | Quart |
| pt. | Pint |

| Capacity | Inches | | | |
|---|---|---|---|---|
| | A | B | C | D |
| 12 quart | 11 | 8 1/2 | 10 | 3/8 |
| 14 quart | 11 3/4 | 9 | 10 | 3/8 |
| 16 quart | 12 1/4 | 9 1/2 | 10 1/2 | 3/8 |

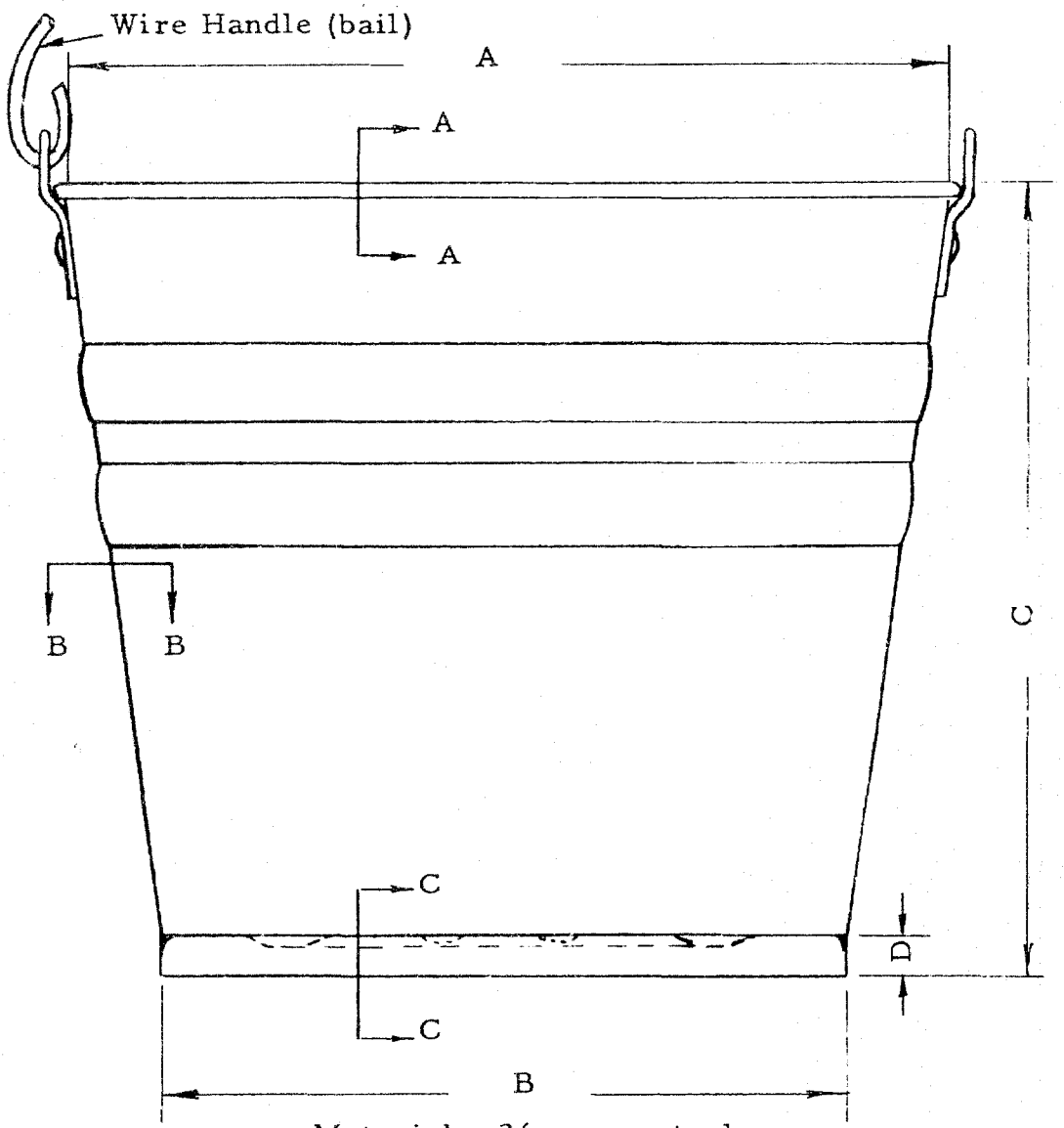


Material - 26 gauge steel

Wire Reinforcement
Section "A-A"

Both Sides
Section "B-B"

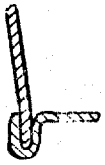

Section "C-C"

Figure 1 - Details of bucket design

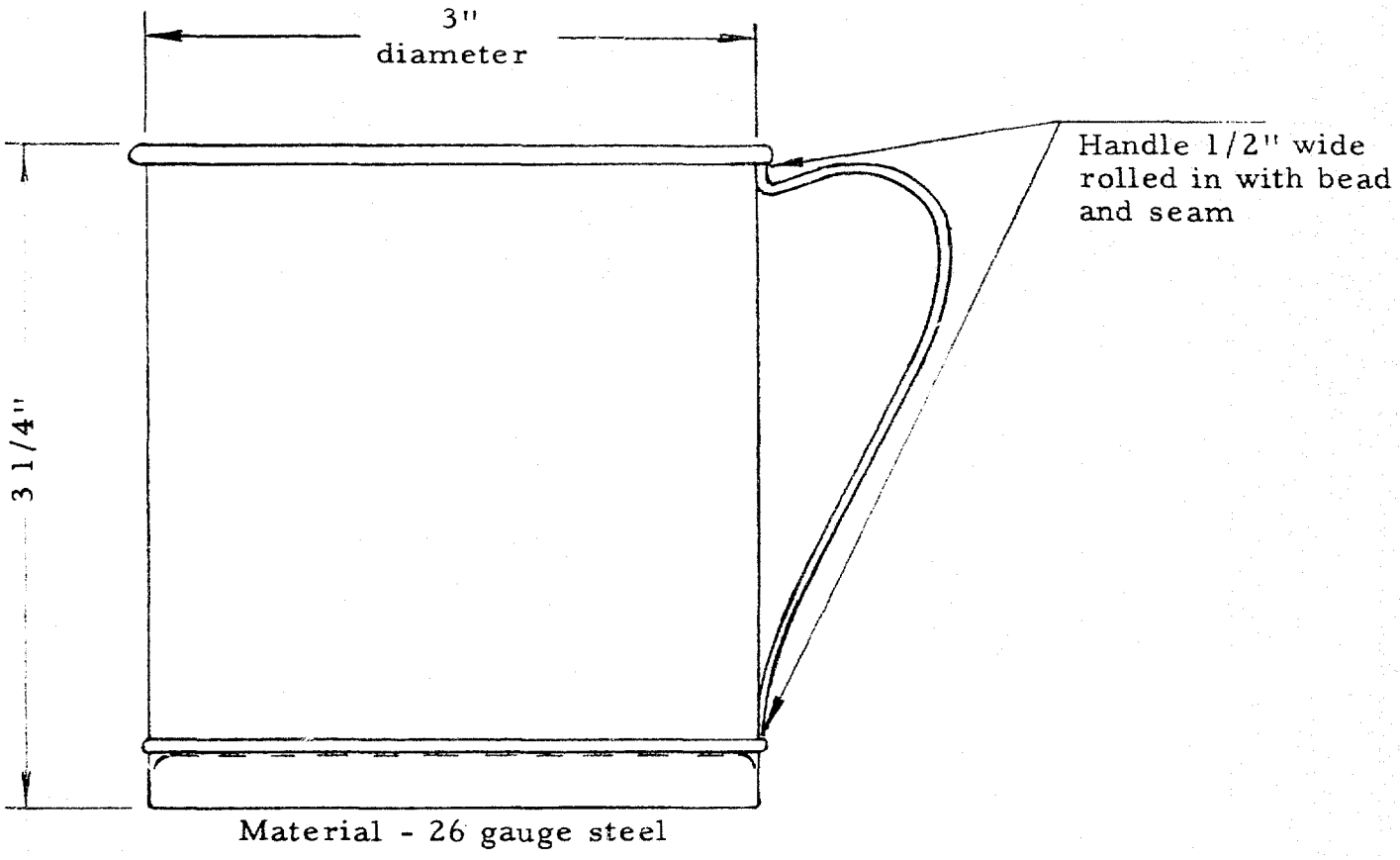


Figure 2 - Drinking cup - 1/2 pint capacity

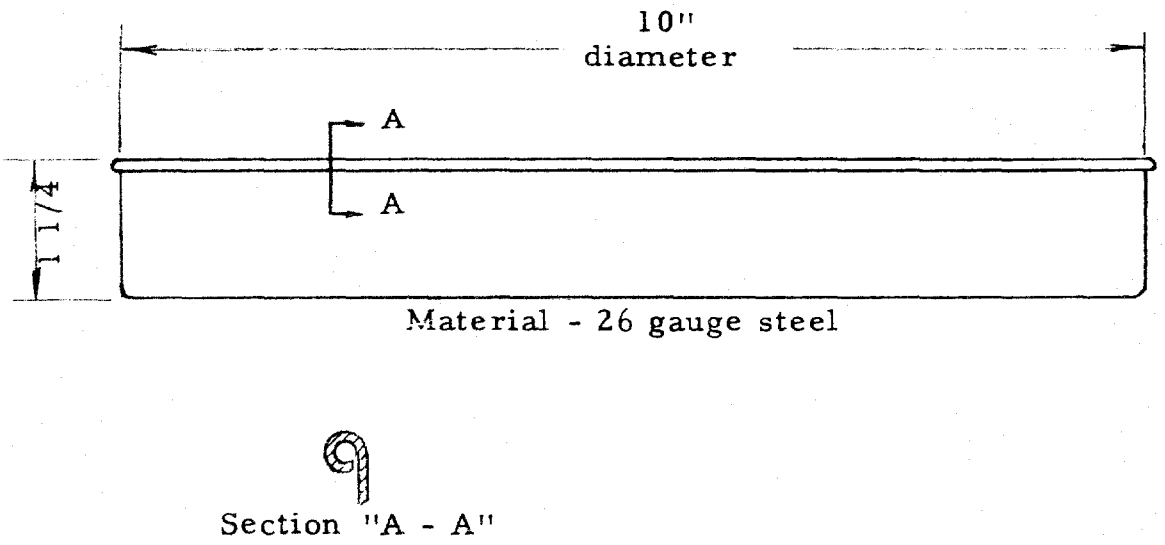


Figure 3 - Cake pan

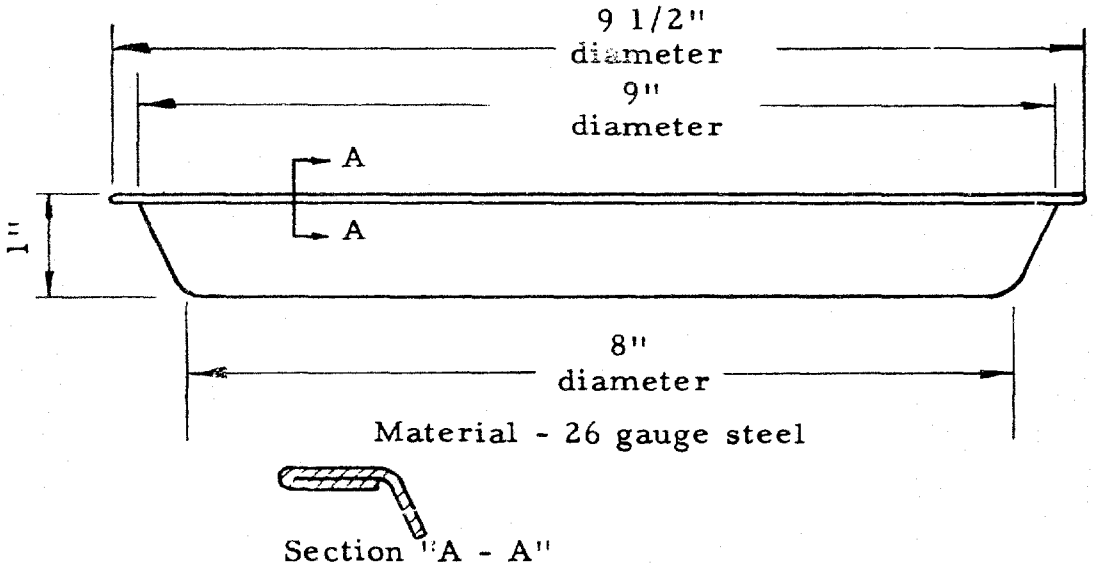


Figure 4 - Pie Pan

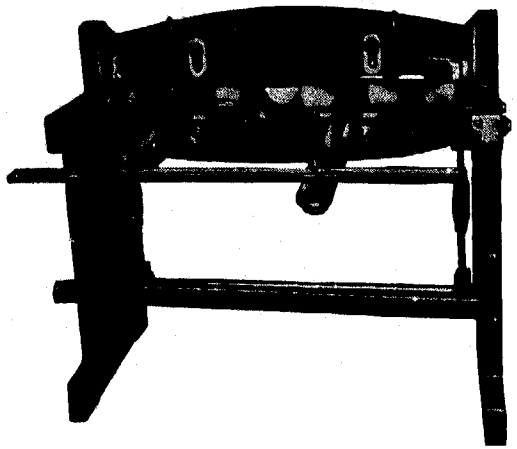

Figure 5 - Foot shear

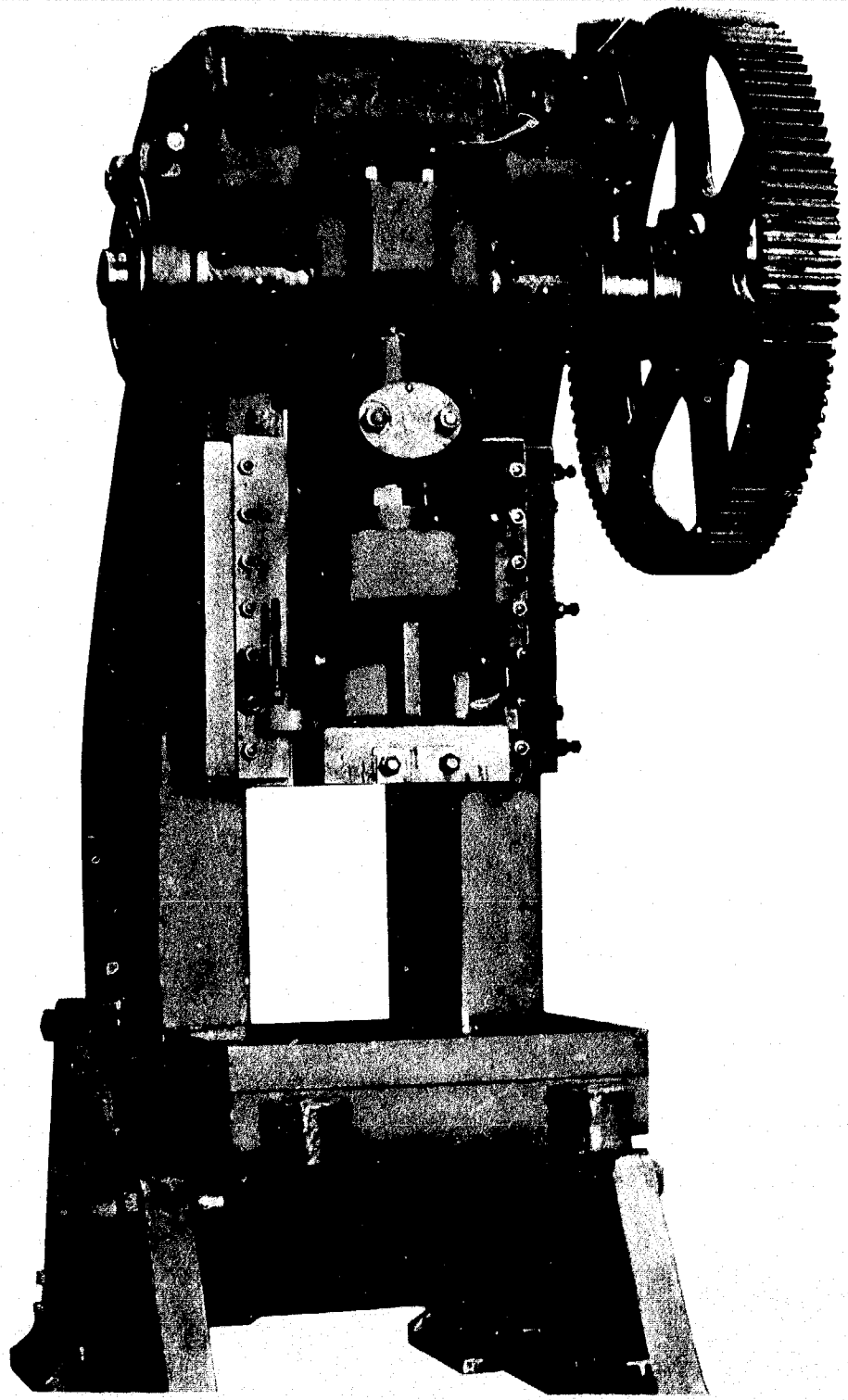

Figure 6 - Geared punch press

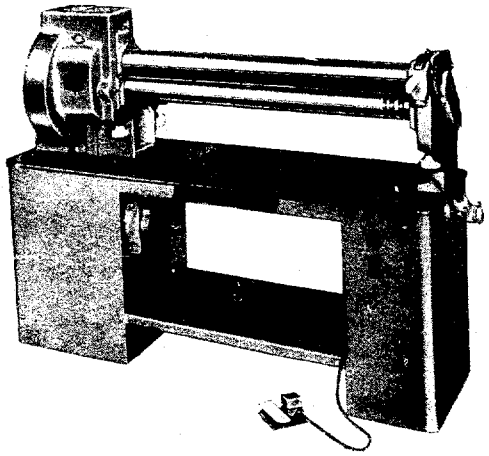

Figure 7 - Power roll forming machine

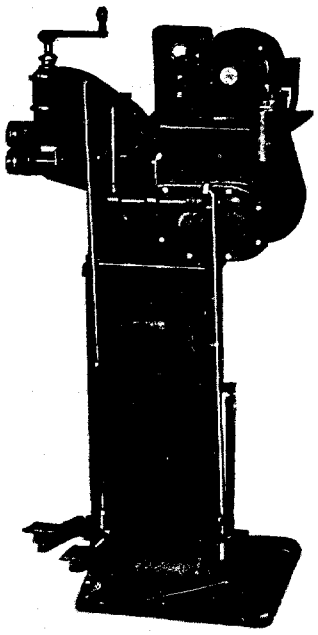

Figure 8 - Beading and flanging machine

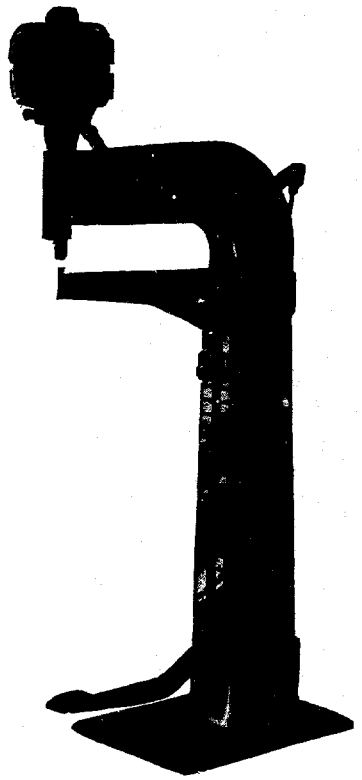

Figure 9 - Riveting machine

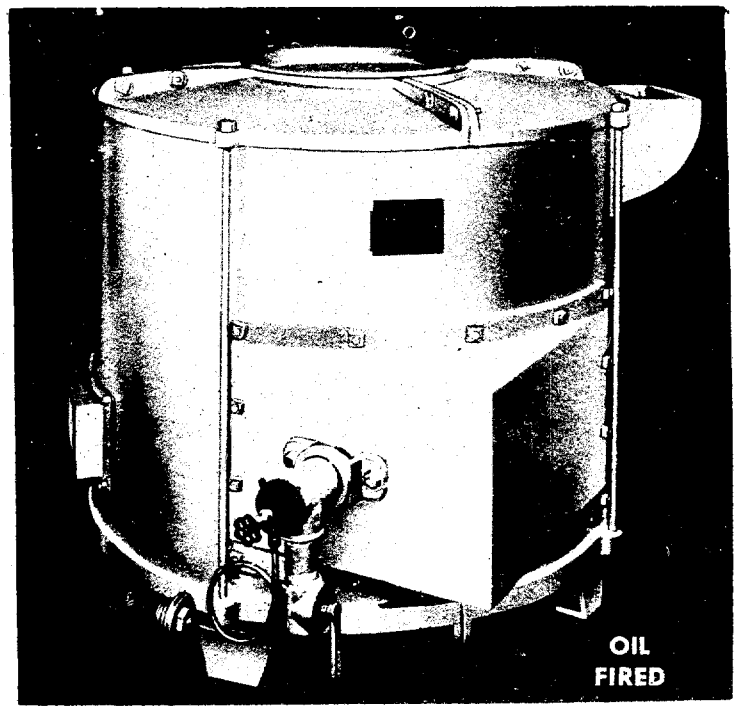


Figure 10 - Galvanizing kettle

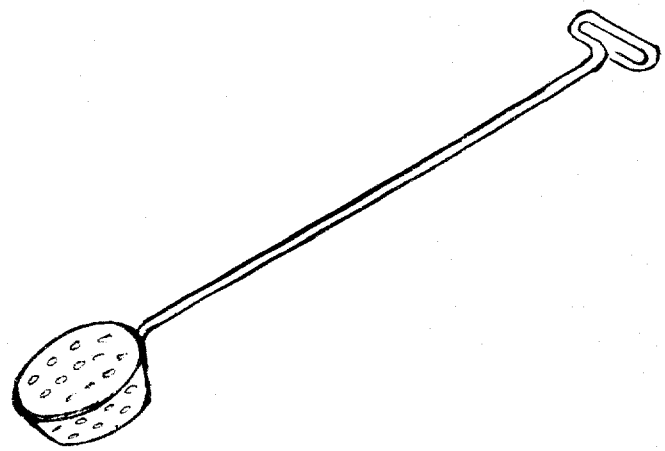

Figure 11 - Flux skimmer for clearing away flux upon removal of article from galvanizing kettle

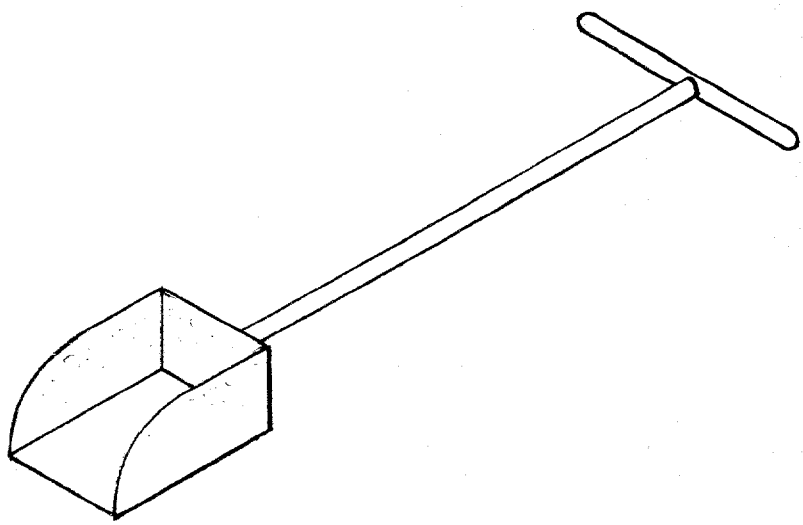

Figure 12 - Drossing spoon to scoop dross from bottom of galvanizing kettle

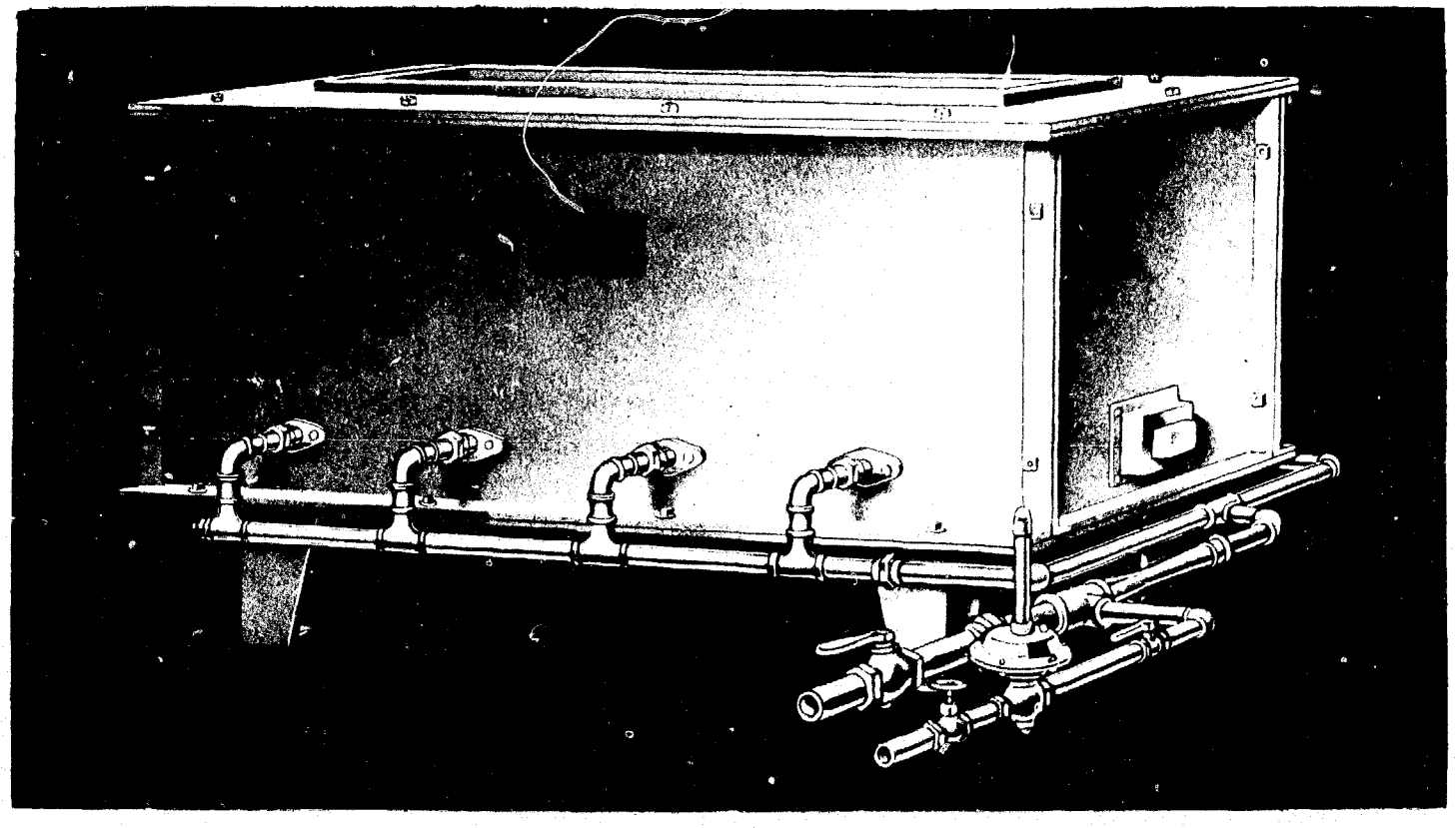

Figure 13 - Tin pot

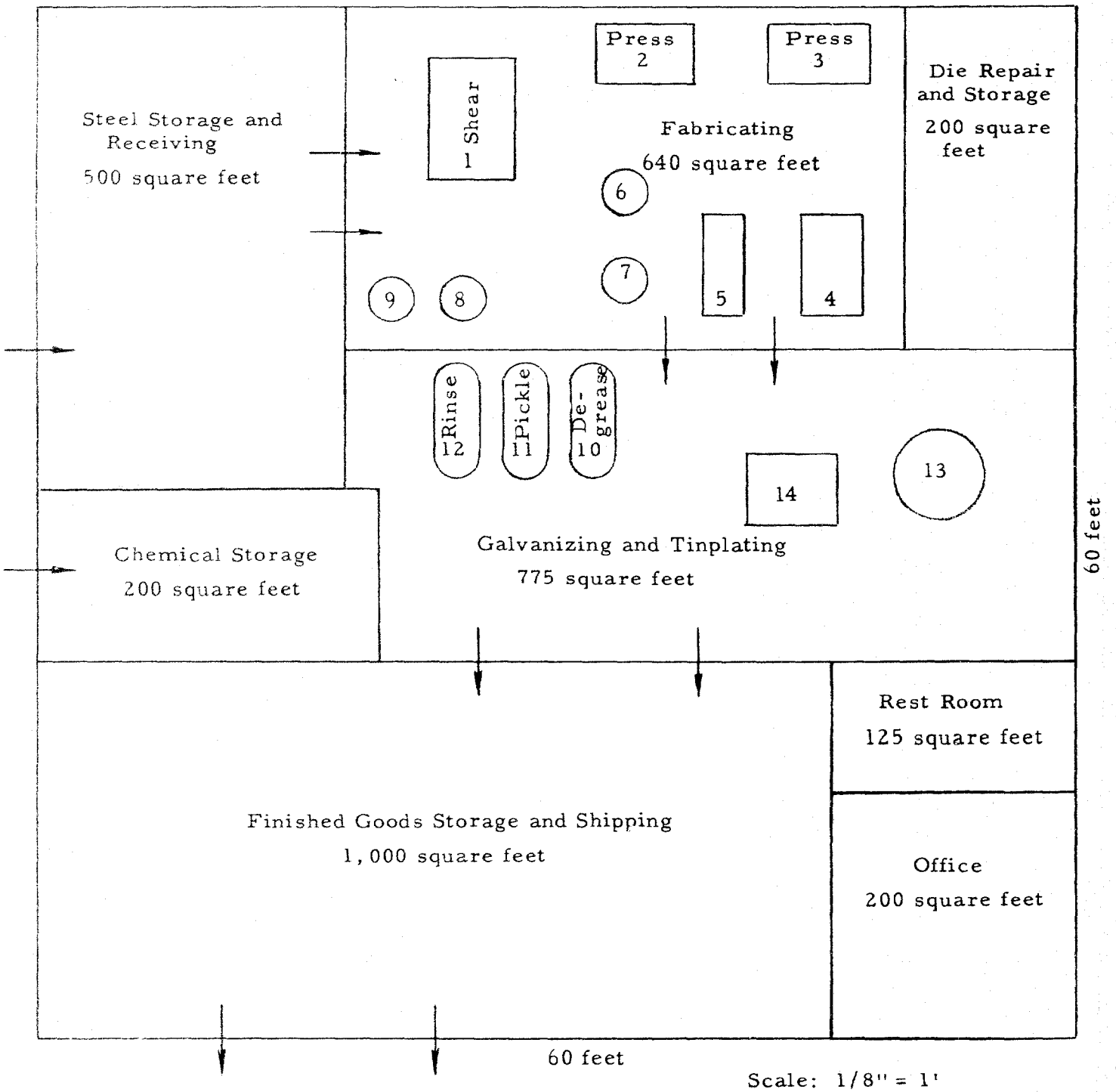


NOTE: Arrows indicate material flow

Key

1. Shear
2. Press - 45 ton
3. Press - 45 ton
4. Forming rolls
5. Beading and flanging machine
6. Side seamer
7. Bottom seamer
8. Riveting machine
9. Wire former
10. Degrease tank
11. Pickle tank
12. Rinse tank
13. Galvanizing kettle
14. Tinning pot

Figure 14 - Preliminary plant layout

# INTERNATIONAL COOPERATION ADMINISTRATION

## SERVICES OF THE INDUSTRIAL TECHNICAL COOPERATION PROGRAM

## TYPE III - TECHNICAL AIDS FOR OVERSEAS

- INDUSTRIAL REPORTS SERVICE

Provides basic information regarding:

1. Data and reference materials relating to private capital mobilization and its application in economic development.
2. Requirements for establishing and operating small factories in basic industries.
3. Man-hour requirements, operational characteristics, and equipment utilization in representative U. S. factories in selected industries.
4. Man-hour and materials savings through standardization, simplification, and specialization studies.
5. Supervisory and other specialized training procedures and techniques.
6. U. S. experience in specialized fields.

- TECHNICAL DIGEST SERVICE

Provides digests and abstracts, full length articles, and bibliographical references on U. S. developments in products, processes, and work techniques derived from U. S. technical, scientific, and trade periodicals, and other pertinent sources.

- TECHNICAL INQUIRY SERVICE

Provides answers to individual questions relating to products, processes, machinery and equipment, production operations, work techniques, management practices and concepts, factory engineering, and basic requirements for industrial production.

- TRAINING MATERIALS SERVICE

Provides basic materials for use by specialized technicians in the conduct of management, supervisory and specialized training courses in host countries.

- TECHNICAL LITERATURE SERVICE

Provides recommendations and guidance regarding current useful world-wide publications relating to industry and productivity improvement; distributes carefully selected and representative new publications of particular value for program use; and facilitates mission literature procurement.

- U. S. BOOK EXCHANGE SERVICE

Provides, on Mission approval, technical and scientific books and periodicals on exchange basis to overseas libraries.

- VISUALS AND NEW MEDIA

Provides technical advice and guidance to missions on new industrial visuals. Provides for cooperative program adaptation and use a variety of visual materials, including loan exhibits, silk-screen display panels, graphic brochures, slide and sound kits, and related materials.

- TECHNICAL FILM SERVICE

Provides guidance for and facilitates procurement of U. S. technical and training films for program use; provides representative U. S. technical industrial films and filmstrips on loan basis for short-term program requirements; and facilitates adaptation of films into foreign language versions for program use overseas.