AGENCY FOR INTERNATIONAL DEVELOPMENT
WASHINGTON, D. C. 20523

BIBLIOGRAPHIC INPUT SHEET

FOR AID USE ONLY
Batch 89

1. SUBJECT CLASSIFICATION	A. PRIMARY: Development and economics	DM00-0000-0000
	B. SECONDARY: Industries and industrialization	

2. TITLE AND SUBTITLE
Plant requirements for manufacture of laundry and milled toilet soap

3. AUTHOR(S)
(101) Methods Engineering Council, Pittsburgh, Pa.

4. DOCUMENT DATE	5. NUMBER OF PAGES	6. ARC NUMBER
1957	~~72p.~~ 73p.	ARC 668.12.L376

7. REFERENCE ORGANIZATION NAME AND ADDRESS
AID/TA/OST

8. SUPPLEMENTARY NOTES (Sponsoring Organization, Publishers, Availability)
(Plant requirement no.51)

9. ABSTRACT

10. CONTROL NUMBER PN-AAF-778	11. PRICE OF DOCUMENT
12. DESCRIPTORS Industrial plants Manufacturing Requirements Small scale industries Soaps	13. PROJECT NUMBER
	14. CONTRACT NUMBER AID/TA/OST
	15. TYPE OF DOCUMENT

AID 590-1 (4-74)

668.12
L 37L
P2-51

PLANT REQUIREMENTS FOR MANUFACTURE OF LAUNDRY AND MILLED TOILET SOAP

TECHNICAL AIDS BRANCH
INTERNATIONAL COOPERATION ADMINISTRATION
Washington, D. C.

FOREWORD

This brochure is one of a series of reports resulting from overseas technical inquiries on factory or commercial establishments, operation, management, and engineering. The report is designed to provide only a general picture of the factors that must be considered in establishing and operating a factory of this type. In most cases, plans for actual installations will require expert engineering and financial advice in order to meet specific local conditions.

Mention of the name of any firm, product, or process in this report is not to be considered a recommendation or an endorsement by the International Cooperation Administration, but merely a citation that is typical in its field.

Industrial reports prepared for ICA under special contract are customarily reviewed and edited before publication. This report, however, like other technical inquiry replies, has not been reviewed; it is the sole responsibility of the firm that prepared the report.

This brochure was prepared in May 1957 by the Methods Engineering Council Division, H. B. Maynard Company, Inc., Pittsburgh, Pa.

* * * * * *

For further information and assistance, contact should be made with the local Productivity Center, Industrial Institute, Servicio, or United States Operations Mission.

Code Number
51

THREE TONS PER DAY

TABLE OF CONTENTS

	Page
Procedure	1
Soap Making Methods	2
Soap Making Materials	3
Operations Required to Make Laundry Soap	6
Operations Required to Make Milled Toilet Soap	12
Equipment Requirements	17
Manpower Requirements	18
Building and Plant Layout	19
Overhead	20
Unit Cost Computation	24
Operating Capital	24
Conclusions	25
Soap -- Income and Expenses	26
Annual Financial Summary	27
Granite Roll Soap Mill	28
Amalgamator	29
Soap Plodder	30

TABLE OF CONTENTS

	Page
Procedure	1
Soap Making Methods	2
Soap Making Materials	3
Operations Required to Make Laundry Soap	6
Operations Required to Make Milled Toilet Soap	12
Equipment Requirements	17
Manpower Requirements	18
Building and Plant Layout	19
Overhead	20
Unit Cost Computation	24
Operating Capital	24
Conclusions	25
Soap -- Income and Expenses	26
Annual Financial Summary	27
Granite Roll Soap Mill	28
Amalgamator	29
Soap Plodder	30

LAUNDRY AND MILLED TOILET SOAP

AT THE RATE OF THREE TONS PER DAY

From a study made, an estimate of space requirements for a plant for the manufacture of Laundry and Milled Toilet Soap are:

Size of Building		7,000 square feet
Number of Employees		
Direct Labor	18	
Indirect Labor	7	
Total	25	
Cost of Building		$24,500
Cost of Equipment		67,400
Operating Capital		33,054
Unit Cost of Products		
Laundry Soap - per pound		$ .0685
Toilet Soap - per pound		$ .0986

PROCEDURE:

The first step is to investigate the methods, materials, and equipment used for making soap in the United States today. Glycerine, a valuable by-product of soap manufacture, is recovered and sold by plants producing a much larger quantity of soap than is planned for this factory. The high cost of the recovery equipment prohibits its use in a plant of this size.

SOAP MAKING METHODS:

Soap is generally considered to be the common cleansing agent so well known to everyone. In a strictly chemical sense, the term "soap" is limited to the salts of non-volatile fatty acids or combinations of these fatty acids with certain organic bases. In mentioning soap, the common interpretation is applied to the sodium or potassium salts of the higher fatty acids. It is generally known that most soap is made by combining a fat or oil with a water solution of either sodium hydroxide or potassium hydroxide.

Three recognized basic methods used in the making of soap are:

1. Full-boiled Process
2. Semi-boiled Process
3. Cold Process

The method most generally employed is the full-boiled process to form a soda soap. This process produces a neutral soap that is free from impurities, and superior in appearance, color, and texture to those produced by other methods.

For the purposes of this report, we believe the full-boiled process is the best method available.

The full-boiled process is carried on by a series of operations which the soap maker terms "changes". It is possible to make a full-boiled soap by as few as two of these changes, namely, the "strong" and the "finish" changes. Strong changes refer to the operation of completely saponifying the fat or oil, then graining and washing with lye. The objections to carrying out this method by as few as two changes are the complications which

arise in consuming the partly spent lye which is produced by the strong change, plus the fact that the color of the finished product suffers somewhat. When these considerations are taken into account, it seems advisable to carry out the full-boiled process with four or five changes.

A minimum of four changes during processing is suggested.

SOAP MAKING MATERIALS:

The chief use of soap is in the home for toilet and laundry purposes. This is by far the largest market for soap and the one most concerned with in this report.

Soap can be made from many different fats and oils. The following are the more common ones and their characteristics:

Tallow: More tallow is used in soap making than any other single fat. Tallow is the name given to the fat extract from the solid fat or suet of cattle, sheep, horses, and other animals. In countries where religious customs do not permit the use of animal fats, a vegetable oil is substituted.

Greases: Greases of various kinds rank next to tallow ... the volume of animal fats used by the soap maker. The better grades of greases are derived from hogs, while others are derived from skins, bones, or garbage.

Coconut Oil: Coconut oil is obtained from the fruit of the coconut palm. The fruit is found enclosed in a thick husk. The dried pulp, commonly known as "copra," contains from 60% to 70% oil which is obtained in

crude form by crushing the fruit. Coconut oil is very readily saponified (i.e., made into soap) and is the most important vegetable oil used in soap making. It is commonly used in combination with tallow or palm oil.

Palm Oil: Palm oil is obtained from the fruit of several species of palm trees. The oil produces a crumbly soap which cannot be readily milled. If mixed with tallow and coconut oil or 20 to 25% coconut oil, it does produce a satisfactory toilet soap.

Corn Oil: Corn oil does not find extensive use in soap making since it is quite adaptable to edible products. When used, it is mostly in soft potash soaps. The "foots" from the refining of corn oil are used in lower grades of commercial soaps.

Soya Bean: Soya bean oil yields an ideal soft soap. It saponifies fairly easily, and yields a pale yellow to dull white, soft soap. It forms a greasy lather of medium lasting quality and mild action on the skin.

Rosin: The use of rosin in the manufacture of soap adds to its cleansing and lathering properties. Soaps containing rosin are of the well-known yellow or brown color common to ordinary laundry soaps. They are not commonly used for toilet purposes.

Comparative "Hardness" and "Lathering" Properties of Various Oils

Hard Oils - Slow Lathering

Tallow

Greases

Whale and Fish Oils
Palm Oil
Lard

Hard Oils - Quick Lathering

Coconut Oil
Palm Kernel Oil

Soft Oils - Quick and Abundant Lather

Olive Oil
Soya Bean
Cottonseed
Corn
Castor

Material Requirements

The manufacturing procedures for laundry and toilet soaps are very similar. The raw materials for each type of soap are different. The total material requirements for one week's production are:

	Laundry Soap - 5 Tons			Toilet Soap - 10Tons		
	Pounds	Price	Total	Pounds	Price	Total
Tallow or Palm Oil	2385	$.07	$166.95	4770	$.07	$333.90
Soyabean or Coconut Oil	790	.13	102.70	1580	.13	205.40
Caustic Soda	555	.05	27.75	1110	.05	55.50
Rosin	450	.08	36.00			
Salt	1000	.01	10.00	2000	.01	20.00
Sodium Carbonate (58%)	185	.015	2.80			
Sodium Silicate	4110	.015	61.65			
Perfume				100	4.00	400.00
Cartons (2 dozen size)	1500	.05	75.00	3000	.05	150.00
Total Price			$482.85			$1164.80

The components listed as a basis for material requirements are only given as one example of soap formulation. This formulation may be changed to suit the desires of the individual soap maker, and the availability of the various ingredients.

OPERATIONS REQUIRED TO MAKE LAUNDRY SOAP:

Operation Number 1L First Brine Change

The most commonly used mixture for the soap base is one of tallow and coconut oil. Although the proportions may vary according to the preferences of the soap maker, it is customary to use 75% tallow and 25% coconut oil. The tallow and coconut oil are either pumped or gravity fed into the soap kettle. By means of a perforated coil inside the kettle, just enough steam is admitted to gently agitate the fats. (See figure 1.)

Caustic soda lye is gradually added to the fats in the kettle. In this case, the strong lyes resulting from previous boils may be used. Salt (sodium chloride) may be needed at this point of the operation to prevent "bunching" or curdling of the mass. Thirty pounds of salt should be adequate for a one ton charge.

The kettle is kept boiling until saponification is, in the main, complete. This requires approximately four hours. Salt is then added, allowed to dissolve, and the boiling continued until the soap is separated. The steam is shut off and the boil is allowed to settle. It is preferable that the settling should continue overnight. Lyes settle to the bottom of the kettle and the soap and unsaponified fat float on the top. The lyes are referred to as "spent lyes".

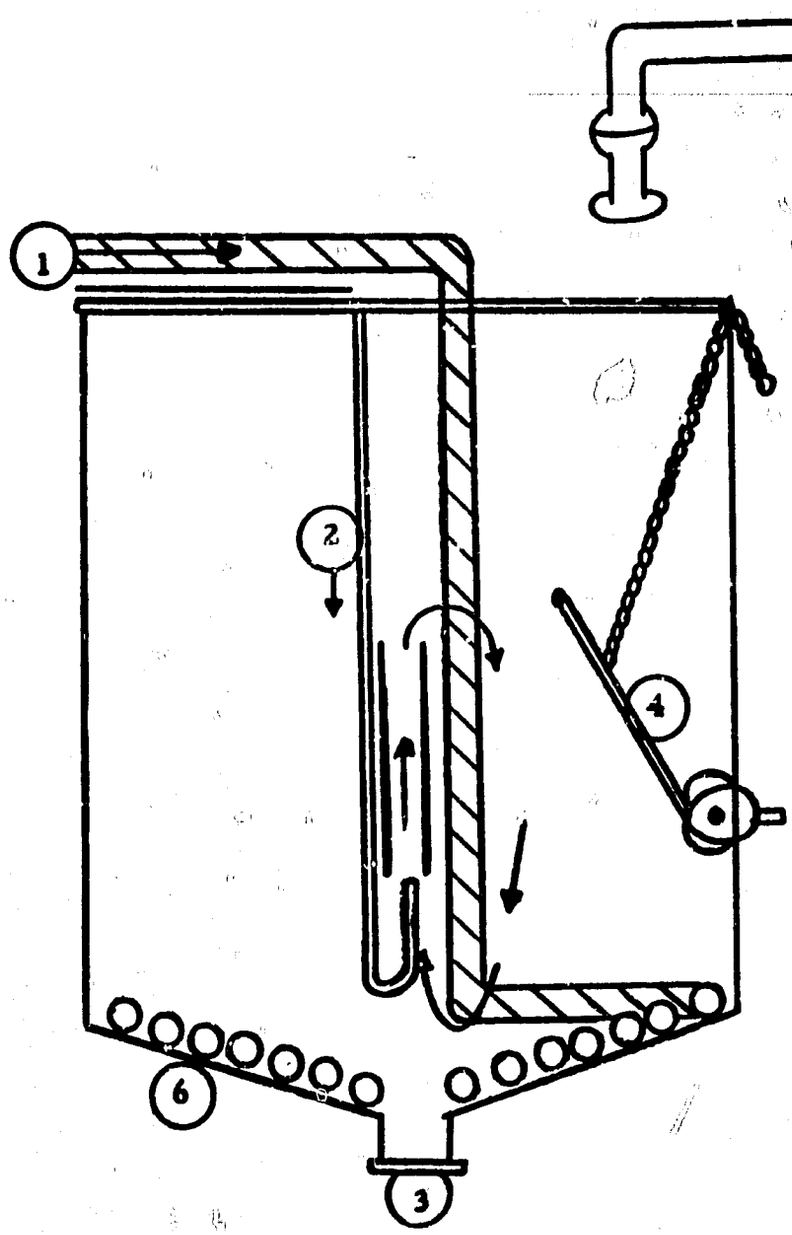

1 - Steam inlet for the perforated steam coil

2 - Steam for agitation

3 - Run-off for lye liquors and glycerine liquors

4 - Soap is pumped out through swing pipe

5 - Water spray

6 - Steam coils

Figure 1 - Soap Kettle

Operation Number 2L - Second Brine Change

After the soap kettle has settled, the next operation is to drain off the spent lyes through a valve at the bottom of the kettle. Steam is again admitted to the kettle through the coil and kept open until the soap boils vigorously. Water is sprayed on the soap as the boiling continues. This thins the soap to the condition referred to by soap makers as "closed". Caustic soda lye is again added to the kettle in the same manner as was described under the first salt change. After the lye has been added, the procedure of salting out or graining the kettle follows that which was described under the first brine change. The kettle is again allowed to settle overnight.

Operation Number 3L - The Strong Change

This change serves to wash out the excess salt which is present in the soap after the first two brine changes. If rosin is to be added to the soap, it should be done at this point. The first step in this change is to drain off the spent lyes. The soap is again boiled and lye and water are again added. The kettle is allowed to settle overnight. Lyes obtained from this change are termed "half-spent lyes", and are stored until required for a subsequent first brine change.

Operation Number 4L - The Finish

After the kettle has settled and the lyes have been drawn off, there are usually two layers of soap of different appearance and fatty acid content. The "neat" or settled soap is the upper layer. The lower layer is a softer, darker soap which is called "nigre".

The aim of the finish operation on the kettle of soap is to obtain the greatest possible yield of neat base soap and to obtain a quantity of nigre which is neither too large nor too small. It is advisable, when possible, to dispose of the nigres by boiling them into a darker grade of soap rather than follow a practice of continued boiling of soap over the same nigre. The neat soap is pumped away from the kettle by means of a swing pipe.

This finish operation requires several days because the settling must be very thorough. For the whole cycle of kettle operations, about one week is customary.

Operation Number 5L - Crutching and Filling

When the kettle of full-boiled settled soap is pumped out, the neat soap is run either directly to a crutcher or preferably to a heated and insulated storage tank. If a storage tank is used it should be large enough to accept the whole kettle charge. The crutcher is the piece of equipment in which fillers, color, or perfume are added to the liquid neat soap. The crutcher operation requires only ten to fifteen minutes. (A typical crutcher is shown in figure 2.) The soap should be from 140 to 150 degrees Fahrenheit for best working in the crutcher.

Operation Number 6L - Cooling Frames

The soap is drained from the crutcher into the frames. The frame is usually 13" wide x 56" long x 41" high, and when filled, will hold from 1000 to 1200 pounds of soap. The frame base is a four-wheeled dolly which facilitates moving the soap for subsequent processing. Framed soap usually requires from 3 to 5 days to cool and solidify. When the block has

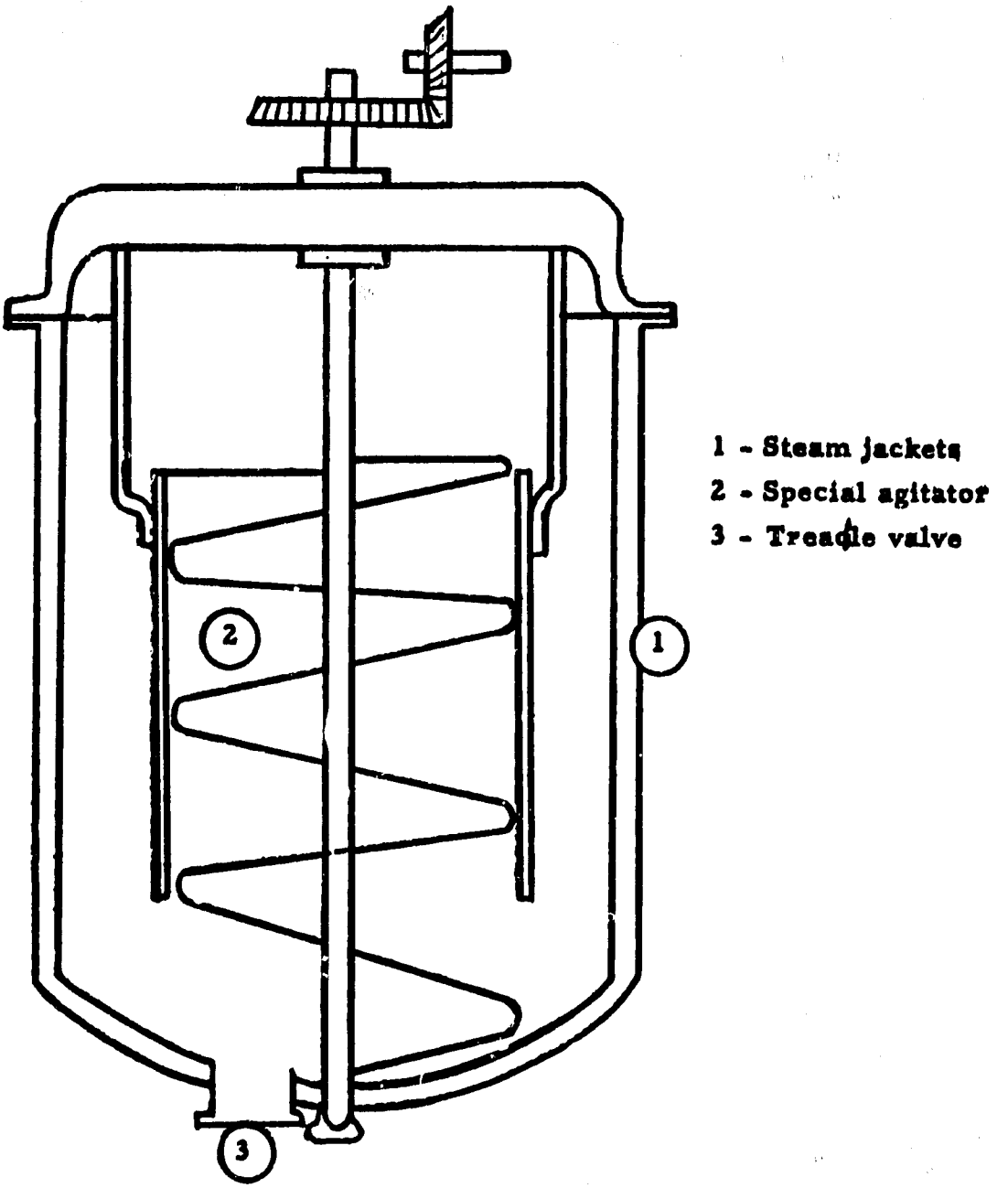

Figure 2 - Crutcher

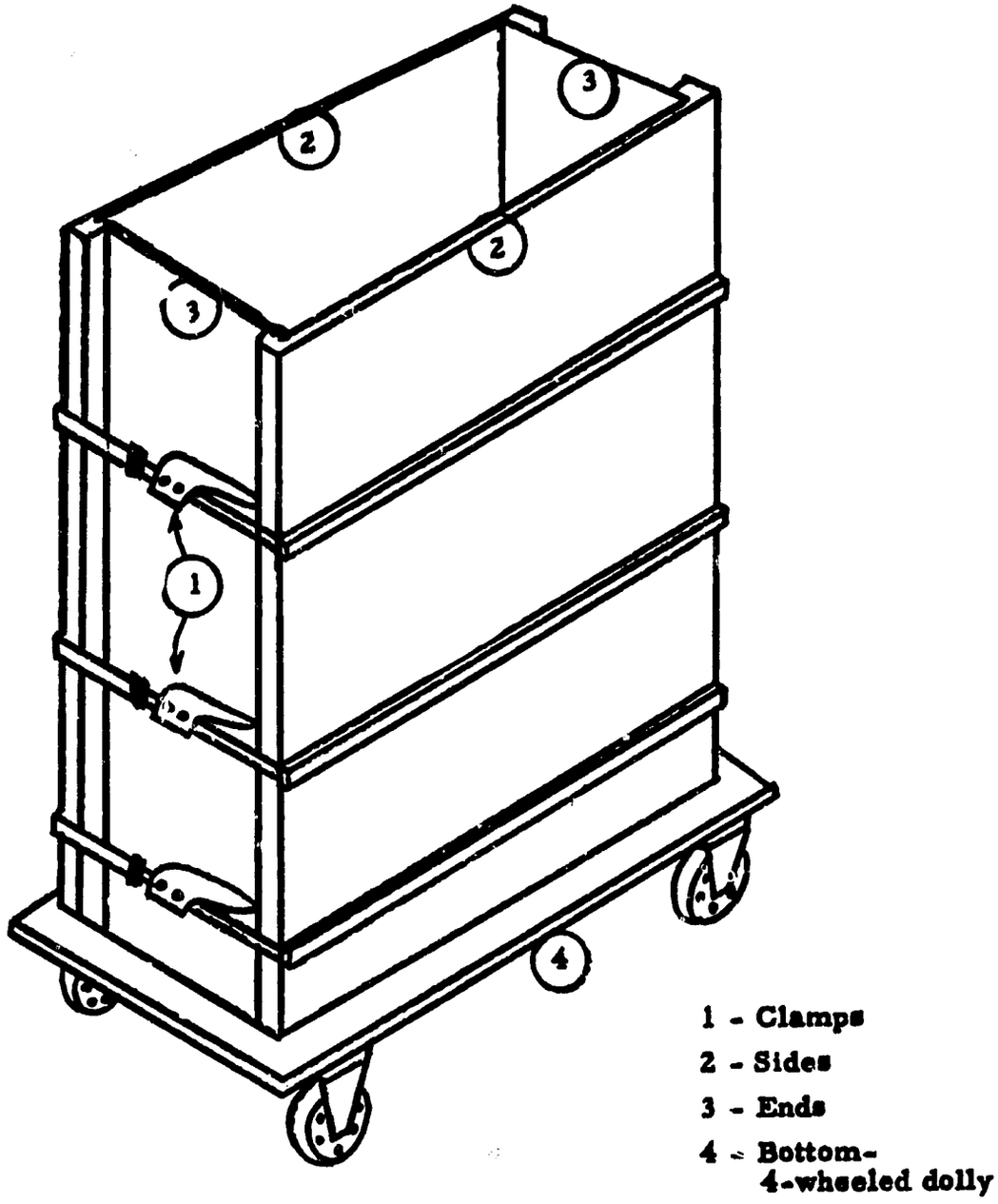

Figure 3 - Frame

solidified, the frame sides are stripped and the block cleaned preparatory to slabbing. (Figure 3 shows a typical frame.)

Operation Number 7L - Slabbing and Cutting

Slabbing reduces the block of soap to slabs and cutting reduces it to bars. The block of soap is wheeled on the frame dolly into position under the slabber. This machine may be either power or hand operated. The dolly wheels are blocked to prevent movement of the block during the operation. The slabbing is performed by pulling a series of taut piano wires, mounted in a strong angle iron frame, through the solid block of soap. The slabs are then placed on a cutting table (one at a time) which consists of two frames equipped with taut wires spaced at the correct distance to produce a cake of the desired size. The first frame of wires cuts the slab into bars. The second frame has wires at a 90 degree angle to the wires of the first frame and cuts the bars into cakes.

Operation Number 8L - Drying

The cakes of laundry soap are separated and stacked in racks to air dry for two days or more.

Operation Number 9L - Packing

The cakes are packed in cartons and are ready for storage or shipping.

OPERATIONS REQUIRED TO MAKE MILLED TOILET SOAP:

The production of milled soap is comparable to the laundry soap process as described up to this point. The base soap

must be full-boiled and settled to assure best results and the preferred base soap is one derived from a mixture of tallow and coconut oil.

When the base soap in the frame has cooled sufficiently (see Operation Number 6), the frame is stripped from the block. In the slabbing and cutting area of the plant, the block is first slabbed, then cut into long bars. These bars are placed on racks to permit further air drying since additional drying is usually necessary prior to the milling cycle.

Operation Number 1M

The long bars of base soap are ready for processing if their moisture content falls between 12 and 15 per cent. The bars are removed from the drying racks and moved to the chipper. (See figure 4.) The chipper is the revolving drum and blade type of machine and the bars of base soap are manually fed into the hopper. The chipping operation places the soap in a form that is workable for following operations.

The chips are spread over drying frames and conditioned further by air drying, and made up into batches of 200 or 300 pounds each.

Operation Number 2M

The batch of soap chips is next moved to an amalgamator. This is a blending-mixing machine. It is equipped with strong mixing blades and serves to thoroughly disperse the additives throughout the batch of soap chips.

The additives can be in the form of perfume, coloring substance, inert material, or medicinal matter. The time

LAYOUT FOR MILLING OPERATIONS

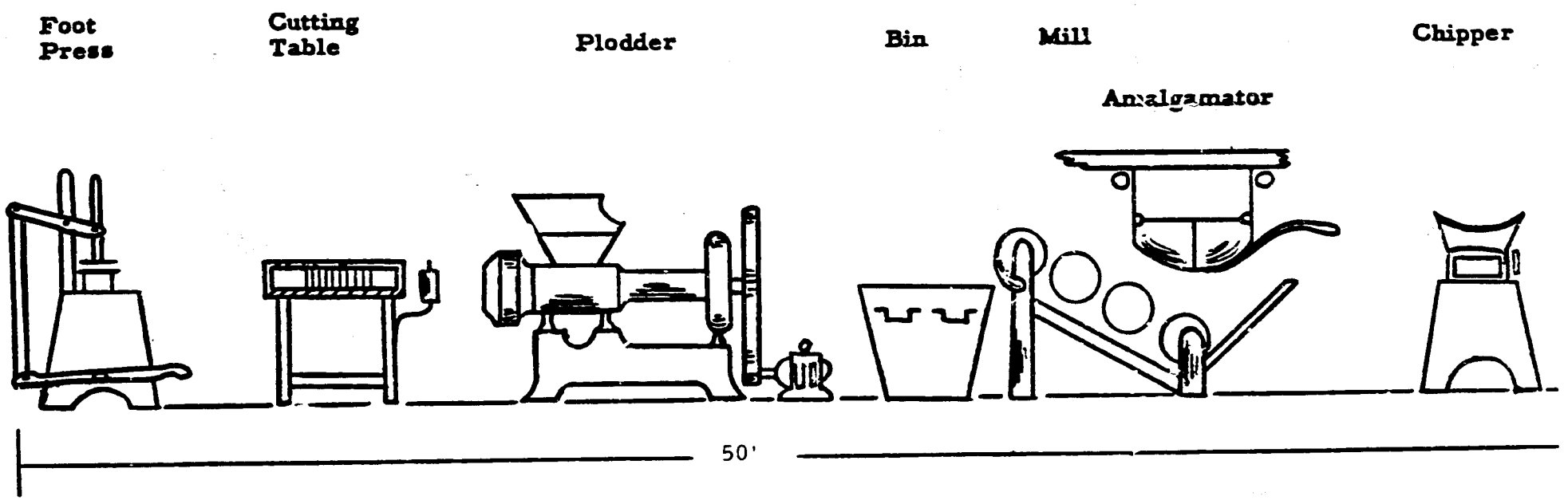

Figure 4

required to thoroughly mix a batch will vary from ten to fifteen minutes. The amalgamator serves its purpose best when located above the mill. This readily adapts its drop door feature to gravity feed of the chips.

Operation Number 3M

The batch of mixed chips in the amalgamator is delivered to the mill. A granite roll mill is recommended for plants of the size considered in this report. Water cooled steel roll mills are available for higher volume plants.

The mill usually consists of four rolls mounted in a heavy frame on an upward incline. The standard granite roll is about 18 inches in diameter by 30 inches long. A four-roll, granite mill will weigh about four tons.

Chip soap is fed to the rolls through a hopper. Each upward roll revolves somewhat faster than the previous one causing the sheet of soap to be taken to the faster moving roll. The last roll has a comb and knife attachment that strips the soap sheet off the roll and cuts it into ribbons about 3/4 inch wide.

To assure a thoroughly milled product, the ribbons should be milled a second time. The second milling may be accomplished by passing the ribbons through the same mill twice, or by feeding them from one mill to the other.

Operation Number 4M

The soap ribbons produced by the final milling cycle are moved directly to the feed hopper of a Finish Plodder. The plodder is

a screw-type extruder. The material is placed in a feed hopper and the revolving screw forces it into a compression chamber. A nozzle die plate mounted on the end of the compression chamber determines the cross sectional shape of the extruded bar of soap. The cylinder of the plodder is water jacketed to dissipate the heat generated in the compression chamber. Metering the flow of cooling water will maintain the temperature of the soap at the desired temperature for this operation -- 115 degrees Fahrenheit. As the soap emerges at the nozzle, heat supplied by a gas flame or electrical strip heater is applied to the bar. This heat polishes the bar of soap as fast as it emerges from the nozzle.

Operation Number 5M

The bar of soap emerges from the Finish Plodder and passes through the cutting table. The bar is cut to an exact length and is then pushed through a series of taut piano wires. These wires cut the bar into rough cakes. The spacing of the cutting wires is an important factor since it determines the size of the final cake. Keeping the cutting table and cutting wires clean will assure production of unmarked cakes of uniform weight -- ready for the pressing operation.

Operation Number 6M

Most milled soaps are pressed by automatic or semi-automatic equipment. When the volume of product is small, the use of foot operated presses is recommended. Experienced foot press operators can press 75 gross per day.

The critical factors in the pressing operation are found in the alignment and cleanliness of the dies. The condition of the cake also determines the success of the pressing operation. A cake of soap that is too soft or too dry will not press properly.

Following the pressing operation, the cakes should be spread on racks and allowed to air dry until a slight surface skin develops. This skin will preserve the quality of finish during the subsequent operations. However, it is well to warn that too much drying at this point in the process would result in weight losses by the cake.

Operation Number 7M

The final operation in the process of making milled toilet soap is wrapping and packaging. Hand or semi-automatic wrapping is recommended for low volume production. The soap cake should be wrapped soon after the pressing operation. A layer of waxed paper between the cake and outside wrapper will avoid moisture losses and consequent weight changes. When the wrapping is completed, the cakes are packed in suitable cartons and are then ready for shipment or stock.

EQUIPMENT REQUIREMENTS:

The foregoing portions of this report describe the procedures and equipment used in making laundry and milled soap by the boiled soap process. Only the raw materials or additives will be changed for certain operations. The equipment is therefore adaptable to the making of a variety of soaps by formulation. Generally speaking, we have endeavored to hold investment costs to a minimum while manpower requirements were increased. This line of thinking was strongly influenced by the low labor rates prevailing in the areas under consideration.

The following equipment is suggested:

		Estimated Cost	Number Required	Total Cost
1.	Boiler - 60 HP, and Auxiliaries	$20,000	1	$20,000
2.	Storage Tanks -- 8' Dia. x 6' Deep	400	5	2,000
3.	Soap Kettles -- 10' Dia. x 12' Deep	1,200	3	3,600
4.	Crutcher -- 1500 lbs. Capacity	1,200	1	1,200
5.	Frames and Dollies 1,200 lbs. Capacity	150	60	9,000
6.	Slabbing and Cutting Frame	500	1	500
7.	Drying Racks and Trays	5,000	1 lot	5,000
8.	Miscellaneous Equipment (Material Bins, Hoists, Shovels, Paddles, Laboratory Testing Equipment)	3,500	1 lot	3,500
9.	Pumps (Centrifugal Type)	250	3	750
10.	Chipper, complete with motor	1,000	1	1,000
11.	Amalgamator	2,000	1	2,000
12.	Mill, Granite Roll	6,000	2	12,000
13.	Plodder, 8" screw	2,500	2	5,000
14.	Cutting Table	150	1	150
15.	Foot Presses	350	2	700
16.	Office Equipment	1,000	1 lot	1,000
	Total Equipment Cost			$67,400

MANPOWER REQUIREMENTS:

Knowing what process will be used and the equipment requirements for that process enables estimation of the total man hours required to produce the two tons of milled and one ton of laundry soap per week. As previously stated, the recovery of glycerine is disregarded due to the prohibitive cost of the necessary equipment.

A suggested labor distribution for the plant is:

		Direct	Indirect
1.	Kettle Man	2	
2.	Crutcher Man	1	
3.	Framer	1	
4.	Slabber and Cutter	1	
5.	Drying Room Material Handlers	2	
6.	Chipper }	1	
7.	Amalgamator }		
8.	Mill Operator	2	
9.	Finish Plodder	2	
10.	Cutting Table Operator	1	
11.	Foot Press Operator	2	
12.	Wrap and Pack	3	
13.	Foreman		1
14.	Office		2
15.	Boiler Operator		1
16.	Maintenance		2
17.	Janitor		1
	Total Manpower	18	7

BUILDING AND PLANT LAYOUT:

The next problem encountered in preparing this report is to determine the spatial requirements for all operations. Sufficient floor space is provided to permit free and unobstructed movement by the operators.

The ideal soap plant layout is generally considered to be one in which the sequence of operations always moves the product in the same direction. The direction is sometimes downward from a higher to a lower level -- thus affording the use of

gravity in place of expensive pumping. To accomplish this and still not use a multi-story building, it is necessary to elevate some of the equipment and provide catwalks and platforms to serve as the working surface. Equipment should be located in the center of the building where the roof height is maximum. In the interests of economy, a modified "Quonset-type" steel building is adequate.

The cost of erecting a building of this type and installing the necessary wiring, plumbing, platforms, catwalks, and allied services will be about $3.50 per square foot. A building 50 feet by 140 feet to accommodate the soap making operation is recommended. The 7,000 square foot building would cost approximately $24,500.

A suggested layout for the plant is shown in figure 5.

OVERHEAD:

The amount of overhead that must be charged to each direct hour of labor must be determined. This consists of depreciation, indirect labor cost, utilities, and supplies.

1. Indirect Labor Charge is the total weekly pay of all the indirect labor. There are seven indirect workers working 40 hours per week at a rate of $.30 per hour. This gives a total indirect labor cost of 7 x 40 x $.30 or $84.00 per week.

2. Utilities and Supplies include the cost of light, heat, plant supplies, and office supplies for a one-week period. We estimate that $590 per week is required for these items.

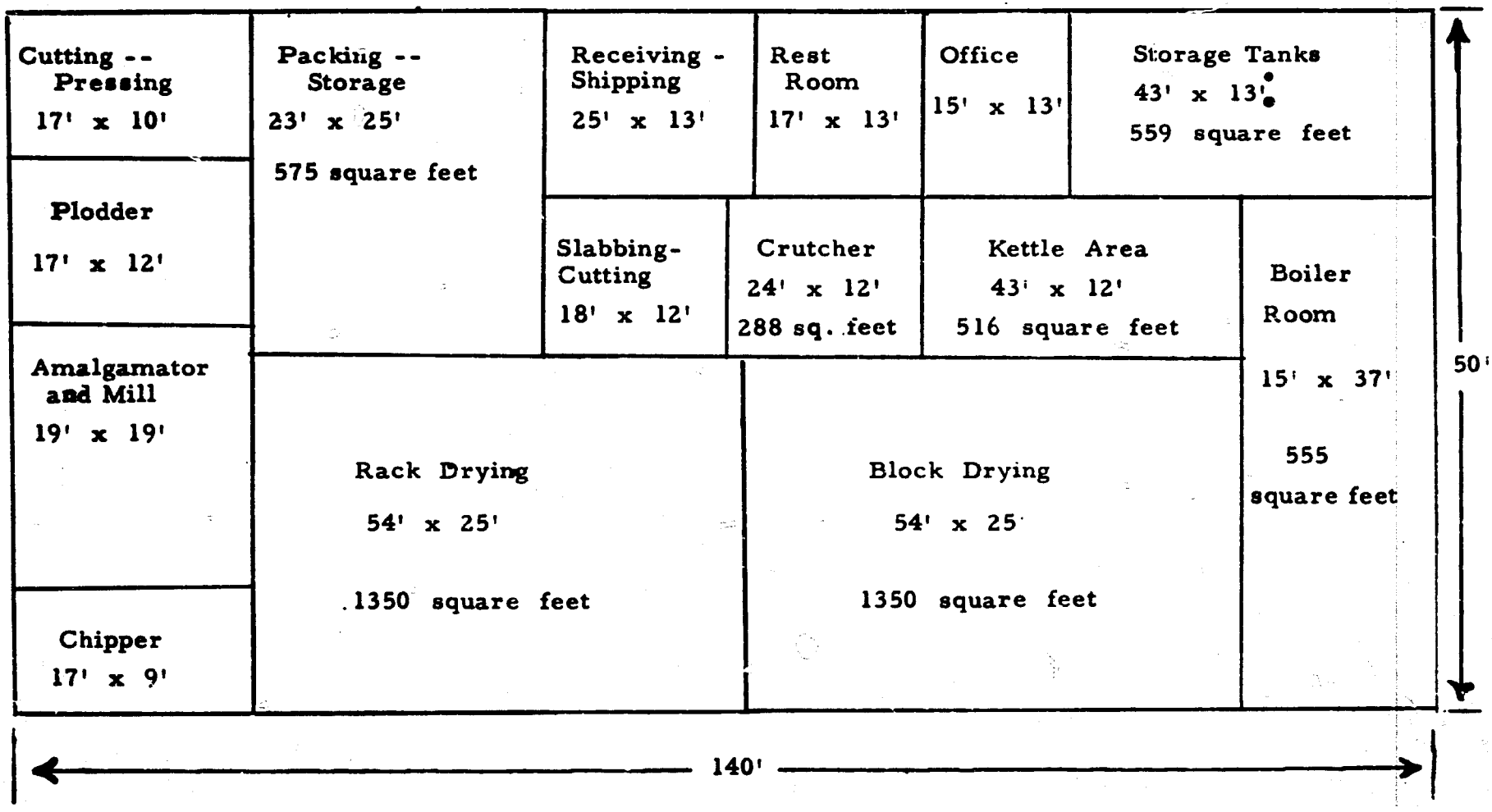

PLANT LAYOUT

Figure 5

Area = 7,000 square feet

3. Depreciation is charged on all capital equipment. The following schedule for depreciation is suggested:

		Original Cost	Number of Years	Yearly Depreciation
1.	Building	$24,500	20	$1,225
2.	Boiler and Auxiliaries	20,000	20	1,000
3.	Storage Tanks	2,000	10	200
4.	Soap Kettles	3,600	10	360
5.	Crutcher	1,200	20	60
6.	Frames and Dollies	9,000	20	450
7.	Slabbing and Cutting Frame	500	20	25
8.	Drying Racks and Trays	5,000	20	250
9.	Miscellaneous Equipment	3,500	5	700
10.	Pumps	750	5	150
11.	Chipper	1,000	20	50
12.	Amalgamator	2,000	20	100
13.	Mill, Granite Roll	12,000	10	1,200
14.	Plodder	5,000	20	250
15.	Cutting Table	150	10	15
16.	Foot Press	700	10	70
17.	Office Equipment	1,000	5	200
	Total	$91,900		$6,305

4. Summation of Overhead Costs

Weekly Depreciation	$121.25
Weekly Indirect Labor	84.00
Utilities per week	550.00
Office supplies per week	40.00
Total Weekly Overhead Cost	$795.25

5. <u>Calculated Overhead Rate</u>

The overhead rate is based on the number of direct labor hours. All labor, both direct and indirect, is figured at $.30 per hour. The rate is determined by the following computation:

$$\text{Overhead rate} = \frac{\text{Total Weekly Overhead Cost}}{\text{Total Weekly Direct Labor Hours}}$$

$$= \frac{\$795.25}{18 \text{ men} \times 8 \text{ hours/day} \times 5 \text{ days/week}}$$

$$= \frac{\$795.25}{720 \text{ man hours/week}} = \$1.10 \text{ per man hour}$$

6. <u>The Unit Cost</u> is now determined. Consider the unit as one pound of soap for cost purposes.

Laundry soap production is 10,000 pounds per week. Toilet soap production is 20,000 pounds per week.

It requires very close to twice as many man hours to produce one pound of toilet soap as one pound of laundry soap. Therefore, two thirds of the 720 direct labor hours per week is used for toilet soap and one third for laundry soap.

The unit cost is determined algebraically as follows:

Let X = man hours required to make 1 pound of laundry soap
2X = man hours required to make 1 pound of milled soap

Then 10,000 X = man hours required to make 5 tons of laundry soap
20,000 . 2X = man hours required to make 10 tons of milled soap

Or 50,000 X = 720 = total direct labor hours per week

X = .0144 man hours per pound of laundry soap

2X = .0288 man hours per pound of toilet soap

UNIT COST COMPUTATION

		Laundry Soap	Milled Toilet Soap
Labor:	.0144 hours/pound x $.30/hour	$.00432	
	.0288 hours/pound x $.30/hour		$.00864
Materials:	$ 482.85 for 10,000 pounds	.04829	
	$1164.80 for 20,000 pounds		.05824
Overhead:	Rate x hours/pound		
	1.10 x .0144	.01584	
	1.10 x .0288		.03168
Unit Cost per pound of soap		$.0685	$.0986

OPERATING CAPITAL:

Having determined the unit cost of the product, the factor to be determined now is the amount of operating capital required. This estimate is based on the following items:

Item	Laundry Soap	Milled Toilet Soap	Total
Raw Material Inventory 4 weeks' production	$1931.40	$4659.20	$6590.60
In Process Inventory 1 week's production	482.85	1164.80	1647.65
Finished Goods Inventory 4 weeks' production	2740.00	7888.00	10628.00

Accounts Receivable 4 weeks' production	2740.00	7888.00	10628.00
Expenses of 4 weeks' production Wages Utilities			 1200.00 2360.00
Total Required Operating Capital			$33054.25

CONCLUSIONS:

We have specified a soap plan with a capacity of three tons per day. Two tons will be milled toilet soap and the remaining ton, laundry soap.

The laundry soap cost is $.07 per pound and the milled toilet soap cost is $.10 per pound. Material represents 70% of the cost of laundry soap; overhead is 23%; and labor is 7%. For toilet soap material represents 59% of the unit cost; overhead is 32%; and labor is 9%.

Tabulations summarizing the financial requirements, income, and expenses are shown in Charts A and B.

SOAP -- INCOME AND EXPENSES

Sales Income:		
_____ pounds Laundry Soap @ $	$xxx.xx	
_____ pounds Milled Toilet Soap @ $	xxx.xx	
Total Sales Income		$xxx.xx
Cost of Manufacturing:		
_____ pounds Laundry Soap @ $.0685	xxx.xx	
Labor .0043		
Material .0483		
Overhead .0159		
_____ pounds Milled Toilet Soap @ $.0986	xxx.xx	
Labor .0086		
Material .0582		
Overhead .0318		
Total Product Cost		xxx.xx
Sales Expenses:		
Advertising		
Freight		
Commission		
Others		
Total Sales Expense		
Total Cost of Sales		
Profit		
Sales Expenses and Profits		

Chart A

ANNUAL FINANCIAL SUMMARY

For

Manufacture of Laundry and Milled Toilet Soap

Current Assets		
Cash	_____	_____
Accounts Receivable	10,628.00	
Inventories		
Raw Material	6,590.60	
In-Process	1,647.65	
Finished Goods	10,628.00	
Fixed Assets		
Building	24,500.00	
Depreciation per year		1,225.00
Office Equipment	1,000.00	
Depreciation per year		200.00
Production Equipment (Durable)	67,400.00	
Depreciation per year		4,230.00
Production Equipment (Non-durable)	4,250.00	
Depreciation per year		850.00
Operating Accounts		
Income		
Sales - See Chart A	_____	
Expenses		
Purchases		
Office Supplies	2,080.00	
Raw Materials	85,677.80	
Wages		
Utilities	28,600.00	
Sales Expense - See Chart A	_____	
General Depreciation (Exclude Bldg.)	5,280.00	
Others	_____	

Chart B

Granite Roll Soap Mill

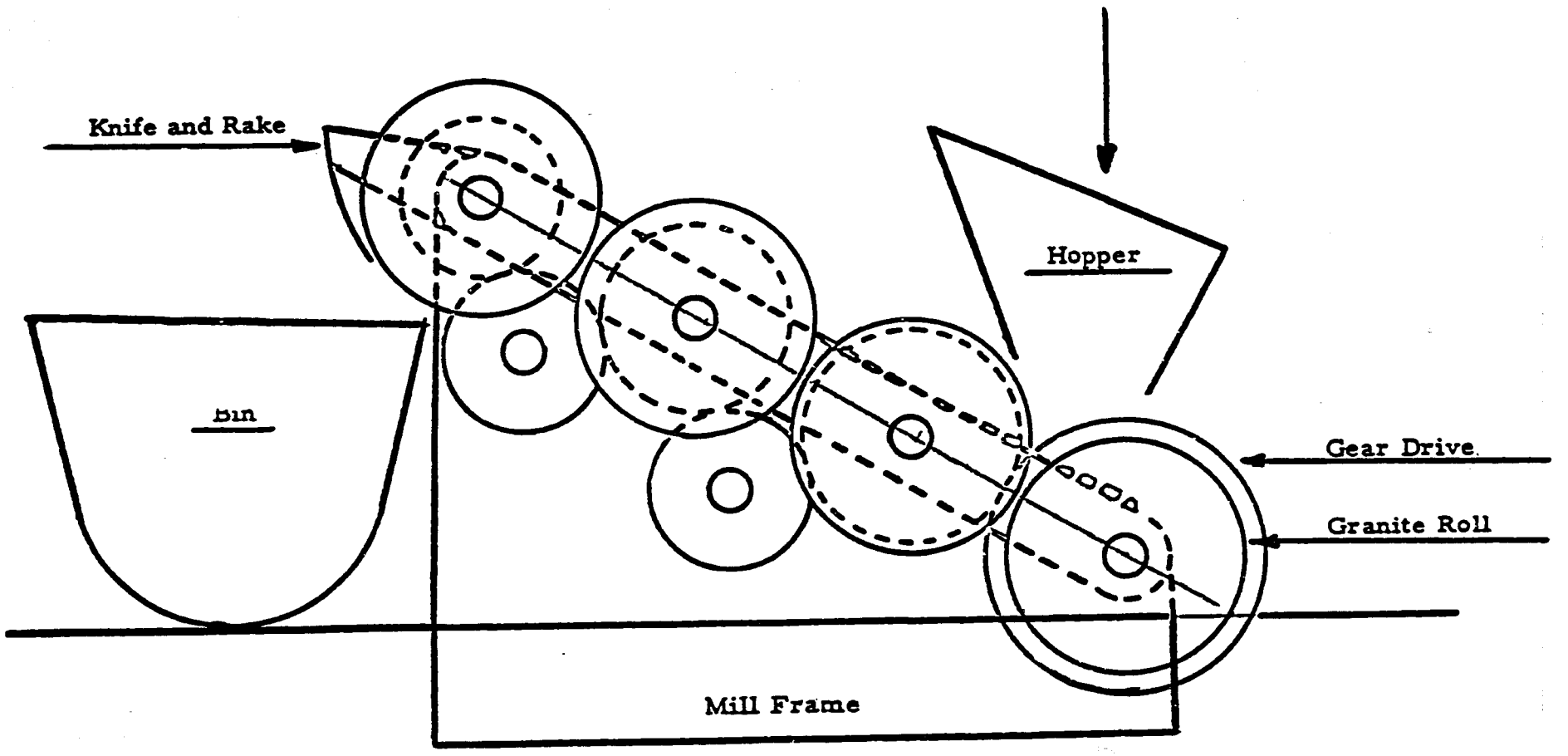

Figure 6

Approximate scale: 1" = 1'0"

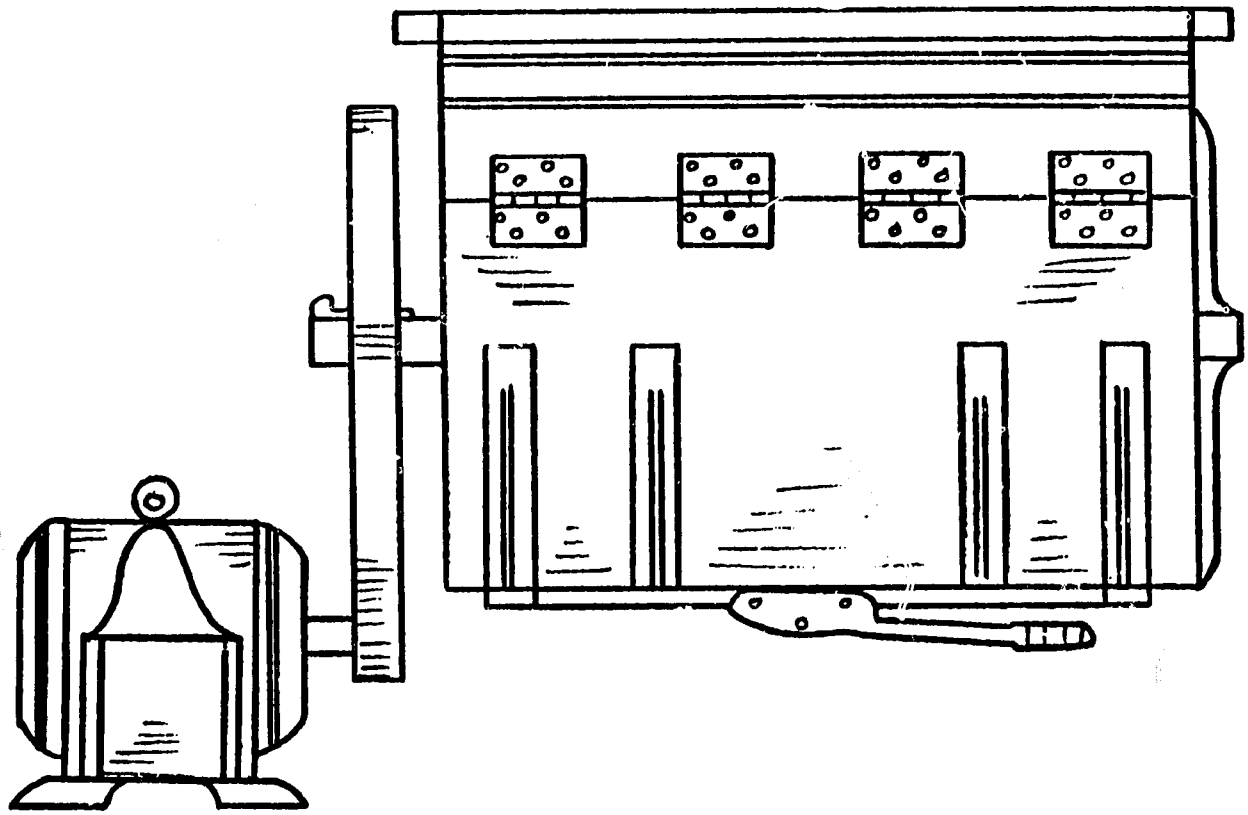

Figure 7 - Amalgamator

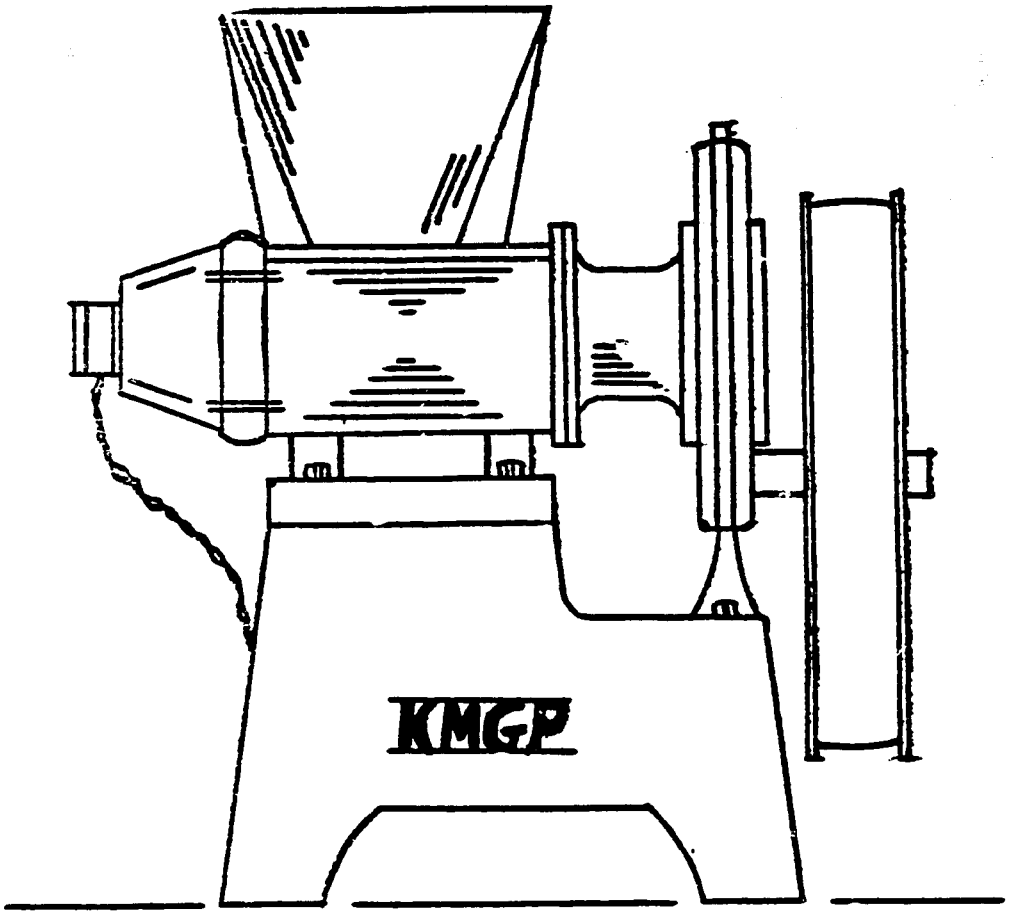

Soap Plodder

Figure 8

Approx. Scale: 1" = 1'0"

THREE TONS PER WEEK

TABLE OF CONTENTS

	Page
Procedure	33
Soap Making Methods	34
Soap Making Materials	35
Operations Required to Make Laundry Soap	38
Operations Required to Make Milled Toilet Soap	44
Equipment Requirements	49
Manpower Requirements	50
Building and Plant Layout	51
Overhead	52
Operating Capital	56
Conclusions	57
Appendix	63

LAUNDRY AND MILLED TOILET SOAP

AT THE RATE OF THREE TONS PER WEEK

From a study made, an estimate of space requirements for the installation of a plant for the manufacture of Laundry and Milled Soap are:

Size of Building		4,000 square feet
Number of Employees Required		
Direct Labor	14	
Indirect Labor	7	
Total Labor	21	
Cost of Building		$14,000.00
Cost of Equipment		35,400.00
Operating Capital		9,698.85
Unit Cost of Products		
Laundry Soap - per pound		$ .0959
Milled Toilet Soap - per pound		$ .1534

PROCEDURE

The first step is to investigate the methods, materials, and equipment used for making soap in the United States today. The three tons per week production capacity places this project in the scope of a very small plant. The low productive output and the extremely high cost of necessary equipment makes the recovery of the crude glycerine uneconomical.

SOAP MAKING METHODS

Soap is generally considered to be the common cleansing agent so well known to everyone. In a strictly chemical sense, the term "soap" is limited to the salts of non-volatile fatty acids or combinations of these fatty acids with certain organic bases. In mentioning soap, the common interpretation is applied to the sodium or potassium salts of the higher fatty acids. It is generally known that most soap is made by combining a fat or oil with a water solution of either sodium hydroxide or potassium hydroxide.

Three recognized basic methods used in the making of soap are:

1. Full-boiled Process
2. Semi-boiled Process
3. Cold Process

The method most generally employed is the full-boiled process to form a soda soap. This process produces a neutral soap that is free from impurities, and superior in appearance, color, and texture to those produced by other methods.

For the purposes of this report, we believe the full-boiled process is the best method available.

The full-boiled process is carried on by a series of operations which the soap maker terms "changes". It is possible to make a full-boiled soap by as few as two of these changes, namely, the "strong" and the "finish" changes. Strong changes refer to the operation of completely saponifying the fat or oil, then graining and washing with lye. The objections to carrying out this method by as few as two changes are the complications which

arise in consuming the partly spent lye which is produced by the strong change, plus the fact that the color of the finished product suffers somewhat. When these considerations are taken into account, it seems advisable to carry out the full-boiled process with four or five changes.

A minimum of four changes during processing is suggested.

SOAP MAKING MATERIALS

The chief use of soap is in the home for toilet and laundry purposes. This is by far the largest market for soap and the one most concerned with in this report.

Soap can be made from many different fats and oils. The following are the more common ones and their characteristics:

Tallow: More tallow is used in soap making than any other single fat. Tallow is the name given to the fat extract from the solid fat or suet of cattle, sheep, horses, and other animals. In countries where religious customers do not permit the use of animal fats, a vegetable oil is substituted.

Greases: Greases of various kinds rank next to tallow in the volume of animal fats used by the soap maker. The better grades of greases are derived from hogs, while others are derived from skins, bones, or garbage.

Coconut Oil: Coconut oil is obtained from the fruit of the coconut palm. The fruit is found enclosed in a thick husk. The dried pulp, commonly known as "copra," contains from 60% to 70% oil which is obtained in

crude form by crushing the fruit. Coconut oil is very readily saponified (i.e., made into soap) and is the most important vegetable oil used in soap making. It is commonly used in combination with tallow or palm oil.

Palm Oil: Palm oil is obtained from the fruit of several species of palm trees. The oil produces a crumbly soap which cannot be readily milled. If mixed with tallow and coconut oil or 20 to 25% coconut oil, it does produce a satisfactory toilet soap.

Corn Oil: Corn oil does not find extensive use in soap making since it is quite adaptable to edible products. When used, it is mostly in soft potash soaps. The "foots" from the refining of corn oil are used in lower grades of commercial soaps.

Soya Bean: Soya bean oil yields an ideal soft soap. It saponifies fairly easily, and yields a pale yellow to dull white, soft soap. It forms a greasy lather of medium lasting quality and mild action on the skin.

Rosin: The use of rosin in the manufacture of soap adds to its cleansing and lathering properties. Soaps containing rosin are of the well-known yellow or brown color common to ordinary laundry soaps. They are not commonly used for toilet purposes.

Comparative "Hardness" and "Lathering" Properties of Various Oils

Hard Oils - Slow Lathering

Tallow

Greases

Whale and Fish Oils

Palm Oil

Lard

Hard Oils - Quick Lathering

Coconut Oil

Palm Kernel Oil

Soft Oils - Quick and Abundant Lather

Olive Oil

Soya Bean

Cottonseed

Corn

Castor

Material Requirements

The manufacturing procedures for laundry and toilet soaps are very similar. The raw materials for each type of soap are different. The total material requirements for one week's production are:

	Laundry Soap - 1 Ton			Toilet Soap- 2 Tons		
	Pounds	Price	Total	Pounds	Price	Total
Oils and Fats						
Tallow (Palm Oil)	477	.07	33.39	954	.07	66.78
Soyabean (Coconut Oil)	158	.13	20.54	316	.13	41.08
Caustic Soda	111	.05	5.55	222	.05	11.10
Rosin	90	.08	7.20			
Salt	200	.01	2.00	400	.01	4.00
Sodium Carbonate(58%)	37	.015	.56			
Sodium Silicate	822	.015	12.33			
Perfume				20	4.00	80.00
Cartons (2 dozen size)	300	.05	15.00	600	.05	30.00
Total Price			$96.57			$232.96

The components listed as a basis for material requirements are only given as one example of soap formulation. This formulation may be changed to suit the desires of the individual soap maker, and the availability of the various ingredients.

OPERATIONS REQUIRED TO MAKE LAUNDRY SOAP

Operation Number 1L First Brine Change

The most commonly used mixture for the soap base is one of tallow and coconut oil. Although the proportions may vary according to the preferences of the soap maker, it is customary to use 75% tallow and 25% coconut oil. The tallow and coconut oil are either pumped or gravity fed into the soap kettle. By means of a perforated coil inside the kettle, just enough steam is admitted to gently agitate the fats. (See figure 1.)

Caustic soda lye is gradually added to the fats in the kettle. In this case, the strong lyes resulting from previous boils may be used. Salt (sodium chloride) may be needed at this point of the operation to prevent "bunching" or curdling of the mass. Thirty pounds of salt should be adequate for a one ton charge.

The kettle is kept boiling until saponification is, in the main, complete. This requires approximately four hours. Salt is then added, allowed to dissolve, and the boiling continued until the soap has separated. The steam is shut off and the boil is allowed to settle. It is preferable that the settling should continue overnight. Lyes settle to the bottom of the kettle and the soap and unsaponified fat float on the top. The lyes are referred to as "spent lyes".

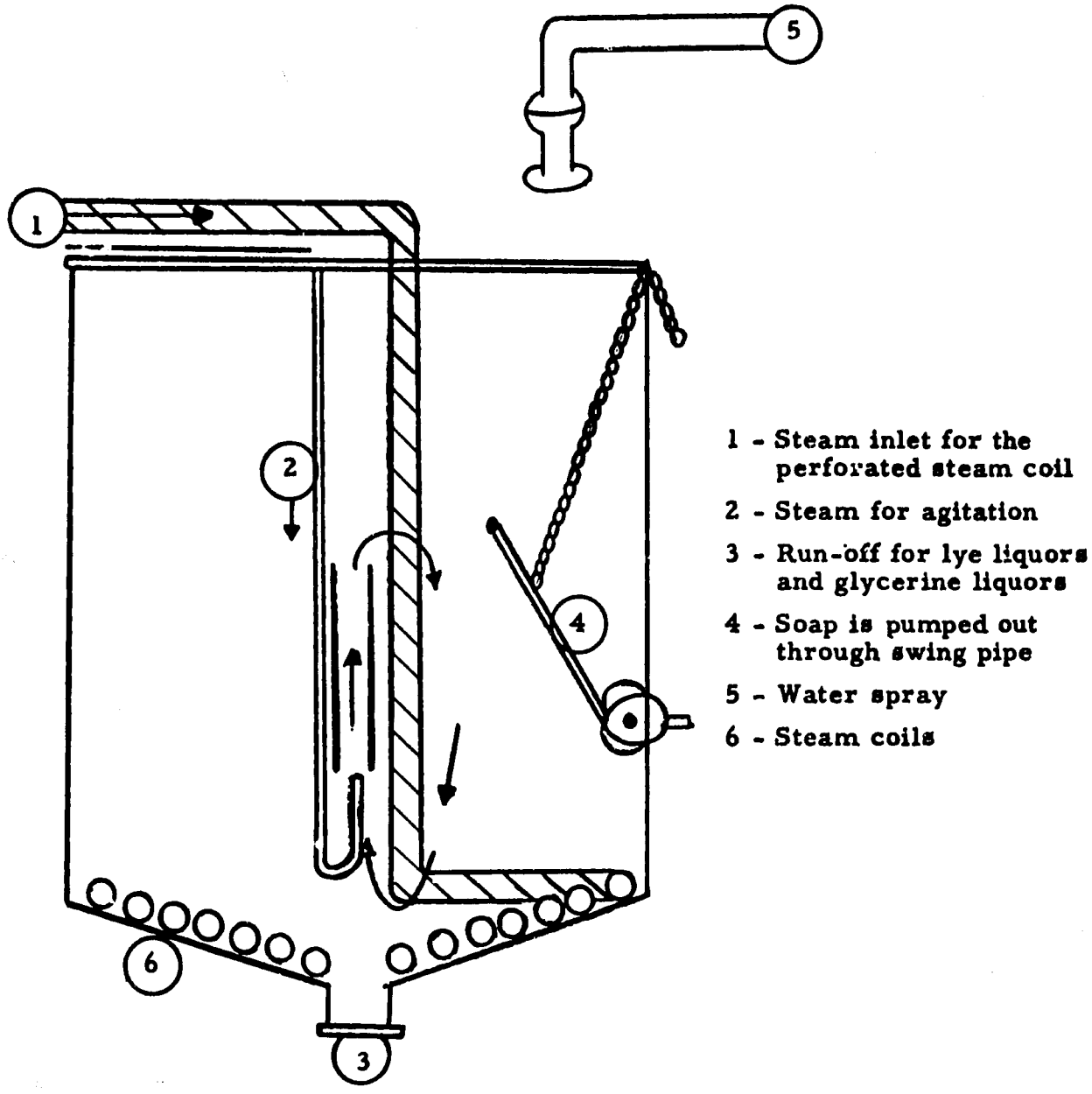

Figure 1 - Soap Kettle

Operation Number 2L - Second Brine Change

After the soap kettle has settled, the next operation is to drain off the spent lyes through a valve at the bottom of the kettle. Steam is again admitted to the kettle through the coil and kept open until the soap boils vigorously. Water is sprayed on the soap as the boiling continues. This thins the soap to the condition referred to by soap makers as "closed". Caustic soda lye is again added to the kettle in the same manner as was described under the first salt change. After the lye has been added, the procedure of salting out or graining the kettle follows that which was described under the first brine change. The kettle is again allowed to settle overnight.

Operation Number 3L - The Strong Change

This change serves to wash out the excess salt which is present in the soap after the first two brine changes. If rosin is to be added to the soap, it should be done at this point. The first step in this change is to drain off the spent lyes. The soap is again boiled and lye and water are again added. The kettle is allowed to settle overnight. Lyes obtained from this change are termed "half-spent lyes", and are stored until required for a subsequent first brine change.

Operation Number 4L - The Finish

After the kettle has settled and the lyes have been drawn off, there are usually two layers of soap of different appearance and fatty acid content. The "neat" or settled soap is the upper layer. The lower layer is a softer, darker soap which is called "nigre".

The aim of the finish operation on the kettle of soap is to obtain the greatest possible yield of neat base soap and to obtain a quantity of nigre which is neither too large nor too small. It is advisable, when possible, to dispose of the nigres by boiling them into a darker grade of soap rather than follow a practice of continued boiling of soap over the same nigre. The neat soap is pumped away from the kettle by means of a swing pipe.

This finish operation requires several days because the settling must be very thorough. For the whole cycle of kettle operations, about one week is customary.

Operation Number 5L - Crutching and Filling

When the kettle of full-boiled settled soap is pumped out, the neat soap is run either directly to a crutcher or preferably to a heated and insulated storage tank. If a storage tank is used it should be large enough to accept the whole kettle charge. The crutcher is the piece of equipment in which fillers, color, or perfume are added to the liquid neat soap. The crutcher operation requires only ten to fifteen minutes. (A typical crutcher is shown in figure 2.) The soap should be from 140 to 150 degrees Farenheit for best working in the crutcher.

Operation Number 6L - Cooling Frames

The soap is drained from the crutcher into the frames. The frame is usually 13" wide x 56" long x 41" high, and when filled, will hold from 1000 to 1200 pounds of soap. The frame base is a four-wheeled dolly which facilitates moving the soap for subsequent processing. Framed soap usually requires from 3 to 5 days to cool and solidify. When the block has

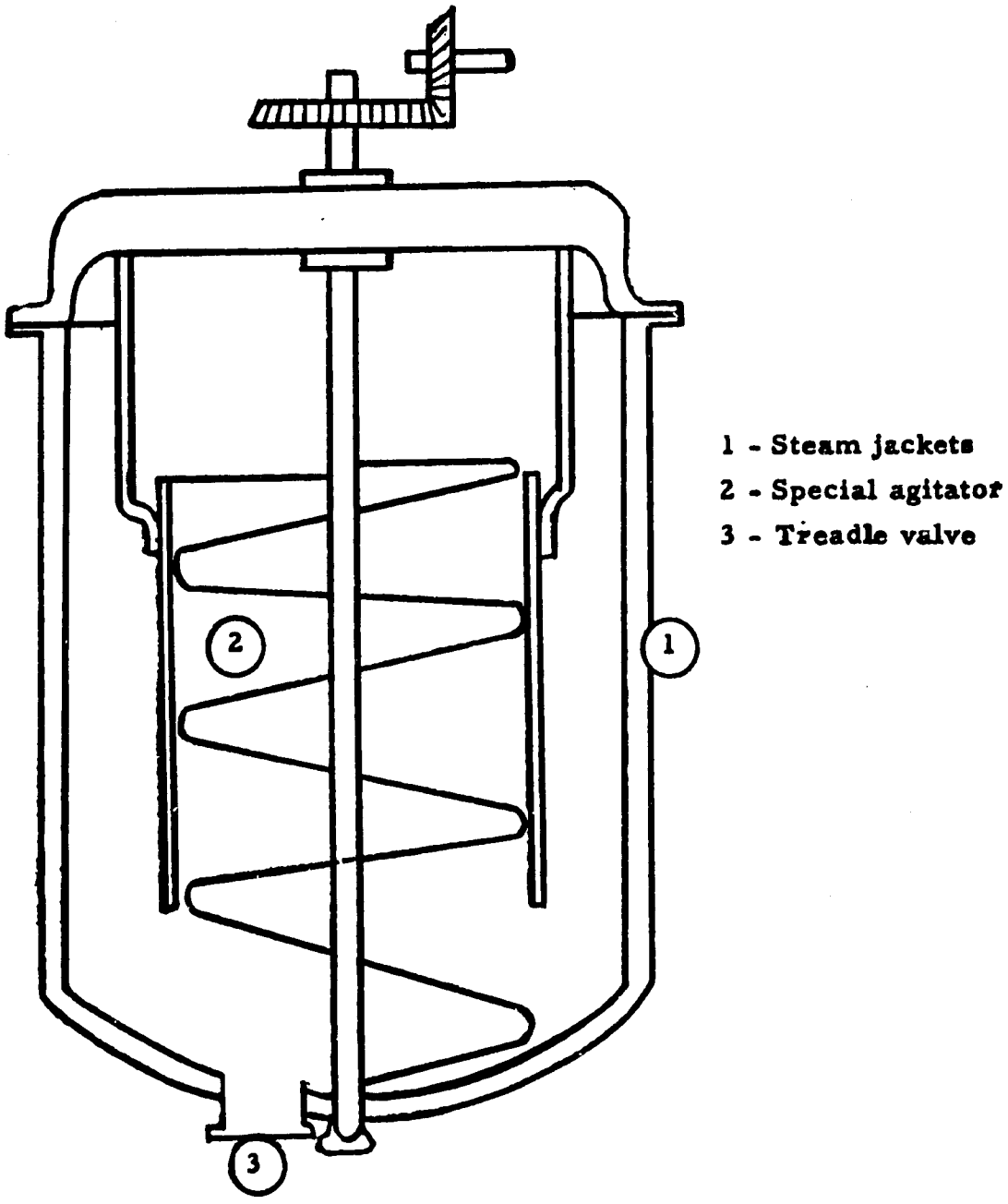

Figure 2 - Crutcher

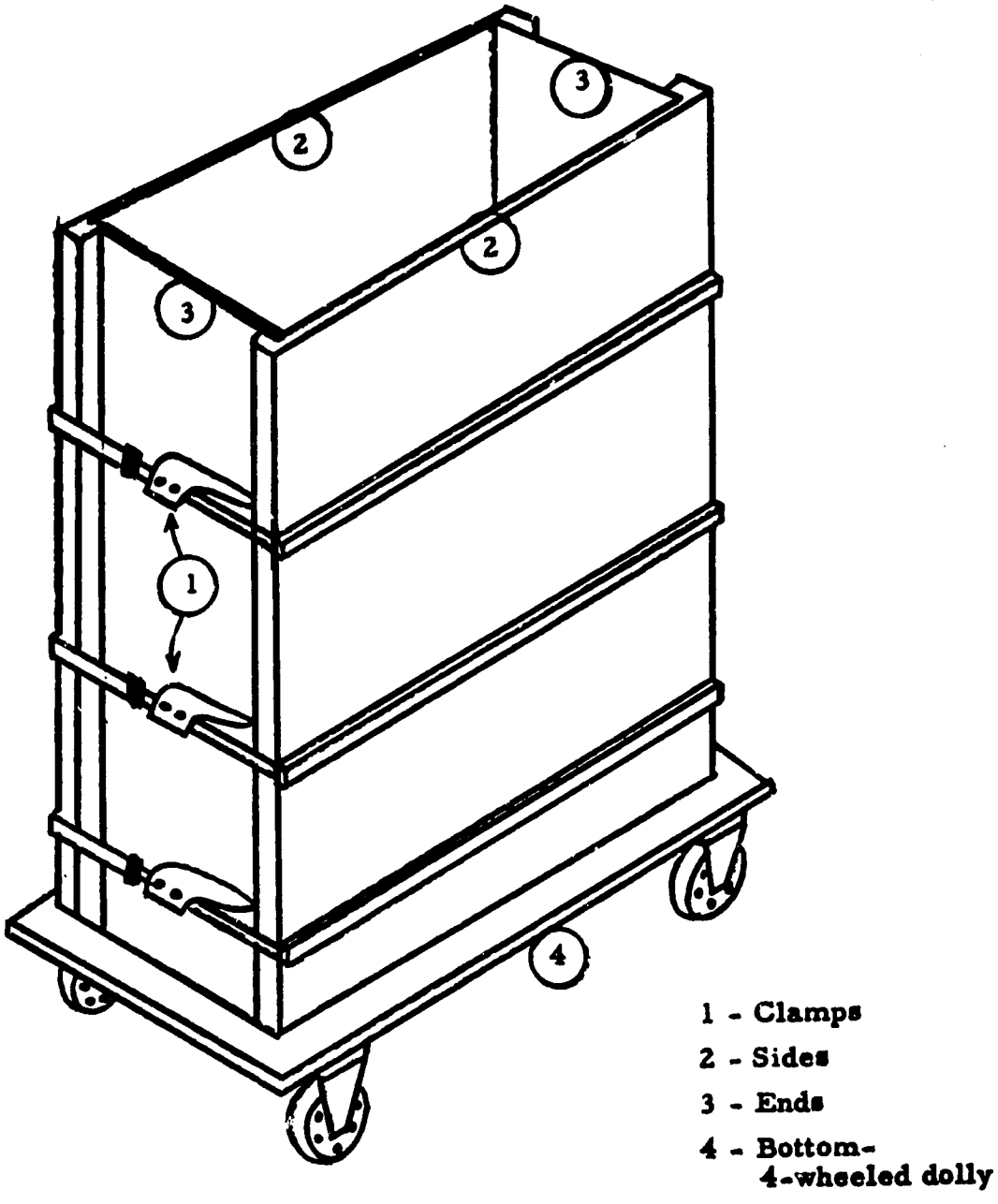

Figure 3 - Frame

solidified, the frame sides are stripped and the block cleaned preparatory to slabbing. (Figure 3 shows a typical frame.)

Operation Number 7L - Slabbing and Cutting

Slabbing reduces the block of soap to slabs and cutting reduces it to bars. The block of soap is wheeled on the frame dolly into position under the slabber. This machine may be either power or hand operated. The dolly wheels are blocked to prevent movement of the block during the operation. The slabbing is performed by pulling a series of taut piano wires, mounted in a strong angle iron frame, through the solid block of soap. The slabs are then placed on a cutting table (one at a time) which consists of two frames equipped with taut wires spaced at the correct distance to produce a cake of the desired size. The first frame of wires cuts the slab into bars. The second frame has wires at a 90 degree angle to the wires of the first frame and cuts the bars into cakes.

Operation Number 8L - Drying

The cakes of laundry soap are separated and stacked in racks to air dry for two days or more.

Operation Number 9L - Packing

The cakes are packed in cartons and are ready for storage or shipping.

OPERATIONS REQUIRED TO MAKE MILLED TOILET SOAP

The production of milled soap is comparable to the laundry soap process as described up to this point. The base soap

must be full-boiled and settled to assure best results and the preferred base soap is one derived from a mixture of tallow and coconut oil.

When the base soap in the frame has cooled sufficiently (see Operation Number 6), the frame is stripped from the block. In the slabbing and cutting area of the plant, the block is first slabbed, then cut into long bars. These bars are placed on racks to permit further air drying since additional drying is usually necessary prior to the milling cycle.

Operation Number 1M

The long bars of base soap are ready for processing if their moisture content falls between 12 and 15 per cent. The bars are removed from the drying racks and moved to the chipper. (See figure 4.) The chipper is the revolving drum and blade type of machine and the bars of base soap are manually fed into the hopper. The chipping operation places the soap in a form that is workable for following operations.

The chips are spread over drying frames and conditioned further by air drying, and made up into batches of 200 or 300 pounds each.

Operation Number 2M

The batch of soap chips is next moved to an amalgamator. This is a blending-mixing machine. It is equipped with strong mixing blades and serves to thoroughly disperse the additives throughout the batch of soap chips.

The additives can be in the form of perfume, coloring substance, inert material, or medicinal matter. The time

LAYOUT FOR MILLING OPERATIONS

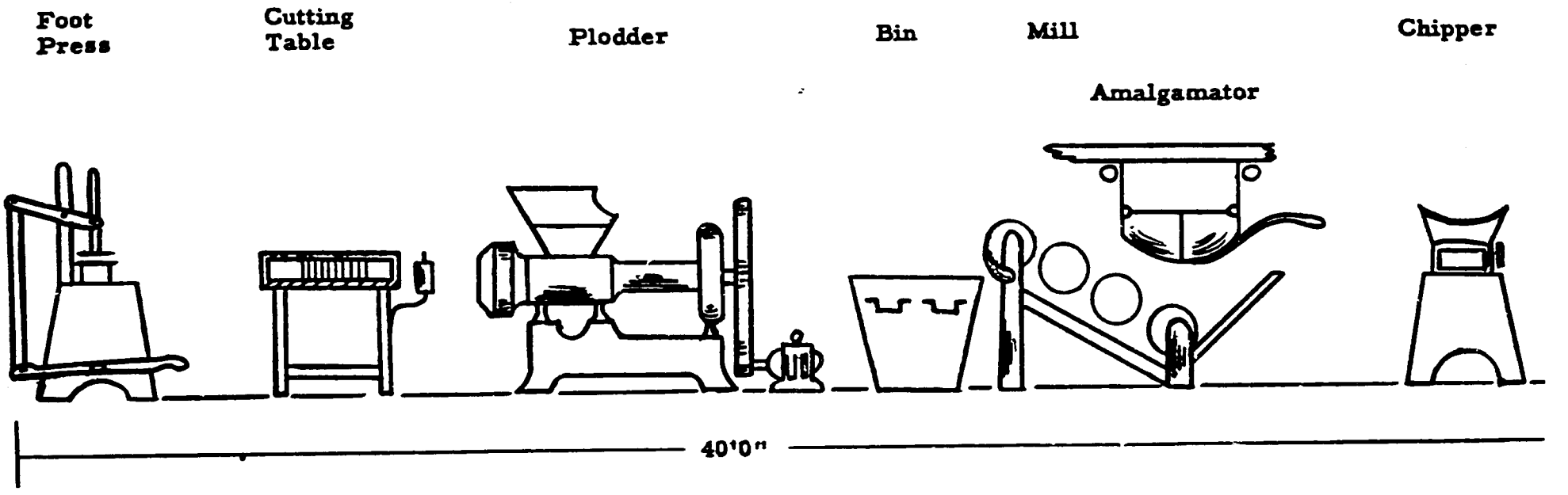

Scale: 1/4" = 1'0"

Figure 4

required to thoroughly mix a batch will vary from ten to fifteen minutes. The amalgamator serves its purpose best when located above the mill. This readily adapts its drop door feature to gravity feed of the chips.

Operation Number 3M

The batch of mixed chips in the amalgamator is delivered to the mill. A granite roll mill is recommended for small volume plants such as suggested by this report. Water cooled steel roll mills are available for high volume plants.

The mill usually consists of four rolls mounted in a heavy frame on an upward incline. The standard granite roll is about 18 inches in diameter by 30 inches long. A four-roll, granite mill will weight about four tons.

Chip soap is fed to the rolls through a hopper. Each upward roll revolves somewhat faster than the previous one causing the sheet of soap to be taken to the faster moving roll. The last roll has a comb and knife attachment that strips the soap sheet off the roll and cuts it into ribbons about 3/4 inch wide.

To assure a thoroughly milled product, the ribbons should be collected in a suitable container and returned to the feed hopper of the mill. This permits a repeat of the milling operation and assures a well milled soap. Large volume plants would use tandem mills. However, the repeat cycle with single mill is the most economical arrangement for a small volume plant.

Operation Number 4M

The soap ribbons produced by the final milling cycle are moved directly to the feed hopper of a Finish Plodder. The plodder is

a screw-type extruder. The material is placed in a feed hopper and the revolving screw forces into a compression chamber. A nozzle die plate mounted on the end of the compression chamber determines the cross sectional shape of the extruded bar of soap. The cylinder of the plodder is water jacketed to dissipate the heat generated in the compression chamber. Metering the flow of cooling water will maintain the temperature of the soap at the desired temperature for this operation -- 115 degrees Fahrenheit. As the soap emerges at the nozzle, heat supplied by a gas flame or electrical strip heater is applied to the bar. This heat polishes the bar of soap as fast as it emerges from the nozzle.

For production geared to an output of two tons per week, one four-inch capacity plodder should be sufficient.

Operation Number 5M

The bar of soap emerges from the Finish Plodder and passes through the cutting table. The bar is cut to an exact length and is then pushed through a series of taut piano wires. These wires cut the bar into rough cakes. The spacing of the cutting wires is an important factor since it determines the size of the final cake. Keeping the cutting table and cutting wires clean will assure production of unmarked cakes of uniform weight -- ready for the pressing operation.

Operation Number 6M

Most milled soaps are pressed by automatic or semi-automatic equipment. When the volume of product is small, the use of foot operated presses is recommended. Experienced foot press operators can press 75 gross per day.

The critical factors in the pressing operation are found in the alignment and cleanliness of the dies. The condition of the cake also determines the success of the pressing operation. A cake of soap that is too soft or too dry will not press properly.

Following the pressing operation, the cakes should be spread on racks and allowed to air dry until a slight surface skin develops. This skin will preserve the quality of finish during the subsequent operations. However, it is well to warn that too much drying at this point in the process would result in weight losses by the cake.

Operation Number 7M

The final operation in the process of making milled toilet soap is wrapping and packaging. Hand or semi-automatic wrapping is recommended for low volume production. The soap cake should be wrapped soon after the pressing operation. A layer of waxed paper between the cake and outside wrapper will avoid moisture losses and consequent weight changes. When the wrapping is completed, the cakes are packed in suitable cartons and are then ready for shipment or stock.

EQUIPMENT REQUIREMENTS

The foregoing portions of this report describe the procedures and equipment used in making laundry and milled soap by the boiled soap process. Only the raw materials or additives will be changed for certain operations. The equipment is therefore adaptable to the making of a variety of soaps by formulation. Generally speaking, we have endeavored to hold investment costs to a minimum while manpower requirements were increased. This line of thinking was strongly influenced by the low labor rates prevailing in the areas under consideration.

The following equipment is suggested:

Item	Estimated Cost	Number Required	Total Cost
1. Boiler and Auxiliaries	$10,000	1	$10,000
2. Storage Tanks (8' diameter x 6'deep - 2256 gallon capacity)	400	5	2,000
3. Soap Kettles (10' diameter x 6' deep - 3522 gallon capacity)	700	3	2,100
4. Crutcher (1500 pounds capacity)	1,200	1	1,200
5. Frames and Frame Dollies (1000 to 1200 pounds capacity)	150	12	1,800
6. Slabbing and Cutting Frame	500	1	500
7. Drying Racks and Trays	1,000	1 lot	1,000
8. Miscellaneous Equipment (Material Bins, Hoists, Shovels, Paddles, Laboratory testing equipment)	3,500	1 lot	3,500
9. Pumps (Centrifugal type)	250	3	750
10. Chipper, complete with motor	900	1	900
11. Amalgamator, 300 pounds maximum	2,000	1	2,000
12. Mill, Granite Roll, 4 stage	6,000	1	6,000
13. Plodder, 4 inch screw	1,800	1	1,800
14. Cutting Table	150	1	150
15. Foot Presses, die equipped	350	2	700
16. Office Equipment	1,000	1 lot	1,000
	Total Equipment Cost		$35,400

MANPOWER REQUIREMENTS

Knowing what process will be used and the equipment requirements for that process enables estimation of the total man hours required to produce the two tons of milled and one ton of laundry soap per week. As previously stated, the recovery of glycerine is disregarded due to the prohibitive cost of the necessary equipment.

A suggested labor distribution for the plant is:

Job Title	Combinations	Direct	Indirect
1. Kettle Man	Combined Operation	3	
2. Crutcher Man		1	
3. Framer	Combined Operation	1	
4. Slabber and Cutter		1	
5. Drying Room Material Handlers		2	
6. Chipper	Cooperative Operation	1	
7. Amalgamator and Mill Operator		1	
8. Finish Plodder		1	
9. Cutting Table Operator		1	
10. Foot Press Operator	Combined Operation	1	
11. Wrapper and Packer		1	
12. Foreman			1
13. Office			2
14. Boiler Operator			1
15. Maintenance			2
16. Janitor			1
Total Manpower		14	7

BUILDING AND PLANT LAYOUT

The next problem encountered in preparing this report is to determine the spatial requirements for all operations. Sufficient floor space is provided to permit free and unobstructed movement by the operators.

The ideal soap plant layout is generally considered to be one in which the sequence of operations always moves the product in the same direction. The direction is sometimes downward from a higher to a lower level -- thus affording the use of

gravity in place of expensive pumping. To accomplish this and still not use a multi-story building, it is necessary to elevate some of the equipment and provide catwalks and platforms to serve as the working surface. Equipment should be located in the center of the building where the roof height is maximum. In the interests of economy, a modified "Quonset-type" steel building is adequate.

The cost of erecting a building of this type and installing the necessary wiring, plumbing, platforms, catwalks, and allied services will be about $3.50 per square foot. A building 40 feet by 100 feet to accommodate the soap making operation is recommended. The 4,000 square foot building would cost approximately $14,000.

A suggested layout for the plant is shown in figure 5.

OVERHEAD

The amount of overhead that must be charged to each direct hour of labor must be determined. This consists of depreciation, indirect labor cost, utilities, and supplies.

1. Indirect Labor Charge is the total weekly pay of all the indirect labor. There are seven indirect workers working 40 hours per week at a rate of $.30 per hour. This gives a total indirect labor cost of 7 x 40 x $.30 or $84.00 per week.

2. Utilities and Supplies include the cost of light, heat, plant supplies, and office supplies for a one-week period. An estimate of $150 per week is required to cover the cost of these items.

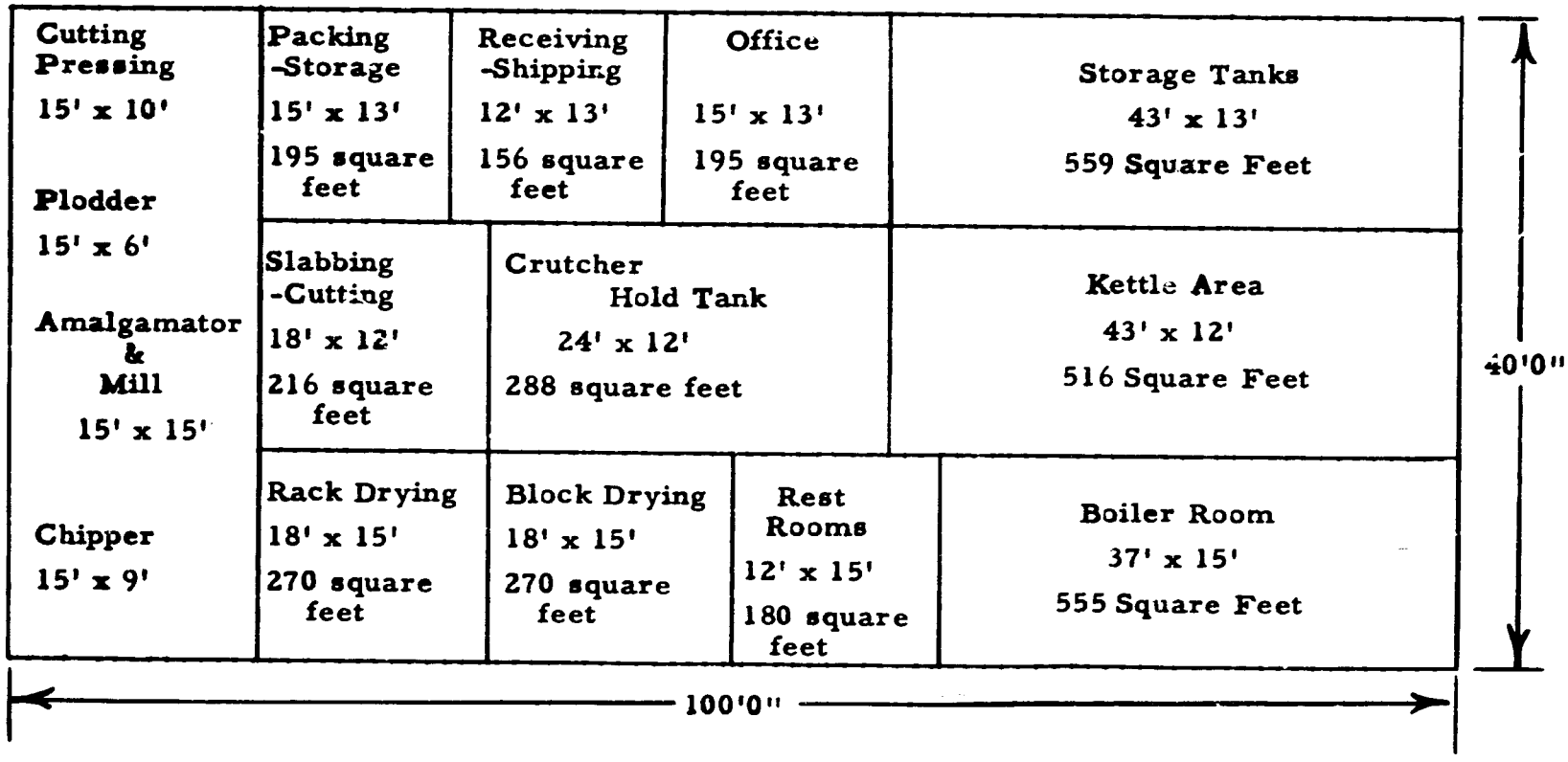

PLANT LAYOUT

Figure 5

Scale: 1" = 12'0"

Area = 4000 square feet.

3. Depreciation is charged on all capital equipment. The following schedule for depreciation is suggested:

Item	Original Cost	Number of Years	Yearly Depreciation
1. Building	14,000	20	700
2. Boiler and Auxiliaries	10,000	20	500
3. Storage Tanks (5)	2,000	10	200
4. Soap Kettles (3)	2,100	10	210
5. Crutcher	1,200	20	60
6. Frames & Frame dollies	1,800	20	90
7. Slabbing-Cutting frame	500	20	25
8. Drying Racks and trays	1,000	20	50
9. Miscellaneous equipment	3,500	5	700
10. Pumps (3)	750	5	150
11. Chipper	900	20	45
12. Amalgamator	2,000	20	100
13. Granite Roll Mill	6,000	10	600
14. Finish Plodder	1,800	20	90
15. Cutting Table	150	10	15
16. Foot Press (2)	700	10	70
17. Office equipment	1,000	5	200
Total Yearly Depreciation	$49,400		$3,805

4. Summation of Overhead Costs

Weekly Depreciation	$ 73.17
Weekly Indirect Labor	84.00
Utilities per week	130.00
Office supplies per week	20.00
Total Weekly Overhead Cost	$307.17

5. Calculated Overhead Rate

The overhead rate is based on the number of direct labor hours. All labor, both direct and indirect, is figured at $.30 per hour. The rate is determined by the following computation:

$$\text{Overhead rate} = \frac{\text{Total Weekly Overhead Cost}}{\text{Total Weekly Direct Labor Hours}}$$

$$= \frac{\$307.17 \text{ per week}}{14 \text{ men} \times 8 \text{ hours/day} \times 5 \text{ days/week}}$$

$$= \frac{\$307.17 \text{ per week}}{560 \text{ man hours/week}} = \$.55 \text{ per man hour}$$

6. The Unit Cost is now determined. Consider the unit as one pound of soap for cost purposes.

Laundry Soap production is 2000 pounds per week
Milled Soap production is 4000 pounds per week

It requires very close to twice as many man hours to produce one pound of milled soap as one pound of laundry soap. Therefore, 2/3 of the 560 direct labor hours per week is expended for milled soap and 1/3 of the direct labor is used to produce laundry soap.

The unit cost is determined algebraically in the following manner:

Let X = man hours required to make 1 pound of laundry soap
$2X$ = man hours required to make 1 pound of milled soap

Then: $2000X$ = man hours required to make 1 ton of laundry soap
$4000 \cdot 2X$ = man hours required to make 2 tons of milled soap

Or 10000 X = total man hours per week - direct labor

10000 X = 560

X = .056 man hours per pound laundry soap

2X = .112 man hours per pound milled soap

	Laundry Soap	Milled Soap
Labor: .056 hours/pound x .30 $/hour	$.0168	
.112 hours/pound x .30 $/hour		$.0336
Materials: $ 96.57 per 2000 pounds	.0483	
$232.96 per 4000 pounds		.0582
Overhead: Rate x hours/pound		
$.55/hour x .056	.0308	
$.55/hour x .112		.0616
Unit Cost per pound of soap	$.0959	$.1534

OPERATING CAPITAL

Having determined the unit cost of the product, the factor to be determined now is the amount of operating capital required. This estimate is based on the following items:

Item	Laundry	Milled	Total
Raw Material Inventory 4 weeks' production	386.28	931.84	1318.12
In-process inventory 1 week's production	96.57	232.96	329.53
Finished goods inventory 4 weeks' production	767.20	2454.40	3221.60
Accounts receivable 4 weeks' production	767.20	2454.40	3221.60
Expenses of 4 weeks' production Wages			1008.00
Utilities			600.00
Total Required Operating Capital			$9698.85

CONCLUSIONS

We have specified a soap making plant with a capacity of three tons production per week. The limiting factor is the number of kettles used. Output could be materially increased by merely increasing the number of soap kettles since the remaining equipment is not 100% utilized.

The cost picture is good. Labor represents 18 per cent of unit cost, overhead is 32 per cent of cost, and materials represent 50 per cent of unit cost. A labor versus material cost ratio shows the material cost to be almost three times the labor cost. This ratio is reasonable since it merely reflects the low labor rate of $.30 per hour.

The cost of laundry soap produced at $.10 per pound compares favorably with the milled soap at $.15 per pound.

Tabulations summarizing the financial requirements, income, and expenses are shown in Charts A and B.

SOAP -- INCOME AND EXPENSES

Sales Income:		
_____ pounds Laundry Soap @ $	$xxx.xx	
_____ pounds Milled Toilet Soap @ $	xxx.xx	
Total Sales Income		$xxx.xx
Cost of Manufacturing:		
_____ pounds Laundry Soap @ $.0959	xxx.xx	
Labor .0168		
Material .0483		
Overhead .0308		
_____ pounds Milled Toilet Soap @ $.1534	xxx.xx	
Labor .0336		
Material .0582		
Overhead .0616		
Total Product Cost		xxx.xx
Sales Expenses:		
Advertising		
Freight		
Commission		
Others		
Total Sales Expense		
Total Cost of Sales		
Profit		
Sales Expenses and Profits		

Chart A

ANNUAL FINANCIAL SUMMARY
For
Manufacture of Laundry and Milled Toilet Soap

Current Assets		
Cash	_____	_____
Accounts Receivable	3221.60	
Inventories		
Raw Material	1318.12	
In-Process	329.53	
Finished Goods	3221.60	
Fixed Assets		
Building	14000.00	
Depreciation per year		700.00
Office Equipment	1000.00	
Depreciation per year		200.00
Production Equipment (Durable)	44150.00	
Depreciation per year		2055.00
Production Equipment (Non-durable)	4250.00	
Depreciation per year		850.00
Operating Accounts		
Income		
Sales - See Chart A	_____	
Expenses		
Purchases		
Office Supplies	1040.00	
Raw Materials	17135.56	
Wages		
Utilities	6760.00	
Sales Expense - See Chart A	_____	
General Depreciation (Exclude Bldg.)	3105.00	
Others	_____	

Chart B

Granite Roll Soap Mill

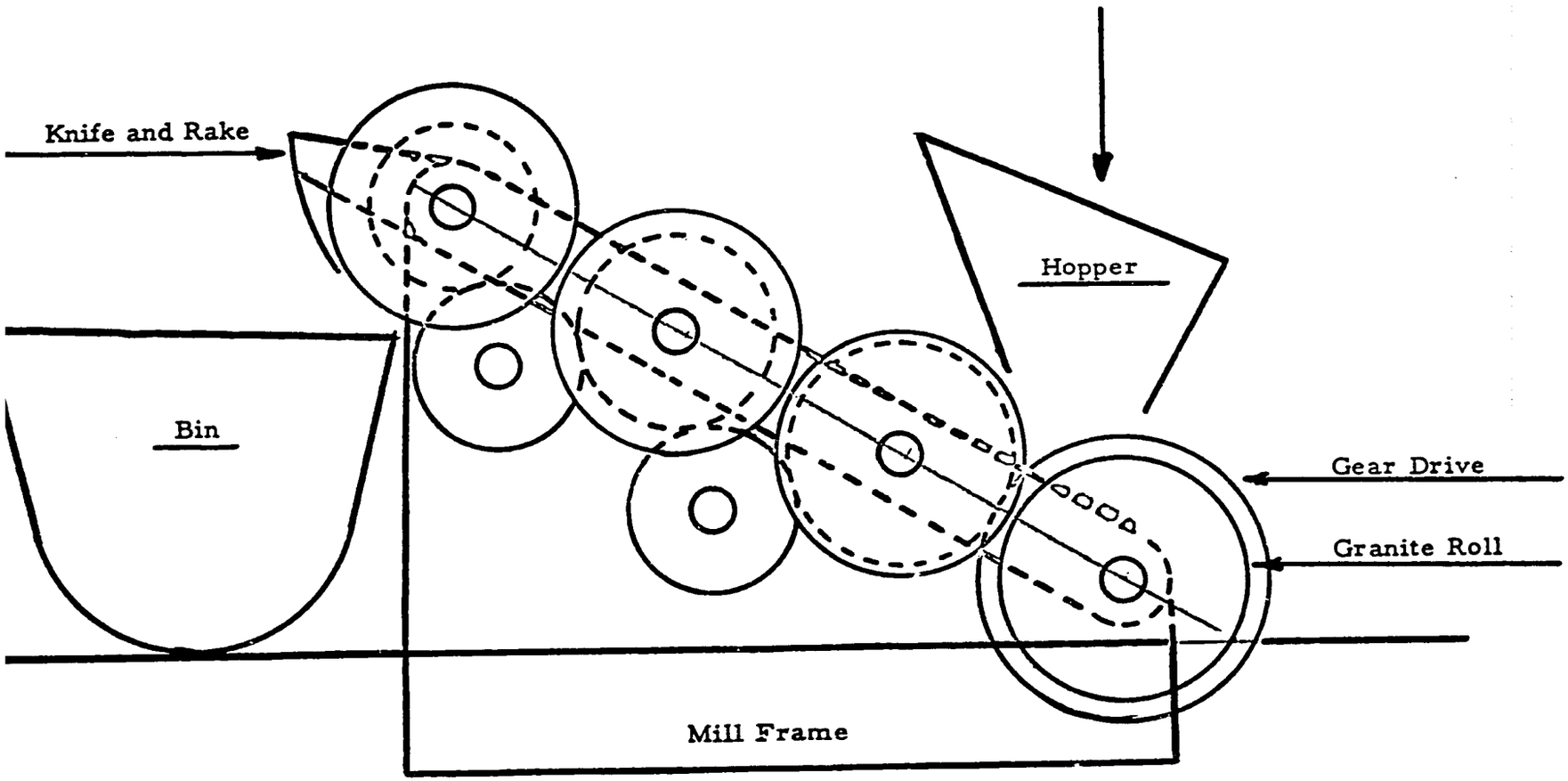

Figure 6

Approximate scale: 1" = 1'0"

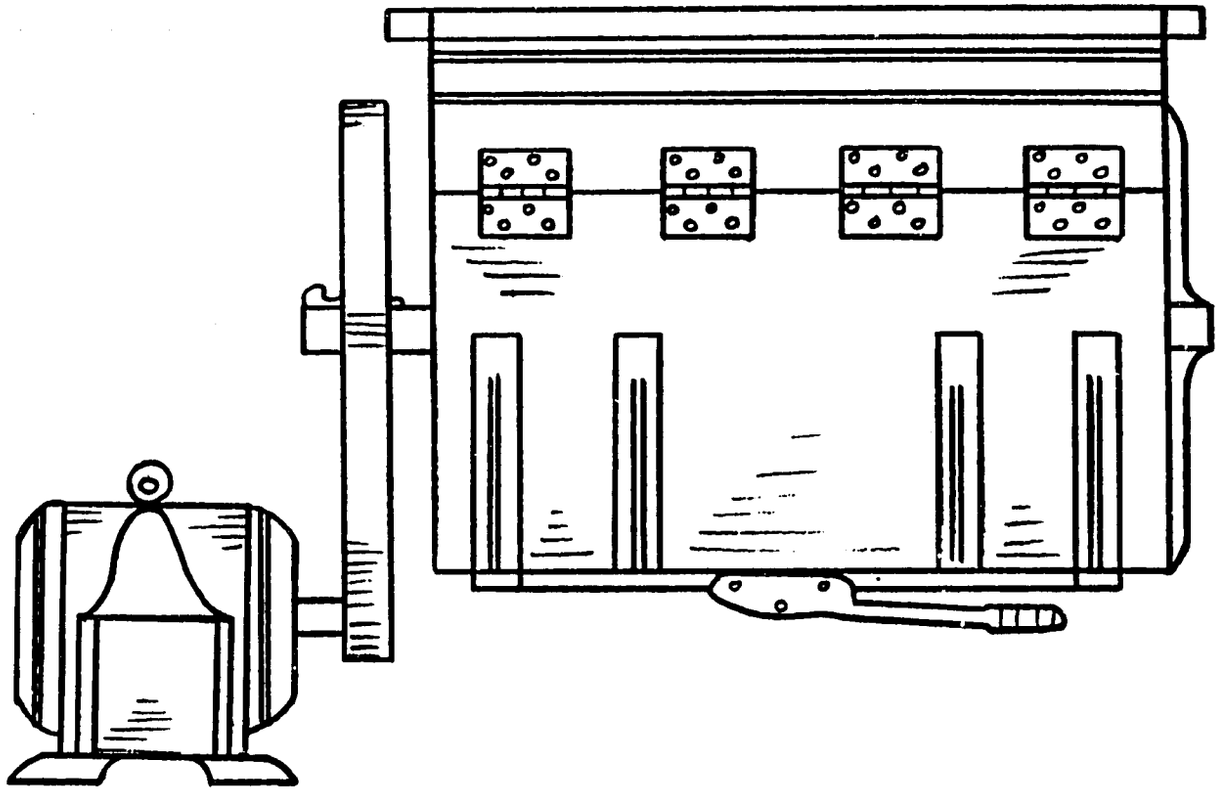

Figure 7 - Amalgamator

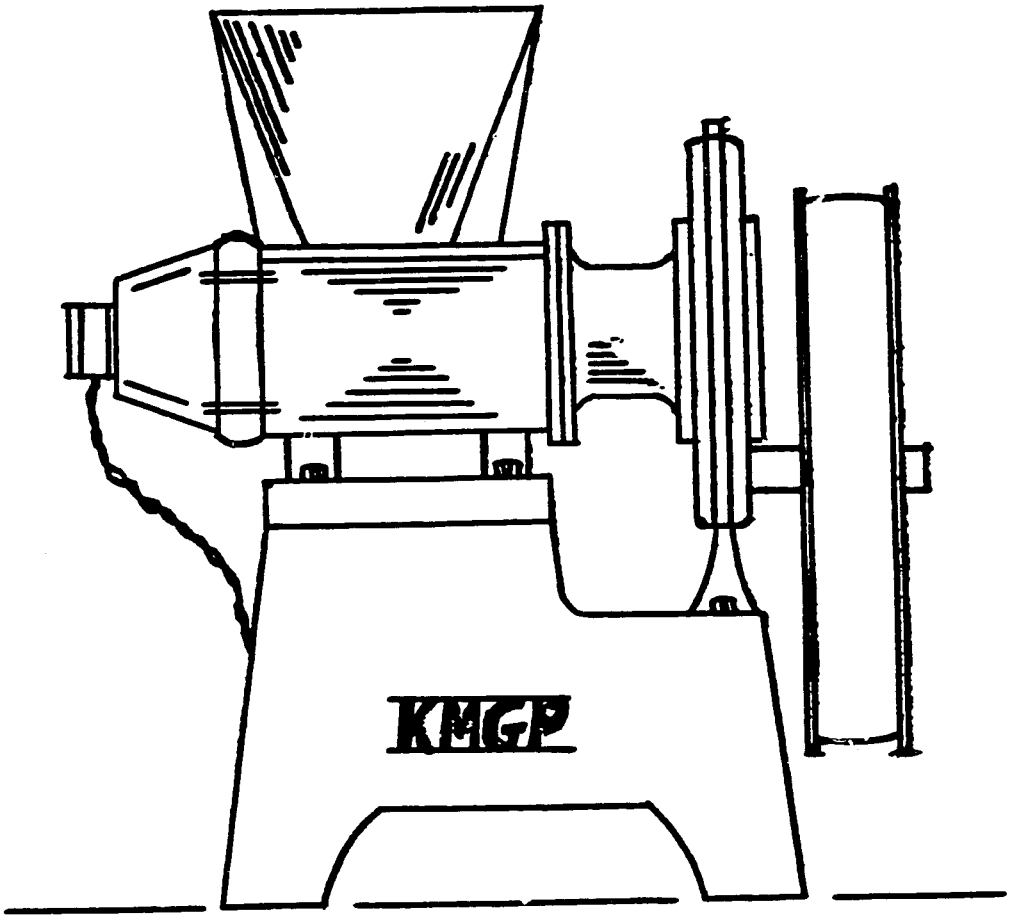

Soap Plodder

Figure 8 **Approx. Scale: 1" = 1'0"**

APPENDIX

I Engineering and Consulting Services

II Suppliers of Soap Making Machinery

I. Soap Production -- Engineering and Consulting Services

1.	Groak Engineering Co. 1053 West 35th Street Chicago 9, Illinois	Design and Contracting Service to Soap Industry
2.	Houchin Machinery Co. 169 Van Winkle Avenue Hawthorne, New Jersey	Soap Equipment -- Design and Manufacture
3.	Consolidated Products Co., Inc. 156 Observer Highway Hoboken, New Jersey	Supplier of Complete Line of Used Soap Making Equipment
4.	Wurster & Sanger, Inc. 5201 Kenwood Avenue Chicago, Illinois	Contracting and Consulting Engineers to Soap Industry

II. Soap Production -- Soap Making Machinery Suppliers

1.	Newman Tallow & Soap Machinery Company 1053 West 35th Street Chicago 9, Illinois	Soap Machinery -- New and Used -- All types
2.	Proctor-Schwartz, Inc. 700 Tabor Road Philadelphia 20, Pennsylvania	Manufacturer of Dryers and Auxiliaries Chippers
3.	Package Machinery Company Putnam Building Springfield 7, Massachusetts	Semi-Automatic Packaging Equipment
4.	Huber Machine Company 263 46th Street Brooklyn, New York	Soap dies for foot presses Slabbers Frames
5.	Houchin Machinery Co. 169 Van Winkle Avenue Hawthorne, New Jersey	Dies Slabbers Frames
6.	Littleford Brothers 400 East Pearl Avenue Cincinnati, Ohio	Steel Soapmakers Frames

7.	Dean Brothers Pumps, Inc. 323 West 10th Indianapolis, Indiana	Soap Pumps
8.	Goulds Pump, Inc. 75 Fall Road Seneca Falls, New York	Soap Pumps
9.	R. A. Jones and Company E. 15th & Wheeler Streets Covington, Kentucky	Soap Makers Presses
10.	J. M. Lehmann Co., Inc. 552 New York Avenue Lyndhurst, New Jersey	Roller Mills Plodders Amalgamators
11.	Stein Equipment Company 109 Eighth Street Brooklyn, New York	Foot Presses Slabbers Cutting Tables
12.	Houchin Machinery Co. 169 Van Winkle Avenue Hawthorne, New Jersey	Plodders
13.	Buflovak Equipment Div. Blaw-Knox Company 43 Winchester Avenue Buffalo, New York	Crutchers Kettles Mixers