83.3
M592

F-4

PLANT REQUIREMENTS FOR MANUFACTURE OF BUILDING HARDWARE

Reference Center
Room 1656 NS

TECHNICAL AIDS BRANCH

INTERNATIONAL COOPERATION ADMINISTRATION

Washington, D. C.

UNITED STATES OF AMERICA

REVISED
MAY 1959

FOREWORD

This manual is a revision of an earlier report of the same type issued in 1955. This revised version includes current costs of labor, machinery, equipment and supplies, as well as additional information relative to engineering, training, safety, markets, sales, financial and economic factors.

* * * * * * * *

This manual is designed to provide a general picture of the factors which must be considered in establishing and operating a small-scale factory of this type. It should prove useful in creating interest in the subject, and serve to give enough understanding of the related considerations to help government officials, other leaders and businessmen to determine whether the potential deserves more-detailed attention.

However, it is important to note that in most cases plans for the actual development and installation of a plant will require expert engineering and financial advice in order to meet specific local situations. For further information and assistance, readers should contact their local Productivity Center, Industrial Institute, Servicio, or United States Operations Mission.

Mention of the name of any firm, product, or process in this manual is not to be considered a recommendation or endorsement by the International Cooperation Administration, but merely a citation that is typical in its field.

* * * * * * * *

The original report was prepared by the Methods Engineering Council, Pittsburgh, Pennsylvania.

Technical information, as well as review, was provided by R. Poliakoff, Industrial Consultant, 126 Eleventh Avenue, New York 11, New York.

* * * * * * * *

This manual has been revised and rewritten by
George H. Andrews Engineering Associates, Inc.
411 Southern Building, Washington 5, D. C.

April 1959

TABLE OF CONTENTS

	Page
Introduction	1
General Assumptions	1
Product Specifications	2
Operations the Equipment Will Perform	2
Operations to Manufacture the Illustrated Products	6
Manufacturing Unit Used	9
Direct Materials	9
Supplies	9
Production Tools and Equipment	10
Dies Required	11
Other Tools and Equipment	11
Furniture and Fixtures	12
Direct Labor	12
Indirect Labor	12
Plant Layout	13
Plant Site	13
Building	13
Power	13
Fuel	13
Water	13
Truck	13
Depreciation	14
Manufacturing Overhead	14
Manufacturing Costs	15

	Page
Fixed Assets	15
Working Capital	15
Capital Requirements	15
Sales Price to Jobbers	16
Annual Sales Revenue	16
Sales	17
Recapitulation of Costs, Sales and Profits	17
Budget Control	18
Budget Control Accounts	18
Purchase Requisition	19
Voucher Check	20
Engineers	21
Training	22
Safety	23
Summary	24
Materials and Supplies	24
Market Factors	24
Export Markets	25
Marketing Problems	25
Economic Factors	26
Personnel	26
Laws and Regulations	26
Financial Factors	27
Financial Requirements of the Project	27
Short Term Bank Credits	27

	Page
Financial Plan	27
Glossary	28
Bibliography	29
Abbreviations	29
Padlock	30
Door Lock and Parts	31
Flat Corner	32
Inside Corner	32
T Plate	32
Mending Plate	33
Door Hinge	33
T Hinge	33
Safety Hinge Hasp	33
Die Casting Machine	34
Punch Press	35
Power Hacksaw	36
Pedestal Grinder	37
Power Shear	38
Bench Model Drill Press	39
Single Spindle Hand Screw Machine	40
Heat Treat Furnace	41
Schematic View of Plating Equipment	41
Rivet Spinner	42
Plant Layout	43

B U I L D I N G H A R D W A R E

INTRODUCTION

In the United States, building hardware production for doors is split into two categories. They are: (1) lockside of door; (2) hinge side of door and accessories.

The lockside group includes padlocks, door locks, and door knobs. The hinge group includes hinges, hasps, mending plates, and flat or angle corner brackets. Individual companies normally specialize in one of these categories. However, this manual covers both groups including the most common sizes of hardware and locks of the Ward type -- those where the key guides and slots are part of the casing.

To facilitate conversion to local figures and costs, columns headed "Actual" are included in the appropriate tables.

GENERAL ASSUMPTIONS

In order to make realistic estimates, certain assumptions are made. These are:

1. The costs of building, equipment, and material necessary are based on United States prices.

2. Labor costs used are the average labor costs for the industry and skill described, based on recently published figures of the United States Bureau of Labor Statistics.

3. All other costs, statistics, and figures are based on current United States prices.

4. Adequate heat, light, water, and electricity are available at the plant site.

5. Adequate transportation facilities will be available at the plant site.

6. The plant will operate 8 hours per day, 5 days per week, 50 weeks per year.

7. The following items cannot be estimated realistically:

   A. Land value
   B. Distribution methods and selling costs
   C. In-freight and out-freight
   D. Taxes

   While general estimates will be made of each of these items, for the purpose of completing cost estimates, adjustment should be made in accordance with actual local costs.

   In fact, all cost estimates contained in this manual should be adjusted to conform to local conditions.

8. Each machine will be set up and complete a week's run before die changes are made. Apart from slight adjustments and die changes, no setup time will be required and none will be allowed in the unit cost calculations.

PRODUCT SPECIFICATIONS

A realistic basis for the start of manufacturing would be to make one size of each item listed. Other sizes can be added by the purchase of additional dies as the immediate market is explored and specific needs are determined.

In order to minimize investment, the padlocks, doorlocks, and door knobs illustrated in Figures 1 and 2 are to be made of zinc alloy castings. These castings require very little additional machining as compared to products made by extrusion or other mechanical processes.

Hinges, hasps, and other accessories are to be manufactured from 14 gauge hot rolled steel. These items are shown in Figures 3 and 4.

Padlock shackles, hinge pins, doorknob shafts, and hasp staples are to be made of 3/8" round or square bright hard wire.

The necessary screws and coil springs are purchased.

OPERATIONS THE EQUIPMENT WILL PERFORM

This report includes detailed costs on several typical hardware items which could be produced in this plant. The equipment necessary to produce these items can be used for many other items. Therefore, the descriptions of the various operations will be general for each type of machine. The operations and equipment required for the typical hardware items selected are given later.

In a small plant of this type the operations requiring a high degree of skill are die setting, machine setup, and tool dressing. This work will be performed by two maintenance men. The machine operators will have to be only semi-skilled workers, although the majority of them should have a high degree of manual dexterity.

The following operation descriptions apply to most products made on these machines, although the number of operators required will vary.

Die Casting

The forming of low melting point metals by the die casting process is almost entirely a machine process. Metal is first melted in a separate furnace and then transferred to the holding pot of the die casting machine. The usual sequence in a die casting operation, starting with an open, empty mold, is:

1. The operator pushes the start button. The ejector pins are automatically withdrawn from the cavity, the cores move into place, and the die is closed and locked. The plunger then ejects a fixed amount of molten metal into the cavity and at the end of a preset time interval the plunger withdraws, the cores move out, the die opens, and ejector pins force the casting out of the die.

2. The operator then cleans and lubricates the die as necessary and pushes the starting button for another automatic cycle. The entire cycle requires only seconds to complete.

A die casting machine, as shown in Figure 5, requires an operator of sufficient skill to make minor adjustments to the machine and recognize obvious malfunctions. He usually has a helper with little skill to aid in material handling.

Trimming Flash and Finishing on Die Castings

There are varying amounts of flash on die castings at the parting line of the mold halves, at core openings, ejector pin locations, and where the metal enters the mold. Some of the flash can be easily broken off by hand but some of it must be trimmed off in a die on a punch press, see Figure 6. The parts are placed in the trimming die by hand and the press actuated by a foot pedal. After the press completes its stroke, the trimmed part is removed from the press and the trimmed flash brushed from the die.

The finishing is by hand filing using several grades of files to obtain a smooth surface. The parts are then ready for plating, assembly operations, or machine operations.

The trimming and finishing are performed by one operator with low skill.

Shear, Cut to Length, and Grind

The special shapes are cut to length on a power hacksaw, see Figure 7, as they are moved from the raw material storage to the forming operations. Burrs resulting from the sawing operation are ground off on a pedestal grinder, see Figure 8. The steel sheets are sheared to size on a power shear, see Figure 9, as they are moved from the raw material storage.

These operations are performed by two material handlers who have little or no skill.

Punch Press Operations

The operations performed by a punch press, Figure 6, depend on the dies used. They vary from a simple die where the part is positioned by hand and only a single operation is performed on it, to very complex dies where a strip of steel is fed automatically to the press and a part requiring five to seven operations is produced every stroke of the press. These complex dies are very expensive and, therefore, economical only for very high production. All of the parts discussed in this manual are made on relatively simple dies. This keeps the original investment cost low until the demand for a particular item can be determined.

Each punch press is operated by a worker with little skill.

Drill Presses

Both the floor model and the bench model, Figure 10, drill presses are "sensitive" drill presses. They are manually operated to perform operations such as drilling, tapping, and countersinking holes. On single-spindle, hand-fed machines, the operator moves one part at a time under the tool, lowers the tool to perform the operation, raises the spindle, and removes the part. The part is located in the correct position under the spindle by a simple jig or fixture.

Each drill press is operated by a worker with little skill.

Single Spindle Hand Screw Machine

On a screw machine, see Figure 11, the material is fed through the chuck which holds the material while it is being formed. Since many operations can be performed on this machine, it will be very useful in a plant of this type. It will turn diameters, cut off to length, face ends, drill holes, counterbore holes, tap holes, and the like.

On simple operations the machine can be operated by a worker with little skill.

Heat Treat Furnace

A heat treat furnace, see Figure 12, is an oven with sufficient heating capacity to produce temperatures up to 2,000°F. The temperature and treatment required depend on the analysis of the material being treated and the results desired.

Generally the parts to be treated are placed in the furnace after it has been heated to the desired temperature. The parts are left in the furnace for a definite length of time and then removed. They may be dipped in water, in oil, or left in the air to cool, depending on the physical characteristics desired in the finished parts.

The operator for the heat treating furnaces has low skill but must be very dependable, as lack of attention or failure to remove the parts at the proper time can ruin them.

Plating Equipment

Plating equipment consists of a number of tanks containing cleaning solutions, plating solutions, and rinsing solutions. The number of tanks and the order in which the parts enter them depends on the type of plating being done. A schematic view of the plating equipment in this plant is shown in Figure 13. The parts are contained in baskets which are moved from tank to tank by use of a hoist mounted on an overhead rail.

The operators of the plating equipment must have considerable knowledge of the plating process. They will set up and maintain the proper solutions in the tanks.

Rivet Spinning

Spinning a head on a pin or rivet by use of a special machine, see Figure 14. Shaped rolls, carried in a rapidly revolving holder, cause the metal to spread and assume the desired shape. Since the pressure applied on the pin can be controlled, it is not distorted and the joint remains flexible.

Assembly and Packing Operations

These operations take the completed individual parts and assemble and package them for delivery to the customers.

Fifteen operators with low skill but considerable manual dexterity are required for these operations.

OPERATIONS TO MANUFACTURE THE ILLUSTRATED PRODUCTS:

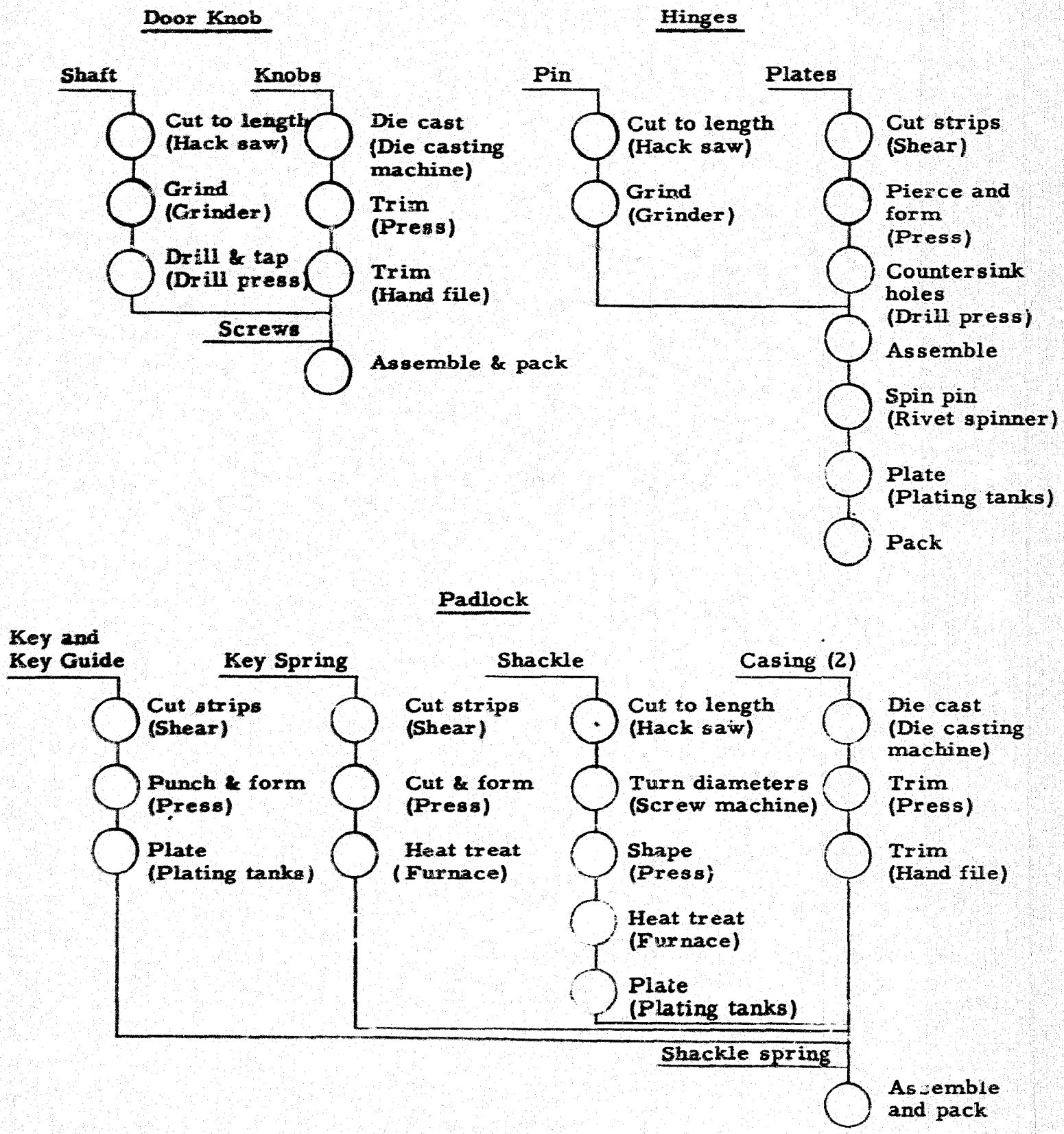

Door Lock

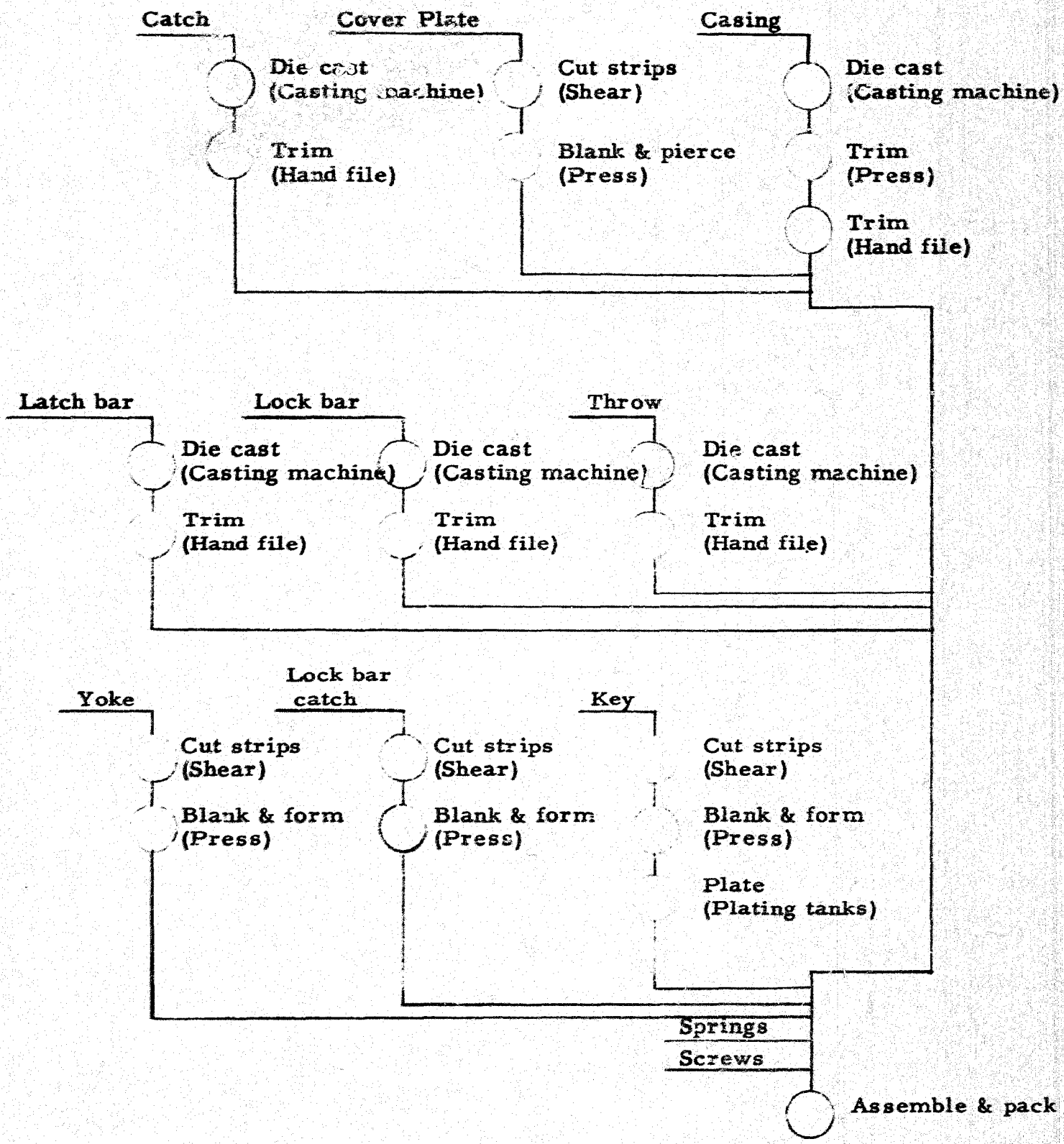
Catch
Cover Plate
Casing
Die cast (Casting machine)
Cut strips (Shear)
Die cast (Casting machine)
Trim (Hand file)
Blank & pierce (Press)
Trim (Press)
Trim (Hand file)
Latch bar
Lock bar
Throw
Die cast (Casting machine)
Die cast (Casting machine)
Die cast (Casting machine)
Trim (Hand file)
Trim (Hand file)
Trim (Hand file)
Yoke
Lock bar catch
Key
Cut strips (Shear)
Cut strips (Shear)
Cut strips (Shear)
Blank & form (Press)
Blank & form (Press)
Blank & form (Press)
Plate (Plating tanks)
Springs
Screws
Assemble & pack

Hasp

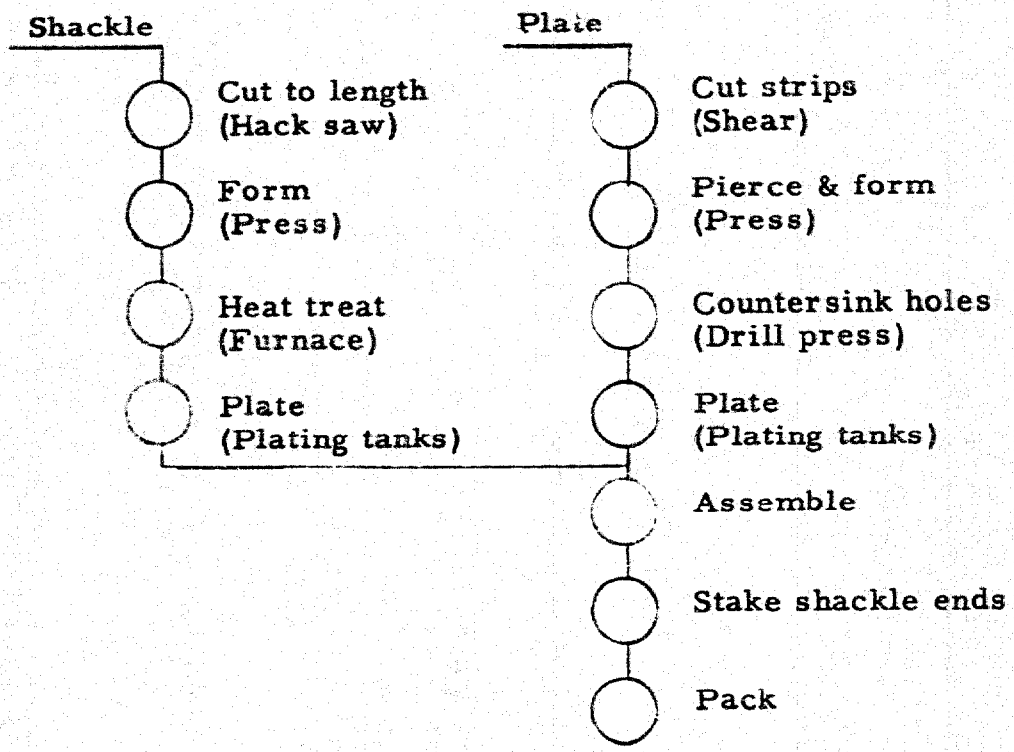

Mending Plates

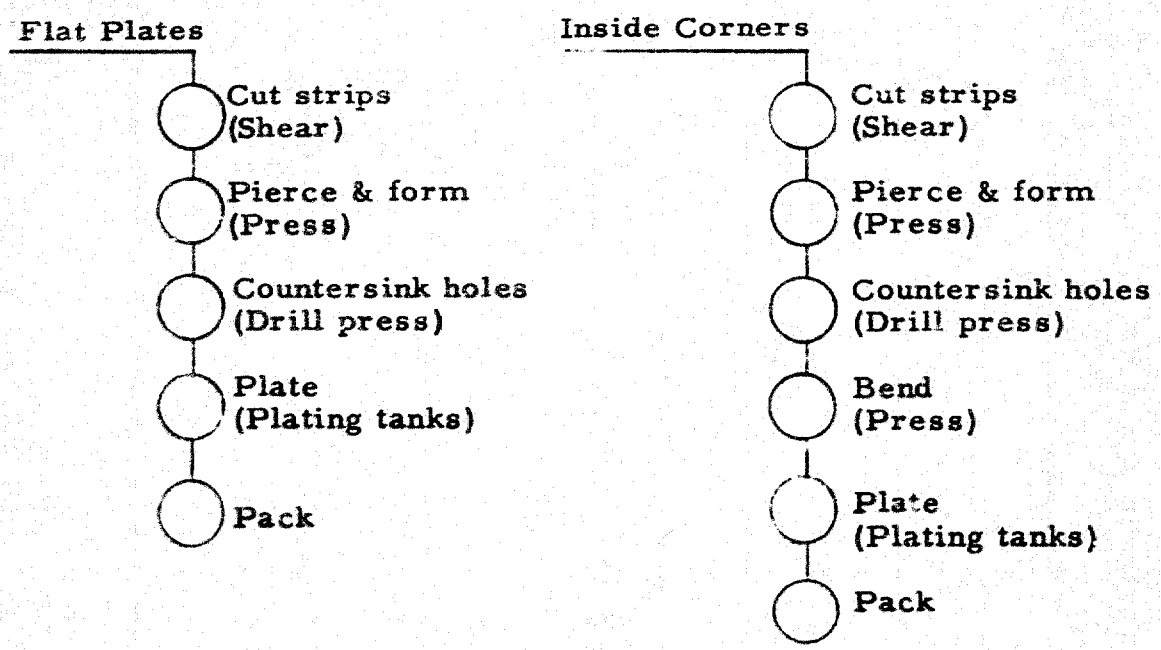

MANUFACTURING UNIT USED

Hardware items are sold to jobbers on a per dozen basis. Therefore, costs and production ratios are based on the use of the dozen as a unit. The following production ratios are based on full equipment utilization and corresponding necessary market demand.

Item	Dozen Per Day	Dozen Per Year	Actual Per Year
Padlocks	174	43,500	_____
Doorlocks	88	22,000	_____
Door knob sets	88	22,000	_____
Hinges	312	78,000	_____
T Hinges	188	47,000	_____
Hasps	125	31,250	_____
Flat corner	34	8,500	_____
Inside corner	66	16,500	_____
T Plates	66	16,500	_____
Mending plates	66	16,500	_____

DIRECT MATERIALS

Material	Pounds Per Year	Cost Per Pound	Estimated Cost	Actual Cost
Zinc Alloy	316,000	$ .155	$ 48,980	_____
Cold Rolled Steel	560,000	.060	33,600	_____
Bright wire, round	105,500	.070	7,385	_____
Bright wire, square	56,500	.070	3,955	_____
Spring Steel	3,100	.600	1,860	_____
Plating, cadmium	7,000	2.000	14,000	_____
Packing Materials			5,800	_____
Total			$ 115,580	_____

SUPPLIES

Description	Estimated Cost	Actual Cost
Cutting Tools	$ 500	_____
Dies	5,000	_____
Lubricants and Hand tools	700	_____
Factory Repairs and Maintenance	1,000	_____
Truck Expense	500	_____
Office Supplies	300	_____
Total	$ 8,000	_____

PRODUCTION TOOLS AND EQUIPMENT

Description	Number Required	Estimated Unit Cost	Estimated Total Cost	Actual Cost
Die casting machine	1	$ 23,000	$ 23,000	_____
Press, 50-ton	1	4,500	4,500	_____
Press, 75-ton	5	7,100	35,500	_____
Shear, 6 ft	1	2,500	2,500	_____
Drill press - floor	2	700	1,400	_____
Drill press - bench	2	350	700	_____
Power hacksaw 16" x 16"	1	900	900	_____
Plating equipment	1	22,000	22,000	_____
Furnace, heat treat	2	3,000	6,000	_____
Hand screw machine	1	1,500	1,500	_____
Stand grinder	1	200	200	_____
Universal grinder - tools	1	1,700	1,700	_____
Rivet spinner	1	500	500	_____
Zinc melting furnace	1	2,000	2,000	_____
Hand truck	2	50	100	_____
Hand files, work benches, vises and hammers			500	_____
Total			$103,000	_____
One-ton cab pick-up and delivery truck			$ 2,500	_____

DIES REQUIRED

Product	Type	Number Required	Estimated Unit Cost	Estimated Total Cost	Actual Cost
Padlock	Casting	1	$5,000	$ 5,000	_____
Shackle	Press	1	500	500	_____
Key and guide	Press	1	1,000	1,000	_____
Spring	Press	1	800	800	_____
Door lock	Casting	1	5,000	5,000	_____
Key and guide	Press	1	1,000	1,000	_____
Bolt	Press	1	500	500	_____
Door knobs	Casting	1	3,600	3,600	_____
Hinge	Press	2	800	1,600	_____
T Hinge	Press	1	800	800	_____
Flat corner	Press	1	500	500	_____
Inside corner	Press	1	400	400	_____
T Plate	Press	1	500	500	_____
Mending plate	Press	1	400	400	_____
Hasp	Press	2	800	1,600	_____
Staple	Press	1	500	500	_____
Staple plate	Press	1	500	500	_____
Total				$24,200	_____

OTHER TOOLS AND EQUIPMENT

Description	Number Required	Estimated Unit Cost	Estimated Total Cost	Actual Cost
Die tool grinding machine	1	$ 700	$ 700	_____
Typewriter	1	150	150	_____
Adding machine	1	150	150	_____
Total			$1,000	_____

FURNITURE AND FIXTURES

Description	Number Required	Estimated Unit Cost	Estimated Total Cost	Actual Cost
Bench 30' x 6' for packing	1	$ 200	$ 200	
Desks and chairs	4	125	500	
Filing cabinets	3	75	225	
Chairs	5	15	75	
Total	13		$ 1,000	

DIRECT LABOR

Operators	Number Required	Hourly Rate	Annual Cost	Actual Cost
Die cast and Trim locks	3	$ 2.00	$ 12,000	
Punch press operators	5	2.00	20,000	
Assemblers and packers	15	1.80	54,000	
Drill press operators	4	1.80	14,400	
Material handlers	2	1.60	6,400	
Heat treat and plating	3	2.00	12,000	
Utility man	1	1.60	3,200	
Total	33		$122,000	

INDIRECT LABOR

Description	Number Required	Hourly Rate	Annual Cost	Actual Cost
Manager	1		$ 10,000	
Receiving and shipping	1	$ 1.50	3,000	
Maintenance	2	2.00	8,000	
Bookkeeper	1		5,000	
Clerk	1		3,000	
Secretary	1		3,000	
Foreman	2		12,000	
Truck driver	1	1.50	3,000	
Total	10		$ 47,000	

PLANT LAYOUT

A plant layout indicating the location of machinery and operations is shown in Figure 15.

PLANT SITE

To provide for eventual expansion, the land for the plant site should contain at least 10,000 square feet. The site should be level, well drained, and should be located as advantageously as possible with respect to transportation, power, water, fuel, sources of markets and labor. The cost of such a site is estimated at $2,000.

BUILDING

A one-story building 60' x 60', or 3,600 square feet, will provide ample space for all operations including an office. It may be constructed with any suitable building materials. It is estimated that the complete building, including adequate plumbing and wiring, will cost about $3.50 per square foot, or a total of about $12,600.

POWER

About 830 kilowatt hours per day of power will be required. Based on a cost of $.023 per kilowatt hour the annual cost of power for all purposes is estimated at $4,750.

FUEL

It is estimated that the fuel consumption for production, heating and sanitary purposes will amount to about $3,000 per year.

WATER

Very little water is required for production purposes. Water requirements for the purposes of heat, sanitary facilities, drinking purposes and fire protection is estimated at $300 per year.

TRUCK

A one-ton cab pick-up and delivery truck is included in tools and equipment required, other than production. The maintenance and operating cost is included in supplies and the cost of the truck driver is included in the indirect labor.

DEPRECIATION

Description	Estimated Cost	Years' Life	Estimated Per Year	Actual Per Year
Building	$ 12,600	20	$ 630	_____
Production tools and equipment	103,000	10	10,300	_____
Dies	24,200	5	4,840	_____
Other tools and equipment	1,000	10	100	_____
Furniture and fixtures	1,000	10	100	_____
One-ton pick-up truck	2,500	4	625	_____
Total			$ 16,595	_____

MANUFACTURING OVERHEAD

Item	Estimated Annual Cost	Actual Annual Cost
Indirect Labor	$ 47,000	_____
Power	4,750	_____
Fuel	3,000	_____
Water	300	_____
Supplies	8,000	_____
Depreciation	16,595	_____
Total Manufacturing Overhead	$ 79,645	_____

MANUFACTURING COSTS

Item	Estimated	Actual
Direct Materials	$ 115,580	
Direct Labor	122,000	
Manufacturing Overhead	79,645	
Total	$ 317,225	

FIXED ASSETS

Item	Estimated	Actual
Land	$ 2,000	
Building	12,600	
Production Tools and Equipment	103,000	
Dies Required	24,200	
Other Tools and Equipment	1,000	
Furniture and Fixtures	1,000	
Pick-Up Truck	2,500	
Total	$ 146,300	

WORKING CAPITAL

Item		Estimated	Actual
Direct Materials	- 45 days	$ 14,450	
Direct Labor	- 30 days	10,150	
Manufacturing Overhead	- 30 days	6,600	
Reserve Sales Collections	- 30 days	36,600	
Total		$ 67,800	

CAPITAL REQUIREMENTS

Item	Estimated	Actual
Fixed Assets	$ 146,300	
Working Capital	67,800	
Total	$ 214,100	

SALES PRICE TO JOBBERS

Item	Size	Estimated Manufacturing Cost Per Dozen	Jobbers Price Per Dozen	Actual Manufacturing Cost	Actual Jobbers Price
Padlock	1 5/8"	$ 2.00	$ 2.84	_____	_____
Door lock	3 7/8" x 3 1/8"	2.00	2.84	_____	_____
Door knobs	2"	1.70	2.44	_____	_____
Hinges	2" x 2" x 2"	.64	.85	_____	_____
T Hinges	8" x 2"	.76	1.08	_____	_____
Hasps	4 1/2" x 1 1/8"	1.00	1.42	_____	_____
Flat corner	3" x 3"	.46	.71	_____	_____
Inside corner	6" x 3/4"	.67	.95	_____	_____
T Plate	3" x 3"	.38	.54	_____	_____
Mending plate	3/4" x 3"	.35	.50	_____	_____

SALES REVENUE

Item	Dozen Units	Estimated Price Per Dozen	Estimated Annual Sales	Actual Annual Sales
Padlocks	43,500	$2.84	$ 123,540	_____
Door locks	22,000	2.84	62,480	_____
Door knob sets	22,000	2.44	53,680	_____
Hinges	78,000	.85	66,300	_____
T Hinges	47,000	1.08	50,760	_____
Hasps	31,250	1.42	44,375	_____
Flat Corners	8,500	.71	6,035	_____
Inside Corners	16,500	.95	15,670	_____
T Plates	16,500	.54	8,910	_____
Mending Plates	16,500	.50	8,250	_____
Total Annual Sales			$ 440,000	_____

SALES

This product is usually sold to wholesalers who in turn sell to retailers, except where the product is used by other industries in large quantities. In such cases direct sales to industries is recommended.

RECAPITULATION OF COSTS, SALES AND PROFITS

Item	Estimated		Actual
Direct Materials	$ 115,580		_____
Direct Labor	122,000		_____
Manufacturing Overhead	79,645		
Total Manufacturing Costs		$ 317,225	_____
Interest on Loans	$ 5,000		_____
Insurance	1,000		_____
Legal	2,000		_____
Auditing	3,000		_____
Unforeseen Expense	11,775		_____
Total Administrative Costs		22,775	_____
Sales Commissions, Travel Freight Out, Bad Debts, Discounts and Allowances		40,000	_____
Profit before Taxes		60,000	_____
Total Annual Gross Sales		$ 440,000	_____

BUDGET CONTROL

A requisition form designed to provide accurate records of procurement and indicate the purpose of procurement with the least amount of time and effort is shown on the following page.

This form has an account number for each type of the various expenditures which the manager will review in detail, monthly or oftener, in order to control his expenses. Some items, such as power and water, are usually under contract and are easily checked by reference to monthly bills. For simplification, items (marked with an asterisk below) are omitted from the purchase requisition. Variations in the labor costs are easily reviewed by examination of the payroll vouchers. The simplified type of control thus provided makes certain that the manager can control expenditures promptly.

Following the requisition form, a sample voucher check is shown. Voucher checks should be used for the payment of all expenditures and the appropriate book account number placed on each voucher.

At the end of each month the manager will receive a statement of all expenditures broken down by budget accounts. If the expenditures exceed the budgeted monthly allowances of any of the accounts, the bookkeeper will furnish the manager with a break-down of all expenditures relative to the budgeted accounts exceeded. All these supporting data can be secured by reference to the purchase requisitions and the check vouchers. This reference will enable the manager to determine what caused the over-expenditure and take corrective action.

If at any time during each month it becomes apparent that expenditures will exceed any of the budget accounts, the bookkeeper will bring this to the attention of the manager for his information and action.

BUDGET CONTROL ACCOUNTS

Account Number		Monthly Expense	Monthly Budget	Annual Budget	Actual
10	Administrative	$_____	$ 916	$ 11,000	$_____
20	Sales	_____	3,333	40,000	_____
30	Direct Materials	_____	9,631	115,580	_____
40	Supplies	_____	666	8,000	_____
51	Power*	_____	400	4,750	_____
52	Water*	_____	25	300	_____
53	Fuel	_____	250	3,000	_____
60	Unforeseen Expense (Reserve Account)	_____	950	11,775	_____
71	Direct Labor*	_____	10,166	122,000	_____
72	Indirect Labor*	_____	3,916	47,000	_____
80	Depreciation (Reserve Account)	_____	---	16,595	_____

Note: Administrative includes interest on loans, insurance, legal and auditing.

PURCHASE REQUISITION	COMPANY NAME	DATE

- ☐ 10 AIMINISTRATION
- ☐ 20 SALES
- ☐ 30 MATERIALS
- ☐ 40 SUPPLIES
- ☐ 50 UTILITIES
- ☐ 60 UNFORESEEN EXPENSE

INDICATE BELOW THE USE OF MATERIALS

- ☐ DIRECT MATERIALS
- ☐ MAINTENANCE MATERIALS
- ☐ MAINTENANCE SERVICES
- ☐ OPERATING SUPPLIES

	PLEASE ORDER THESE MATERIALS OR SERVICES	DELIVERY WANTED	
QUANTITY	DESCRIPTION	UNIT	TOTAL

QUOTES FROM		REQUISITIONED BY	
QUOTES FROM		APPROVED BY	
QUOTES FROM		ORDER NO.	ORDER DATE

R. W. MITCHELL MANUFACTURING COMPANY
1422 BOSWORTH STREET, S. E.

65-22
514

ANYWHERE, U. S. A._____19____ No. 10000

PAY _____ DOLLARS $ _____
TO THE ORDER OF

R. W. MITCHELL MANUFACTURING COMPANY

TO FIRST NATIONAL BANK
ANYWHERE, U. S. A.

BY SAMPLE CHECK
VICE PRESIDENT

ACCOUNT NUMBER

Sample voucher check to be used for the payment of all expenditures in connection with Budget Control.

R. W. MITCHELL MANUFACTURING COMPANY

ENGINEERS

The services of professional engineers are desirable in the design of this plant, even though the proposed plant is small.

A correct design is one which provides the greatest economy in the investment of funds and establishes the basis of operation that will be most profitable in the beginning and will also be capable of expansion without expensive alteration.

The addresses of professional engineers who specialize in industrial design, some of whom may be willing to undertake such work on low cost projects overseas, can be secured by reference to the published cards in various engineering magazines. They may also be reached through their national organizations, one of which is the

National Society of Professional Engineers
2029 K Street, Northwest,
Washington 6, D. C.

Manufacturers of industrial equipment employ engineers familiar with the design and installation of their specialized products. These manufacturers are usually willing to give prospective customers the benefit of technical advice by those engineers in determining the suitability of their equipment in any proposed project.

The equipment manufacturers also know, and can recommend, professional engineers in private practice, who are willing and able to provide appropriate consulting services.

TRAINING

Manufacturing an inferior quality of product during the training period could create sales resistance that might be difficult to cope with later. To avoid such possibilities, the quality of the product should be maintained at all times, including the training period.

In some areas skilled operators may be available locally. In other areas all the operators may have to be trained.

If skilled operators are not available, adequate training would be assured by using one or more of the following methods:

A. If the plant is designed and installed by a competent engineering firm, the contract should be negotiated, if possible, on a turn-key basis. On this basis the contractor agrees to operate the plant and produce the quality and quantity of the product stated in the contract for an agreed period of time. Such a contract would assure adequate personnel training, since full quantity and quality could not be produced with an untrained organization.

B. The engineering firm that designs and installs the plant can usually make training arrangements to have key personnel placed, for training purposes, in a foreign industry that produces the same type of product. This would provide training for the key personnel while the plant is being installed.

C. If neither of the above methods is possible, then qualified and experienced individuals should be employed for the key positions, either permanently or temporarily, to perform the key operations and assist in training the organization, even if they must be secured outside the country.

D. The manager should have years of successful experience in this type of business and be fully qualified in all phases of management, including the training of employees.

SAFETY

There is always danger of accident and injury in any industrial plant. Because of this, the manager should take specific action to bring to the attention of each employee the importance of safety precautions and intelligent first aid.

Practically all machines have safety appliances, and the manager should see that these are in good working condition and that the operators are making full use of them.

In addition to constant watchfulness to make sure that all practicable safety precautions are taken, first aid supplies should be readily available. One complete first aid kit should be maintained near the manager's office, and others at appropriate places throughout the plant. Some of the employees should be trained to provide first aid service.

The use of accident posters in the plant have proved to be of value in reducing accidents. It is recommended that such posters be used, and that some direct special action be taken by the manager, at least once each month, to bring to the attention of all personnel the importance of safety precautions.

A fire brigade should be established and each member trained as to his responsibility in case of fire. Fire drills should be conducted periodically.

It is recommended that the employees be encouraged to offer suggestions or recommendations relative to prevention of accidents, removal of fire hazards and maintaining general interest in all safety factors.

SUMMARY

A small plant, built and operated according to the assumptions made in this manual would be a profitable undertaking.

There are some determinations, however, that should be made before a decision is reached to build and operate such a plant. Among the necessary determinations to be made are those with respect to the following items:

MATERIALS AND SUPPLIES

1. Are all materials and supplies available locally?
2. Is the local material market competitive?
3. Are satisfactory delivery of local materials assured at reasonable prices?
4. What materials and supplies must be imported?
5. Are they available in world markets at competitive prices?
6. Would prompt delivery of imported materials and supplies be assured so that large inventories would not be required?

MARKET FACTORS

1. Is there already a demand for the product?
   - A. Who are the principal consumers?
   - B. Who are possible new consumers?

2. How is demand for the product now satisfied?
   - A. By local production? If so, what is the volume of annual production?
   - B. What percentage of consumption is filled by local production?
   - C. By imports? If so, what is the volume of annual imports?
   - D. What percentage of consumption is met by imports?
   - E. From what areas are imports derived?

3. What is the estimated annual increase in local consumption over the next five years?
   - A. How were such estimates made?
   - B. By reference to official figures on population growth, family budgets, imports, etc.?
   - C. By consultation with trade or industry, ministries, associations, bankers, commercial houses, wholesalers, retailers, industrial consumers, etc.?

4. If the product is already being manufactured, can the existing and estimated future local market absorb production of the new plant without price-cutting or other dislocations?

5. Would the estimated sales price and quality of the new product make it competitive with an imported equivalent?
   A. After adjusting cost to local conditions, is the estimated sales price of the product so high that tariff protection is necessary to protect it from imports?

EXPORT MARKETS

1. Could the product compete in export markets on the basis of price, quality and dependability of supply?
2. Can export markets for the product be developed?
3. If so, in what areas and in what annual volume?
4. What procedures would be necessary to develop export markets?
5. What would it cost?

MARKETING PROBLEM

1. In calculating costs of the product, has adequate allowance been made for the expense of a sales department, advertising and promotion that might be required?

2. Do consumer prejudices against locally manufactured products exist?
   A. If so, why?
   B. Would they apply to the new product?
   C. If so, how could they be overcome and what would it cost to do so?

3. Do marketing and distribution facilities for the product exist?
   A. If not, can they be set up?
   B. What would it cost to do so?

4. Will the product be sold to:
   A. Wholesalers?
   B. Retailers?
   C. Direct to consumer?
   D. Other industries?
   E. Government?

ECONOMIC FACTORS

1. How much foreign exchange (and in what currency) is required to import machinery, equipment and supplies:
   A. How much foreign exchange (and in what currency) is required for annual interest payments and amortization of any loans contracted to import machinery and equipment, or for payment of royalties and technical services?
   B. How much foreign exchange (and in what currency) is required for annual import of raw materials and supplies?
   C. What are estimated annual foreign exchange earnings and in what currencies?
   D. Has careful consideration been given to the possibility of depreciation in the foreign exchange value of the local currency?
   E. Has careful consideration been given to the possibility of import controls, or restrictions on availabilities of foreign exchange necessary to operate the business?
   F. What benefits would the new business bring to the economy in the use of local raw materials: in employment and in technology?
   G. Do dependable facilities exist for transportation, power, fuel, water and sewage?
      (1) If not, can existing deficiencies be eliminated satisfactorily?
      (2) What would be the cost to do so?

PERSONNEL

1. Is there an adequate labor supply near the plant location?
   A. If not, how can the problem be solved?

2. Can the problem of training competent management and supervisory personnel be solved?
   A. Also, the training of skilled labor?
   B. Is technical advice available in the locality?
   C. If not, where can it be obtained and what will it cost?

LAWS AND REGULATIONS

1. Do existing labor laws, government regulations, laws and taxes favor establishment of new business?
   A. If not, can existing obstacles be removed?
   B. If so, how and when?

FINANCIAL FACTORS

1. Technical advice on selection of machinery and equipment.
   A. In selecting the machinery and equipment for the new plant, have reputable and competent engineers and technicians been consulted?
   B. Have they been asked for advice on the most suitable types of machinery and equipment for the process and locality?
   C. Have they carefully compared costs of various suppliers?
   D. Credit terms offered purchasers?

FINANCIAL REQUIREMENTS OF THE PROJECT

1. In estimating the cost of the project, has careful consideration been given to:
   A. The effect on costs of delays in construction schedules?
   B. In delivery and installation of machinery and equipment?
   C. In import of essential raw materials and supplies?

2. In calculating cash flow and working capital requirements, has careful consideration been given to:
   A. Maintaining adequate inventories of raw materials?
   B. Supplies and spare parts?
   C. Seasonal fluctuations in the business?
   D. The time required to liquidate credit sales to customers and bad debts?
   E. The period necessary to get the plant into production?
   F. Cash required to amortize its principle loans?

3. If the economy is in a period of inflation, has full allowance been made for the influence of rising prices and wages on the cost of the project and on working capital requirements?

SHORT TERM BANK CREDITS

1. Has it been possible to make arrangements with local banks to finance short-time working capital requirements of the business?

FINANCIAL PLAN

1. Has a definite plan to finance the project been worked out?
   A. Is sufficient capital available locally?
   B. If not, what is the plan to obtain the required capital?

GLOSSARY

Chuck	A device in a lathe or similar machine to hold the part being worked on.
Cores	Inserts into the mold cavity that help produce the desired shape of the casing.
Countersinking holes	Enlarge the opening to add sloping sides that fit flat head screws.
Die	Tool for shaping or stamping parts, usually a metal block.
Fixture	A device for holding or positioning a part being worked on.
Flash	Excess metal forced out at any opening into the mold cavity.
Jig	A device for holding a part and guiding a cutting tool.
Mold	A hollow shape in which parts are cast. Melted metal is put into the mold to harden into shape.
Sensitive drill press	See Figures 9 and 10. Any drill press on which the cutting tool is hand fed.
Tapping holes	Cutting threads for a screw into the sides of a hole.

BIBLIOGRAPHY

Textbooks

Pressworking of Metals	McGraw-Hill Publishing Co., Inc. 330 West 42nd Street New York 36, New York
Factory Management and Maintenance	McGraw-Hill Publishing Co., Inc. 330 West 42nd Street New York 36, New York

Periodicals

Mechanical Engineering	The American Society of Mechanical Engineers 20th and North Hampton Streets Easton, Pennsylvania
American Machinist	McGraw-Hill Publishing Co., Inc. 330 West 42nd Street New York 36, New York

ABBREVIATIONS

"	Inch or inches
'	Foot or feet
^{o}F	Degree Fahrenheit
K.W.H.	Kilowatt hour or hours

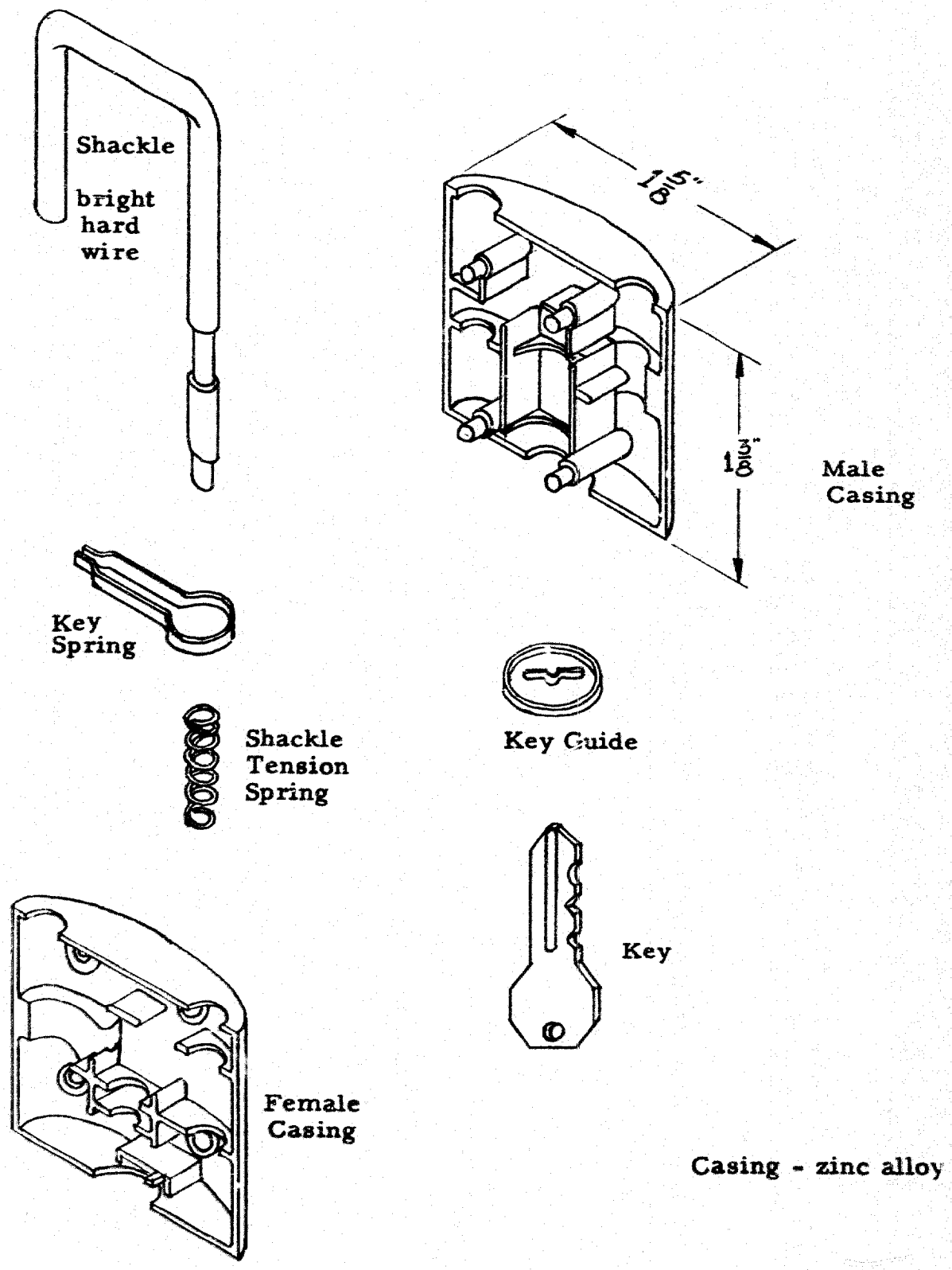

Figure 1 - Padlock - (Ward Lock)

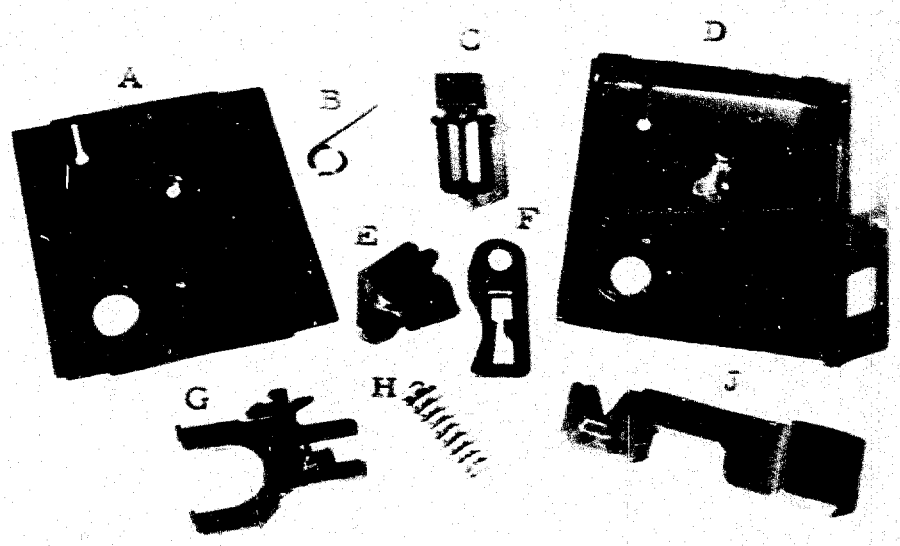

A Cover Plate	D Casing	G Yoke
B Spring	E Throw	H Spring
C Latch Bar	F Lock Bar Catch	J Lock Bar

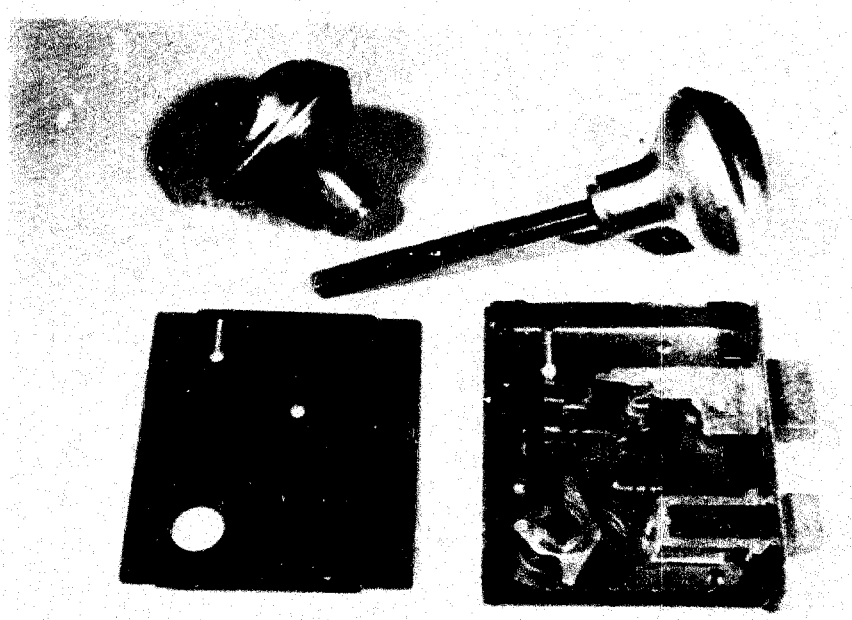

Figure 2 - Door Lock and Parts

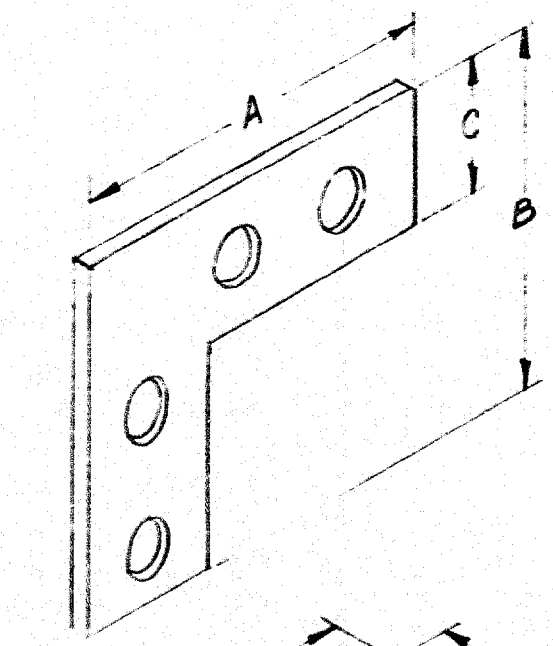

Flat Corner

A	2 1/2"	3"	6"
B	2 1/2"	3"	6"
C	1/2"	5/8"	1"

Each size requires (1) 2-stage die.
Cost per die = $500.

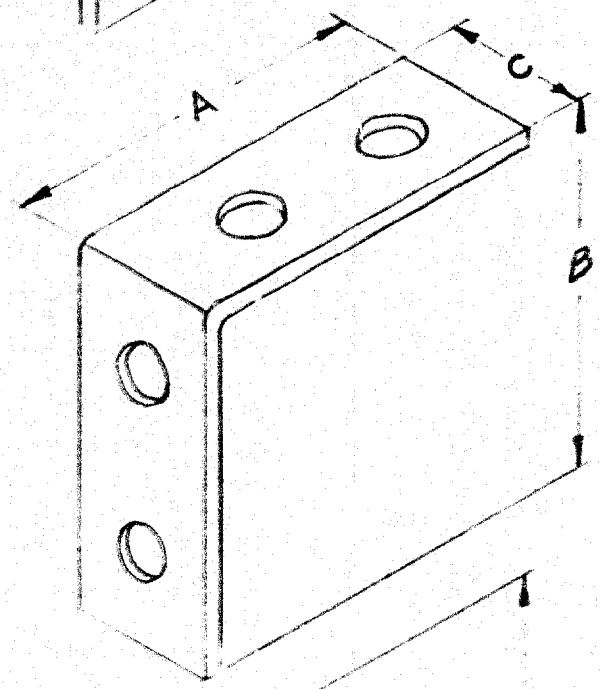

Inside Corner

A	1 1/2"	3"
B	1 1/2"	3"
C	1/2"	3/4"

Each size requires (1) 2-stage die = $400.
Each size requires (1) angle die = $600.

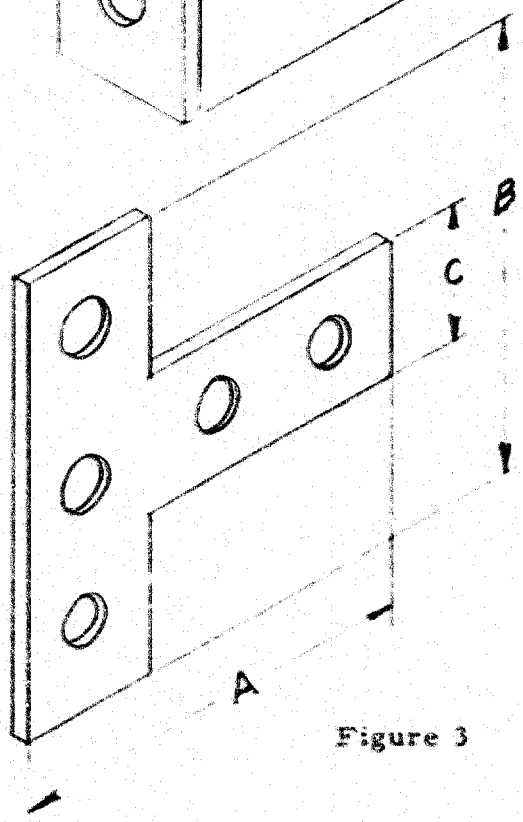

T - Plates

A	3"	5"
B	3"	5"
C	5/8"	1"

Each size requires (1) 2-stage die = $500.

Figure 3

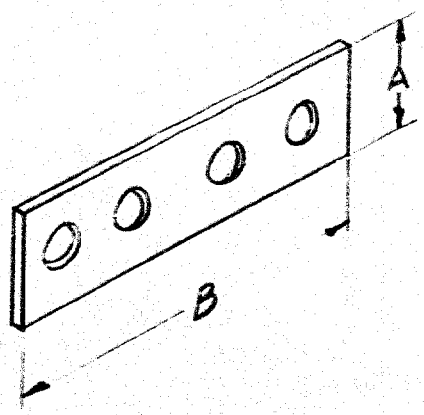

Mending Plate

A	3/4"	1 1/8"
B	3"	6"

(1) 2-stage die per size = $400.00

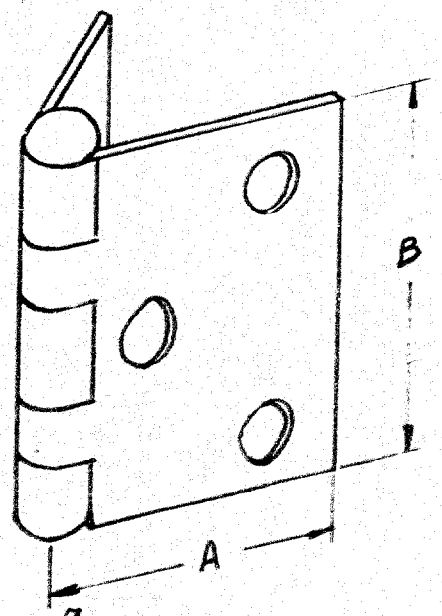

Door Hinge

	Inside pair	Outside pair
A	1 3/4"	2"
B	3 1/2"	2"

(2) 3-stage die per size = $750/die

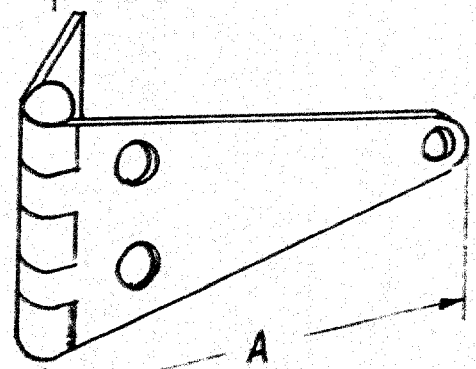

T - Hinge

A	6"	8"	10"

(1) 3-stage die per size = $750
Use B die from door hinge.

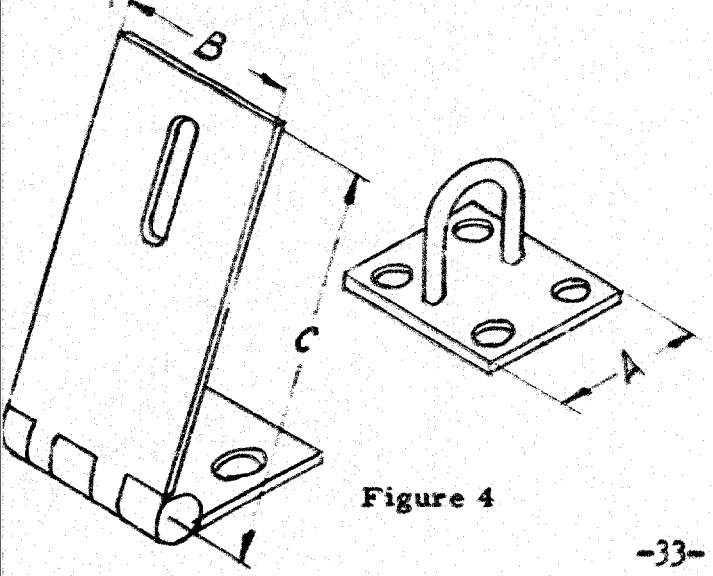

Safety Hinge Hasp

A	1 1/2"	2"
B	1 1/8"	1 1/2"
C	3 1/2"	6"

(2) 3-stage die per size = $750
(1) 2-stage die per size = $500

Figure 4

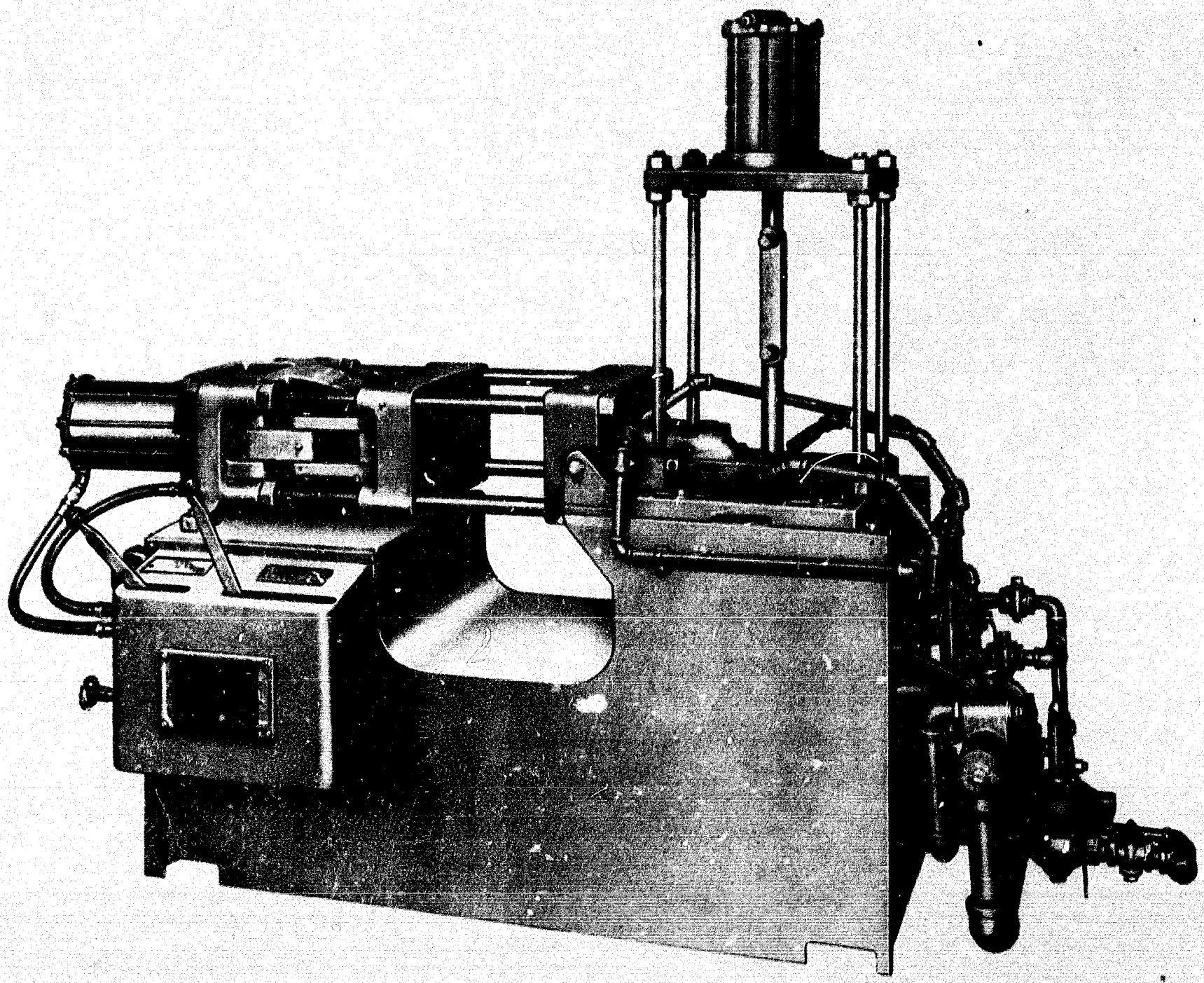

Figure 5 -- Die Casting Machine

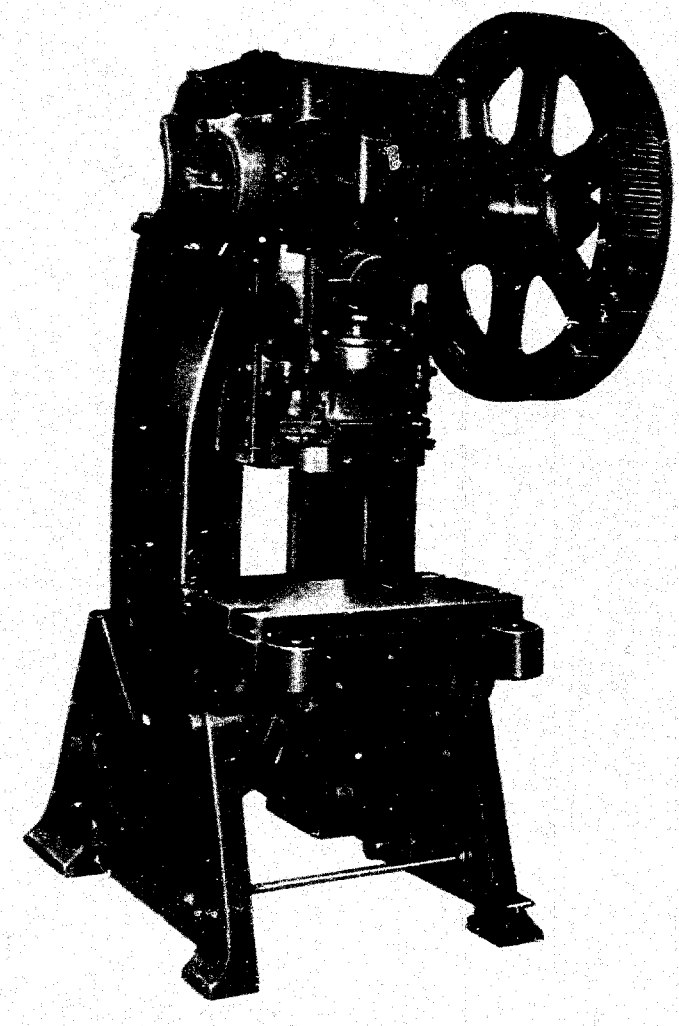

Figure 6 -- Punch Press

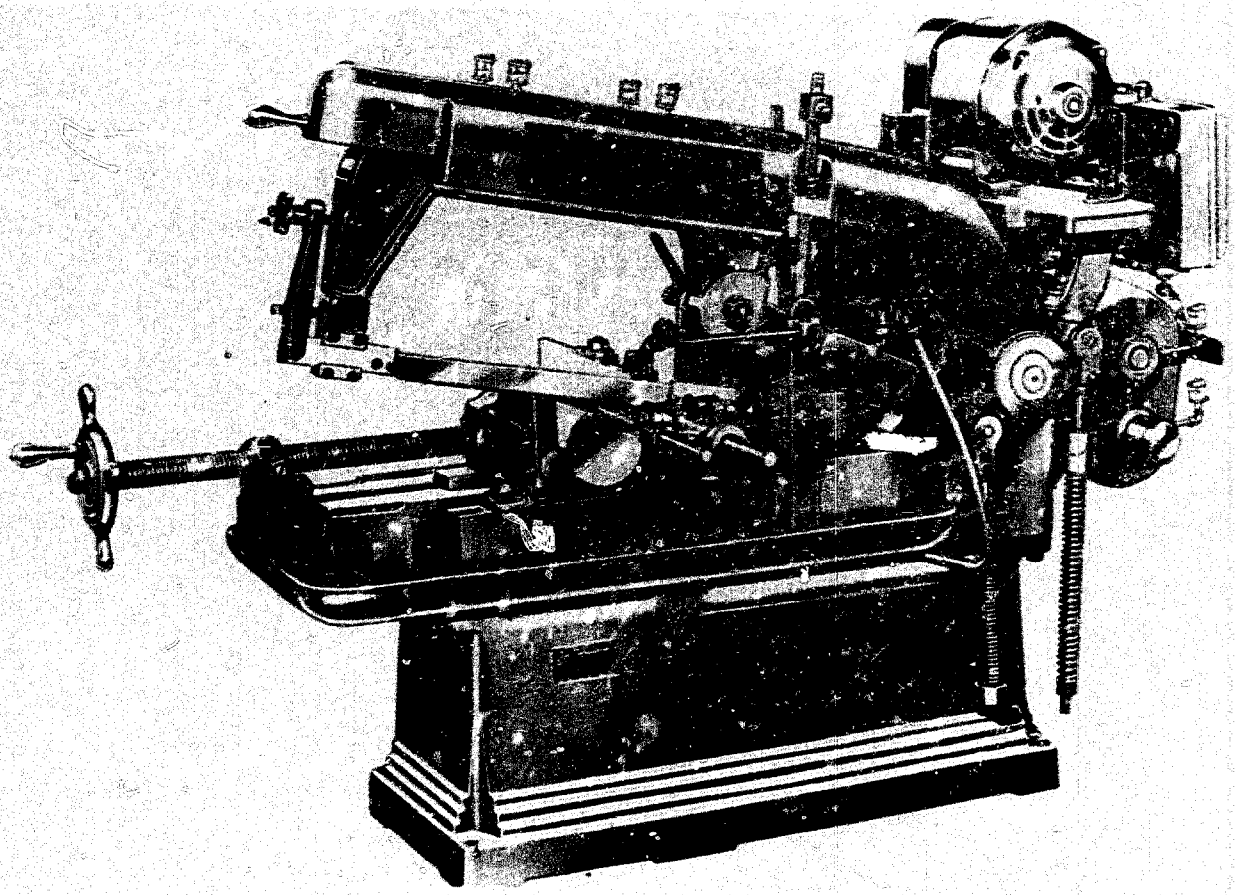

Figure 7 -- Power Hacksaw

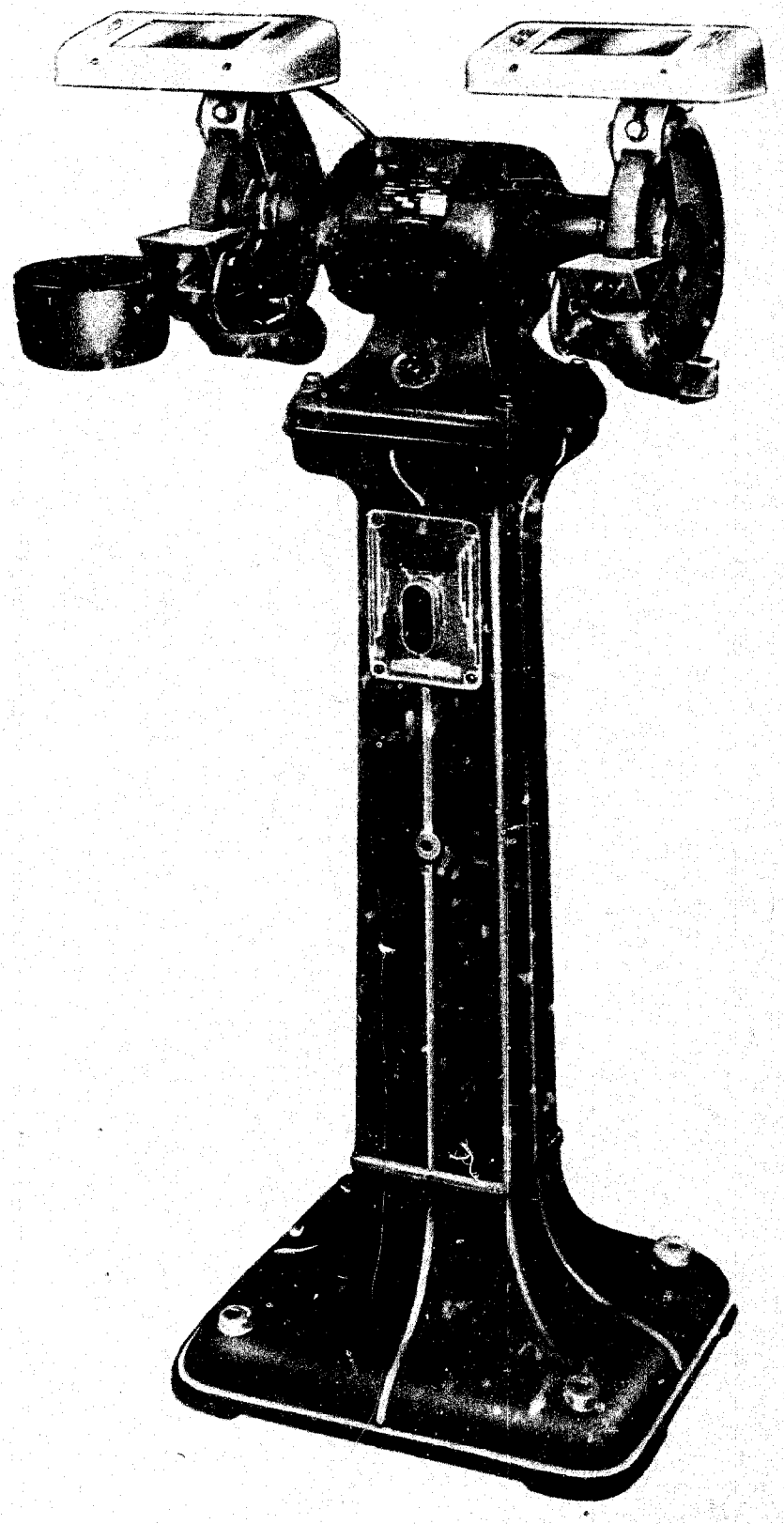

Figure 8 --- Pedestal Grinder

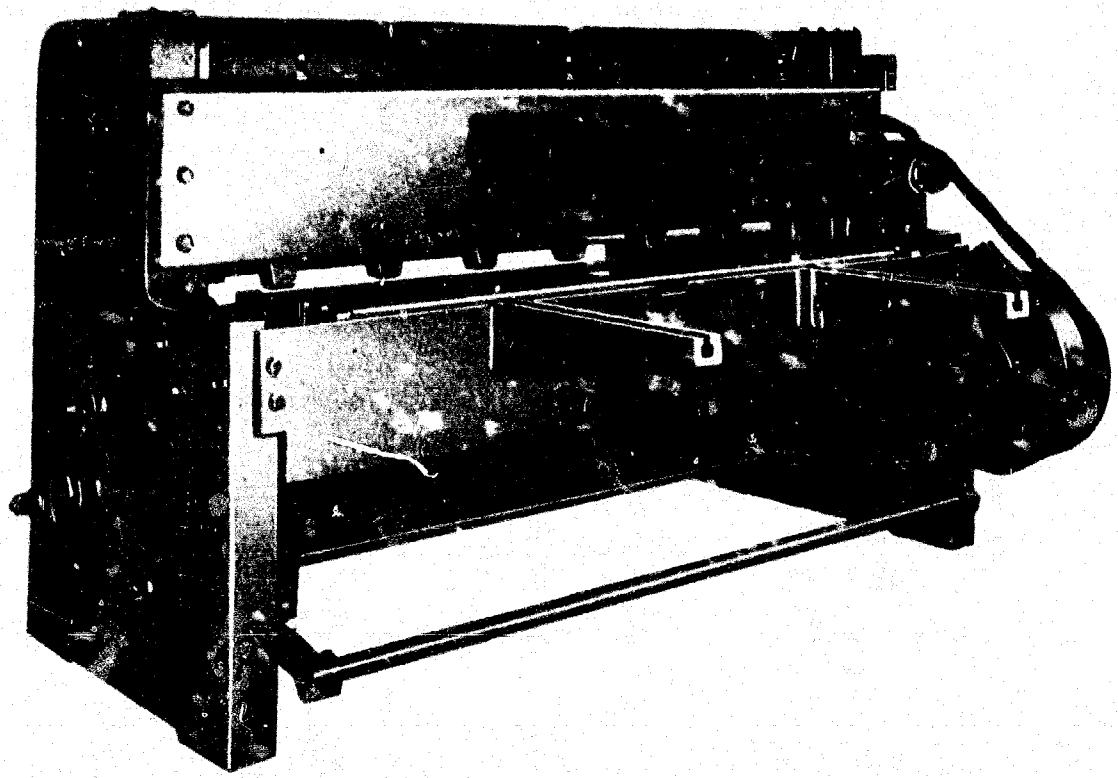

Figure 9 -- Power Shear

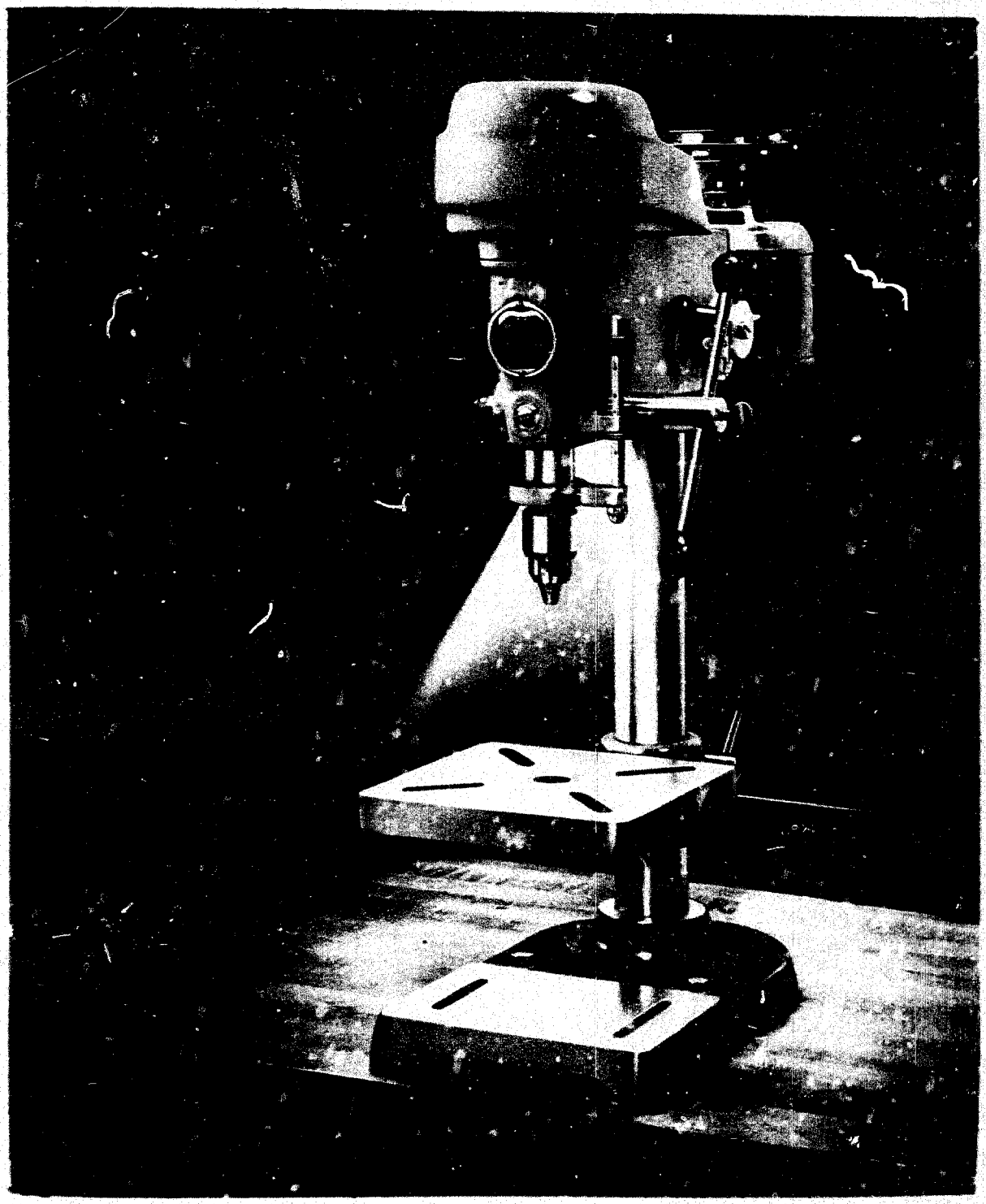

Figure 10 -- Bench Model Drill Press

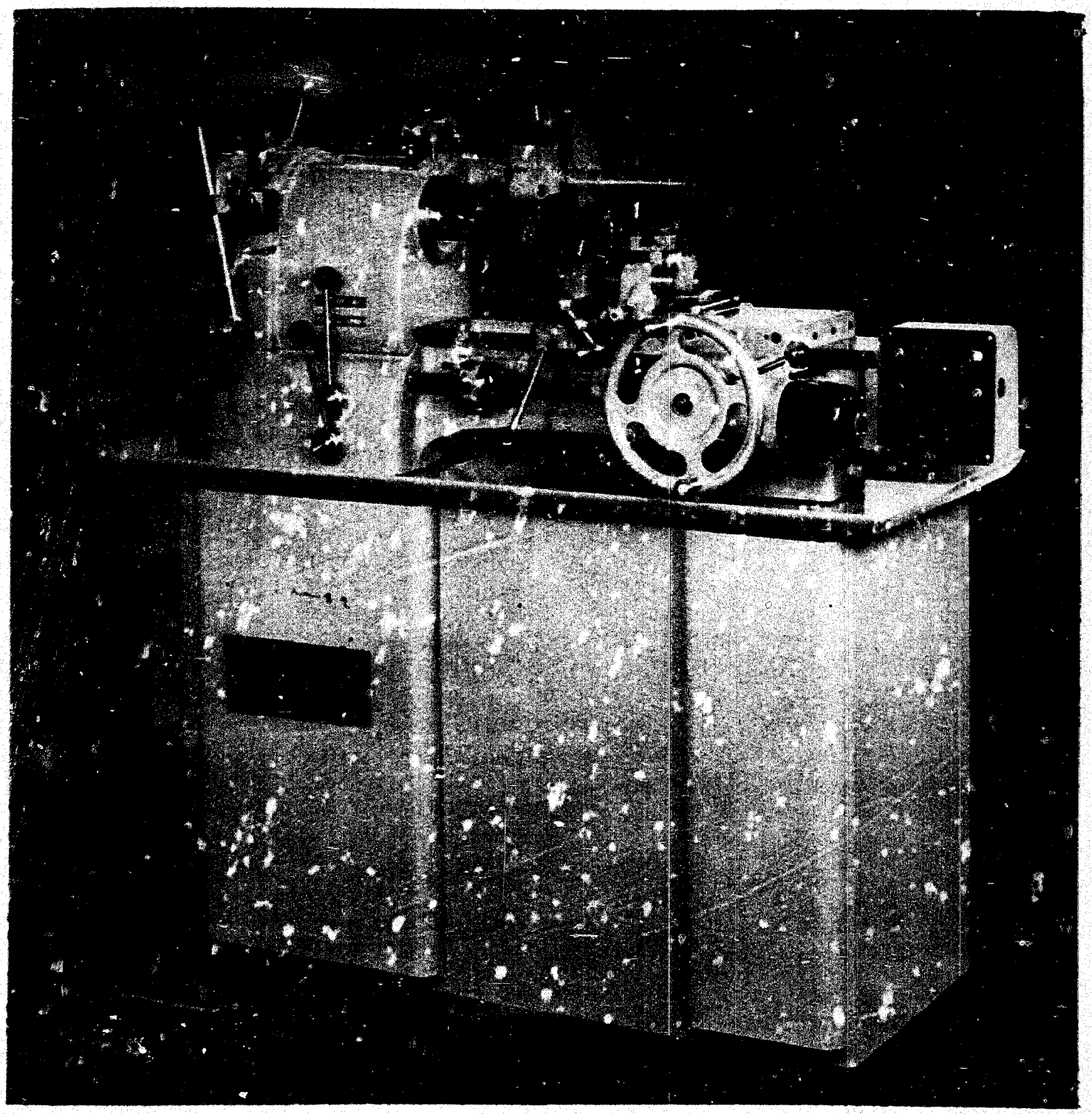

Figure 11 -- Single Spindle Hand Screw Machine

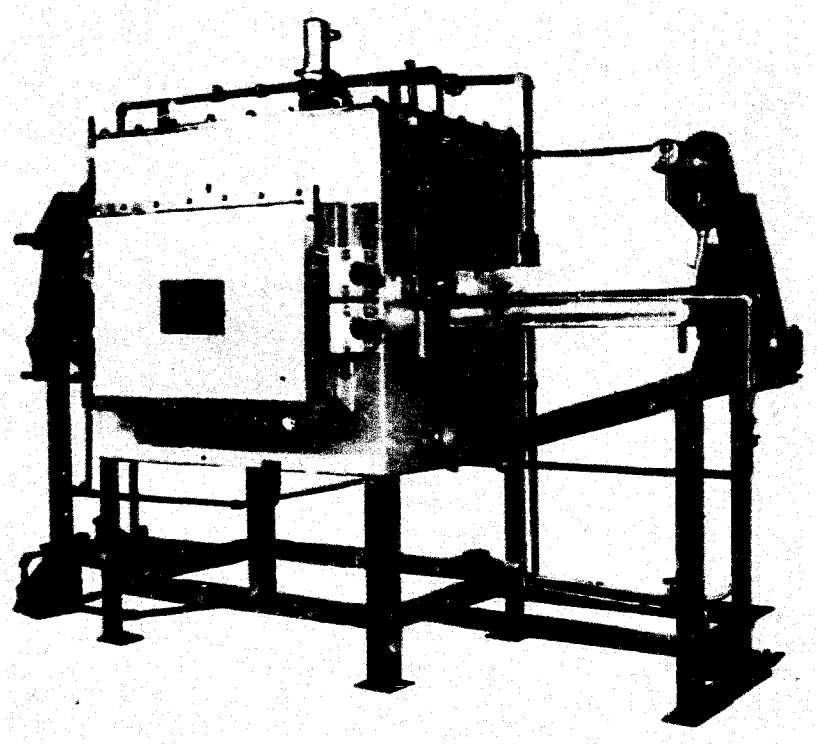

Figure 12 -- Heat Treat Furnace

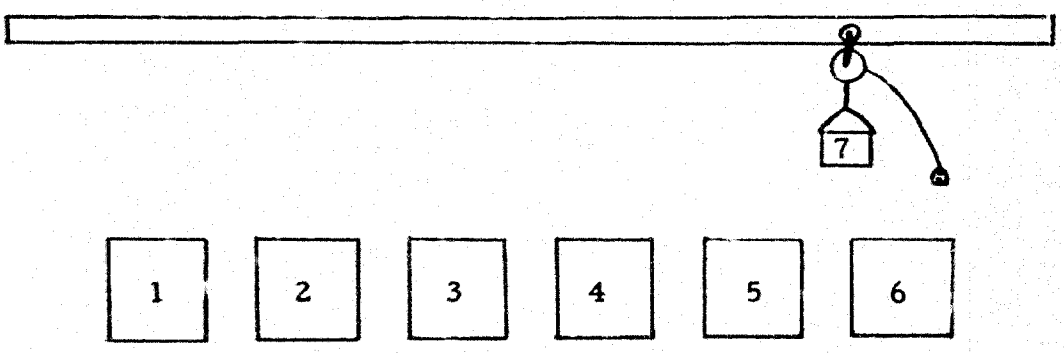

Tank No.	Operation
1	Hot alkaline solution
2	Cold rinse
3	Hydrochloric acid pickle
4	Cold rinse
5	Cadmium plate
6	Cold and hot rinses
7	Basket for parts

Figure 13. Schematic View of Plating Equipment

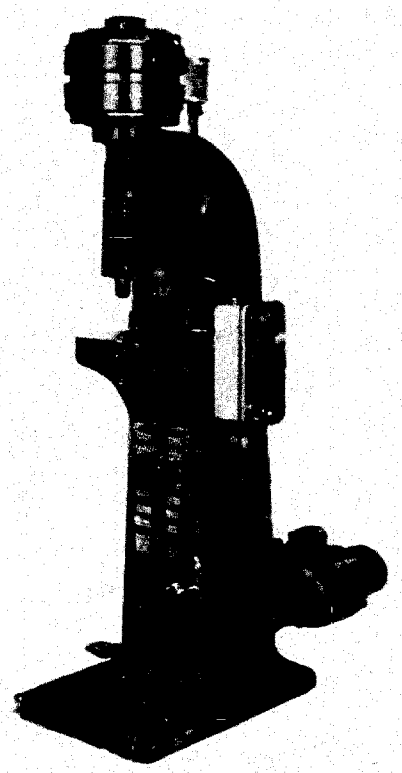

Figure 14 -- Rivet Spinner

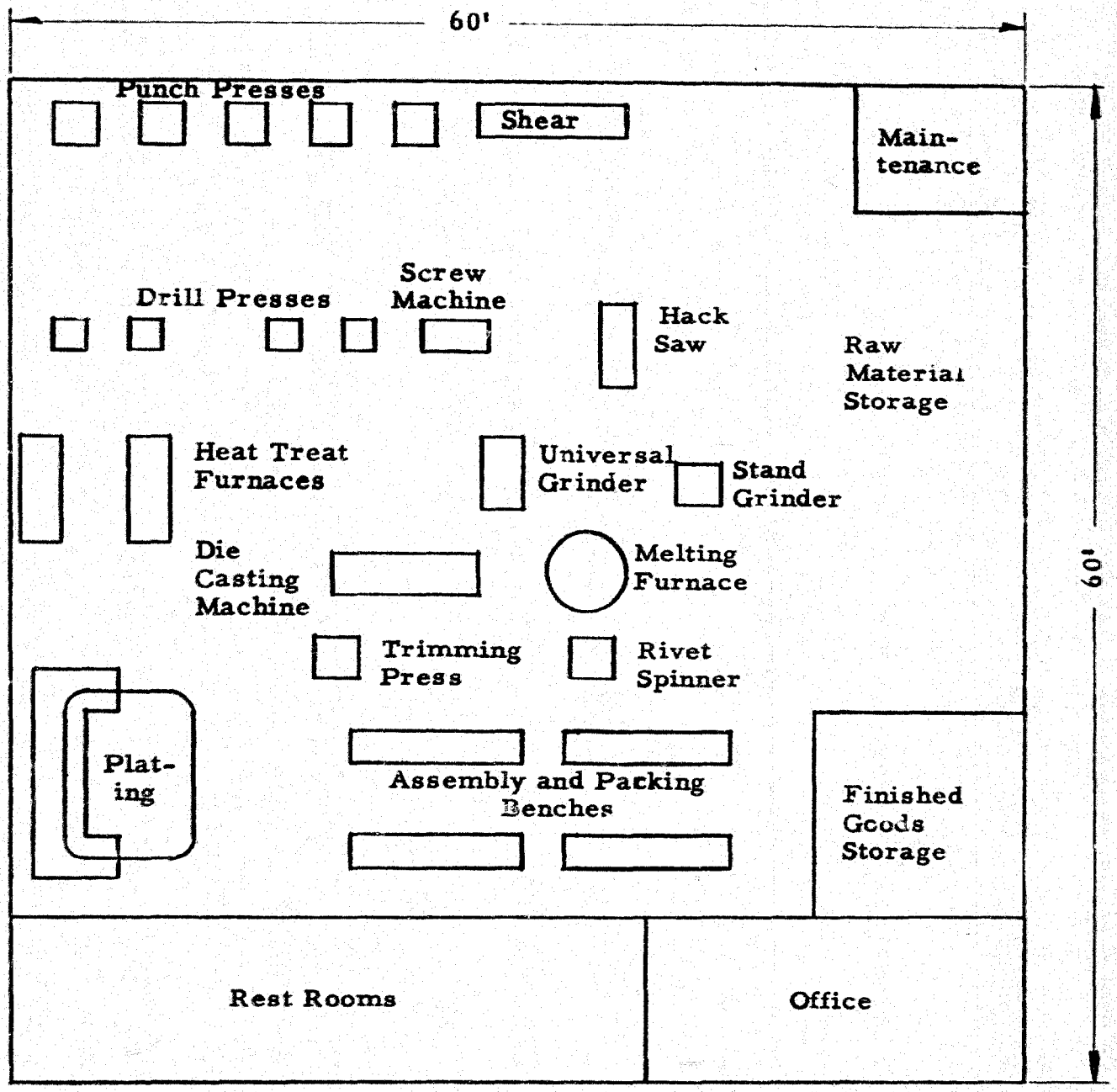

Figure 15 - Preliminary Plant Layout

INTERNATIONAL COOPERATION ADMINISTRATION

SERVICES OF THE INDUSTRIAL TECHNICAL COOPERATION PROGRAM

TYPE III – TECHNICAL AIDS FOR OVERSEAS

- INDUSTRIAL REPORTS SERVICE

Provides basic information regarding:

1. Data and reference materials relating to private capital mobilization and its application in economic development.
2. Requirements for establishing and operating small factories in basic industries.
3. Man-hour requirements, operational characteristics, and equipment utilization in representative U. S. factories in selected industries.
4. Man-hour and materials savings through standardization, simplification, and specialization studies.
5. Supervisory and other specialized training procedures and techniques.
6. U. S. experience in specialized fields.

- TECHNICAL DIGEST SERVICE

Provides digests and abstracts, full length articles, and bibliographical references on U. S. developments in products, processes, and work techniques derived from U. S. technical, scientific, and trade periodicals, and other pertinent sources.

- TECHNICAL INQUIRY SERVICE

Provides answers to individual questions relating to products, processes, machinery and equipment, production operations, work techniques, management practices and concepts, factory engineering, and basic requirements for industrial production.

- TRAINING MATERIALS SERVICE

Provides basic materials for use by specialized technicians in the conduct of management, supervisory and specialized training courses in host countries.

- TECHNICAL LITERATURE SERVICE

Provides recommendations and guidance regarding current useful world-wide publications relating to industry and productivity improvement; distributes carefully selected and representative new publications of particular value for program use; and facilitates mission literature procurement.

- U. S. BOOK EXCHANGE SERVICE

Provides, on Mission approval, technical and scientific books and periodicals on exchange basis to overseas libraries.

- VISUALS AND NEW MEDIA

Provides technical advice and guidance to missions on new industrial visuals. Provides for cooperative program adaptation and use a variety of visual materials, including loan exhibits, silk-screen display panels, graphic brochures, slide and sound kits, and related materials.

- TECHNICAL FILM SERVICE

Provides guidance for and facilitates procurement of U. S. technical and training films for program use; provides representative U. S. technical industrial films and filmstrips on loan basis for short-term program requirements; and facilitates adaptation of films into foreign language versions for program use overseas.