F 532
PR-48

# PLANT REQUIREMENTS FOR MANUFACTURE OF FISH MEAL

TECHNICAL AIDS BRANCH

INTERNATIONAL COOPERATION ADMINISTRATION

Washington, D. C.

A.I.D.
Reference Center
Room 1656 NS

# FOREWORD

This brochure is one of a series of rep s resulting from overseas technical inquiries on factory or commercial establishments, operation, management, and engineering. The report is designed to provide only a general picture of the factors that must be considered in establishing and operating a factory of this type. In most cases, plans for actual installations will require expert engineering and financial advice in order to meet specific local conditions.

Mention of the name of any firm, product, or process in this report is not to be considered a recommendation or an endorsement by the International Cooperation Administration, but merely a citation that is typical in its field.

Industrial reports prepared for ICA under special contract are customarily reviewed and edited before publication. This report, however, like other technical inquiry replies, has not been reviewed; it is the sole responsibility of the firm that prepared the report.

This brochure was prepared in February 1956 by the Office of Technical Services, U.S. Department of Commerce, Washington, D. C.

* * * * * *

For further information and assistance, contact should be made with the local Productivity Center, Industrial Institute, Servicio, or United States Operations Mission.

Code Number
48

Fish Meal

INQUIRY: Detailed information is requested for a fish meal plant to process about five tons of raw material, fish and fish waste, per eight hours.

INFORMATION SUBMITTED:

The inquiry was submitted to Edw. Renneburg & Sons Co., 2639 Boston Street, Baltimore 24, Md., U.S.A. This firm is the oldest and largest manufacturer of fish reduction equipment in the United States. Their smallest continuous fish meal unit is designed to handle up to two and a half tons of raw fish or fish waste per hour, which would be too large for the subject project. Therefore, they have quoted on the following specially designed equipment for processing about three-fourths of a ton per hour.

Item #1

One (1) Rietz Model PB-10-H3236 Medium Industrial Type Prebreaker complete with 16" x 17" feed hopper, split body, fixed anvils and rotating knives for shredding and mascerating those fish exceeding approximately 10" in length. This Prebreaker is to be complete with 10 HP motor and V-belt to flat pulley drive. The approximate net weight 1300 pounds, gross weight 1650 pounds, volume about 46 cubic feet.

Item #II

One (1) special RENNEBURG Elevator for conveying the shredded and mascerated fish up to the Cooker which will be mounted above the Press. Motor and drive of suitable size for operating the Elevator will be provided.

Item #III

One (1) 13" diameter by approximately 13' long RENNEBURG Continuous Live Steam Cooker, complete with variable speed feed screw to control the input of raw fish (or with variable speed drive on the Elevator described in Item II above, at our option for controlling input). The Cooker is to be further equipped with removable covers, underfeed system of sparge jets with manifolds, 1 HP Reeves, or equivalent variable speed Moto-drive to control the speed of cooking. We will also supply structural steel "A" frames for mounting the

cooker above the fish press, as well as the connecting hopper between the cooker discharge and the press intake, this hopper to have safety overflow and sampling door. Approximate gross weight 1850 pounds, net weight 1570 pounds and volume about 185 cubic feet.

**Item #IV**

One (1) 5' RENNEBURG Continuous Screw Fish Press, all steel construction, brass-lined with self-relieving holes for thorough drainage, quick-opening, hinged type casing, the press to be equipped with full-length patented force-feed chain, our steel machined screw and drive sprocket, together with 7-1/2 HP Reeves variable speed motorized Unit to drive the press. We will also furnish removable splash covers for the top of the press and catch pan of steel construction underneath the Unit to collect the fish juices and oil. Approximate gross weight 6500 pounds, net weight 5500 pounds and volume about 190 cubic feet.

**Item #V**

One (1) special RENNEBURG Pilot Plant DehydrO-Mat (Patented) continuous rotary parallel flow warm air dryer, the main section of the shell to be 5' in diameter having 28" diameter inlet and outlet ends, the shell to be approximately 11' long overall complete with two (2) machined tires, band gear, product retaining and stiffener ring at the feed end and our lifting and distributing flights for maximum exposure of each particle of meal to the warm drying gases. We also propose to supply one (1) RENNEBURG steel Dryer Furnace approximately 4'-6" in diameter by 7'-6" long with suitable oil burning equipment arranged for mounting on the front of the Furnace and with overfeed feed chute for the introduction of the presscake into the DehydrO-Mat throat. This furnace is to be insulated and properly lined with refractories of the finest quality. The furnace is to be large enough to insure clean, efficient combustion with provision for the admission of primary, secondary and tertiary air with dampers. The DehydrO-Mat cylinder is to rotate on four (4) machined steel trunnion wheels mounted between Dodge-Timken, or equal anti-friction bearing pillow blocks securely attached to a full length welded structural steel base. Our standard Thrust Roller Assembly is also to be furnished to prevent longitudinal movement of the dryer which is to be operated by means of a 3 HP Reeves, or equal

variable speed Unit. Our latest and most efficient type seals are to be provided at both the feed and discharge ends of the DehydrO-Mat cylinder. Also included will be a dryer discharge breeching of steel construction with air lock arranged for product discharge. We will further provide a RENNEBURG, Sturtevant, or equal industrial material handling Fan driven by 5 HP motor and Cyclone Collector, together with adjustable damper section and 90 degree elbow, all as shown on drawing H-3657. You will note that the Furnace, Dryer and air handling system is all mounted on a full-length structural steel base. The overall dimensions of the dryer are approximately 28' long by 5' wide by 7' high.

**Item #VI**

One (1) special dry meal Grinder complete with 5 HP, 3600 RPM motor, including one spare set of hammers and two extra sets of screens with openings of the proper size. We will also provide one (1) small bagging collector and the duct work between dry meal grinder and the bagging collector. No weighing scale is included.

**Item #VII**

We will also provide the necessary conveying equipment between the press discharge and the dryer intake including fluffer, as well as the conveying equipment from the DehydrO-Mat dryer discharge to the dry meal grinder with motors, so that the operation will be a continuous one from the time the raw material enters the Prebreaker until the dried fish meal is discharged from the bagging or sacking collector. Temperature indicating equipment for the DehydrO-Mat Dryer is also included.

Price: TWENTY-EIGHT THOUSAND, SEVEN HUNDRED FIFTY-TWO DOLLARS ($28,752.00).

Apparently from the information contained in your letter, part of the raw material will consist of sun-dried fish brought in from outlining areas to be ground into fish meal. Since some of this raw material will consist of fish weighing up to 5 pounds, it will probably be advisable to process this material through the Prebreaker and then possibly through a rotating screen to remove sand before the sun-dried fish are ground in the dry meal grinder. We can provide such a rotary screen complete with motor for an additional cost of EIGHT HUNDRED TWENTY DOLLARS ($820.00).

We note that an oil extraction plant is to be designed as an alternate. Normally, the mixture of oil, water and a small amount of "fines" or solids which pass through the press openings should first be screened

over a Model #124 Vibrating Screen to reclaim most of the solids which can then be dried in the DehydrO-Mat Dryer. The price of this NRM-124 Single Deck Vibrating Screen with waste water feed chute and tank and including 60 mesh stainless steel screen cloth with motor supports. 1 HP motor and V-belt drive is ONE THOUSAND, THREE HUNDRED DOLLARS ($1,300.00). The net weight of the Vibrating Screen (less motor) is approximately 1500 pounds, gross weight is 1850 pounds and volume about 60 cubic feet. The net weight of the motor is approximately 130 pounds, gross weight 150 pounds and volume 8 cubic feet.

Although the fish oil can be separated solely by means of a settling tank system consisting of a primary separation tank approximately 4' x 4' by 10' and a slightly smaller secondary separation tank with steam coils, baffles, openings and valves with two (2) small separation tanks, including steel sump and sump pump, a more efficient method of oil separation consists of using a Centrifuge in conjunction with a simplified settling tank system which the Customer could undoubtedly build himself or obtain locally in India. Although expensive, this method produces more oil of better quality. Here, however, we would also recommend screening the press liquids first over the Vibrating Screen, then running the screened mixture into a two-tank settling system with the overflow from the first tank passing into the second tank before being Centrifuged. The first tank should be large enough to permit holding the liquids for several hours so that the oil will begin to break in this tank and the overflow will then consist of an oil rich mixture. Also, some of the small solid particles which have passed through the screen will settle in the first tank and can be withdrawn from the bottom. The second tank is equipped with a live steam coil and the oil is heated to about 200 degrees F. before the mixture passes into the Centrifugal oil separator along with a stream of hot water at the same temperature. At regular intervals the bottom discharge valve in the primary tank is opened to release some of the "stickwater" and accumulated meal. For the Centrifugal operation, we are pleased to offer one (1) Titan Model NS-66 Superjector arranged for fish oil service, the Unit to be complete with approximately 5 HP motor, including bowl, standard supply of spare parts and tools. The price of this NS-66 Centrifuge is EIGHT THOUSAND, SEVEN HUNDRED DOLLARS ($8,700.00), including the motor. As this is a special motor, we do not consider it as advisable to quote on the Centrifuge without the motor. The approximate gross weight of the NS-66 Centrifuge and motor is 2350 pounds, net weight about 1750 pounds, volume approximately 60 cubic feet.

A small boiler will, of course, be required to furnish process steam for cooking, for use in the oil separation operation and perhaps for other utilities around the fish reduction factory. We no longer manufacture boilers and our Customers generally purchase their own, many of them using Orr and Sembower POWERMASTER Steam Generating Units of the "Packaged Unit" type. We believe that these are obtainable in India. A 10 HP boiler would

be adequate. Unfortunately, the smallest POWERMASTER Unit arranged for burning Bunker "C" (heavy) fuel oil is their 40 HP Unit which sells for around $6,300.00. This would be much too large. On the other hand, the smallest POWERMASTER is, we are informed, their 15 HP Unit. Therefore, we are suggesting as a substitute the use of a Fulton two-pass vertical water-jacket boiler for use with #2 (Diesel) oil, as surely Diesel oil must be available. The price of the 10 HP Fulton Boiler complete with burner refractories, boiler trim, in addition to a feed water system (condensate return receiver, water level control and feed pump, etc.) is ONE THOUSAND, SIX HUNDRED TWENTY DOLLARS ($1,620.00). The Fulton Boiler is designed in accordance with the ASME code for 100 PSIG working pressure and bears the stamp of the Underwriters Approval. The gross weight of this boiler is approximately 1800 pounds, net weight about 1500 pounds and volume around 115 cubic feet.

The above prices include export packing and are net f.o.b. our factory with freight allowed to the Steamship Terminal in Baltimore. Shipment could be made in approximately ten (10) weeks after receipt of purchase order and satisfactory terms have been arranged. On export shipments, we normally request 1/3 cash with the order, the balance to be covered by a confirmed, irrevocable letter of credit payable against commercial invoices and bills of lading evidencing delivery of the equipment to the carrier. It is understood that the prices quoted do not include any federal, state, municipal or other excise taxes, sales, use or similar taxes which may be in effect at the time of delivery and which are to be paid by the Purchaser direct. We guarantee all equipment manufactured by us to be free from defects in workmanship and material for a period of one (1) year from date of shipment and we warrant that our machinery will deliver its output as above specified, provided the equipment is properly installed and maintained and operated under normal conditions and with competent supervision. We will not, of course, be responsible for or liable in any way for consequential damages or contingent liability. The motors furnished are suitable for operation on 3 phase, 60 cycle, 220/440 volt current.

A further description of this equipment will be found in our Bulletin Nos. 345, 961, 854, and 450, as well as in the reprints from the October, 1954 issue of FISHING GAZETTE and from the May, 1955 issue of INDUSTRIAL AND ENGINEERING CHEMISTRY.

We regret that due to a heavy schedule in our Engineering Department, we have not had an opportunity to prepare a complete layout of this Pilot Plant equipment. After the order has been received and entered in our production schedule, foundation plans, blueprints, and operating instructions will, of course, be forwarded to the Customer. In addition, if necessary, we can supply the services of a qualified Engineer to supervise erection and to train the Indian Government's Personnel in the proper operation of the equipment. Our normal charge for such services is

FIFTY DOLLARS ($50.00) per day in addition, of course, to his traveling and living expenses.

You will note that we are recommending for this service our latest type of Dryer, the DehydrO-Mat, which was especially designed for heat-sensitive materials, (such as fish meal) and products containing internal moisture. We much prefer the DehydrO-Mat to the conventional types of direct heat and steam tube dryers which we also manufacture. Incidentally, it is not practical to process Sharks in Continuous Cookers and Presses due to the cartilaginous nature of the material. However, sometimes our Customers mix small amounts of sharks (after removal of the fins, skins and livers) in with larger quantities of other fish in order to solve what is otherwise a nuisance problem. We will await with interest your reply after you have had an opportunity to consider our proposal.

- - - -

Mention of the name of any firm, product, or process in this report is not to be construed as a recommendation or endorsement, but merely as a citation that is typical in its field. Commercial directories generally list the names of additional companies and products.

References - (12)


Flowsheet - Pilot Plant Fish Meal and Oil Equipment (3/4 ton per hour input)
Drawing - Pilot Plant Dryer General Arrangement
Drawing - ayout of 12"x20'-0" Cooker Over 5 ft. Press
RENNEBURG brochure - Continuous Fish Meal Unit
RENNEBURG brochure - Continuous Steam Cookers for the Fishing Industry
RENNEBURG brochure - Continuous Screw Presses for the Fishing Industry
RENNEBURG brochure - Rotary Steam-Tube Dryers
RENNEBURG brochure - Processing Equipment
Reprint from INDUSTRIAL AND ENGINEERING CHEMISTRY, Vol. 47, p. 69A, May 1955
Reprint from FISHING GAZETTE, Oct. 1954
Chart on Rietz Prebreaker - Rietz Mfg. Co., Santa Rosa, Calif.
Brochure - Titan Superjectors


NOTE: To obtain copies of any enclosures, catalogs, bulletins, and other reference material mentioned in this report, please write direct to the indicated source of issue or supply.

SUBJECT: Fish Meal Plant

INQUIRY: Detailed information is requested for a fish meal plant to process about five tons of raw material, fish and fish waste, per eight hours.

INFORMATION SUBMITTED:

The inquiry was submitted to the California Press Manufacturing Company, 1800 Folsom St., San Francisco, California. This firm has submitted specifications showing and describing their California Junior Fish Meal Plant, which is the smallest unit they make for this purpose. This plant consists of the machinery, to receive the raw fish, deliver it to the fish cooker where the fish is cooked and oil liberated. The fish travels along in the cooker and is then discharged into an automatic press, which removes the free oil and water. It is then elevated to a storage chamber, from where it is conveyed directly into the dryer. The advantage of the storage chamber is to collect a load of the pressed material and hold this until the dryer has finished the previous batch. When the material is properly dried, the dryer is emptied by opening a gate which releases the dried material into a conveyor, which carries the meal to a storage bin, thence to the grinder, blower and to the sacking cyclone where the finished meal is sacked.

The specifications for the Junior Fish Meal Plant submitted by the California Press Manufacturing Company are as follows:

| | |
|---|---|
| HASHER (OPTIONAL AT ADDITIONAL COST) | This machine is made to cut up the material entering the cooker. The sizes of pieces can be altered by changing the discharge plate on front of machine. Entire machine is ruggedly made. Heavy cast gear box encloses the gears which are running in a bath of oil. Gear teeth are cut from solid metal and mounted on steel shafts which run in heavy duty ball bearings. The cutting plate and knife are forged steel and hardened after machining. This machine has proven satisfactory through many years operation, and can be depended upon to operate properly on a large variety of material. The entire unit is mounted upon a structural steel base, and is arranged to operate from a line shaft, or by electric motor. |
| ELEVATOR FEEDING RAW MATERIAL | Delivers the fish to the cooker semi-valve which in turn conveys the fish to the cooker. This elevator is standard bucket type, and is made of steel. Angle iron guides, securely fastened to each side of the elevator, support the loaded buckets. All sprockets are securely keyed to the shafting. Chain tighteners are provided and properly spaced buckets will carry the correct amount of material to the cooker valve. |

| | |
|---|---|
| #246 PRESS AND COOKER UNIT | This machine is of the best construction throughout. The cooker is mounted above the press and is driven from the press shaft. Extra sprockets are supplied to vary the speed if desired. Cooker is of steel construction equipped with semi-valve on feed end to prevent escape of steam. Two separate manifolds are supplied. Each manifold has a large number of uniformly spaced steam pipes welded into cooker to assure uniformity and close control of the cooking. A revolving screen is provided at the outlet, which screens the greater part of the free liquids before the material enters the press. The screen is arranged so it can readily be replaced without dismantling the machine. The screw is a new design arranged for uniform cooking and cleaning out the contents of the cooker, which delivers the same into the press. The press gearing is housed in a unit cast gear box. Gears and bearings run in a bath of oil. All press pinions and main shafting are carried on ball bearings. The heavy thrust pressing load is likewise carried on ball bearings. Screens surrounding the press screws are of heavy bronze plate construction with holes drilled from the solid metal, and relieved on the outside to facilitate drainage. These plate screens are mounted in heavy duty screen cages which are bolted together in halves so they can be readily removed for cleaning and inspection. |
| PRESS LIQUOR PUMP | Standard rotary type pump. Delivers press liquor to separating system. |
| PRESS CAKE ELEVATOR | Delivers the pressed cake from the press to the pressed cake storage tank. This elevator is of wooden slat type, with sides and ends of steel. A steel guide securely fastened to each side of the elevator supports the wooden slats. Chain tighteners are provided and properly spaced slats will carry the correct amount of material to the storage tank. |
| PRESSED CAKE STORAGE TANK | This tank accumulates the pressed cake between dryer changes. A heavy steel mixer screw mounted in the hoppered bottom of the tank keeps the material in constant agitation, and cleans out chamber at time of final discharge. |
| DRYER | One steam jacketed batch dryer is supplied with this plant. It is designed to permit charging and discharging without stopping the rotating mechanism. The dryer has a large exhaust stack, equipped with a condensate trap, which draws off the moisture as the heat from the dryer releases it. In this manner the drying is completed quickly and meal may be dried to exactly the desired point. The dryer is emptied by opening the door and permitting the material to flow into dryer discharge conveyor. |

| | |
|---|---|
| FISHMEAL STORAGE RESERVOIR | For storing batches of meal as received from the dryer, and slowly feeding it to the grinder. During storage, the meal is constantly being stirred so as to cool it gradually and evenly, thus making a more uniform product. |
| MEAL GRINDING UNIT | Unit consists of California Swing Hammer type fishmeal grinder with grinding plate, grinding screen, and meal blower. Grinder and blower are mounted as a unit on heavy structural steel base. The grinder may be equipped with screen to deliver as fine a meal as desired. Meal from the grinder is drawn through a meal system to the sacking cyclone and delivered into the bag. |
| CONVEYORS | Steel trough screw conveyors for conveying the material from the pressed cake storage tank to the dryers, and from the dryers to the fishmeal storage reservoir are provided. |

Mention of the name of any firm, product, or process in this report is not to be construed as a recommendation or endorsement, but merely as a citation that is typical in its field. Commercial directories generally list the names of additional companies and products.

References:

Blueprint #1695 showing layout of plant.

Literature describing in detail the following units:

Hasher, Fish Cooker and Press Unit, Steam Jacketed Batch Dryer, Meal Grinder and Blower Unit, Meal Beater, Foots Recovery Unit, and Dehydrater Unit.

Brochure on various plants installed by the California Press Manufacturing Company.

NOTE: To obtain copies of any enclosures, catalogs, bulletins, and other reference material mentioned in this report, please write direct to the indicated source of issue or supply.

C.T.S./ 2/56

NOTE: Junior Fishmeal Plant plan and elevation are shown on pages 10 and 11.

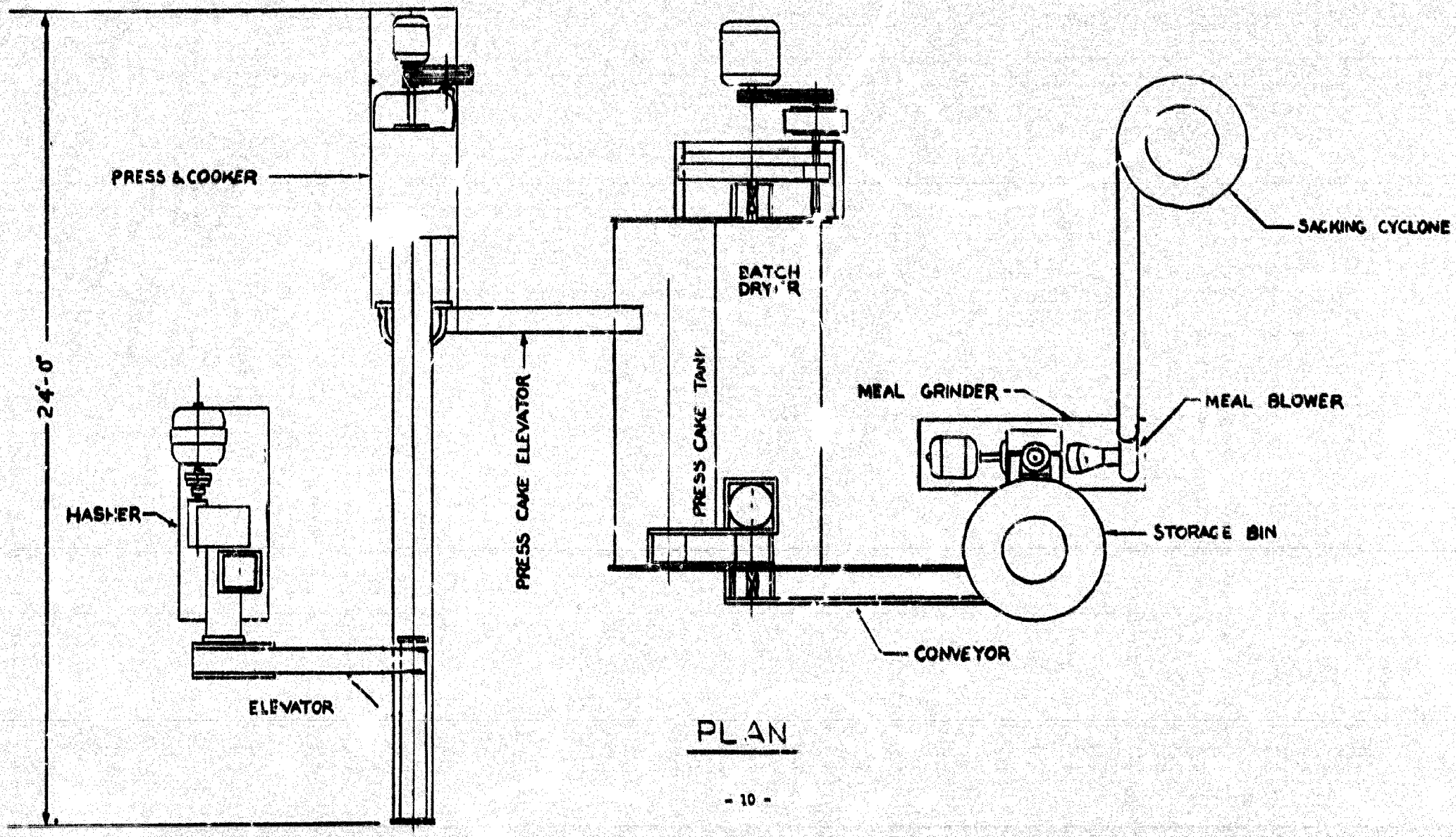
PRESS & COOKER
24'-0"
HASHER
ELEVATOR
PRESS CAKE ELEVATOR
PRESS CAKE TANK
BATCH DRYER
MEAL GRINDER
MEAL BLOWER
SACKING CYCLONE
STORAGE BIN
CONVEYOR

PLAN

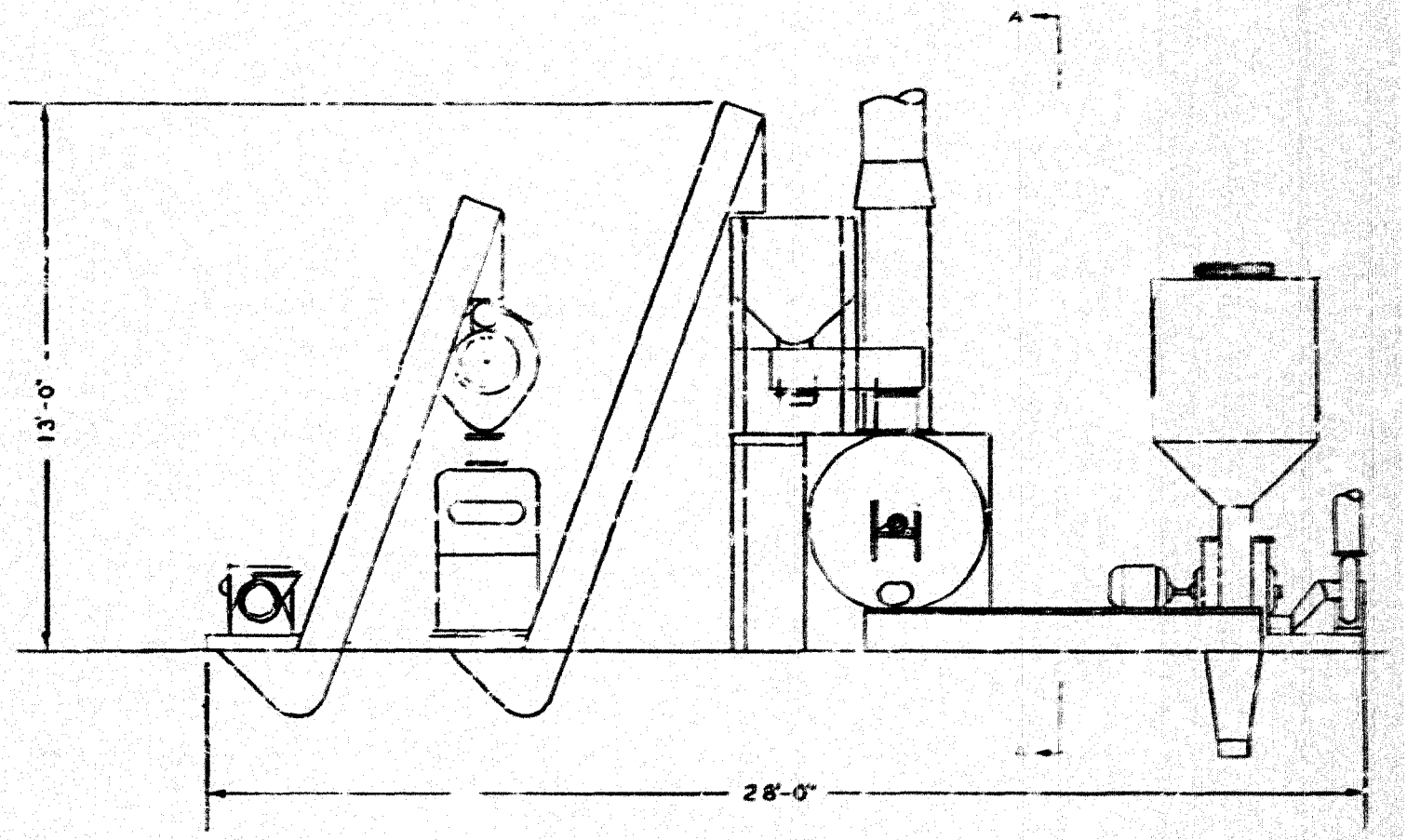


ELEVATION

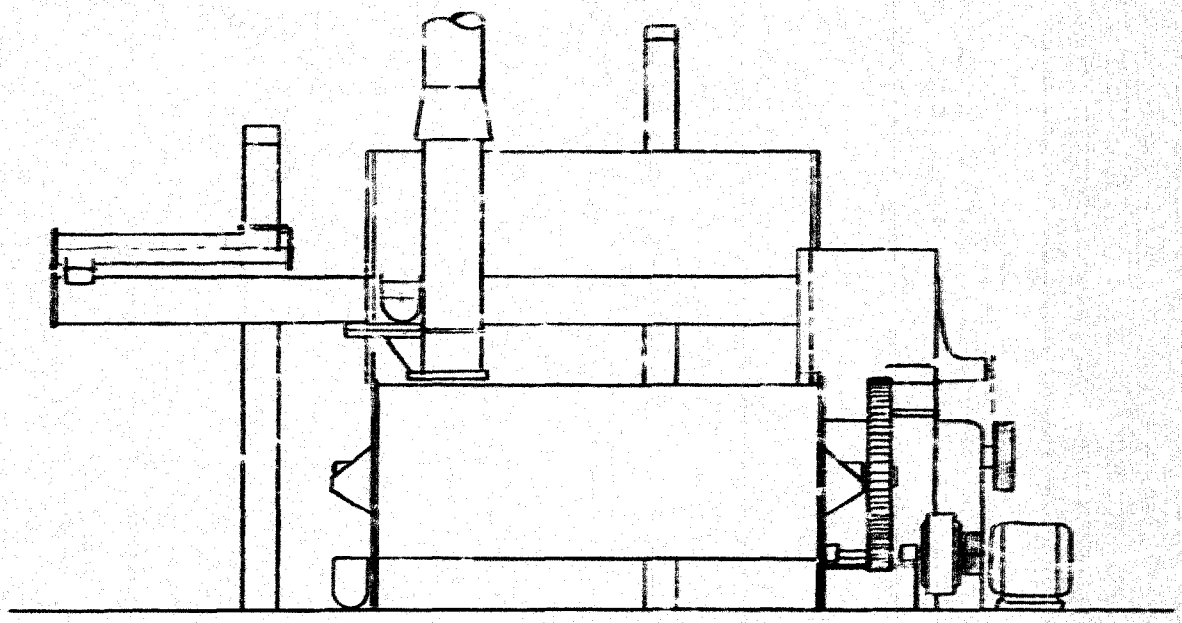

ELEVATION "A-A"