S. 353
.S4
-4

PLANT REQUIREMENTS FOR MANUFACTURE OF CASTOR OIL

TECHNICAL AIDS BRANCH

INTERNATIONAL COOPERATION ADMINISTRATION

Washington, D. C.

A.I.D.
Reference Center
Room 1656 NS

FOREWORD

This brochure is one of a series of reports resulting from overseas technical inquiries on factory or commercial establishments, operation, management and engineering. The report is designed to provide only a general picture of the factors that must be considered in establishing and operating a factory of this type. In most cases, plans for actual installations will require expert engineering and financial advice in order to meet specific local conditions.

Mention of the name of any firm, product, or process in this report is not to be considered a recommendation or an endorsement by the International Cooperation Administration, but merely a citation that is typical in its field.

Industrial reports prepared for ICA under special contract are customarily reviewed and edited before publication. This report, however, like other technical inquiry replies, has not been reviewed; it is the sole responsibility of the firm that prepared the report.

This brochure was prepared in August 1959 by Foster D. Snell, Inc., New York, New York, with technical guidance by the V. D. Anderson Company, Cleveland, Ohio.

* * * * * *

For further information and assistance, contact should be made with the local Productivity Center, Industrial Institute, Servicio, or United States Operations Mission.

Code Number
46

TABLE OF CONTENTS

	Page
Introduction	1
General Assumptions	1
The Castor Bean	2
Castor Oil	2
Castor Oil Derivatives	3
Manufacturing Processes - Castor Oil	3
Expression Plant Flow Sheet - Figure 1	6
Expression-Extraction Plant Flow Sheet - Figure 2	7
The Processing Equipment	8
Elevation of Castor Oil Expression Plant - Figure 3	10
Process Economics	12
Plant Investment	16
Estimated Production Costs	17
Castor Oil Derivatives	
Dehydrated Castor Oil	18
Batch Processing Kettle - Figure 4	19
Blown Castor Oil	20
Sulfonated Castor Oil	21

CASTOR OIL

INTRODUCTION

This report covers the procedures, plant equipment, and economics involved in the processing of 5,000 tons per year of castor beans to castor oil and oil derivatives. All costs presented are based on current United States prices and must be converted to correspond to the standards prevailing in the reader's country, to determine the estimated profitability of a plant of this size

GENERAL ASSUMPTIONS

In the presentation of cost data and the preparation of cost estimates, the following assumptions have been made:

1. The economic data shown are based on the processing of 5000 short tons of husked castor beans per year.

2. The average total oil content of the castor beans is 48 per cent by weight.

3. The plant will operate 24 hours per day, 300 days per year.

4. All equipment, material, labor, utility and other costs shown are based on current United States quotations and rates. These figures must be converted to local standards for proper evaluation.

5. It is assumed that utilities (water, sewers, power) and transportati facilities (railroad or highway) are already available at the plant site.

CASTOR OIL AND ITS DERIVATIVES

I. The Castor Bean

Castor oil is derived from the seeds of the plant Ricinus Communis, which occurs naturally in almost all tropical and near-tropical areas as a perennial. It is also widely found in temperate climates, but where frost occurs, the plant must be cultivated as an annual.

The seeds of the plant, commonly called castor beans, grow in clusters on spikes of the plant. The seed or bean itself is encased in a spiny outer shell, from which it may be separated by mechanically dehulling, or by sun-drying in the open until the casing splits. The bean itself consists approximately of 75% kernel and 25% husk. The oil content of the whole seed varies between 35-55%. A typical analysis will show: moisture - 5.5%; oil - 48.6%; protein - 17.9%; carbohydrate - 13.0%; fiber - 12.5%; and ash - 2.5%.

The oil is a rarity in nature, being almost a pure compound - about nine-tenths the glyceride of ricinoleic acid. The average fatty acid composition of castor oil is 86% ricinoleic, 8% oleic, 3% linoleic, and 3% stearic and dihydroxystearic.

Although the mealy residue of bean following oil extraction is high in protein (about 35%) it is not suitable for use as a foodstuff due to the presence of the toxic albumin ricin. The ricin may be deactivated to some degree by steaming or heating, but since the bean also contains heat-stable allergenic materials, it is advisable not to use it as a feed ingredient.

The major usage for extracted castor-bean meal is as a fertilizer -- for which use it is eminently suited. It releases its nitrogen content slowly, and is quite high in humus value. Further, the meal also contains several other elements of plant food.

Castor Oil

Two grades of castor oil are recognized in the United States. These are No. 1 oil, consisting of the first pressing (cold) of the oil seeds. This pressing is followed by bleaching and filtration with activated carbon or earths. The No. 1 oil is light in color, brilliant, and low in acidity. It is suitable for use in medicinal preparations.

The other grade of oil is No. 3. This is extracted from the press cake from No. 1 oil pressing by means of hydrocarbon solvents. The No. 3 oil is darker in color, and higher in acidity than cold pressed oil, and is considered unsuitable for medicinal purposes.

Castor Oil Derivatives

For uses other than medicinal or lubrication, castor oil may be processed in several ways:

1) Sulfonation: Treatment of castor oil with concentrated sulfuric acid yields the sulfonated (actually sulfated) ester known as "Turkey-red" oil. This product is an anionic wetting agent widely used in textile drying and finishing.

2) Blown or Oxidized Castor Oils: Bringing castor oil into intimate contact with air or oxygen at elevated temperatures produces an oxidized or partially polymerized oil in a wide range of viscosities, colors, and acid values. These oxidized oils are used as plasticizers or elasticizers in the manufacture of nitrocellulose films, artificial leathers and oilcloths.

3) Dehydration: The dehydration of castor oil can be controlled to yield two distinct types of material. One is the partially dehydrated oil which is soluble in mineral oil or glycols. Although this oil was once widely used as a lubricant it has been supplanted in recent years by specially "tailored" mineral lubricants. Its major present use is due to its low viscosity index -- in shock absorber fluids and brake and hydraulic fluids.

Fully dehydrated castor oil is an excellent drying oil, the equivalent of good tung oil. This dehydrated oil is the largest single present use of castor oil. The oil is dehydrated by heating to elevated temperatures, in vacua, in the presence of metallic salt catalysts.

4) Hydrogenation: The complete hydrogenation of castor oil yields essentially trihydroxystearin, m. p. 85-87°C., a waxy fat. Partial hydrogenations will yield intermediate melting point fats. Hardened castor oils are utilized in the manufacture of certain waxes, ointments and cosmetics. Hydrogenation is accomplished under H_2 pressure and moderately elevated temperatures in the presence of nickel catalyst.

5) Saponification: Saponified castor oil is used to a minor degree in the production of lathering soaps. More recently, it has been used in increasing amounts as a chemical intermediate and as a source of such dibasic organic acids as suberic, sebacic, and azelaic, used for manufacture of nylon-type polymers.

Manufacturing Processes - Castor Oil

Castor oil can be produced from the castor bean by two processes. One is straight mechanical expression, the other is mechanical expression followed

by solvent extraction of the press-cake. Purely mechanical expression produces a meal containing about 5.5% oil by weight. If this cake is solvent extracted, the oil content of the meal is reduced to 1.0%. The economics of an individual operation will determine whether a solvent extraction installation is practicable.

Under usual operating circumstances, the oil product from mechanical expression is of No. 1 grade, and that from subsequent operations is No. 3. Some plants operate for the production of a No. 1 grade of oil from the entire supply, under very closely-controlled conditions.

In general, process operations are as follows:

1. Dehusked beans from the field harvest are stored for use in controlled-humidity silos. Moisture content of beans in storage should not exceed 12% to avoid spoilage.

2. The day's run bin is charged by conveyers from the silo storage facilities with sufficient bean for that day's oil production.

3. The beans are cleaned by screening separated from tramp iron, and dehulled from the hard shells in an impact decorticator. The hulls and meats (kernels) are separated by aspiration.

4. The kernels are conditioned by cooking at 175°F. and 15% moisture, followed by drying to 4% moisture at 210°F. This conditioning facilitates separation of the oil from other constituents.

5. The conditioned kernels are then pressed in a continuous double-screw press which removes about 90% of the oil content. The press cake contains about 5.5% oil at 10% moisture.

6. The expressed oil is cooled, screened to remove larger particles of cake, and filtered with filter aid in filter presses. The product from these operations is No. 1 oil.

The press cake is either ground and sold as is, or, if economically feasible, is subjected to solvent extraction for recovery of the residual oil content.

These procedures are:

7. The press cake is prebroken, conditioned again to proper moisture and temperature conditions, and flaked to proper size between rolls.

8. The conditioned flakes are charged to a counter-current solvent extraction system for removal of the balance of the oil.

9. The solvent-wet meal from the extraction tower is heated in jacketed screw-conveyors for removal and recovery of its solvent content. The meal is then ground, screened and packaged; the solvent is recirculated.

10. The solvent-oil miscella is distilled and fractionated under vacuum to separate out the solvent. The solvent is recycled. The oil product is either combined with the press-product if pure, or stored separately for further use.

Figure 1

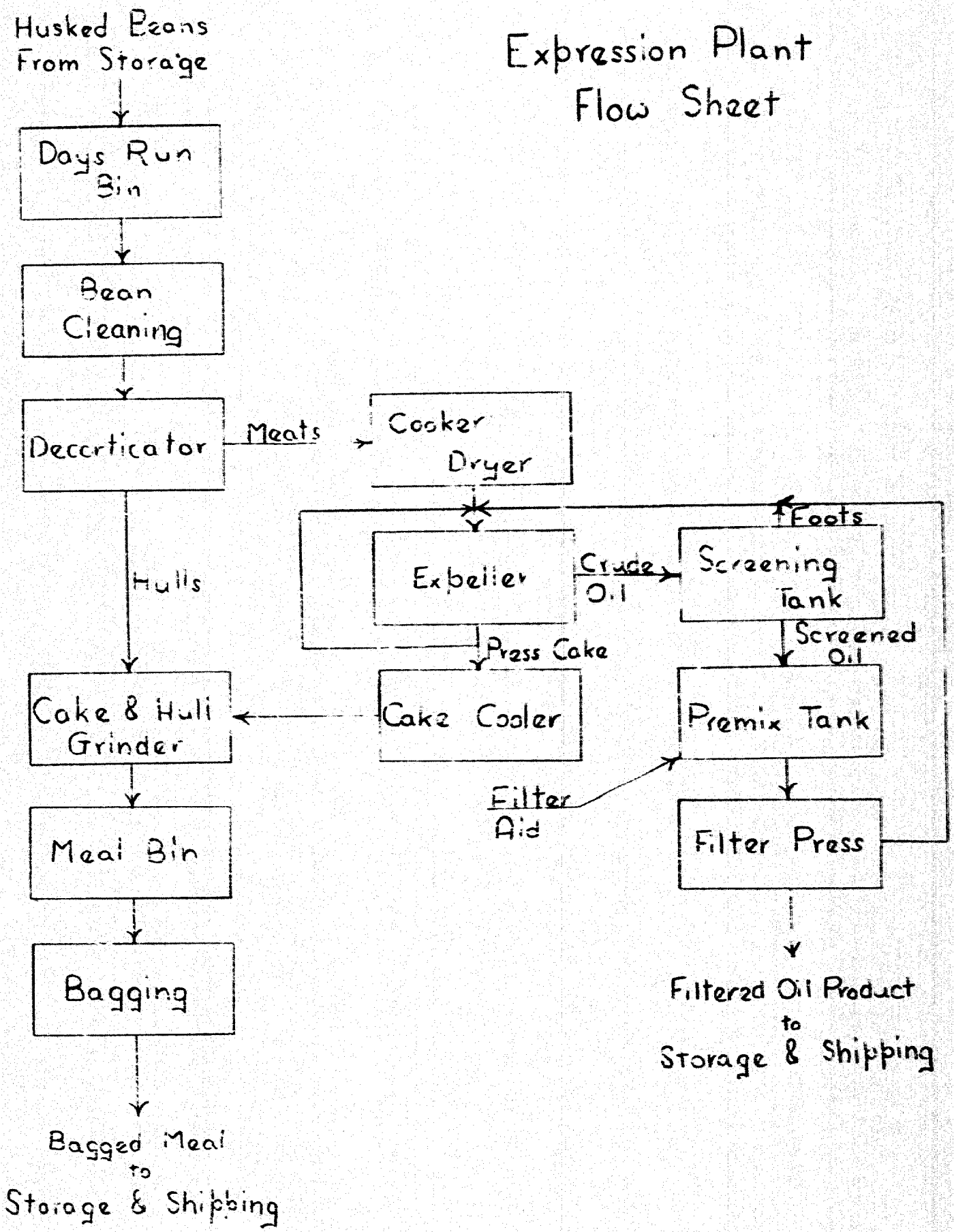
Expression Plant
Flow Sheet
Husked Beans
From Storage
Days Run
Bin
Bean
Cleaning
Decorticator
Meats
Cooker
Dryer
Hulls
Expeller
Crude
Oil
Screening
Tank
Foots
Screened
Oil
Press Cake
Cake & Hull
Grinder
Cake Cooler
Premix Tank
Filter
Aid
Filter Press
Meal Bin
Bagging
Filtered Oil Product
to
Storage & Shipping
Bagged Meal
to
Storage & Shipping

Expression - Extraction Plant Flow Sheet Fig 2

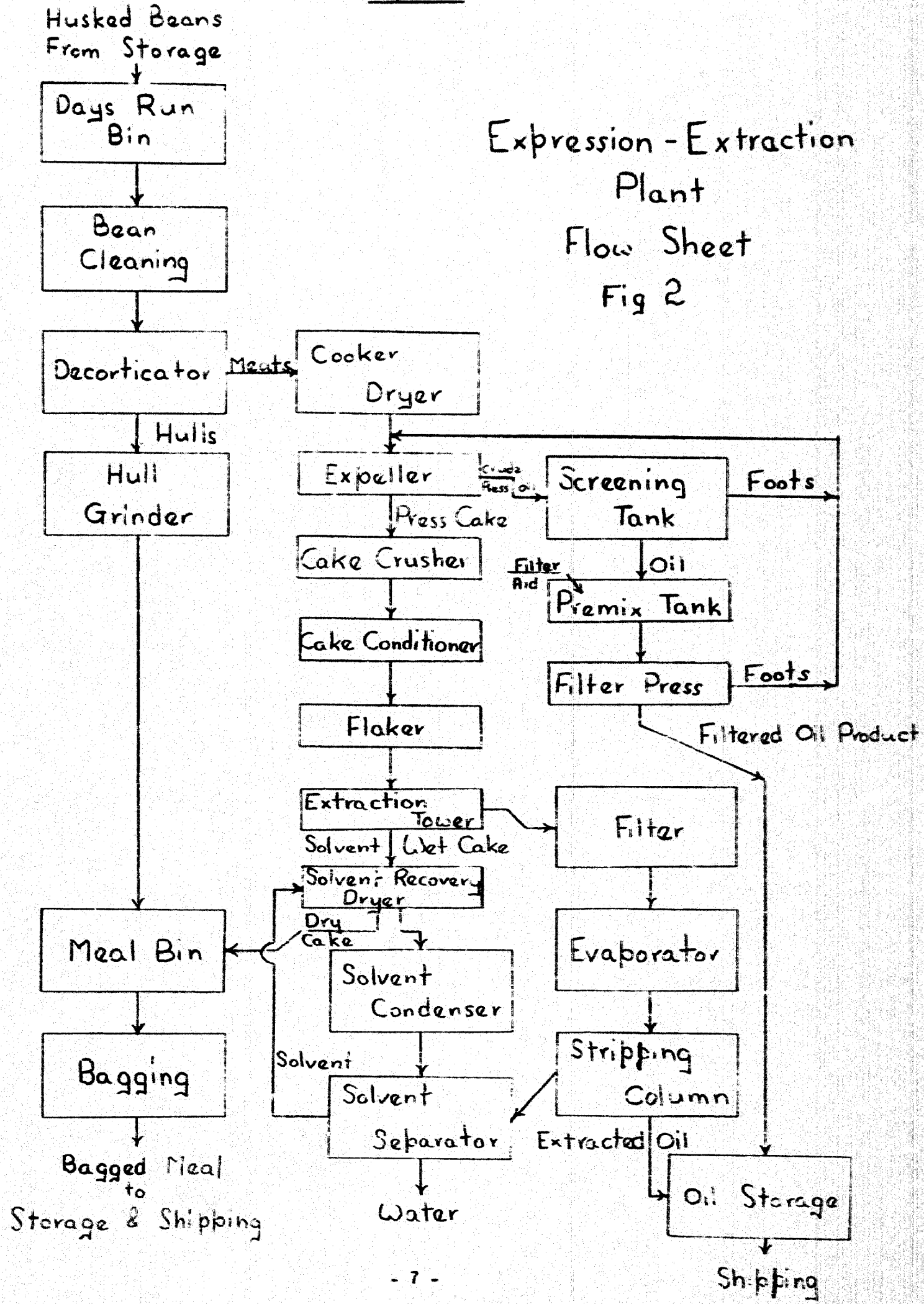

The Processing Equipment

Castor beans are generally purchased at harvest time, when prices are most favorable and stored for the year's use in silos. These silos, which must be specially designed units for control of moisture content, are often cooperative ventures between cultivators and processor.

This plant will process 5000 tons per year of castor bean, which is equivalent to a volume of about 267,000 cubic feet. A grain elevator of sufficient size to hold this amount of bean would be a series of 8 silos, structurally joined, each 21 feet in diameter by 100 feet in height. Since a structure of this magnitude would cost, in the U. S., approximately $250,000, it is obvious that no single small manufacturer could afford to carry its costs alone. Accordingly, for the purposes of this report, it is assumed that the bean storage facilities will be a joint venture between growers and processor, with 1/4 of the cost of these facilities borne by the processing plant.

Since the plant site should be centrally located in the bean-growing area, it is assumed that the bulk-storage silos will be located there. These silos will be direct-connected to the processing unit by continuous conveyors.

The silo discharge conveyors will move the raw bean to a plant bin having a capacity of 1000 cubic feet. This bin will hold sufficient beans for a full 24-hours' operation. The day's-run bin will discharge by elevating conveyors directly into a scale hopper which will record the actual weight of bean consumed in plant operations.

The scale discharge passes through a chute fitted with magnets for removal of tramp iron and falls into a series of vibrating screens for separation of dirt, stones, twigs, and other refuse.

The cleaned beans are conveyed to an impact mill which breaks away the hard outer shell from the oil-bearing kernels. The bean kernels are separated from the hulls in an air-blast. The hulls, being much lighter in weight, are carried away by the air-stream; the kernels fall to the bottom of the chamber and are collected. The hulls are collected in a cyclone separator and conveyed to the cake grinder for blending with the bean solids from the oil-removal system.

The de-hulled or de-corticated bean kernels are charged to the cooker-dryer unit for conditioning. This unit consists of a series of screw conveyors equipped with heating jackets and turning flights. Live steam may be injected for control of moisture. The unit is controlled automatically for maintenance of proper material characteristics.

The discharge from the cooker-dryer is conveyed to the press-conditioner. This is a long horizontal enclosed screw-conveyor with integral facilities for adjustment of feed-material temperature. This conditioner-conveyor feeds directly into the vertical screw of a double-screw press. The material is compressed at a given rate in the vertical chamber and is fed directly therefrom, at a predetermined pressure into the horizontal-screw barrel. Oil discharge from both horizontal and vertical press-barrels is collected and conveyed to purification facilities. The compressed cake, containing about 5-6% oil is discharged to a conveyor at the end of the barrel. The cake is cooled in a continuous cooler, ground together with the hulls from the decorticator and charged via conveyor to a bin for weighing and packaging.

The crude press oil, containing solid fines and some gelatinous solids is conveyed from the press to a settling tank equipped with a perforated-screen scraper-conveyor. The heavy solids and "foots" are settled out and removed automatically. These materials are returned to the press feed continuously, for reprocessing. The settled oil is drained off through a screen and pumped to the filter-press charge tank. Filter aid is added and the oil clarified by pumping through a filter press. The oil discharge from the filter is of No. 1 quality and is removed to storage, packaging, or further processing facilities. The filter press sludge is removed periodically and re-introduced into the screw-press feed in a slow but continuous feed.

Solvent Extraction

If a solvent extraction procedure is to follow pressing, the cake discharge from the horizontal barrel of the screw-press is conveyed to a sizing machine which breaks the press lumps into smaller pieces. The broken cake is charged to another conditioning screw (jacketed) for adjustment of temperature and moisture content to conditions proper for flaking and extraction. The conditioned pieces drop from the conditioner directly into the flaker. The flaking machine consists of a set of grooved rolls in an enclosed housing. These rolls rotate at different speed, the ensuing

Figure 3

ELEVATION OF CASTOR OIL EXPRESSION PLANT

Courtesy of the V. D. Anderson Company

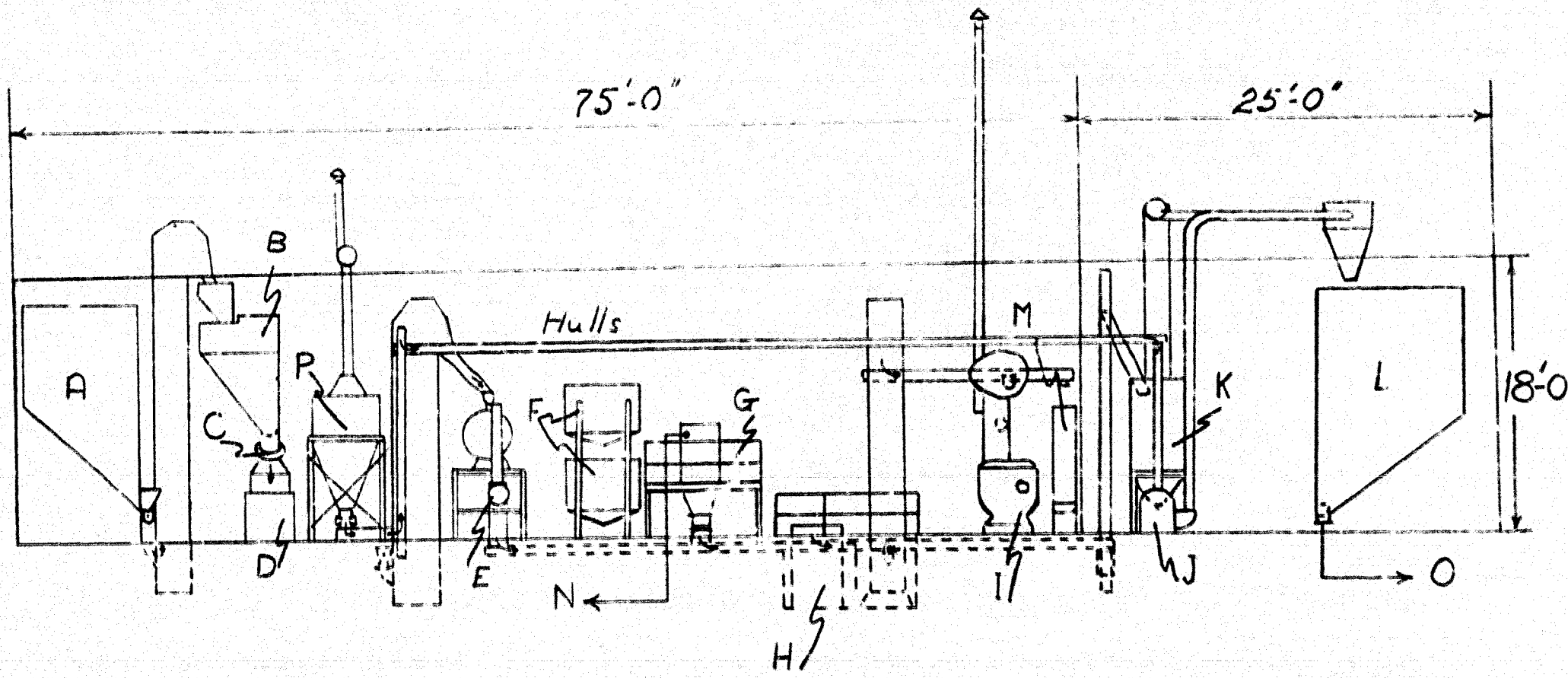

KEY

A. Days Run Bin
B. Batching Scale
C. Magnetic Cleaner
D. Screening Cleaner
E. Cooker-Dryer
F. Pressed Oil Tanks
G. Pressed Oil Filter Press

I. Expeller
J. Hull & Cake Grinder
K. Press-Cake Cooler
L. Meal Bin
M. Overflow Bin
N. to Oil Storage
O. to Bagging & Storage
P. Huller & Aspirator

shearing action forms the meal into flake form.

The conditioned, formed flakes are conveyed to the top of the extraction column in a slow-speed inclined convevor. This conveyor has flights designed for gentle handling of the flakes to avoid particle degradation. The solvent-extraction tower is a tall circular column fitted with perforated shelves along the vertical axis. Each shelf is scraped by a horizontal blade driven by a long shaft along the axis of the tower. Each shelf has an opening through which solids may fall to the shelf below.

The flakes are charged through air-locks at the top of the tower and fall through a chute to the top shelf of the extraction section. Fresh solvent (hexane, heptane) is pumped into the tower below the bottom shelf of the tower and flows upward through the shelf-spaces and through the falling flakes. At the top of the column the solvent, laden with extracted oil and fine particles, enters a tower section of diameter wider than the extraction section. The reduced flow rate causes most of the suspended solids to drop back into the extraction section. The solvent-oil miscella flows out through a pipe at the top fof this section into a storage-surge tank.

From this tank, the miscella is continuously discharged to the separation facilities. The first stage is pressure-filtration of the miscella in parallel tank filters to remove suspended solids. The clarified miscella is pumped to the bottom of a long-tube rising-film evaporator which heats the mass to its boiling point. Boiling liquid is removed from the top of the evaporator and charged to the top plate of a bubble-cap stripping column. The oil falls to the bottom of the stripping column losing solvent on the descent. Pure, solvent-free oil is discharged at the bottom of the column to storage.

The solvent vapors are condensed, settled to remove water, and returned to the extraction column.

The extracted meal is discharg ' from the bottom of the extraction column through a graded-screw conveyor which presses out a large portion of the solvent. The solvent-rich meal is conveyed to the top of a vertical bank of heated paddle conveyors. As the meal falls through this system, the solvent content is evaporated and removed to scrubbers and condensers. This solvent is separated from entrained water, combined with solvent from the miscella-separation stages, and returned to the extraction column.

The solvent-free meal is discharged from the solvent-recovery unit through a vapor-lock and is conveyed to a rotary cooler. This cooler restores the moisture content to atmospheric balance, and discharges the meal at ambient temperatures. The meal is mixed with hulls from the hull grinder, and stored in a surge bin prior to bagging.

Process Economics

The smallest solvent-extraction plant system available in the U. S. is designed to process 25 tons per day of castor beans. It is the considered opinion in the industry that the solvent-extraction system is not economic at lower capacities. Since labor costs do not influence extraction operations to a significant degree, it is likely that foreign operations at lower capacities will prove no more economic.

The economic balances shown below are based on an expression plant which will discharge pressed oil of first grade, plus a cake containing about 5-6% oil by weight. The plant will process approximately 1390 pounds per hour of husked castor beans, and will work 300 days per year, 24 hours per day.

The oil content of the bean is an average of 48% by weight, and the cake will contain an average of 5.5% oil by weight. The net production of oil by the modern expression techniques is approximately 450 pounds per 1000 pounds of bean processed. The meal discharged contains 55 pounds of oil per 1000 pounds of meal. The daily castor oil production for this plant will be about 15,000 pounds.

Raw Material

The plant will consume 5000 short tons of castor beans per year. At the currently quoted price of $0.063/pound, this amounts to an annual raw material cost of $630,000.00.

Buildings and Storage Facilities

The plant buildings will vary in type depending on the climate. In warm, temperate locales similar to Southwestern United States, open, shed-type construction is used, with only the open tanks and control sections completely enclosed. In general, light steel framework on a concrete base, with corrugated metal or fiber roofs and walls are suitable for enclosing this type of plant. Oil storage tanks may be in the open, as may drum storage areas. Storage facilities for bagged meal must be protected from the weather by light shed construction.

The process area, including all equipment required for processing the bean, oil, and meal can be enclosed in an open-framework, roofed shed 100' long by 30' wide by 20' high. An auxiliary building about 20' by 40' by 20' high will contain the steam generator, pumps, and utility connections. The bagged meal storage shed will be about 20 x 30 x 10' high. Two finished oil storage tanks should be provided, each with a capacity of 15,000 gallons.

It is assumed that the bulk bean storage silos will be owned jointly by the plant and farmers. The plant's share of this expense would be about $63,000.00.

The plant buildings (process, utility, and storage) are relatively inexpensive by U. S. standards. The total erected cost of these structures is estimated to be $35,000.00.

The two oil storage tanks may be installed for a cost of $11,000.00 for both.

Equipment Requirements for the Processing of 16 Tons/day of Castor Beans to First Grade Castor Oil.

No. of Units	Item	Price
1	Days run bean storage bin	$ 4,366.00
1	Bean charging scale	5,331.00
1	Bean cleaner	4,179.00
1	Hulling and separating unit (decorticator)	9,262.00
1	Cooker-dryer unit	14,028.00
1	Double-barreled oil expelling unit	23,467.00
1	Press-oil screening tank	5,181.00
2	Heat exchangers for circulating oil	908.00
1	Circulating oil pump	722.00
1	Unfiltered oil tank (steam heated)	584.00
1	Filter premix tank (steam heated)	584.00
3	Agitators for oil tanks	1,732.00
1	Oil clarifying filter press	3,406.00
2	Sets filter cloths	427.00
1	Filter hopper and mount	1,720.00
1	Filter press feed steam pump	705.00
1	Filtered oil surge tank	454.00
1	Air compressor	1,132.00
1	Filtered oil transfer pump	464.00
1	Bean overflow bin	534.00
1	Press-cake cooler	4,460.00

No. of Units	Item	Price
1	Mill exhauster for dust control	$ 1,156.00
1	Lot of convevors and bucket elevators	23,034.00
1	Cake and Hull grinder	2,700.00
1	Meal storage bin	4,087.00
1	Meal bagging scale	5,125.00
1	Oil-drum batch filling meter and pump	2,247.00
1	Process steam generator (30 HP)	6,120.00
1	Water cooling tower (40 gpm)	910.00
1	Water circulating pump	710.00
	Total Equipment Cost (Delivered to U. S. plant)	$ 129,735.00
	Plant installation (piping, wiring, etc) @ 40%	$ 51,894.00
	Total Installed Plant Cost	$ 181,629.00

Utility Requirements

1. Electricity: For power and lighting: 90-100 kilowatts.
   Daily power consumption = 2160 $\frac{\text{Kw-hrs}}{\text{day}}$
   Cost of electric power = $8,100.00/year

2. Steam - For process heating and humidification
   Daily requirement = 10,500 lbs./day
   Cost of process steam = $5.25/day or $1,575.00/year.

3. Water - a) For process cooling
   Requirement = 40 gallons per minute
   @ 25°F. recovery (recirculated)
   Cost = $0.60 per day or $180.00 per year
   b) For replacement of supply
   Requirement = 1,152 gallons per day
   Cost = $0.23/day or $69.00/year
   Total Utility Cost = $9,924.00/year

Labor

I. Direct Labor

Plant operations
(a) Expeller operation, one man/shift @ $2.50/hr.
(b) Plant helper, one man/shift @ $2.00/hr.
(c) Power plant and maintenance, one man/shift @ $2.25/hr.
(d) Packaging operations, two men/shift @ $1.85/hr.
(e) Receiving and shipping, one man/shift @ $1.50/hr.

II. Indirect Labor

(a) One general manager @ $9,500/year
(b) One clerk/shift @ $3,900/year
(c) One plant supervisor/shift @ $6,000/year
Total Labor Cost per year = $113,768.00

Materials and Supplies

1. Oil drums, 55 gal. each, re-usable, @ $57,360.00/year
2. Sacks, 100# capacity each, @ $0.25 each, @ $12,000.00/year
3. Replacement parts for expeller, $2,750/year
4. Miscellaneous supplies @ $2,500/year

Total Supplies $74,610.00/year

Revenue

Castor oil sells for $0.1575/pounds in tanks, and $0.215/pound in drums. For purposes of this report, it is assumed that 75% of the plant production will be sold in returnable drums and 25% in tank lots.

Total plant production will be about 4,500,000 pounds of oil per year. Total expected revenue of all oil sold as such will be $902,812.00.

Castor meal, expressed, sells for approximately $35.00 per ton. Total plant production will be about 5,500,000 pounds or 2,750 tons/year. Total expected revenue from meal sales will be $96,250.00.

Maximum Plant Income = $999,062.00/year.

Sales expense @ 5% of sales = $50,000.00/year.

Fixed Capital Costs

(a) Storage silo	$ 63,000.00
(b) Plant buildings and storage	46,000.00
(c) Installed plant equipment	181,629.00
(d) Ancillary services	15,000.00
Total Estimated Fixed Costs	$ 305,629.00

Working Capital

Raw materials (six months' supply)	$ 315,000.00
Product inventory (two weeks)	38,360.00
Accounts receivable (30 days)	99,900.00
Labor costs (30 days)	11,377.00
Selling expenses (30 days)	5,000.00
Total Estimated Working Capital	$ 469,637.00
Total Estimated Plant Investment	$ 775,266.00

Estimated Production Costs

Raw materials	$ 630,000.00/year
Labor	113,768.00
Utilities	9,924.00
Supplies	74,610.00
Depreciation	25,283.00
Selling expense	50,000.00
Total Cost, Exclusive of Taxes and Insurance, etc.	$ 903,585.00
Estimated Profit Before Taxes	$ 95,477.00

Safety Precautions

Castor beans contain an allergenic substance, ricin, towards which some persons react most adversely. All workers for a plant of this type must be screened by medical examination to insure that they will not be affected seriously by contact with the process materials.

Further, all screening and grinding equipment must be enclosed or hooded such that fine castor meal will not be carried into the processing area. The discharges from the hoods should be ducted to cyclone separators to remove as much of the dust as possible. The cyclone air discharge should be blown up through high stacks to insure dilution and dispersal in the atmosphere.

Castor Oil Derivatives

I. Dehydrated Castor Oil

The primary use of dehydrated castor oil is in coatings, as a good drying oil. Characteristics of three types of dehydrated castor oil are shown in the following table:

	Type		
	Unbodied	Medium Body	Heavy Body
Specific gravity, $\frac{15.5}{15.5}$	0.938 - 0.941	0.944 - 0.948	0.953 - 0.958
25°C. Viscosity (poises)	1.8 - 2.4	6.2 - 8.8	40
Color (gardner, max.)	6	6	6
Acid value	3 - 6	3 - 6	3 - 6
Iodine value (wijs)	125 - 135	120 - 130	112 - 118
Saponification value	188 - 194	188 - 194	188 - 194

Dehydration and polymerization to any degree of body may be carried out in a standard closed reactor on a batch scale. The oil and catalyst are charged to the reactor and heated to 250 - 300°C. under a vacuum of 25 - 40 mm of mercury. The catalyst concentration may vary between 0.1 - 0.5% by weight of oil, and the time of reaction will depend on the viscosity desired. For medium-bodied oils a temperature of 280°C. for 2 - 3 hours is used.

The catalysts used are 98% sulfuric acid, diethyl sulfate, boric acid, etc., and may be added directly to the oil prior to heating, or mixed with a small amount of cold oil, and added to the mass to be treated after the mass has reached the reaction temperature. The dehydration procedure causes a loss in weight of 12 - 16%.

Equipment

The dehydration procedure may be conveniently carried out in a direct-fired closed vessel fitted with bottom outlet and top cover inlets. A condenser is fitted to an outlet top and the condensate receiver connected to a vacuum pump or steam-jet ejector. A high-speed agitator should be fitted to the vessel through a tight gland. Figure 4 shows a schematic drawing of a system for production of dehydrated castor oil.

Labor Requirements

One man can supervise this operation, including control work. A full batch of 200 - 500 gallons (1500 - 4000 pounds) can be processed in four hours time, including charging and discharging of the vessel.

Batch Processing Kettle
(Direct Fired)

Fig 4

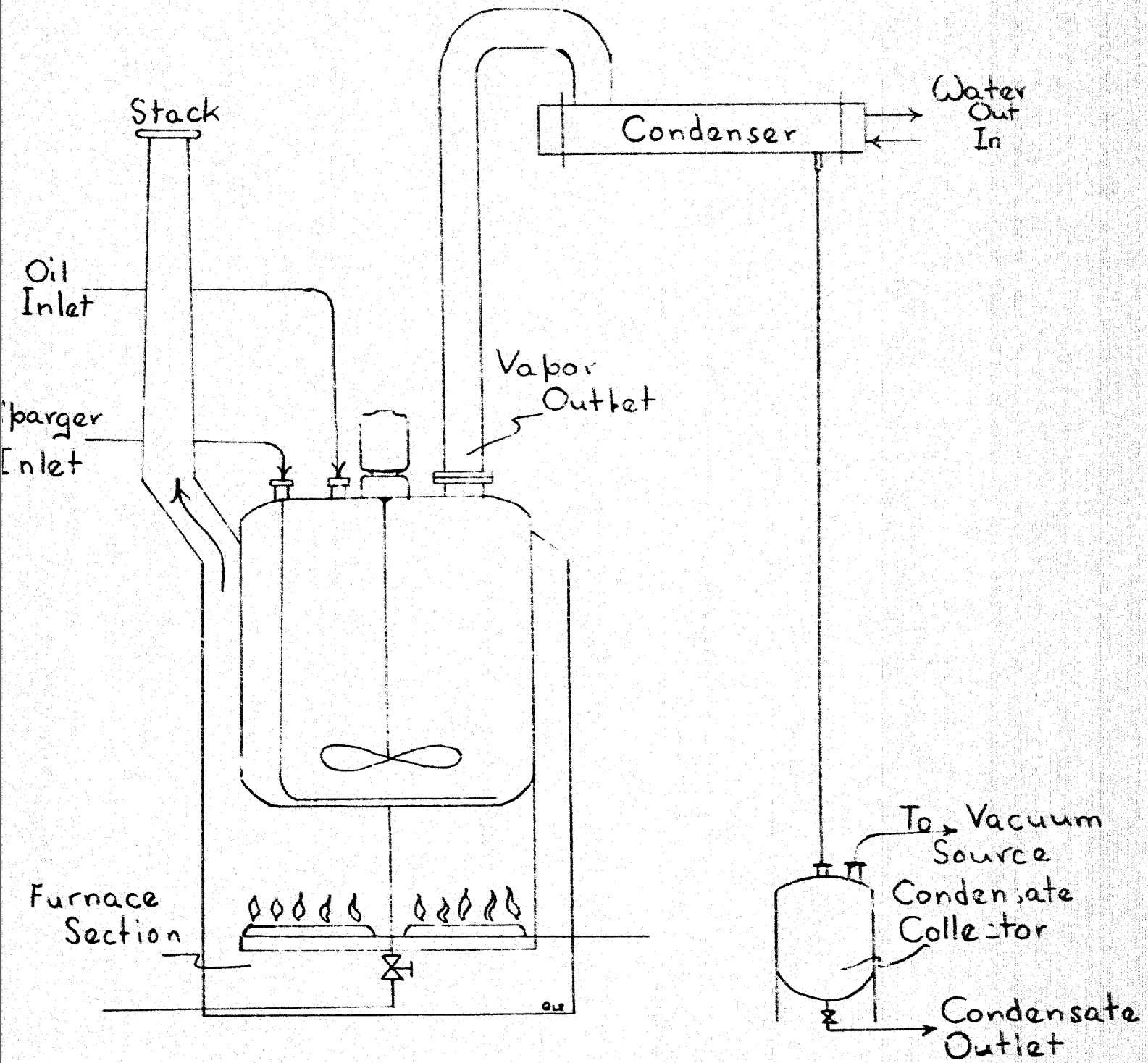

Utility Requirements

These requirements will depend entirely on the size of the batch in process. For an average batch of 300 gallons (about 2500 pounds) utility requirements will be:

1. Cooling water: 1500 gallons or 0.6 gal. /pound of batch
2. Fuel: equivalent of about 1 million BTU or 400 BTU/pound
3. Power: 8 kilowatt-hours or 0.0032 Kwh/pound

Economics

The economics of operation will depend on the batch size. For estimation purposes, a batch time (independent of size) of four (4) hours is assumed.

Raw material requirement will be approximately 1.15 pounds of light-colored castor oil per pound of dehydrated oil product. Also required will be about 0.003 pounds of catalyst per pound of dehydrated oil product. Castor oil cost may be assumed to be the production cost of the plant described in Section I of this report, or may be calculated on a purchase price basis. Dehydrated castor oils are presently selling in the United States for about $0.245 per pound. Catalyst costs will average about $0.15 per pound.

Equipment cost depends on the desired batch size. For a batch size of 300 gallons (2500 pounds) the installed process equipment cost will be about $15,000.00.

Labor requirements will be 4-semi-skilled man-hours per batch +0.5 man-hours of super vision, or approximately $10.50/batch.

The unit cost of production may be calculated from the above costs, varying with batch size.

II. Blown Castor Oil

Blown, or oxidized castor oils are used widely as plasticizers in lacquers, oilcloths, artificial leathers, etc. These oils are of heavier viscosity than raw castor oil, and show less tendency to exude from films under heating. They are used primarily in nitrocellulose products, wherein they contribute gloss, elasticity, and adhesive strength.

The oxidation of castor oil may be accomplished in several fashions. The simplest way is to sparge a stream of compressed air into the bottom of a heated vessel in such a manner that small air bubbles will be thoroughly

mixed with the mass of oil. The temperature of the oil will be maintained at 180° - 270°F. by means of the vessel steam or fire jacket. If a plant is to produce both dehydrated and oxidized castor oil, the same equipment may be used alternately for both procedures. Other systems which can be employed would be continuous counter current absorption towers utilizing bubble-cap trays or tower packing to afford the required oil-gas contact surface.

Blown castor oils may be produced in a wide range of characteristics, as is shown in the table below. Generally speaking, the heavier the viscosity, the higher the specific gravity, saponification and acid values, and the lower the iodine value.

Specific gravity $\frac{15.5}{15.5}$	0.975 - 1.040
25°C. viscosity (poises)	11 - 200
Color	Pale yellow to dark reddish-amber
Acid value	5 - 25
Saponification value	190 - 245
Iodine value (wijs)	82 - 60

Economics

There are too many variables in this operation to specify the cost of production for blown castor oils. In general, the operation will be performed on a batch basis, and the costs listed for dehydrated castor oil will be applicable in this case, since time, labor, heat, power, and raw material costs will be essentially the same.

In the United States, blown castor oils sell for approximately $0.25/pound.

III. Sulfonated Castor Oil

Turkey-red oil is widely used as an anionic wetting agent in the dyeing and finishing of cotton and linen. It is manufactured by treating raw castor oil, at room temperature (less than 35°C.), with concentrated sulfuric acid, for a period of 3 - 4 hours. Acid in the amount of 15 - 30% of the weight of the oil is used, the exact quantity depending on the product desired.

Following the reaction period, the mass is diluted with water, forming two layers. The oil layer is decanted, and neutralized with caustic solution. It is then washed again with water to remove traces of caustic.

This reaction is a very simple one, requiring only an open vessel fitted with cooling water coils and a high-speed agitator. It is estimated that such a vessel could be made and installed for less than $3,000.00.

The acid is run in continuously over the reaction period so as to avoid an excess which might char the oil, and the reaction temperature is controlled by regulating the flow of water to the cooling coils. This can be done manually, or by automatic controls.

Economics

This process is also conveniently done on a batch scale, similarly to those described above. Since no heating is involved, there is no fuel requirement in the operation. Power requirement will be approximately 50% of that required for dehydration, since no recirculation or vacuum systems need be employed.

Labor requirements per batch will be essentially the same as those stated above, or about $10.00 per batch.

Approximately 1.05 pounds of castor oil and 0.25 pounds of concentrated acid are needed for the reaction, to produce 1.0 pounds of turkey-red oil. Neutralization will require about 0.02 pounds of caustic per pound of product.

Turkey-red oil sells in the United States for $0.62/pound. Sulfuric acid and sodium hydroxide cost $0.15/pound and 0.20/pound, respectively in l.c.l. quantities.

Raw material cost per pound of product will be approximately $0.22, based on sales prices.

Depending on the batch size, overall process economics may be estimated from the above.

Consultants in Castor Bean Processing

V. D. Anderson Company, Cleveland, Ohio
Allis-Chalmers Manufacturing Company, Milwaukee, Wisconsin
The Blaw-Knox Company, Pittsburgh, Pennsylvania
The French Oil Mill machinery Company, Piqua, Ohio
Foster D. Snell, Inc., New York 11, New York

SET:GB
Oz. 8