AGENCY FOR INTERNATIONAL DEVELOPMENT
WASHINGTON, D. C. 20523

BIBLIOGRAPHIC INPUT SHEET

FOR AID USE ONLY
Batch 88

1. SUBJECT CLASSIFICATION

A. PRIMARY: Development and economics — DM00-0000-0000

B. SECONDARY: Industries and industrialization

2. TITLE AND SUBTITLE

Plant requirements for manufacture of bottled oxygen and acetylene

3. AUTHOR(S)

(101) Mayer (Frank) Engineering Co.,Los Angeles

4. DOCUMENT DATE	5. NUMBER OF PAGES	6. ARC NUMBER
1962	~~84p.~~ 102P.	ARC 665.8.M468

7. REFERENCE ORGANIZATION NAME AND ADDRESS

AID/TA/OST

8. SUPPLEMENTARY NOTES (Sponsoring Organization, Publishers, Availability)

(Plant requirement no.96)

9. ABSTRACT

10. CONTROL NUMBER

PN-AAF-728

11. PRICE OF DOCUMENT

12. DESCRIPTORS

Acetylene
Industrial plants
Manufacturing
Oxygen
Requirements
Small scale industries

13. PROJECT NUMBER

14. CONTRACT NUMBER

AID/TA/OST

15. TYPE OF DOCUMENT

AID 590-1 (4-74)

FOREWORD

This brochure is one of a series of reports resulting from overseas technical inquiries on factory or commercial establishments, operation, management, and engineering. The report is designed to provide only a general picture of the factors that must be considered in establishing and operating a factory of this type. In most cases, plans for actual installations will require expert engineering and financial advice in order to meet specific local conditions.

Mention of the name of any firm, product, or process in this report is not to be considered a recommendation or an endorsement by the Agency for International Development, but merely a citation that is typical in its field.

This report was prepared by the Frank Mayer Engineering Company, 6442 Santa Monica Boulevard, Los Angeles, California for the technical aids program through the facilities of the Office of Technical Services, U. S. Department of Commerce.

* * * * * * * * * *

For further information and assistance, contact should be made with the local Producitivity Center, Industrial Institute, Servicio, or United States Aid Mission.

Code Number
PR 96

March 1962

ACKNOWLEDGMENT

The author gratefully acknowledges the cooperation, assistance and technical information provided for the preparation of this report by the engineers of:

Air Reduction Pacific Company,
Division of Air Reduction Company, Inc.
660 North Baldwin Park Boulevard
Industry, California

The Aluminum Company of America
1145 Wilshire Boulevard
Los Angeles 17, California

Ingersoll-Rand
2456 East 55th Street
Los Angeles, California

The Linde Company
Division of Union Carbide Corporation
2770 Leonis Street
Los Angeles, California

The assistance of Mr. H. O. Anderson, Air Reduction Pacific Company, in reviewing the manuscript is also appreciated.

TABLE OF CONTENTS

	Page
Introduction	1
General Assumptions	1
Product Specifications	2
Production Capacity	2
Methods of Producing Oxygen	3
General Principles	3
The Linde Process	5
The Claude Process	6
Description of Plant	7
Availability of Equipment	16
Shipping and Shipping Containers	19
Plant Operation	21
Power Requirements	21
Cooling Water	25
Air Filter	26
Air Compressor	26
Air Purifier	27
Aftercooler	28
Air Dryer System	28
Heat Exchanger	29
Air Expansion Engine	30
Air Fractionating Column	30

Liquid Oxygen Pump 30

Oxygen Manifold and Vacuum Pump 30

Number of Operators Required 31

Instrument Observation and Performance Records 31

Operating Hazards 31

Production of Acetylene 32

General Principles 32

Description of Plant 35

Gas Generators 35

Vacuum System 38

Filter Box or Purifier 38

Gas Dryer 39

Acetylene Compressor 39

Sludge Disposal 40

Building 41

Electrical 42

Carbide Storage 42

Cylinder Charging Equipment 43

Acetylene Charging Manifold 44

Cylinder Charging and Shipping 44

Heating 45

Plant Area 45

Availability of Equipment 46

Plant Operation 47

Water Supply 47

Charging the Generators 48

Storage and Usage of Carbide 48

Warning Signs and Fire Extinguishers 48

Direct Materials 50

Supplies 50

Plant Layout 50

Plant Site 51

Buildings 51

Power 51

Water 52

Fuel 52

Production Equipment 52

Furniture and Fixtures 53

Direct Labor 53

Indirect Labor 54

Depreciation 54

Manufacturing Overhead 55

Manufacturing Cost 55

Fixed Assets 56

Working Capital 56

Capital Requirements 57

Sales Revenue 57

Recapitulation of Costs, Sales and Profits 58

Budget Control 59

Budget Control Accounts 60

Purchase Requisition Form 61

Voucher Check 62

Engineers 63

Training 64

Safety 65

Other Considerations 66

Materials and Supplies 66

Market Factors 66

Export Markets 67

Marketing Problems 67

Economic Factors 68

Personnel 68

Laws and Regulations 69

Financial Factors 69

Financial Requirements of the Project 69

Short Term Bank Credits 70

Financial Plan 70

INTRODUCTION

This report outlines the basic processes, plant requirements and economic factors involved to establish a small plant in a foreign country for the production of oxygen and acetylene for commercial use.

GENERAL ASSUMPTIONS

The following basic assumptions must be made to arrive at realistic estimates:

1. Costs of buildings and general facilities are based on United States prices.

2. Material costs are based on United States prices.

3. Labor costs represent current averages for industry as published by the United States Bureau of Labor Statistics.

4. Adequate electric power and water are available at the plant site.

5. The plant site is served by adequate transportation facilities.

6. The plant will operate on a continuous day and night basis, six days per week and fifty weeks per year.

7. No special provision is made for training personnel.

8. Since the following items cannot be estimated realistically, general estimates will be made in order to establish the costs. Adjustments in costs should be made in all cases to conform to local conditions.

   A. Land value
   B. Distribution and selling costs
   C. Freight charges
   D. Administrative costs
   E. Taxes
   F. Utilities

9. Columns are provided in the tables of the report to facilitate the conversion of costs to local standards.

PRODUCT SPECIFICATIONS

All information and cost figures are based on producing commercially pure oxygen and acetylene. Oxygen must be 99.5% pure.

PRODUCTION CAPACITY

The plant specifications contemplate the production of 150 bottles of oxygen and 150 bottles of acetylene per day.

METHODS OF PRODUCING OXYGEN

General Principles

Oxygen may be commercially produced by two widely different methods, the selection of which is governed by the use of the gases associated with this element, when it is produced as a primary end product.

The first of these processes is that of electrolysis, if hydrogen is the by-product desired. In this process a current of electricity is passed through an alkaline solution of 15% Na OH or its equivalent, say KOH, in water. The current in passing through this solution disassociates the oxygen from the hydrogen, each of which gathers at its respective pole from which it may be collected.

Since the production of hydrogen is not required, this process will not be considered.

The second process is the production of oxygen by fractional distillation of liquid air. In this process the principal by-product is, of course, nitrogen.

The two best known commercial methods are the Claude or Heylandt system and the Linde, either of which is used to liquefy air as the first stage of production. These systems are alike, to the extent

that they both employ the principles of air compression, the cooling of the compressed air and the Joule-Thompson effect for final liquefaction. However, the systems differ somewhat in the type and arrangement of equipment as may be seen by a comparison of the two basic schematic flow diagrams.

In each system, dry air, free of carbon dioxide is compressed from atmospheric pressure p_1 to an intermediate pressure p_2, under which condition it may be cooled by water in a heat exchanger, or by combination with partially pre-cooled air at the same pressure or by both water and air, depending upon operating conditions.

This cooled compressed air is then compressed to a much higher pressure, after which all moisture is removed from it by passing it through a drying tower containing a suitable desiccator. It is then passed through a heat exchanger in which it is cooled, after which it is suddenly expanded into a vessel through a throttling valve, which reduces its pressure from the high to the intermediate pressure, or that existing between the low and high pressure stages of compression.

Up to this phase of the process, both systems are alike.

The Linde Process

From the standpoint of plant equipment, the Linde is perhaps the most simple system; inasmuch as this is purely a thermal process involving heat exchangers only, no air expansion engine or its associated equipment being required.

Referring to Figure 1 in this system, the cold air is expanded into a closed vessel known as a rectifier or fractionating column. As the result of this expansion, its temperature as well as its pressure is reduced so that it enters the column as a mixture of liquid and heavily saturated vapor. The liquid collects in the bottom of the column, which also functions as a separator to separate the liquid from the saturated vapor; the latter may be re-cycled to contribute to the cumulative process as the result of which the proportion of liquefied air is steadily increased.

99.5% pure oxygen may be withdrawn from the column for final disposition, while the nitrogen fraction may be either bled off to the atmosphere or conserved for sale as may be indicated by economic circumstances. The small percentage of argon is the first fraction to boil off the liquid air, inasmuch as its boiling point is -188°C (-306°F) or 22°C (40°F) above that of nitrogen, the next fraction to be distilled from the liquid air. This small amount of argon is usually bled off and dissipated.

The Claude Process

In the Figure 2 illustrating Claude process, the air is compressed in two stages as shown in the schematic. It differs from the Linde process in that after being pre-cooled in the first heat exchanger, part of this compressed air partially by-passes a second heat exchanger and is led into an expansion engine to further lower the temperature by the performance of work within the engine; the intent of this procedure is to pre-cool the gas to a temperature just above that of condensation, rather than to actually perform any useful work.

The remainder of the air continues through the second heat exchanger and also a third one, both of which serve to further cool the air stream by transfer of heat to the counterflow of cold air from the final expansion chamber, or fractionating column.

After leaving the third heat exchanger, final liquefaction is achieved by expansion as the result of throttling into the column. As in the Linde process, the pressure within the vessel is maintained at the required low value by evaporating part of the nitrogen fraction of the liquid air and discharging it to the atmosphere. This evaporated air is passed through the third exchanger, in a direction counterflow to the incoming air, as the latter passes to the expansion valve. The heat picked up in this exchanger is somewhat compensated for by the cold air exhausted from the expansion engine, with the result

As the result of this heat exchange, the oxygen leaves the Heat Exchanger as warm compressed gas which may be fed directly to the Cylinder Charging Manifold or to oxygen storage from which it may be later withdrawn.

11. The OXYGEN CHARGING MANIFOLD comprises a system of piping, consisting of a horizontal length of 2" pipe fitted with flexible "pigtails" of copper tubing and valves. The manifold may be constructed to charge twenty cylinders simultaneously arranged as shown in Figure 4.

Each of the two sections of the manifold must be fitted with special valves, capable of withstanding a pressure of 5,000 lbs. per sq. in. (350 kg. per sq. cm.).

For continuous operation a ten cylinder manifold would be required. For a charging period limited to eight hours per day, a twenty station manifold would be necessary to load the full complement of 150 cylinders per day. Should the latter schedule be selected, additional facilities would be required to store the oxygen during the periods between loadings.

Such storage facilities would consist of a steel pressure sphere or cylinders together with means for reducing the high pressure and also measuring the flow of the gaseous oxygen for shipment. It will be noted that besides the oxygen feed line, the manifold is equipped for evacuation by a vacuum line for the purpose of evacuating air, etc., from the cylinders as a preliminary to charging with oxygen.

12. INSTRUMENTATION necessary for proper operation include as a minimum, indicating pressure gauges to indicate pressure at each of the following points:

    a) High pressure air immediately ahead of the Air Expansion Valve.

    b) Pressure within the lower region of the Air Fractionating or Rectifying Column.

    c) Pressure within the upper region of the Rectifying Column.

    d) Pressure of the finished oxygen.

A thermocouple type of temperature indicator should be provided for the measurement of important temperatures, such as those at the various stages of the process and within the Rectifying Column.

that the evaporated air mixed with this exhaust can continue on through the second and first exchangers before being released to the atmosphere or re-cycled to the intake of the compressor.

DESCRIPTION OF PLANT

The principal components essential to the construction of a commercial plant for the production of oxygen are -

1. An AIR COMPRESSOR capable of compressing air to a high pressure. Such a compressor may be designed with several stages of compression, but with at least two, to attain a final minimum discharge pressure of 3,000 lbs. per sq. inch gauge (or 210 kg per sq. cm.). It may be driven by any suitable means capable of furnishing the required power; however, for several reasons, electric drive is generally favored.
2. An AIR FILTER, placed ahead of the compressor intake should be provided to remove dust and other solid impurities. This filter is usually of the multi-cellular type and may be either dry or oiled; it is so designed as to permit the changing of cells without affecting the flow of air into the compressor when the cells become clogged with dust and particulate matter.

3. An AIR PURIFIER should be inserted in the compressed air stream, at an intermediate pressure point after the heat of compression has been removed from the air in an inter-cooler. This inter-cooler may be incorporated into the structure of the compressor or may be a separate unit. The Air Purifier is usually in the form of a "scrubbing" tower or towers through which the compressed air is passed in counterflow to a recirculated spray of caustic solution. This solution serves to remove carbon dioxide from the air by the reaction of the carbon dioxide with the caustic to form water-soluble carbonate. Circulation of the solution is accomplished by an electrically driven pump.

A mixing and storage tank should be included with this part of the system for use in mixing fresh caustic solution. Such fresh solution may be transferred into the circulating system by suitable connections with the circulating pump.

This particular operation is quite important; otherwise, the carbon dioxide, normally present in atmospheric air, would precipitate as a solid under the low temperatures

later encountered in the system; however, after its removal the compressed air may be further compressed until it reaches the desired maximum pressure.

An alternate method of removing carbon dioxide is by means of a filter located in the liquid oxygen line immediately after the latter leaves the column as shown in the schematic flow sheet Figure 3A.

4. An AFTERCOOLER, in which the heat of compression may be removed from the high-pressure air, usually by water, is inserted downstream from the compressor. This after-cooler serves to pre-cool the air which contains an appreciable but variable amount of moisture in the form of water vapor. This moisture must be removed.

5. An AIR DRYER is the next piece of equipment required to remove this water vapor. This equipment includes a separator which serves to knock the entrained moisture and oil out of the air stream, prior to the entry of the latter into the drying tower.

There should be two of these vessels connected in parallel, each containing a desiccator, so that one of these may be on stream while its twin is being reactivated by heat

which may be supplied from any conveniently available source, electrical, steam, or by heat exchange of the process air or gas as it progresses through the system.

Other equipment associated with the air dryer includes a blower, usually of the electrically driven positive displacement type, to force dry air or gas through the dryer's heater and the adsorbent or desiccating medium, to reactivate this medium.

6. A THREE SECTION HEAT EXCHANGER is a most important piece of equipment. The first section of this exchanger could be used in connection with the reactivation of the Air Dryer, while the second section would further cool the air after it has been dried in the Dryer.

A portion of thi~ air stream is sometimes used for driving an engine which in turn drives an electric motor; under such conditions the motor acts as an electric generator and its output may be used to reduce the amount of power normally required to operate the system.

7. This EXPANSION ENGINE, besides serving to reduce the total power demand of the plant, also serves to further cool this portion of the air stream by the removal of the

heat used in performing work. This cooling is so effective that the air so expanded may be re-introduced into the main air stream after it has passed through the throttling or expansion valve.

8. An AIR EXPANSION VALVE - by throttling the cold high pressure air to the lower pressure within the Rectifying or Air Fractionating Column - utilizes the Joule-Thompson effect, an effect which may be measured by the decrease in temperature for each unit decrease in pressure, while the total heat of the system remains at a constant value.

   The effect of this expansion therefore, is to lower the temperature of the gas, through that of its vapor phase to the temperature necessary to liquefy the air. As a result, the air issues from this valve as a mixture of liquid and heavily saturated vapor. It is at this point that the extremely cold air exhausted from the expansion engine should be returned to the flow stream, immediately prior to its entrance into the Fractionating Column.

9. A RECTIFYING OR AIR FRACTIONATING COLUMN is a vessel fitted with internal baffles, so designed as to trap the lighter element, nitrogen as it boils out of the liquid

air at a temperature of 210°C below zero (-346°F), or 8°C (14°F) above the boiling point of the remaining oxygen fraction.

The baffles should be so designed as to segregate the relatively lighter nitrogen, which tends to rise to the top of the column leaving the heavier oxygen at the bottom of this vessel. This segregation may be further facilitated by a baffle or partition which would completely divide the column into two distinctly separate regions - the lower region being at the pressure under which the liquid air is contained, while the upper would be maintained at a lower pressure and would contain liquid oxygen, together with some nitrogen vapor. The latter would enter this upper region through an expansion valve in a line which could bleed off the nitrogen vapor from beneath its collecting dome in the separating baffle which forms the top of the lower region. This cold nitrogen vapor tends to collect at the top of the upper region of the column, from which it may be withdrawn for further usage in the system.

The column should be further provided with a reflux line to pass the liquid air - from which some of its nitrogen has been removed - from the bottom of the column to the

upper region, through an oxygen expansion valve, to reduce the pressure and the temperature of the mixture to that of this region. This combined drop in pressure and temperature effectively separates the nitrogen vapor from the liquid oxygen, the amount of which may be indicated by a liquid level gauge.

A similar level gauge should be provided to indicate the level of the liquid air in the bottom of the column.

The complete column assembly should be completely insulated and should further be enclosed in a well insulated case or "cold box"; this box should also be large enough to contain all other contingent equipment such as the Liquid Oxygen Pump, if such equipment should be used.

10. A LIQUID OXYGEN PUMP may be used to pump the cold low-pressure liquid oxygen out of the Fractionating Column to its final disposition. This cold liquid oxygen, now compressed, is usually pumped through the Heat Exchanger in which it picks up heat from the warm compressed air - as the latter is on its way through the Exchanger to the Air Expansion Valve.

As the result of this heat exchange, the oxygen leaves the Heat Exchanger as warm compressed gas which may be fed directly to the Cylinder Charging Manifold or to oxygen storage from which it may be later withdrawn.

11. The OXYGEN CHARGING MANIFOLD comprises a system of piping, consisting of a horizontal length of 2" pipe fitted with flexible "pigtails" of copper tubing and valves. The manifold may be constructed to charge twenty cylinders simultaneously arranged as shown in Figure 4.

Each of the two sections of the manifold must be fitted with special valves, capable of withstanding a pressure of 5,000 lbs. per sq. in. (350 kg. per sq. cm.).

For continuous operation a ten cylinder manifold would be required. For a charging period limited to eight hours per day, a twenty station manifold would be necessary to load the full complement of 150 cylinders per day. Should the latter schedule be selected, additional facilities would be required to store the oxygen during the periods between loadings.

Such storage facilities would consist of a steel pressure sphere or cylinders together with means for reducing the high pressure and also measuring the flow of the gaseous oxygen for shipment. It will be noted that besides the oxygen feed line, the manifold is equipped for evacuation by a vacuum line for the purpose of evacuating air, etc., from the cylinders as a preliminary to charging with oxygen.

12. INSTRUMENTATION necessary for proper operation include as a minimum, indicating pressure gauges to indicate pressure at each of the following points:

    a) High pressure air immediately ahead of the Air Expansion Valve.

    b) Pressure within the lower region of the Air Fractionating or Rectifying Column.

    c) Pressure within the upper region of the Rectifying Column.

    d) Pressure of the finished oxygen.

A thermocouple type of temperature indicator should be provided for the measurement of important temperatures, such as those at the various stages of the process and within the Rectifying Column.

13. The COLD NITROGEN VAPOR from the Column should be used in the Heat Exchanger to assist the cold compressed liquid oxygen in the absorption of heat from the high pressure air as the latter passes through the exchanger on its way to the Column. The heat so obtained, together with that from the Electric Heater, would warm the nitrogen to such a temperature as would make it useful in drying the desiccant in the Drying Towers, should this be desired, after which the nitrogen could be wasted to the atmosphere.

If it is determined that a market could be developed for the sale of this nitrogen, a compressor could be added to the equipment to compress the nitrogen prior to storage in suitable containers.

Availability of Equipment

Complete plants for the production of dry gaseous oxygen of purity of 99.5% and higher are available as "packaged units" or assemblies, together with all pipe and fittings necessary for interconnection of the various components of the plant. These plants are manufactured and sold by the following firms:

Air Products, Incorporated
Box 538
Allentown, Pennsylvania

American Messer Corporation
405 Lexington Avenue
New York 17, New York

American Oxygen Service Corporation
609 Essex
Harrison, New Jersey

Blaw-Knox Company
Chemical Plants Division
936 Duquesne Way
Pittsburgh, Pennsylvania

Gas Equipment Engineering Corporation
Mount Vernon, New York

Koppers Company, Inc.
Engineering and Construction Division
Koppers Building, Department TR
Pittsburgh, Pennsylvania

Standard Air Company, Inc.
78 Gardner Avenue
Brooklyn 37, New York

Superior Air Products Company
134 Malvern Street
Newark 5, New Jersey.

These "packaged" plants may be obtained in several different sizes and capacities with or without an Air Refrigerator, the use of which is usually limited to the starting and/or "pulldown" period.

The capacities of plants built by Superior Air Products Company range from 250 cu. ft. (7.0 cubic meters) per hour to 600 cu. ft. (16.8 cubic meters) per hour with single rectification and from 750 cu. ft. (21 cubic meters) per hour up with double rectification, at an output pressure of 2,500 psig (175 kg per sq. cm) or 169 atmospheres. Those built by American Messer range from 30 cubic meters (1,070 cubic feet) upward with output pressures up to 3,000 psig (210 kg. per sq. cm or 204 atmospheres).

Practically all operating capacities are based upon datum ambient conditions of 20°C (68°F), a barometer of 760 mm Hg. and 50% relative humidity.

An average cost for a "packaged" plant within the required capacity brackets would be about $60,000 to which must be added shipping and installation costs.

For the specified capacity of 150 cylinders [illegible], such a plant would be fairly small in output - 1,520 cubic feet (42.56 cu. meters) of oxygen per hour. However, when considered from many operating standpoints, such a plant should be considerably larger in capacity. It would weigh about 35,000 lbs. (15,900 kg.) when crated for export; it would have a shipping volume of about 1,600 cubic feet (44.8 cubic meters).

When installed it could produce oxygen of 99.5% purity; it would require a floor area of about 520 square feet (48.3 sq. meters), to which must be added sufficient floor space to accommodate the storage of both empty and full oxygen cylinders and operating supplies, receiving and shipping docks, weigh scales and office.

Shipping and Shipping Containers

The shipping of compressed gases presents a unique problem, particularly in the matter of the acquisition and handling of the containers or cylinders.

These cylinders may be purchased and owned by the oxygen producer who charges a deposit and nominal rental for the time these are in the custody of the customer, who is held fully responsible for their condition and replacement if lost.

An alternative is the rental of such cylinders by the oxygen producer, who in turn charges the customer this rental fee plus a reasonable charge for handling and bookkeeping.

The cost of these cylinders varies with the size and range from $9.00 for the 12 cu. ft. to $50.00 for the standard 244 cu. ft. cylinder. These costs include the protective cap and valve, but not the pressure regulator.

It may be realized that the investment in cylinders by the oxygen producer is so indeterminate as to invalidate any estimate of its magnitude in the cost of plant equipment, particularly when such cost is considered to be affected by many operating factors, all of which are presently unknown; these may only be determined by market, transit and usage conditions, particularly the latter, since these affect the turnover or number of usages which may be realized per cylinder per given period of time.

Therefore, for these reasons, the cost of cylinders has purposely been omitted in the estimate.

While it is quite possible for the prospective producer of oxygen to build his own plant, the fact that so many companies fabricate and sell "packaged" plants serves to indicate the greater economies to be realized by purchasing these small capacity plants, rather than in attempting to build his own.

However, even if such a plant be purchased, it is recommended that the purchaser secure the services of a competent professional engineer to assure the proper installation and start of operations; most of the sellers of these plants have such engineers available on their staff if the purchaser wishes to secure their services.

These plants are best illustrated by flow diagrams to describe the process only. Pictures would not convey any impression of the plant since these would merely illustrate commercial air compressors, various vessels and piping, even if these were exposed. However, most of this equipment is always completely enclosed in the "cold box," and nothing of interest may be seen. Accordingly, pictures as such, have purposely been omitted.

PLANT OPERATION

Because of the fact that most manufacturers of "packaged" plants usually furnish the purchaser with complete operating instructions, only the highlights of operating procedures will be outlined here.

Power Requirements

The power required for operating the plant will depend upon -

a) The type of process, i.e., whether this would be Linde or Claude.

b) The scale of operation.

c) Continuous or intermittent operation.

Each of these factors materially affect the power demand.

a) For instance, the Linde demand will average about 1.1 horse power hour per pound of oxygen produced; it will vary from 0.6 H.P. hr., for large outputs and careful

operation, to 1.6 H.P. hr. for small plants and indifferent operation. Therefore, for a daily production of 150 cylinders (at 244 cu. ft. per cylinder), representing 1,525 cubic feet, or 131.15 lbs. per hour, an average power requirement of about 144.25 H.P. would be expected; however, this could increase to 210 H.P.

For the same production, the Claude system would require an average of 0.77 H.P. hr. per lb. of oxygen. This would amount to 100 H.P. hr. for the same output and is partly because of the use of the air expansion engine's contribution to the total power requirement.

b) These requirements may be modified by the scale of operation of the plant. Obviously, the higher the rate of production, the lower the cost per pound of oxygen.

c) The third factor - that of continuity of operation - affects costs because the actual horse power demand when the plant is on stream during normal operation is considerably less than the total connected horse power.

The starting load is always higher than the running load; the starting air pressure may approximate 2,000 lbs. per square inch gauge. When the plant is first started up, it may require six to eight hours

to pull the temperature of the process air down to that of condensation, depending upon ambient conditions, during which time the total connected load will be fully used.

At the end of this starting period, the compressor load falls to a lower demand; the air expansion engine driven motor ceases to function as such and begins to serve as an electric generator which contributes to this reduction in load as the plant settles down in normal operation.

If the plant is shut down again, for two or three days, these starting conditions will be repeated and over the same period. If the plant is shut down for one eight hour shift, from one to four hours may be required to pull the temperature down to the normal operating level.

It must be noted that the motor used to drive the caustic circulating pump for the Air Purifier is in constant use while the plant is in operation, as is also the motor driving the Air Dryer Blower. The heating element of the Air Dryer, which normally demands about four times the energy of the Blower Motor, is only used intermittently. These power requirements and their costs must be taken into consideration when working out an operating schedule.

To take care of possible future increase in oxygen demand which might require plant expansion, it might prove economically feasible to install a plant of fifty to one hundred per cent greater capacity and only run it for the time required to fulfill the immediate demand.

The estimated costs of such a plant and its operation have been calculated to demonstrate the feasibility of this type of operation; specifically, to operate a plant of 2,500 cubic feet (71 cubic meters) per hour continuously for a period of six days per week, then shutting down for the remainder of the week.

Such an operating schedule would also allow time for maintenance.

With a plant of this capacity, the following loads may be anticipated:

	Horse Power	KVA
Air Compressor	125	93.250
Caustic Solution Circulating Pump (Air Purifier System)	1	0.746
Air Dryer Heater, if electric	4	2.984
Air Dryer Blower	1	0.746
Liquid Oxygen Pump Motor	3	2.238
Air Refrigerator Motor	4	2.984
Total Connected Power	138	102.948

Cooling Water

The plant will require a continuous flow of cooling water at the rate of 30 gallons (113.55 liters) per minute, and at a temperature of 68°F (20°C) entering the plant's cooling equipment which will be necessary if the temperature rise of the water is to be limited to 20°F (11°C) during the cooling of the aftercooler while under full load.

Where well water of reasonable softness is available, no trouble should arise from scale deposition in the aftercooler or the compressor if the latter is water cooled; if the water is hard, it must be treated to assure maximum efficiency of the plant.

Where an ample supply of good water is not available, recourse to the installation and operation of a cooling tower might be necessary; such might also be indicated in the interest of economy.

If a separate pumping system is available, the full rate of flow of cooling water should be circulating before starting up the compressor to make sure that all water passages are free and clear.

If a Cooling Tower is employed, screens should be kept clean and algae growth prevented by chemical treatment of the water.

Air Filter

The Air Filter should be inspected and cleaned; if of the oiled type, the cells should be completely cleaned by rinsing in petroleum solvent, after which they should be immersed in SAE #40 or #50 lubricating oil and allowed to drain before being reassembled in the filter cell rack.

Where continuous operation of the plant is required, it might prove advantageous to have a dual rack, so that one battery of filter cells can be cleaned while the other is in service. In the interest of preservation of the Air Compressor, the proper functioning of the Air Filter is of the utmost importance.

Air Compressor

The quantity and condition of the lubricant should be determined by inspection, prior to starting up this unit after every shutdown. The type and quantity of lubricant supplied to this machine should be as specified by the manufacturer. Because of the high operating pressures, too much emphasis cannot be placed on the importance of the proper supply of lubricants to this unit.

If the intercooler is water cooled, all water passages should always be kept clear and clean; this also would apply to the compressor if such should be water cooled.

Air Purifier

A saturated caustic solution should be prepared in the tank of the Air Purifier and circulation of this solution should be started, before starting up the compressor.

The reaction of the carbon dioxide with the caustic solution will precipitate carbonate which must be removed and the caustic either revivified or replaced by fresh solution.

The amount of caustic used will vary with the carbon dioxide content of the air. This may vary from 100 parts per million parts of air, to as high as 600 p.p.m., depending upon the environment of the plant and its operating capacity in this environment.

The caustic must be handled with the utmost care by the operator who should wear rubber gloves and goggles, because this chemical can inflict serious burns; this is true whether the sodium or potassium hydrates are used.

This hazard does not exist in plants which employ carbon dioxide filters, as diagrammed in Figure 3A, which are designed to filter out the carbon dioxide after it has been frozen into "dry ice."

In this type of filter, two filters are usually provided; one of these is being cleared while its twin is in service, each alternating with the other. It may be cleared of the solid carbon dioxide by any one of several ways, as may be specified by the plant designer.

Aftercooler

This component should cause no trouble if a source of good water is available. If not, a periodic inspection should be made while the plant is shut down, and any accumulation of scale promptly removed by chemical means.

Air Dryer System

Operation of this system is usually automatic after it has been filled with its initial charge of desiccant which may be either Activated Alumina or Silica Gel.

If the system is provided with a moisture separator or trap, this should be blown down or drained as often as may be indicated by inspection, to minimize the amount of moisture and oil carried over into the Dryer Towers.

During start-up operations, electricity is usually relied upon to heat the air supplied to the Air Dryer to drive off the moisture adsorbed by the desiccant; after the plant settles down, this

function may be taken over by the passing of warm gaseous nitrogen from the Heat Exchanger, which may or may not be adequate in performance. Other designs depend entirely upon electrical heat to heat the drying gases, before admittance to the Drying Tower throughout the operating period of the plant.

If the air drying system is manually operated, the operator must be certain that air valves are properly set to permit passage of air through the active tower and also, at the same time, to completely cut off the tower being reactivated.

Periodic tests should be made to ascertain the condition of the desiccator to determine when it should be cut off stream and opened to the reactivating gas flow. When the desiccator is thoroughly dry, particular care should be taken to make sure that the flow of reactivating gas is completely shut off before opening the reactivated tower to the air stream.

Heat Exchanger

There are no operating problems in connection with this particular element except to make sure that each of the various regions do not leak.

Air Expansion Engine

This unit requires no particular attention other than to make sure that it is always properly lubricated and in accordance with the manufacturer's recommendations, and that packings are always tight.

Air Fractionating Column

There are no particularly outstanding operating features to be pointed up in this part of the plant.

Liquid Oxygen Pump

This equipment may or may not be used intermittently, depending upon the type of operation selected. Usually this pump is employed to circulate the compressed liquid oxygen through the Heat Exchanger to chill the latter; during this process, the liquid is converted into gaseous oxygen. Lubrication of this pump is only to be accomplished in strict compliance with the specifications of the manufacturer.

Oxygen Manifold and Vacuum Pump

When charging oxygen cylinders, each cylinder must be tightly connected to the manifold after which the Vacuum Pump should be started, but only after making sure that the Main Oxygen Valves which supply the Manifold are tightly closed.

Each cylinder should then be opened to the Oxygen Manifold and the valve to the Vacuum Pump opened and this Pump operated until the cylinders are completely evacuated. The Vacuum valve should then be closed after which the Manifold's Main Oxygen Valve may be opened, then the valves to each cylinder.

This procedure must be repeated every time a cylinder or any group of cylinders is to be charged.

Number of Operators Required

Under normal circumstances, a minimum of three operators would be required while the plant is in continuous operation, one operator for each shift.

Instrument Observation and Performance Records

The operator on watch should, at regular intervals, observe pressures and temperatures and record these in the Performance Log. These intervals should be shorter during the startup period than when the plant has settled down in steady operation. Any unusual conditions should be recorded in detail in this log.

Operating Hazards

While oxygen is not combustible, it supports combustion so well that the presence of the usual lubricants, finely divided combustibles such as some dusts and even metallic chips, present hazards which must be guarded against in plant operation.

PRODUCTION OF ACETYLENE

General Principles

The production of acetylene gas ($C_2 H_2$) results from the combination of calcium carbide and water. The method by which this is accomplished has a marked bearing on the production capacity of the plant; i.e., by adding the calcium carbide to the water, its production rating may be doubled because of the reduction in the amount of heat of reaction in this operation as compared with that of the method of adding water to the calcium carbide.

Calcium carbide is shipped by the manufacturer in tight steel drums of 100 pounds (45.5 Kg), 250 pounds (113.5 Kg) and 350 pounds (158.9 Kg) net weight. The drums are returnable to the vendor. It is made from carbon, which may be in the form of low-ash coke, low-ash anthracite coal, charcoal or petroleum coke. This carbon is combined with lime in the electric furnace.

The commercial product is dark colored and crystalline, while the pure material is colorless and transparent.

One pound of carbide will generate 4.5 cubic feet (0.126 cubic meter) of acetylene gas; the reaction of this process terminates in the precipitation of a sludge, the composition of which will vary with the amount of the water.

Without excess water, the sludge would be lime in accordance with the reaction -

$$Ca\,C_2 + H_2O = C_2\,H_2 + CaCO$$

Calcium Carbide + Water = Acetylene + Lime

With excess water this reaction would continue to calcium hydrate -

$$Ca\,CO + H_2O = Ca\,(HO_2)$$

Lime + Water= Calcium Hydrate

The crude gas so generated may contain impurities such as hydrogen sulphide, ammonia and phosphine which give it a very strong and penetrating odor. These should be removed before the acetylene is used. The purified gas has an ethereal odor.

The gas is very active and is quite hazardous. It forms explosive acetylides, particularly with copper, and when mixed with air, has wide explosive limits.

Under atmospheric pressure acetylene may be decomposed by heat without too much hazard; however, if it is compressed to more than 30 pounds per square inch (2.1 Kg per square cm.), such decomposition is so rapid as to amount to an explosion. Because of this, its use as a liquid is usually strictly prohibited and it is ordinarily stored by dissolving in acetone under pressure.

As previously mentioned, considerable heat is evolved when the carbide is acted upon by the water. However, since the temperature developed is a function of the time needed to complete the action, the degree of heat attained will vary with the form of the generator, so that while with one form the water may never reach the boiling point, in another type the carbide may become very hot. Not only is this a source of danger, it also will lessen the yield of gas and impair its quality as well. Hence, the great advantage of having a generator which will assure the following operational characteristics:

1. Low generating temperature
2. Low pressure
3. Maximum evolution of gas
4. Complete decomposition of the calcium carbide
5. Ease in charging and removal of sludge
6. Completely automatic feed of carbide
7. Removal of all air from the system before commencement of generation.

The disposal of sludge sometimes presents a major problem which might be overcome in most instances by the demand for its use in agriculture, sewage treatment, water softening and acid neutralizing.

Other industries which make use of this lime include -

Building	Ferrous Metals	Petroleum
Canning	Glass	Plastics
Chemical	Meat	Soap
Coal and Coke	Non-Ferrous Metals	Sugar
Dairy	Paint	Tanning
Distilling	Paper	Textile

In some instances sufficient revenue may be realized by the sale of the lime to reduce the cost of acetylene production by a considerable amount.

The storing of acetylene in cylinders is made practicable by dissolving the compressed gas in acetone which is capable of absorbing twenty-five times its own volume at 15°C under atmospheric pressure. The liquid acetone will continue to absorb the gas at the same rate for each atmosphere of pressure to which the acetylene may be subjected.

DESCRIPTION OF PLANT

Gas Generators

The type of plant to produce 150 cylinders of acetylene per day, or 29, 100 cubic feet (814.8 cubic meters) per day, assuming the standard 194 cubic feet (5.43 cubic meters) cylinder would primarily

consist of two generators, each of which is capable of working alternately, to produce 1,000 cubic feet (28.0 cubic meters) per hour for a period not exceeding 2.25 hours from a charge of 500 pounds (227 Kgm) of calcium carbide. In this particular instance where both generators will be called upon to work simultaneously, this would be best accomplished through a Generator Control System to assure the equalization of the delivery rates from each Generator.

They must be housed in a single story building which must meet certain minimum requirements which will be detailed hereinafter.

Each of these generators would require 500 gallons (1,892.5 liters) of water (one gallon for each pound of carbide charged), and would be fully automatic in operation.

The types of automatic feed vary from the simplest form, which depends upon the internal pressure of the generator to cut off the carbide feed when this pressure rises to a certain predetermined value - say 15 pounds per square inch (1.05 Kg. per square cm.) to the screw-conveyor feed type usually employed in connection with compressors used in packing the acetylene in cylinders.

The generator comprises an airtight assembly of water tank and carbide feed chamber. The latter is mounted upon the top of the tank to receive a portable charging hopper, which in some designs is used for charging the generator.

In the simplest type of gravity feed, the carbide drops out of the bottom of the hopper through a valve or gate into the water tank. This valve is operated by the pressure generated by the evolution of acetylene gas; as the gas accumulates, the pressure rises to a pre-set value at which it closes the valve and prevents further dropping of carbide into the water. As the gas is drawn off, the pressure within the generator falls to the point where the valve is permitted to reopen, completing the cycle.

Figure 6 illustrates Linde's "OXWELD" MP-11 (Series 3) Stationary Medium-Pressure Acetylene Generator; this conveys an excellent idea of the complete assembly.

If the gas is to be compressed, the generator should be of the "4 speed" type, a type capable of feeding the compression system at four different rates to assure smooth feeding to the compressor intake and proper disposition of the gas in conformance with compressor operation.

Vacuum System

In "batch" type of generator, a vacuum system should be provided of such capacity as to completely evacuate the air from each generator prior to starting the generation of acetylene. In the "continuous" type, this system is not required.

Filter Box or Purifier

If a high degree of purity is desired, the acetylene must be processed to remove ammonia and phosphuretted hydrogen.

In this process, the ammonia must be removed first. This may be accomplished by passing the gas through a scrubbing chamber in which it is washed with a solution of calcium chloride, after which it may be passed through a solution of common bleaching powder or other oxidizing medium to remove the phosphuretted hydrogen. Unless this is done, there would be the risk of the ammonia in the acetylene forming traces of chloride of nitrogen, a compound which detonates with considerable force and could cause explosions in the purifying system.

These processes may be combined in a Filter Box or Purifier.

Gas Dryer

Whether the gas is purified or not, it must be dried before entering the compressor. This is accomplished by the Dryer, a pair of chambers each of which is filled with Silica Gel; all water entrained in the gas is removed by passing the latter through the Silica Gel. When necessary the saturated chamber is by-passed and the gas is diverted to the chamber containing the dried or reactivated gel, while its twin is being reactivated.

Acetylene Compressor

Because of the hazard involved in compressing this gas, the compressing equipment differs in design from the usual air or gas compressor, inasmuch as the crankcase, as such, is omitted. It is replaced by an open frame which carries the guides for the crosshead, similar to that used in the conventional steam engine; there should be no pockets in which acetylene could collect.

Packing must be of the vented metallic type, readily accessible.

A typical compressor, which would be particularly adapted to this service, is the Horizontal, Two-Stage water cooled #ESH-2 unit built by Ingersoll-Rand; this has a 5" (12.70 cm) stroke and Low Pressure Cylinder bore of 7" (17.78 cm) and High Pressure bore of 3" (7.62 cm).

This compressor is capable of compressing the gas to a pressure of 250 pounds per square inch gauge (17 Kg per square cm.) and may be belt-driven by a 15 H.P. motor.

Sludge Disposal

The two generators in alternate operation will make approximately 26.8 long tons (27.2 metric tons) of sludge per day of 24 hours. The sludge as it comes from the Generators is actually a slurry, of which approximately 10% is solids; this would amount to about 700 cubic feet per day of 24 hours.

This may be pumped by centrifugal pumps directly into tank trucks, drums or other suitable containers for transport; if this disposal procedure is not immediately practicable, the sludge may be pumped into settling basins in which the solids can settle, leaving the clear water to drain off or evaporate.

Two sludge settling basins should be provided, one for each generator. Each basin should be shallow enough to permit emptying by hand shovel, without demanding too high a shovel lift for the laborer; this would indicate a maximum depth of 30 inches (73.35 cm), and would demand an area of 180 square feet (16.72 square meters) each. Each basin may be formed by excavating the earth to the required dimensions.

No lining is necessary inasmuch as this is provided by a layer of lime on the walls and floor which will reduce, if not prevent, water seepage.

These settling basins have a great advantage because they permit concentration of the thin slurry to the point where it can readily be handled.

It must always be recognized that areas adjacent to these settling basins are potentially hazardous, and that sparks or flame cannot be allowed in such areas, inasmuch as the sludge may contain some acetylene dissolved in it which can be gradually liberated.

Building

The generators should be installed in a fireproof building, set completely apart from any other structure so that they are in no danger of ignition from any source.

The building should be divided into two distinctly separate areas, one to house the generators and the other for storage of carbide. The building floor should be at two levels, the generator room should be at least three to four feet lower than the carbide storage room to facilitate the charging of carbide.

The floor of the Generator Room should be of reinforced concrete construction with non-sparking finish; it should have a minimum thickness of 6" and should be sloped to drain into a trench, the latter should be sufficiently wide and deep to accommodate the water supply and generator drain piping. This trench should slope toward and terminate in the sludge basin.

Ventilation of this room is of primary importance; windows and roof ventilators without dampers should be used for this purpose.

All windows and doors should be equipped with explosion-release hardware and arranged to open outward.

Electrical

Lighting must be by electric incandescent lamps in vaportight fixtures with metal guards; all wiring and switches must be enclosed in rigid conduit and vaporproof condulets.

Carbide Storage

This section of the building should provide well-ventilated dry space for storing carbide, together with all facilities required for handling carbide drums. As previously mentioned, the floor of this room should be elevated above that of the adjoining generator room, to facilitate receiving the drums on a shipping dock of the same

elevation, as well as charging the generators. This operation requires the installation of a monorail with a 1/2 ton trolley and hand hoist with non-sparking chain to pick up and transport the carbide drums and load them into the generators. If power equipment is desired, this should be limited to compressed air hoists.

The floor should be covered with a non-sparking surface, similar to that of the Generator Room.

The total area of this portion of the plant would be about 514 square feet (47.75 square meters).

Cylinder Charging Equipment

Acetylene may be delivered into the system for use by piping directly from the generators under generator pressure, or it may be shipped in cylinders into which it would be compressed under a pressure of 250 psig (17 Kg per square cm.).

Each of these cylinders will contain 194 cubic feet (5.43 cubic meters) of gas which is dissolved in a charge of acetone. Other sizes of commercial cylinders include those of 295 and 325 cubic feet (8.26 and 9.1 cubic meters) respectively, all under the same pressure of 250 psig.

Acetylene Charging Manifold

The design of the Charging Manifold is practically the same as that of the Oxygen Manifold. It is equipped with a pressure regulator, Control Block and Relief Valves and, for a handling capacity of four cylinders simultaneously, would cost about $500.00 complete.

A manifold for filling ten cylinders simultaneously would cost about $2,200.00 complete, but not installed. The selection of the most appropriate manifold would depend upon the operating schedule which might be favored.

Cylinder Charging and Shipping

A separate building should be provided to house the Acetyline Compressor, the Cylinder Charging Manifold, Weigh Scales and Cylinder Storage.

This building should also have a receiving and shipping dock and be immediately adjacent to an all-weather access road. Where climatic conditions permit, this building could be merely a fireproof shed, without walls, to house the Compressor Equipment, the Cylinder Charging Manifold and Weigh Scales.

Cylinder Storage needs no roof or walls, but should have a hard non-spark surfaced floor. The area for this portion of the plant would average about 2,400 square feet (223.0 square meters).

Heating

Temperatures within the Generator Building must be kept sufficiently high to prevent freezing. If heating is required, it should be by steam or hot water. The boiler for this system must be located at a sufficiently great distance as to eliminate all hazard from flame or sparks.

For a more economical system, an electric heater mounted outside and away from the generator building may be used to heat air for distribution into the building through suitable ductwork.

Plant Area

The total area of the Acetylene Plant could be as detailed below:

	Square Feet	Square Meters
Acetylene Generators	240	22.3
Carbide Storage	264	24.5
Sludge Storage	360	33.5
Compressor Plant	80	7.5
Acetylene Charging Manifold	60	5.56
Cylinder Storage and Dock	2,400	223.0
	3,404	316.36

Availability of Equipment

With the exception of building structures, all of the generating equipment, as well as the Acetylene Compressor and Charging Manifold described herein, may be purchased from any of the following manufacturers:

Air Reduction Sales Company, a Division of
Air Reduction Company, Inc.
60 East 42nd Street
New York, New York

American Messer Corporation
405 Lexington Avenue
New York, New York

Ingersoll-Rand
11 Broadway
New York 4, New York

Linde Company
Division of Union Carbide Corporation
30 East 42nd Street
New York 17, New York

Sight Feed Generator Company
53 East 3rd Street
West Alexandria, Ohio

Standard Air Company, Inc.
78 Gardner Avenue
Brooklyn 37, New York

Superior Air Products Company
134 Malvern Street
Newark 5, New Jersey

Union Carbide International
270 Park Avenue
New York, New York

PLANT OPERATION

Water Supply

Water for the generation of acetylene must be supplied to the generators at a minimum pressure of 30 psig (2.1 Kg per square cm.) at which rate the flow must be not less than 35 gallons per minute (132.47 liters). The recommended pressure is 60 psig (4.2 Kg per square cm.) with a corresponding flow rate of 65 gallons per minute (246.0 liters).

It should be noted that the net pressure available to the generator is that equal to the supply pressure minus the gas pressure within the generator; for this reason, it is suggested that the recommended pressure be made available to assure rapid filling of the generator.

The water should be supplied at temperatures not higher than 80°F. (26.6°C) and should be clean, free from oil and chemical contamination. Oil would result in foaming and the formation of carbide "islands" on the surface of the water, while chemical impurities could result in the formation of insoluble calcium salts; these might accumulate in the generator and cause some trouble. Water containing excessive amounts of hydrogen sulphide could cause trouble in that this compound must be removed from the gas or it could affect torch equipment.

Charging the Generators

In charging all generators of high capacity, it must always be remembered to fill the generator tank with water in accordance with the operating instructions for that particular make or type of generator before loading with carbide.

When charging carbide, it is good practice to employ a Charging Hopper, if such is available, to load the carbide into the generator hopper without spilling and to do so without raising and scattering carbide dust; remember that water spilled on such dust will create a real hazard, inasmuch as it will immediately start the generation of flammable gas.

Storage and Usage of Carbide

When storing carbide, the arrangement of drums should be such as to permit continuous turnover of the carbide, by using the carbide in the order in which it is received to minimize the length of time any drum is in storage.

Warning Signs and Fire Extinguishers

Caution signs should be posted in conspicuous places on all outside and inside walls of both the generator and carbide storage rooms.

The latter signs should state that the room contains calcium carbide and warn against the use of water in the event of fire.

The generator room should be provided with several dry chemical or carbon dioxide type of fire extinguishers.

Soda-Acid or other types which employ water or any solution that would react with carbide SHOULD NOT BE USED.

Pails of dry sand should be provided for the carbide storage room.

"No Smoking" signs and others warning against open lights or fires should be placed in and around buildings and the sludge pits.

DIRECT MATERIALS

Item	Unit	No. of Units	Unit Cost	Total Cost Estimated	Total Cost Actual
Calcium Carbide	c/wt	19,398	$9.15/c	$177,500	_____
Acetone	pound	146,000	.12	17,500	_____
Total				$195,000	_____

SUPPLIES

Item	Unit	No. of Units	Unit Cost	Total Cost Estimated	Total Cost Actual
Activated Alumina	pound	2,000	$ .35	$ 700	_____
Lubricants	gallon	50	2.00	100	_____
Caustic soda	pound	14,400	.09	1,300	_____
Total				$2,100	_____

PLANT LAYOUT

Plant layouts showing the location of machines and equipment are shown on pages 76 and 78.

PLANT SITE

A plant site of approximately 20,000 square feet will be required. The site should be located advantageously with respect to transportation, power, water, fuel and markets. Location with regard to labor markets is not important, since the labor requirement is small. The plant should be well separated from other plants and buildings due to the possible fire hazard.

The estimated cost of property is $1600.

BUILDINGS

Two one story buildings each fifty feet by fifty feet with attached loading docks will be required. Total area including loading facilities is 6,000 square feet.

The total cost of buildings including plumbing, wiring and heating is $24,000. Any local building materials may be used.

POWER

The total connected load is 150 horsepower. Based on an eighty per cent load factor, the annual cost of power is estimated to be $15,000.

WATER

The annual water requirement for all purposes is estimated at 1,940,000 gallons.

The annual cost of water is estimated at $500.

FUEL

It is estimated that the annual cost of fuel for heating purposes only will be $175 per year.

PRODUCTION EQUIPMENT

Description	Number Needed	Unit Cost	Cost Estimated	Actual
Oxygen equipment	1	$60,000	$60,000	_____
Acetylene generator	2	5,000	10,000	_____
Acetylene compressor	1	3,450	3,450	_____
Vacuum pump	2	275	550	_____
Manifolds	2	1,500	3,000	_____
Wiring	1	500	500	_____
Piping	1	500	500	_____
Sludge pits	2	575	1,150	_____
Total			$79,150	_____

FURNITURE AND FIXTURES

Description	Number Required	Unit Cost	Estimated Cost	Actual Cost
Desks and chairs	2	$125	$250	_____
File cabinet	1	75	75	_____
Typewriter	1	150	150	_____
Adding machine	1	150	150	_____
Total			$625	_____

DIRECT LABOR

Job Classification	Number Required	Hourly Rate	Annual Cost Estimated	Annual Cost Actual
Oxygen Plant				
Operator	3	$3.00	$21,600	_____
Maintenance man	3	2.00	14,400	_____
Acetylene Plant				
Operator	3	3.00	21,600	_____
Laborer	6	2.00	28,800	_____
Total	15		$86,400	_____

INDIRECT LABOR

Job Classification	Number Required	Annual Cost Estimated	Annual Cost Actual
Manager	1	$10,000	_____
Bookkeeper	1	5,000	_____
Total		$15,000	

DEPRECIATION

Description	Estimated Cost	Years Life	Per Year Estimated	Per Year Actual
Buildings	$24,000	10	$ 2,400	_____
Machinery and equipment	79,150	10	7,915	_____
Furniture and fixtures	625	10	63	_____
Total			$10,378	_____

MANUFACTURING OVERHEAD

Item	Cost Estimated	Cost Actual
Depreciation	$10,378	_____
Indirect labor	15,000	_____
Power	15,000	_____
Water	500	_____
Fuel	175	_____
Supplies	2,100	_____
Total	$43,153	_____

MANUFACTURING COST

Item	Cost Estimated	Cost Actual
Direct Materials - Oxygen	$ -0-	_____
Direct Labor - Oxygen	36,000	_____
Direct Materials - Acetylene	195,000	_____
Direct Labor - Acetylene	50,400	_____
Manufacturing Overhead	43,153	_____
Total	$324,553	_____

FIXED ASSETS

Item	Cost Estimated	Actual
Land	$ 1,600	_____
Buildings	24,000	_____
Production equipment	79,150	_____
Furniture and fixtures	625	_____
Total	$105,375	_____

WORKING CAPITAL

Item		Cost Estimated	Actual
Direct material	30 days	$16,250	_____
Direct labor	30 days	7,200	_____
Manufacturing overhead	30 days	3,600	_____
Reserve for sales collections	30 days	65,000	_____
Total		$92,050	_____

CAPITAL REQUIREMENTS

Item	Cost Estimated	Cost Actual
Fixed assets	$105,375	_____
Working capital	92,050	_____
Total	$197,425	_____

SALES REVENUE

	Cost Estimated	Cost Actual
Sales of oxygen	$299,000	_____
Sales of acetylene	480,000	_____
Total	$779,000	_____

Sales revenue is based on sales prices of $2.73 per hundred cubic feet for oxygen and $5.49 per hundred cubic feet for acetylene. The volume of gas per cylinder of oxygen is 244 cubic feet, of acetylene is 194 cubic feet.

RECAPITULATION OF COSTS, SALES AND PROFITS

Item	Cost Estimated	Cost	Actual
Direct materials	$195,000		_____
Direct labor	86,400		_____
Manufacturing overhead	43,153		_____
Total manufacturing cost		$324,553	_____
Interest on loans	$ 6,000		_____
Insurance	1,020		_____
Legal	600		_____
Auditing	1,200		_____
Unforeseen expense	10,000		_____
Total administrative cost		18,820	_____
Sales expense		12,000	_____
Freight-out, travel, bad debts, discounts and allowances		20,000	_____
Profit before taxes		403,627	_____
ANNUAL SALES REVENUE		$779,000	_____

BUDGET CONTROL:

A requisition form designed to provide accurate records of procurement and indicate the purpose of procurement with the least amount of time and effort is shown on the following page.

This form has an account number for each type of the various expenditures which the manager will review in detail, monthly or oftener, in order to control his expenses. Some items, such as power and water, are usually under contract and are easily checked by reference to monthly bills. For simplification, items (marked with an asterisk below) are omitted from the purchase requisition. Variations in the labor costs are easily reviewed by examination of the payroll vouchers. The simplified type of control thus provided makes certain that the manager can control expenditures promptly.

Following the requisition form, a sample voucher check is shown. Voucher checks should be used for the payment of all expenditures and the appropriate book account number placed on each voucher.

At the end of each month the manager will receive a statement of all expenditures broken down by budget accounts. If the expenditures exceed the budgeted monthly allowances of any of the accounts, the bookkeeper will furnish the manager with a breakdown of all expenditures relative to the budgeted accounts exceeded. All these supporting data can be secured by reference to the purchase requisitions and the check vouchers. This reference will enable the manager to determine what caused the over-expenditure and take corrective action.

If at any time during each month it becomes apparent that expenditures will exceed any of the budget accounts, the bookkeeper will bring this to the attention of the manager for his information and action.

BUDGET CONTROL ACCOUNTS:

Account Number		Monthly Expense	Monthly Budget	Annual Budget	Actual
10	Administrative	$_____	$ 765	$ 8,820	$_____
20	Sales	_____	65,000	779,000	_____
30	Direct Materials	_____	16,250	195,000	_____
40	Supplies	_____	70	800	_____
51	Power*	_____	1,250	15,000	_____
52	Water*	_____	40	500	_____
53	Fuel	_____	15	175	_____
60	Unforeseen Expense (Reserve Account)	_____	830	10,000	_____
71	Direct Labor*	_____	7,200	86,400	_____
72	Indirect Labor*	_____	1,250	15,000	_____
80	Depreciation (Reserve Account)	_____	865	10,378	_____

Note: Administrative includes interest on loans, insurance, legal and auditing.

PURCHASE REQUISITION	COMPANY NAME	DATE

- ☐ 10 ADMINISTRATION
- ☐ 20 SALES
- ☐ 30 MATERIALS
- ☐ 40 SUPPLIES
- ☐ 50 UTILITIES
- ☐ 60 UNFORESEEN EXPENSE

INDICATE BELOW THE USE OF MATERIALS

- ☐ DIRECT MATERIALS
- ☐ MAINTENANCE MATERIALS
- ☐ MAINTENANCE SERVICES
- ☐ OPERATING SUPPLIES

	PLEASE ORDER THESE MATERIALS OR SERVICES	DELIVERY WANTED	
QUANTITY	DESCRIPTION	UNIT	TOTAL

QUOTES FROM		REQUISITIONED BY	
QUOTES FROM		APPROVED BY	
QUOTES FROM		ORDER NO.	ORDER DATE

R. W. MITCHELL MANUFACTURING COMPANY

1422 BOSWORTH STREET, S. E.

65-22
514

ANYWHERE, U. S. A._____19____ No. 10000

PAY _____ DOLLARS $ _____

TO THE ORDER OF

R. W. MITCHELL MANUFACTURING COMPANY

TO FIRST NATIONAL BANK
ANYWHERE, U. S. A.

BY SAMPLE CHECK

VICE PRESIDENT

ACCOUNT NUMBER

Sample voucher check to be used for the payment of all expenditures in connection with Budget Control.

R. W. MITCHELL MANUFACTURING COMPANY

ENGINEERS:

The services of professional engineers are necessary in the design of this plant, even though the proposed plant is small.

A correct design is one which provides the greatest economy in the investment of funds and establishes the basis of operation that will be most profitable in the beginning and will also be capable of expansion without expensive alteration.

The addresses of professional engineers who specialize in industrial design, some of whom may be willing to undertake such work on low cost projects overseas, can be secured by reference to the published cards in various engineering magazines. They may also be reached through their national organizations, one of which is the

National Society of Professional Engineers
2029 K Street, Northwest,
Washington 6, D. C.

Manufacturers of industrial equipment employ engineers familiar with the design and installation of their specialized products. These manufacturers are usually willing to give prospective customers the benefit of technical advice by those engineers in determining the suitability of their equipment in any proposed project.

The equipment manufacturers also know, and can recommend, professional engineers in private practice, who are willing and able to provide appropriate consulting services.

TRAINING:

Manufacturing an inferior quality of product during the training period could create sales resistance that might be difficult to cope with later. To avoid such possibilities, the quality of the product should be maintained at all times, including the training period.

In some areas skilled operators may be available locally. In other areas all the operators may have to be trained.

If skilled operators are not available, adequate training would be assured by using one or more of the following methods:

A. If the plant is designed and installed by a competent engineering firm, the contract should be negotiated, if possible, on a turn-key basis. On this basis the contractor agrees to operate the plant and produce the quality and quantity of the product stated in the contract for an agreed period of time. Such a contract would assure adequate personnel training, since full quantity and quality could not be produced with an untrained organization.

B. The engineering firm that designs and installs the plant can usually make training arrangements to have key personnel placed, for training purposes, in a foreign industry that produces the same type of product. This would provide training for the key personnel while the plant is being installed.

C. If neither of the above methods is possible, then qualified and experienced individuals should be employed for the key positions, either permanently or temporarily, to perform the key operations and assist in training the organization, even if they must be secured outside the country.

D. The manager should have years of successful experience in this type of business and be fully qualified in all phases of management, including the training of employees.

SAFETY:

It must be understood that the manufacture of oxygen and acetylene are highly hazardous operations. For this reason, the two operations should not be located in a single building, but should be separated from each other sufficiently so that an explosion or fire in one will not endanger the other.

The floor in the acetylene plant should be of a non-sparking material. Certain safety precautions in the design of the equipment are mentioned in the discussion of the manufacturing operation and should be carefully adhered to. Manufacturers of the equipment build safety devices into their designs and their recommendations for installation and operation should be followed to the letter.

There is always danger of accident and injury in any industrial plant. Because of this, the manager should take specific action to bring to the attention of each employee the importance of safety precautions and intelligent first aid.

Practically all machines have safety appliances, and the manager should see that these are in good working condition and that the operators are making full use of them.

In addition to constant watchfulness to make sure that all practicable safety precautions are taken, first aid supplies should be readily available. One complete first aid kit should be maintained near the manager's office, and others at appropriate places throughout the plant. Some of the employees should be trained to provide first aid service.

The use of accident posters in the plant have proved to be of value in reducing accidents. It is recommended that such posters be used and that some direct special action be taken by the manager, at least once each month, to bring to the attention of all personnel the importance of safety precautions.

A fire brigade should be established and each member trained as to his responsibility in case of fire. Fire drills should be conducted periodically.

It is recommended that the employees be encouraged to offer suggestions or recommendations relative to prevention of accidents, removal of fire hazards and maintaining general interest in all safety factors.

OTHER CONSIDERATIONS

There are other important subjects, shown below, that should be fully investigated and considered. Information on these subjects is usually available from such sources as banks, government agencies, exporters and importers, wholesalers, retailers, transportation companies and manufacturers.

MATERIALS AND SUPPLIES

1. Are all materials and supplies available locally?
2. Is the local material market competitive?
3. Is satisfactory delivery of local materials assured at reasonable prices?
4. What materials and supplies must be imported?
5. Are they available in world markets at competitive prices?
6. Would prompt delivery of imported materials and supplies be assured so that large inventories would not be required?

MARKET FACTORS

1. Is there already a demand for the produce?
   - A. Who are the principal consumers?
   - B. Who are possible new consumers?

2. How is demand for the product now satisfied?
   - A. By local production? If so, what is the volume of annual production?
   - B. What percentage of consumption is filled by local production?
   - C. By imports? If so, what is the volume of annual imports?
   - D. What percentage of consumption is met by imports?
   - E. From what areas are imports derived?

3. What is the estimated annual increase in local consumption over the next five years?
   - A. How were such estimates made?
   - B. By reference to official figures on population growth, family budgets, imports, etc. ?
   - C. By consultation with trade or industry, ministries, associations, bankers, commercial houses, wholesalers, retailers, industrial consumers, etc. ?

4. If the product is already being manufactured, can the existing and estimated future local market absorb production of the new plant without price-cutting or other dislocations?

5. Would the estimated sales price and quality of the new product make it competitive with an imported equivalent?
   A. After adjusting cost to local conditions, is the estimated sales price of the product so high that tariff protection is necessary to protect it from imports?

EXPORT MARKETS:

1. Could the product compete in export markets on the basis of price, quality and dependability of supply?
2. Can export markets for the product be developed?
3. If so, in what areas and in what annual volume?
4. What procedures would be necessary to develop export markets?
5. What would it cost?

MARKETING PROBLEMS:

1. In calculating costs of the product, has adequate allowance been made for the expense of a sales department, advertising and promotion that might be required?

2. Do marketing and distribution facilities for the product exist?
   A. If not, can they be set up?
   B. What would it cost to do so?

3. Will the product be sold to:
   A. Wholesalers?
   B. Retailers?
   C. Direct to consumer?
   D. Other industries?
   E. Government?

ECONOMIC FACTORS:

1. How much foreign exchange (and in what currency) is required to import machinery, equipment and supplies:
   A. How much foreign exchange (and in what currency) is required for annual interest payments and amortization of any loans contracted to import machinery and equipment, or for payment of royalties and technical services?
   B. How much foreign exchange (and in what currency) is required for annual import of raw materials and supplies?
   C. What are estimated annual foreign exchange earnings and in what currencies?
   D. Has careful consideration been given to the possibility of depreciation in the foreign exchange value of the local currency?
   E. Has careful consideration been given to the possibility of import controls, or restrictions on availabilities of foreign exchange necessary to operate the business?
   F. What benefits would the new business bring to the economy in the use of local raw materials: in employment and in technology?
   G. Do dependable facilities exist for transportation, power, fuel, water and sewage?
      (1) If not, can existing deficiencies be eliminated satisfactorily?
      (2) What would be the cost to do so?

PERSONNEL:

1. Can the problem of training competent management and supervisory personnel be solved?
   A. Also, the training of skilled labor?
   B. Is technical advice available in the locality?
   C. If not, where can it be obtained and what will it cost?

LAWS AND REGULATIONS:

1. Do existing labor laws, government regulations, laws and taxes favor establishment of new business?
   A. If not, can existing obstacles be removed?
   B. If so, how and when?

FINANCIAL FACTORS:

1. Technical advice on selection of machinery and equipment.
   A. In selecting the machinery and equipment for the new plant, have reputable and competent engineers and technicians been consulted?
   B. Have they been asked for advice on the most suitable types of machinery and equipment for the process and locality?
   C. Have they carefully compared costs of various suppliers?
   D. Credit terms offered purchasers?

FINANCIAL REQUIREMENTS OF THE PROJECT:

1. In estimating the cost of the project, has careful consideration been given to:
   A. The effect on costs of delays in construction schedules?
   B. In delivery and installation of machinery and equipment?
   C. In import of essential raw materials and supplies?

2. In calculating cash flow and working capital requirements, has careful consideration been given to:
   A. Maintaining adequate inventories of raw materials?
   B. Supplies and spare parts?
   C. Seasonal fluctuations in the business?
   D. The time required to liquidate credit sales to customers and bad debts?
   E. The period necessary to get the plant into production?
   F. Cash required to amortize its principle loans?

3. If the economy is in a period of inflation, has full allowance been made for the influence of rising prices and wages on the cost of the project and on working capital requirements?

SHORT TERM BANK CREDITS:

1. Has it been possible to make arrangements with local banks to finance short-time working capital requirements of the business?

FINANCIAL PLAN:

1. Has a definite plan to finance the project been worked out?
   A. Is sufficient capital available locally?
   B. If not, what is the plan to obtain the required capital?

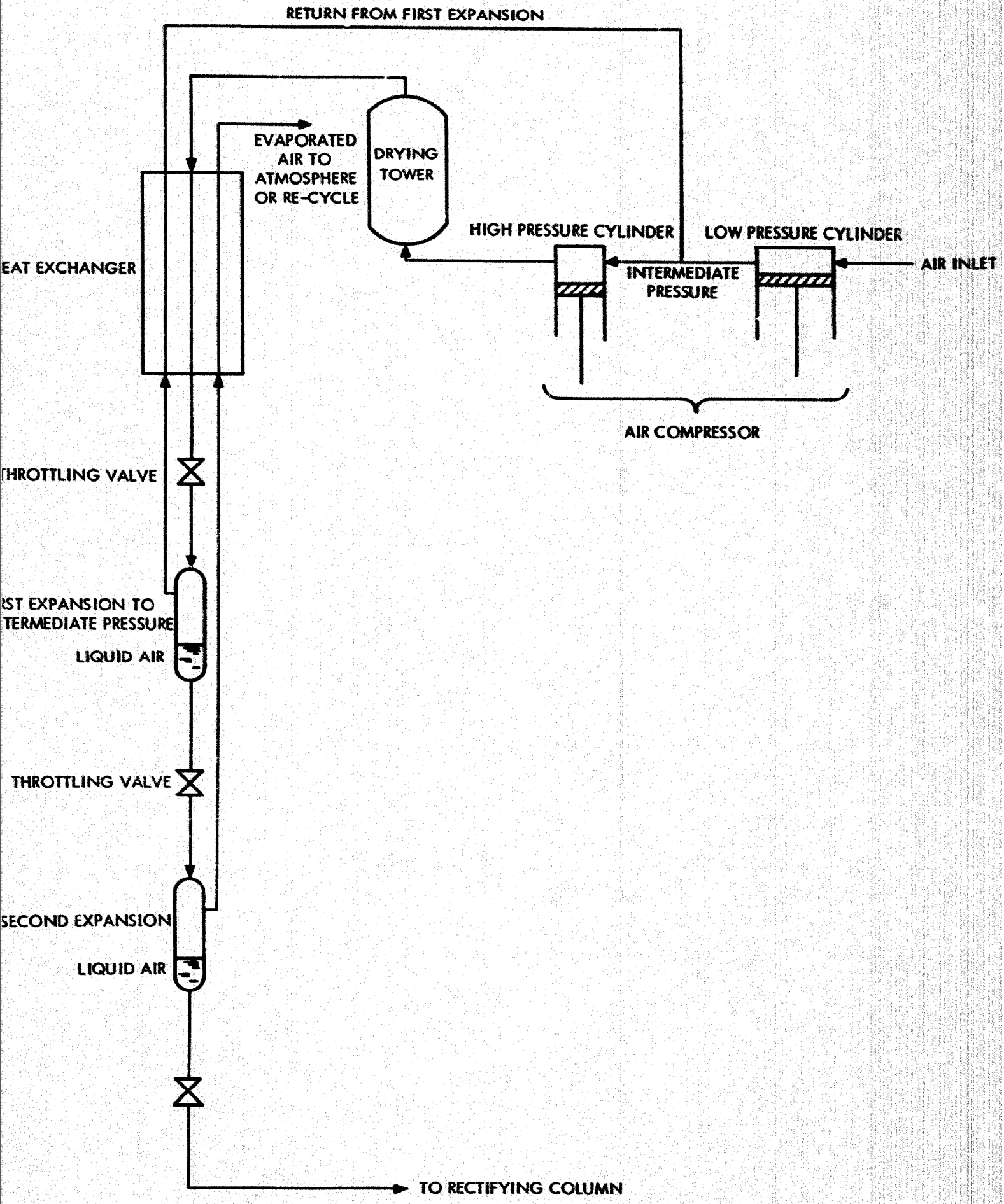

FIGURE 1. SCHEMATIC LINDE PROCESS FOR LIQUEFYING AIR

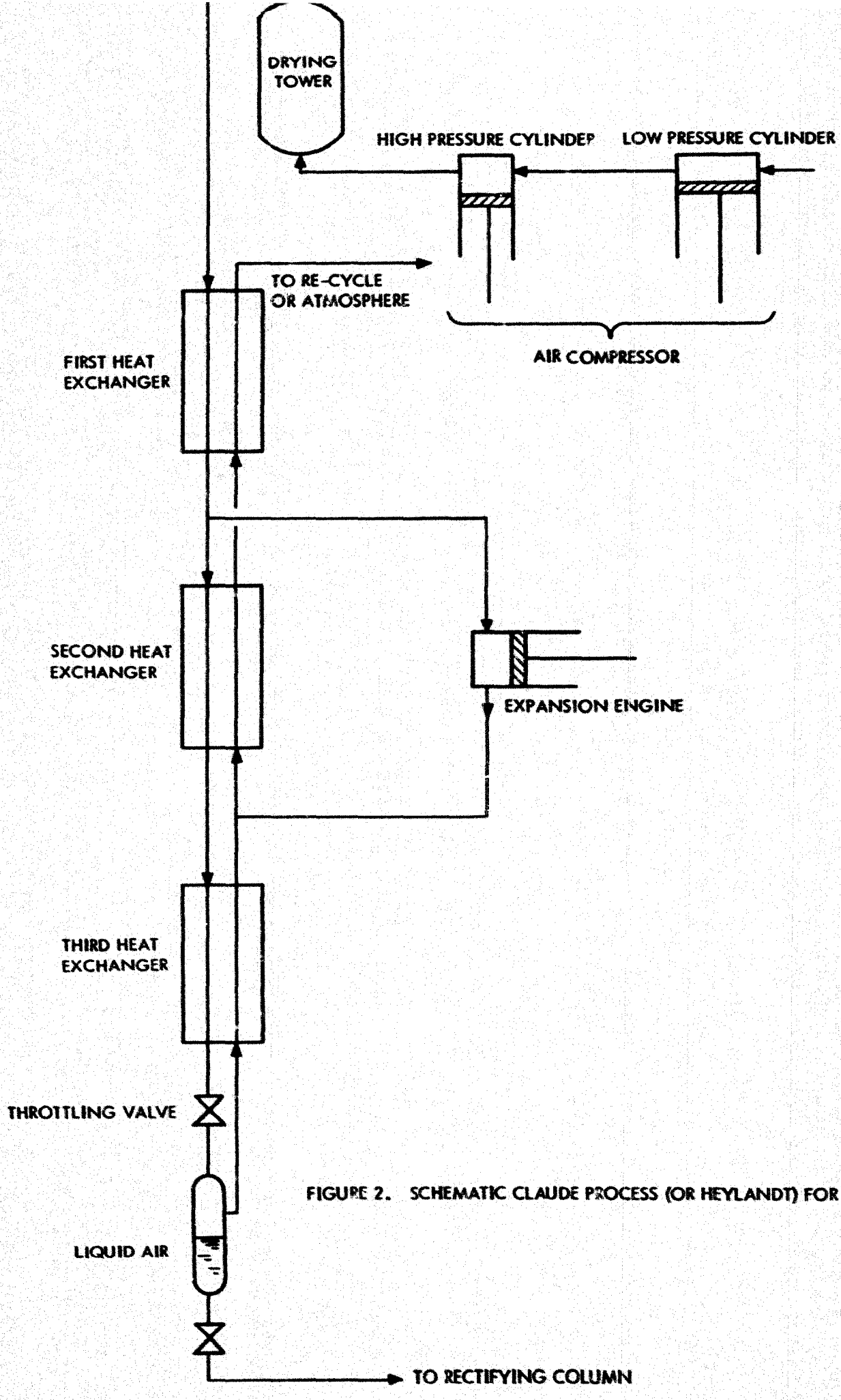

FIGURE 2. SCHEMATIC CLAUDE PROCESS (OR HEYLANDT) FOR LIQUEFYING AIR

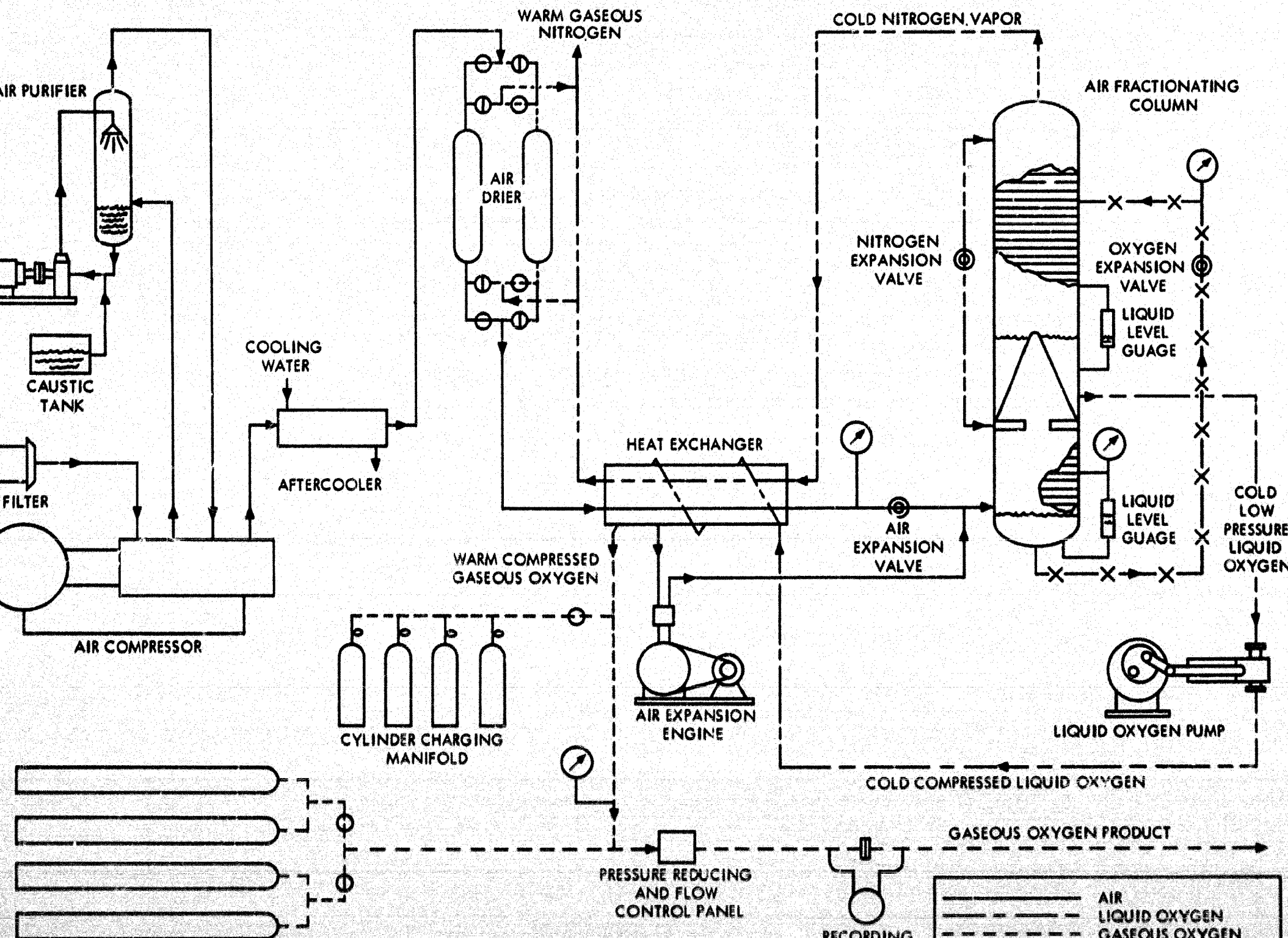
WARM GASEOUS NITROGEN
COLD NITROGEN VAPOR
AIR PURIFIER
AIR FRACTIONATING COLUMN
AIR DRIER
NITROGEN EXPANSION VALVE
OXYGEN EXPANSION VALVE
LIQUID LEVEL GUAGE
CAUSTIC TANK
COOLING WATER
HEAT EXCHANGER
FILTER
AFTERCOOLER
LIQUID LEVEL GUAGE
COLD LOW PRESSURE LIQUID OXYGEN
AIR EXPANSION VALVE
WARM COMPRESSED GASEOUS OXYGEN
AIR COMPRESSOR
AIR EXPANSION ENGINE
LIQUID OXYGEN PUMP
CYLINDER CHARGING MANIFOLD
COLD COMPRESSED LIQUID OXYGEN
GASEOUS OXYGEN PRODUCT
PRESSURE REDUCING AND FLOW CONTROL PANEL
RECORDING
AIR
LIQUID OXYGEN
GASEOUS OXYGEN

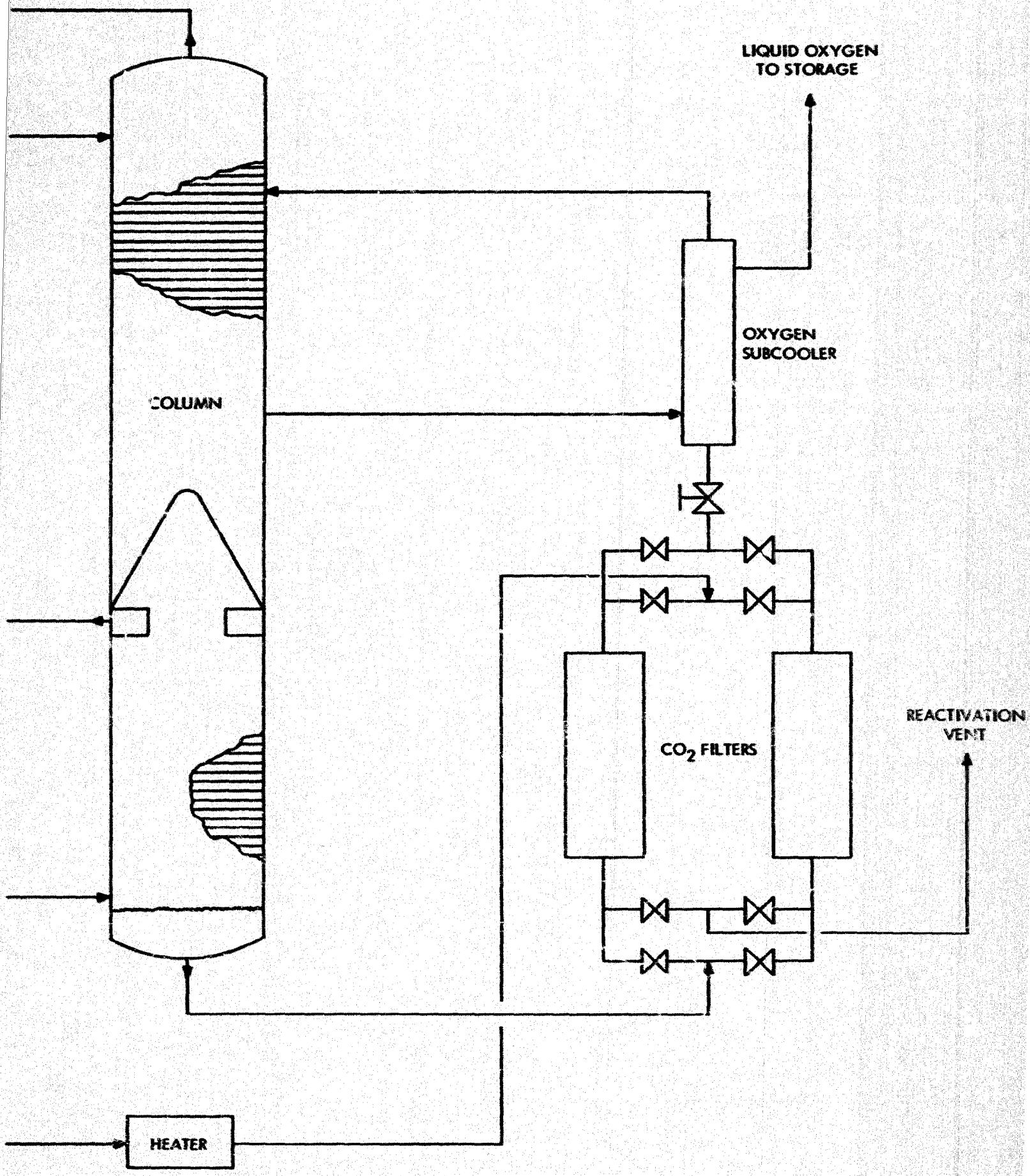

FIGURE 3A. AIR SEPARATION EQUIPMENT WITH CO_2 FILTRATION

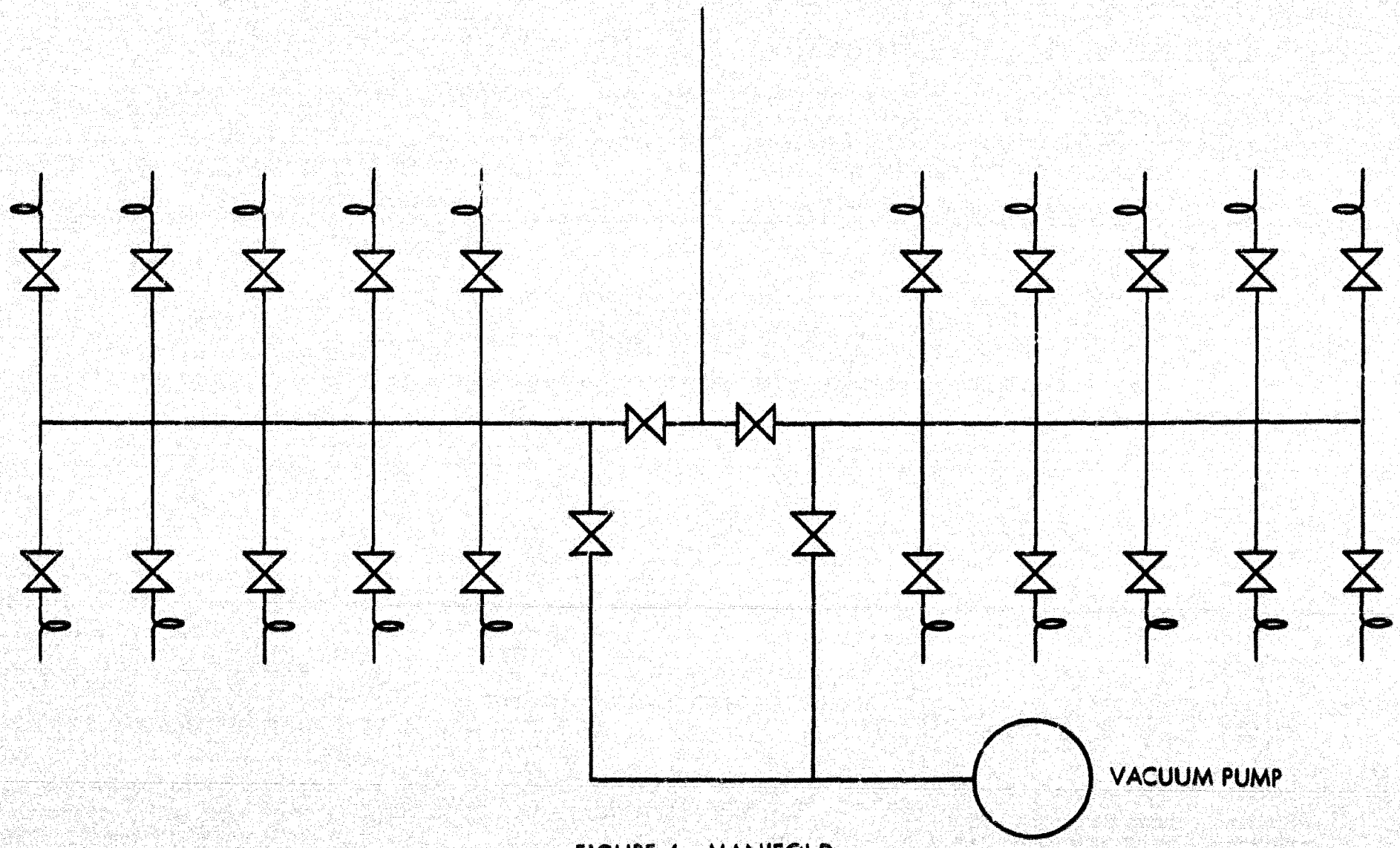

FIGURE 4. MANIFOLD

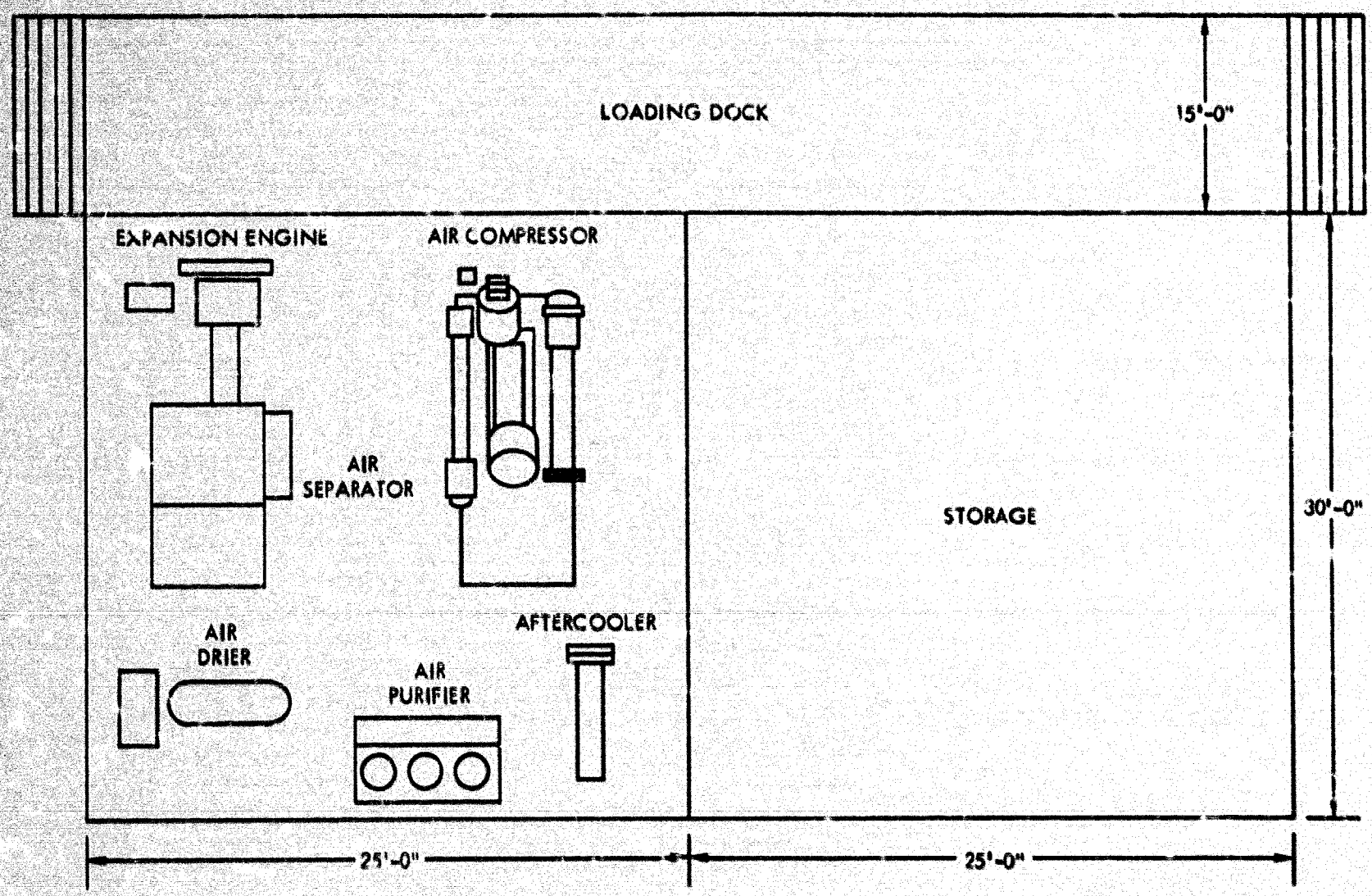

FIGURE 5. PLANT LAYOUT

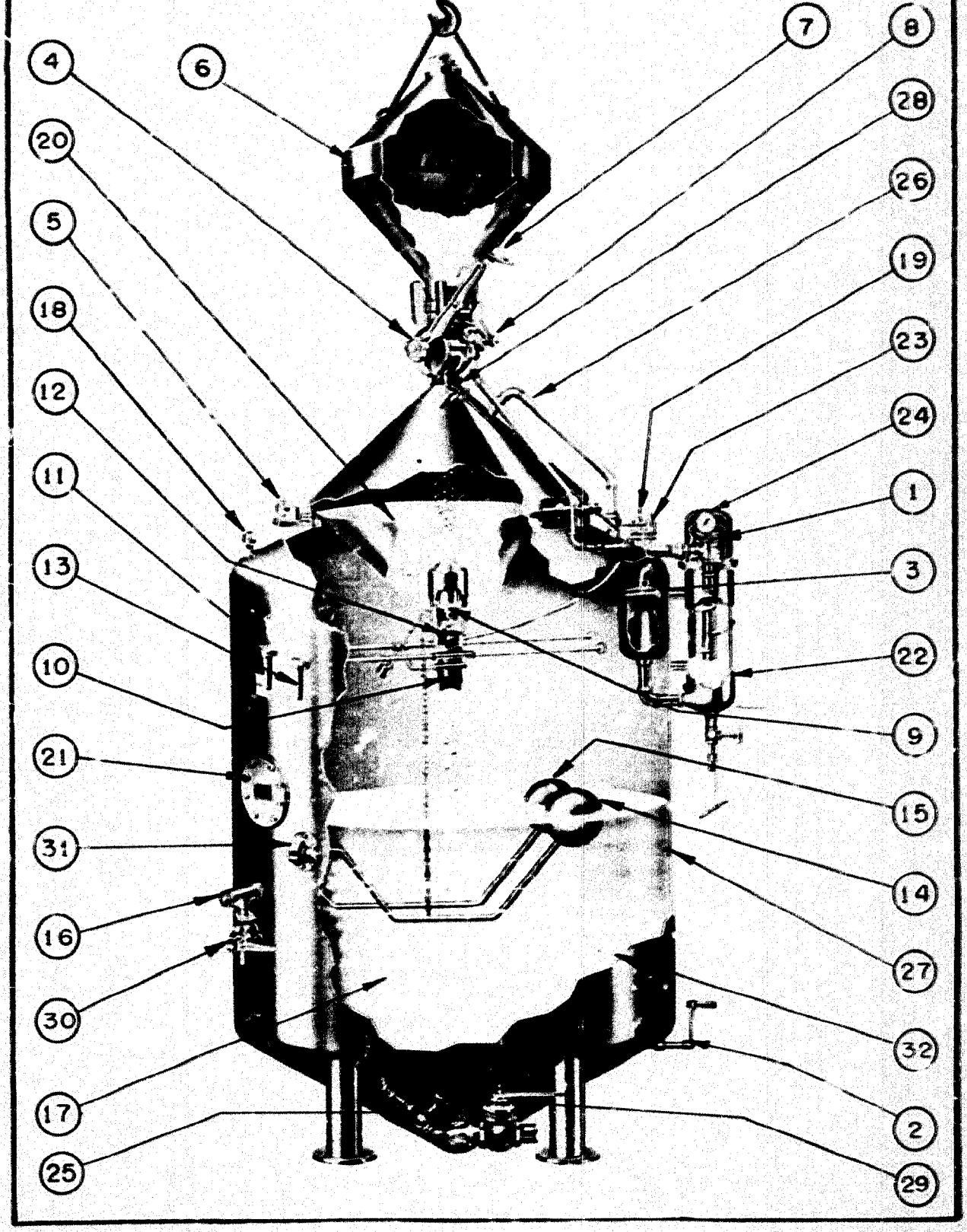

Figure 6. Acetylene Generator

LEGEND

1. ACETYLENE FILTER
2. AGITATOR
3. ATMOSPHERIC VENT LINE
4. CARBIDE CHARGING VALVE
5. CARBIDE CONTENTS INDICATOR
6. CHARGING HOPPER
7. CHARGING-HOPPER PRESSURE GAUGE
8. CHARGING-HOPPER VENT VALVE
9. FEED-CONTROL UNIT
10. FEED TUBE
11. FEED-TUBE HANDLE
12. FEED VALVE
13. FEED-VALVE HANDLE
14. FLOAT, WATER LEVEL INDICATOR AND FEED TUBE
15. FLOAT, WATER SHUTOFF VALVE
16. FLOAT-OPERATED WATER SHUTOFF VALVE
17. GENERATING CHAMBER
18. GENERATING-CHAMBER PRESSURE GAUGE
19. GENERATING-CHAMBER RELIEF VALVE
20. GENERATOR HOPPER
21. HANDHOLE COVER
22. HYDRAULIC BACK-PRESSURE VALVE
23. HYDRAULIC BACK-PRESSURE VALVE RELIEF VALVE
24. LINE PRESSURE GAUGE
25. LOW-LEVEL WATER FILL VALVE
26. PRESSURE EQUALIZING LINE
27. "REFILL" LEVEL REFERENCE MARKER
28. RELIEF-VALVE TRIP MECHANISM
29. RESIDUE DRAIN VALVE
30. WATER FILL VALVE
31. WATER LEVEL INDICATOR
32. WATER SHELL

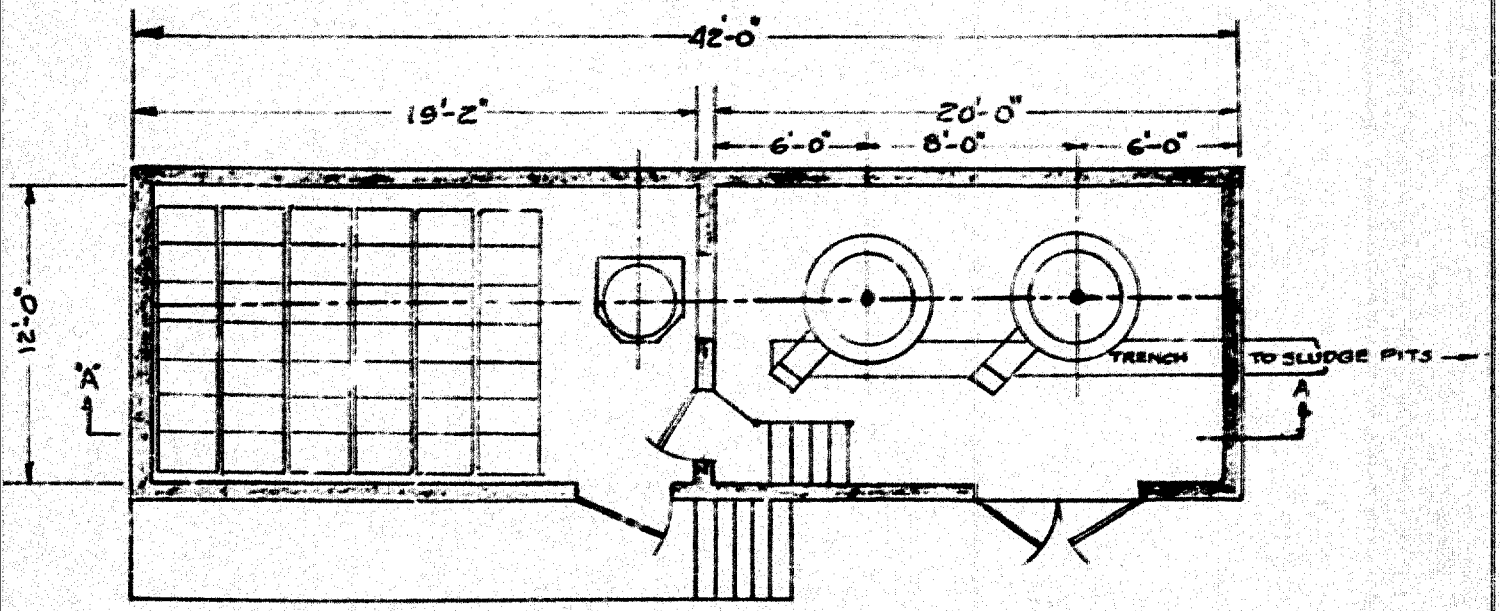

FLOOR PLAN

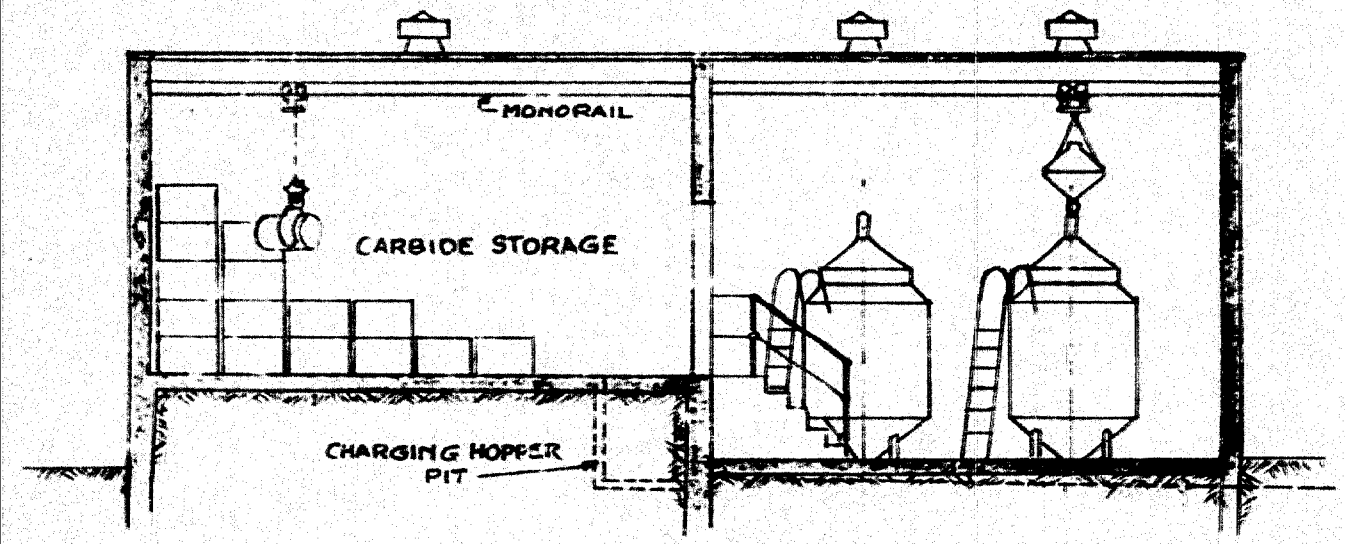

SECTION "A-A"

FIG. 7 TYPICAL ACETYLENE GENERATOR BUILDING