AGENCY FOR INTERNATIONAL DEVELOPMENT
WASHINGTON, D. C. 20523
BIBLIOGRAPHIC INPUT SHEET

FOR AID USE ONLY
BATCH 81

1. SUBJECT CLASSIFICATION
A. PRIMARY: Serials — Y-AN20-0000-GG50
B. SECONDARY: Food production and nutrition--Farm equipment--Tropics

2. TITLE AND SUBTITLE
Rice machinery development and industrial extension; semi-annual progress report,July-Dec.1977

3. AUTHOR(S)
(101) IRRI

4. DOCUMENT DATE: 1978
5. NUMBER OF PAGES: ~~62p.~~ 64p.
6. ARC NUMBER: ARC

7. REFERENCE ORGANIZATION NAME AND ADDRESS
IRRI

8. SUPPLEMENTARY NOTES *(Sponsoring Organization, Publishers, Availability)*
(Research summary)

9. ABSTRACT

10. CONTROL NUMBER
PN-AAF-466

11. PRICE OF DOCUMENT

12. DESCRIPTORS
Agricultural machinery
Intermediate technology
Rice

13. PROJECT NUMBER

14. CONTRACT NUMBER
AID/ta-C-1208 GTS

15. TYPE OF DOCUMENT

AID 590-1 (4-74)

AID/ta-C-1208 GTS
IRRI
PN-AAF-466

Semiannual Progress Report No. 25
July 1 – December 31, 1977

RICE MACHINERY DEVELOPMENT AND INDUSTRIAL EXTENSION*

*AID/ta-C-1208

AGRICULTURAL ENGINEERING DEPARTMENT
THE INTERNATIONAL RICE RESEARCH INSTITUTE
P.O. BOX 933 MANILA PHILIPPINES

ISSN 0115-2610

IRRI Rice Machinery Development

Primary objectives of the machinery development program are increasing the income and welfare of small rice farmers and fostering farm equipment manufacturing in developing countries. Improved mechanical technologies contribute directly to these goals by increasing food production through increased yields, reductions in field and post-production losses, increased cropping intensity, and improvement in quality and value of agricultural products. Appropriate machines can also reduce costs – a direct benefit to the low-income rice consumer. Mechanization based on local production conserves foreign exchange, expands opportunities in rural-based industries, strengthens linkages between agriculture and other sectors of the economy, and enhances training opportunities in small-scale manufacturing.

Program procedures begin by developing machines that satisfy two major conditions. First, designs must be compatible with the technical and economic needs of small farmers who use them. Second, the manufacture and servicing of the machines must be within the technical capabilities of indigenous small and medium-scale machine shops. Drawings, design information, and limited technical support are given free of charge to manufacturers who want to produce IRRI designs on a commercial basis, agree to the conditions of a Memorandum of Agreement, and provide information on their manufacturing facilities and marketing plans. IRRI retains worldwide distribution and patent rights for all designs developed at IRRI and does not grant exclusive manufacturing rights or licenses.

Training opportunities include a two-week engineering course that is conducted semiannually. Participants are expected to develop competency in the operation, maintenance, and manufacturing aspects of IRRI designs. Enrollment is limited to 12 persons per class.

Financial support for the development program comes from the IRRI budget which is funded by the Consultative Group on International Agricultural Research. Industrial extension projects in Pakistan, Philippines, and Thailand are supported by a United States Agency for International Development contract.

Location of the main research and development facility is the International Rice Research Institute, Los Baños, Philippines, with national liaison links found in countries throughout Asia, Latin America, and Africa. Reports describing program activities are issued semiannually and may be obtained upon request.

Agricultural Engineering Department
International Rice Research Institute
P. O. Box 933, Manila, Philippines

LIAISON OFFICES

IRRI/PAK Machinery Program
c/o LAPSA, P. O. Box 1237
Islamabad, Pakistan

IRRI/THAI Machinery Program
P. O. Box 2453
Bangkok, Thailand

Table of Contents

Title	Page
Introduction and Summary	1
Design and Development	4
Rotary tiller attachment for the 6-8 hp tiller	4
Rice transplanter	5
Multicrop upland seeder	6
Windmill/piston pump	7
Double acting piston pump	7
Plow-sole granular chemical applicator	8
Portable thresher	8
Harvester attachment for power tiller	9
Producer gas generator	9
Improvement of Engleberg rice mill	10
Tables and figures	11
Mechanization Research	21
Compacted soil studies	21
Transplanter field trials	21
Product development tests	22
Tables and figures	24
Mechanization Systems	27
IRRI-UPLB-BRBDP rice post-production technology project	27
Household and village storage studies	29
Power tiller survey	29
Tables and figures	33
Industrial Extension	41
Introduction	41
International agricultural machinery workshop	41
Proposed IRRI industrial extension project in Indonesia	42
Technical consultancy and manufacturing cost reduction project	42
Grain dryer value analysis	44
Industrial extension in the Philippines	44
Industrial extension in Thailand	45
Industrial extension in Pakistan	47
Tables and figures	48
Personnel list	57

INTRODUCTION AND SUMMARY

The 6-8 hp power tiller was released to manufacturers during this reporting period. The portable thresher which was released earlier is now capable of threshing sorghum with the use of rubber flaps in place of some of the pegteeth.

New development projects initiated during this period include a producer gas generator and a rotary tiller attachment for the power tiller. Work continues on the rice transplanter, multicrop seeder, plow-sole applicator and rice mill improvement.

The compacted soil study is in its tenth season. The soil was allowed to dry for a one-month period before land preparation for the tenth crop resulting in a marked reduction in the depths at which the cone indices were measured. This allowed use of the 4-wheel tractor for the first time since crop six.

An operational and economic study that compared power transplanting, manual machine transplanting and hand transplanting showed that power transplanting requires 40% of the labor needed for hand transplanting. However, high machine cost requires that it plant 32 ha annually to compete economically with hand transplanting at current Philippine wage rates.

Mr. Charles J. Moss, formerly Director of the National Institute of Agricultural Engineering, United Kingdom, arrived in October to become Head of Agricultural Engineering. His experience in agricultural research will be a valuable asset to the department.

Twelve engineers attended the two-week training course in October and 13 trainees are invited to the course scheduled for March, 1978.

A study in household and village storage facilities was initiated and preliminary surveys indicate a wide variation in storage facilities. The effects of different storage facilities on grain deterioration and loss will be investigated.

USAID sponsored an International Machinery Workshop at IRRI in November to assemble the network cooperators and others associated with the IRRI Machinery Development and Industrial Extension Program. Participants from 17 countries in Asia, Africa, and the Americas attended.

The Pakistan and Thailand Industrial Extension Project teams have modified the IRRI thresher to improve performance with local crop varieties. 1977 production of the thresher increased two and one-half times over that of 1976.

One issue of the IRRI Farm Machinery Newsletter was distributed and operator's manuals for the power tiller and portable thresher were published during this period.

Papers and Publications

Kim, K. U. 1977. "Field Tests of Three Transplanting Systems". Paper No. 77-07. September.

Kim, K. U. 1977. "An analytical Method for Kinematic Analysis of the Planting Mechanism of a Rice Transplanter". Paper No. 77-08.

McMennamy, J. A. and J. S. Policarpio. 1977. "Development of a Portable Axial-Flow Thresher". Paper No. 77-06. Paper prepared for presentation at the International Grain and Forage Harvesting Conference, Ames, Iowa. September 25-29.

Duff, B. 1977. "Mechanization and Use of the Modern Rice Varieties". Paper No. 77-10 (Revised). Paper presented at the Conference on the Consequences of the Improved Rice Technology in Asia. Los Baños, Philippines. December, 1976.

Duff, B. 1977. "The Economics of Small Farm Mechanization in Asia". Paper No. 77-11. Paper presented at ORD/ASPAC/FFTC sponsored Lecture Workshop on the Problems of Small Farm Mechanization, Suweon, Korea. August 12-17.

Toquero, Z. F. and B. Duff. 1977. "Survey of Rice Milling and Processing Practices Among Rice Millers in Central Luzon". Paper No. 77-15 (Revised).

Moss, C. J. 1977. "Engineering Research & Development and Design at IRRI". Paper presented at an FAO Meeting of Task Force on Rice Mechanization, Rome. December 13-14.

PROGRESS REPORT NO. 25
July 1 to December 31, 1977

The following projects were active during the reporting period:

Design and Development (C. Moss, J. McMennamy)

Rotary tiller attachment for the 6-8 hp tiller	I. Manalili, G. Espiritu
Rice transplanter	I. Manalili, K. Kim
Multicrop upland seeder	M. Aban
Windmill/piston pump	G. Salazar
Double-acting piston pump	G. Salazar
Plow-sole granular chemical applicator	G. Salazar, A. Resurreccion
Portable thresher	J. Policarpio, G. Espiritu S. Gutierrez, S. Labro
Harvester attachment for the power tiller	G. Espiritu
Producer gas generator	L. Kiamco
Improvement of the Engleberg rice mill	A. Caballes

Mechanization Research (D. Kuether)

Compacted soil studies	D. Kuether, F. Cabrales
Transplanter field trials	K. Kim, F. Cabrales
Product development tests	J. Arboleda, R. Dayrit, F. Cabrales, S. Labro

Mechanization Systems (B. Duff)

IRRI-UPLB-BRBDP rice post-production technology project	I. Camacho, P. Hidalgo C. Maranan, L. Ebron
Household and village level storage studies	H. Takai
Power tiller survey	F. Juarez

Industrial Extension (S. Barton, A. Khan, J. McMennamy)

Proposed IRRI industrial extension project in Indonesia	V. R. Reddy
Technical consultancy and manufacturing cost reduction project	N. Langam, H. Manaligod
Grain dryer value analysis	J. Policarpio, J. Arboleda, H. Manaligod
Industrial extension in the Philippines	Project staff (Table 16)
Industrial extension in Thailand	Project staff (Table 16)
Industrial extension in Pakistan	Project staff (Table 16)

DESIGN AND DEVELOPMENT

Rotary tiller attachment for the 6-8 hp tiller

The 6-8 hp tiller design has been released to manufacturers with a moldboard plow and comb harrow, implements commonly used for land preparation in many parts of Asia. A rotary tiller is being developed for the power tiller to provide increased versatility and thereby increased customer acceptance, especially in areas where farmers practice dryland tillage for their rice crop or the upland crops that are grown in rotation with rice (Fig. 1). Axle-mounted tiller blades perform adequately in light soils but in dry heavy soils machine control is extremely difficult and may not be acceptable to most farmers. Non-traction dependent implements such as a rotary tiller also show promise in some difficult wet field conditions.

Two B-section V-belts were used on the intermediate drive with a belt tightener serving as the clutch. The drive is taken from the right side of the tiller input shaft which was increased in size from 20 to 25 mm dia to accommodate the added load. A sealed center drive chain transmission with a 1.4 speed ratio is used for the final drive. The input and output shafts are identical so the transmission can be inverted to change the rotor speed from 225 to 350 rpm.

The rotary tiller can be attached to the tiller by the hitch-pin and two stop-bolts. A skid is located at the rear to control the tillage depth. Four rows with three blades per row can be mounted on the rotary tiller shaft to give a maximum tillage width of 66 cm.

The IRRI power tiller has a field speed of about 3.2 km/hour; however, a forward speed of 1.5 km/hour is needed for rotary tiller operation. To avoid changing the power tiller transmission it was necessary to modify the belt drive by adding an intermediate two-groove idler pulley between the engine and the input shaft of the tiller transmission (Fig. 2).

The idler pulley can be easily reversed on the idler pulley swing arm to change the pulley arrangement and obtain four speeds with a minimum of 1.5 km/hour and a maximum of 16 km/hour. A coil spring is wound around the bushing of the idler swing arm with one end secured to the idler assembly mounting bracket and the other to the idler swing arm, forcing the whole idler assembly away from the engine pulley. This arrangement provides tension on the belt between the engine and idler pulleys. A belt tensioning clutch is installed on the belt between the idler pulley and the transmission input shaft pulley. It is spring loaded to maintain belt tension under varying loads as the belt stretches and wears.

The prototype rotary tiller functioned satisfactorily in preliminary tests conducted in upland and lowland fields; however, short belt life of the rotary tiller drive was a problem. This drive has been redesigned to utilize a roller chain drive and dog clutch for disengaging the drive to the rotary tiller. To change speed this intermediate chain drive can be inverted instead of the final drive as in the previous arrangement. Field tests will resume after this modification is fabricated.

Rice transplanter

Our feasibility study of powered transplanters indicates that it may be too costly for small rice farmers and its high capacity has also caused concern about high labor displacement. Accordingly, it was decided to temporarily suspend work on a power transplanter until the economic and social aspects are clearer and shift efforts to developing a manual transplanter which will cost less than a power transplanter and should better meet the needs of small rice farmers. Our field trials (see Mechanization Research section) show that a manual transplanter can reduce planting time significantly over hand transplanting, so it can be very useful in areas suffering from labor shortages during the transplanting season.

During the reporting period, work was concentrated on redesigning a Chinese-type, 5-row transplanter (Fig. 3) to make it less expensive and easier to operate. The machine consists of a wooden skid which supports the main frame, a seedling tray, and a tubular frame that holds five pincher-type pickers. This frame is fixed to a handle called the transplanting arm. Another handle, the steering arm, is secured to the main frame and is used for pulling and maneuvering the machine during operation. The machine is used for transplanting wet bed or washed root-type seedlings which are arranged in layers on the tray with the roots in contact with the tray surface. A pawl and rachet mechanism actuated by the transplanting arm moves the tray back and forth laterally.

The machine was redesigned to simplify the picking and planting mechanism. The original machine requires four motions of the transplanting arm: to open the picker fingers, pick the seedlings from the tray, push the seedlings into the soil, and then release the planted seedlings. This operation is rather complicated and tiring for the operator. Only two motions are required in the redesigned machine. The downward stroke picks the seedlings from the tray and plants them into the soil, and the upward stroke releases the planted seedlings. This was accomplished by replacing the pincher-type pickers with the simple 3-point pickers used in the previous IRRI designed experimental transplanter (Fig. 4). The transplanting arm mechanism was replaced by a simple pivot arm with the lower end pinned to the main frame and the pickers and handle that actuates the arm attached to the upper end.

Operation of the modified machine in the field showed that during the upward stroke the picker tips touched the seedlings, lifting them slightly from the tray. This disturbed the seedling arrangement causing the picker to miss during the downward picking stroke. To eliminate this problem the picker will be relocated to avoid seedling contact during its upward travel.

Most transplanters employ a 4-bar crank and rocker mechanism for planting the seedlings. An analytical method to determine the kinematic quantities of this type mechanism was developed and applied to the analysis of the planting mechanism of rice transplanters. Using 3 x 3 matrices, equations based on the geometric transformation of a coordinate system attached to each linkage were derived for angular velocity and acceleration of the coupler and rocker links.

The position vector of any point on a link in the crank and rocker mechanism can be expressed with respect to a reference coordinate system by a matrix equation. Successive differentiation of this equation with respect to time was used to yield equations for velocity and acceleration of the point. Numerical results were obtained which describe the position, velocity, and acceleration of the picker fork or tip for three different transplanter designs -- two commercial machines and the IRRI prototype. In addition, the external torque necessary to drive these three transplanters was measured experimentally. This information is being used in our transplanter development program.

Multicrop upland seeder

The multicrop upland seeder is in the third prototype stage. In addition to the features previously reported, a divided hopper and modified seed plate now allows placement of fertilizer in the furrow with the seed. The machine has been redesigned for weight reduction and improved compactness (Fig. 5).

The main frame assembly is shorter and made of lighter material, rectangular tube of 15 mm wall (16 gage) in place of two angle bars welded together to form a square tube. The reduced weight and increased compactness makes the unit easier to maneuver at the row ends which allows narrower headlands.

A divider was placed in the hopper so both seed and fertilizer can be carried. This design enables use of one hole in the seed plate for seed and other hole for fertilizer (Fig. 6). The principle of metering used on the second prototype was retained wherein the seed-fertilizer plates are pinned to a common oscillating frame which is driven by the cam attached to the presswheel shaft. The cam was modified for easier fabrication and assembly and is designed so placement of the fertilizer is near the seed. Seed and fertilizer pass through a common tube to the furrow with the seed following immediately after the fertilizer has dropped.

A single mechanism is used to raise the furrowers and disengage the cam drive for transport and turning at the row ends. The cam drive is automatically engaged upon lowering the furrowers during planting operations. The frame assembly holding the seed plates is supported by four rollers to reduce friction during oscillation. This frame assembly is installed over a spring loaded seed tube assembly to maintain clearance between the hopper and the plates. A soft, sponge-like material attached to the bottom of the hopper minimizes seed spillage between the hopper and plates during oscillation.

Two kinds of presswheels are being tested to compare their effectiveness in covering the furrows and pressing the soil for better contact with the seed. The presswheels are the original band-type and a split-wheel. The band-type wheel passes directly over the furrows and presses the loose soil on both sides of the furrows to cover the seed. The split-wheel covers the seed and applies pressure at the sides leaving loose soil on top of the seed. Field tests will evaluate the seeder when planting rice, sorghum, corn, and groundnuts and compare labor requirements of planting with the seeder compared to conventional planting methods used by local farmers.

Windmill piston pump

The ground water capacity was very limited at the Tigbauan, Iloilo windmill site so the windmill was transferred to another site in Tigbauan near an irrigation canal where the water level is about 3 to 4 m below field level. It will be irrigating a minimum of 0.3 ha with provisions to increase it to a maximum of 1 ha if the prevailing wind velocity of 15 to 25 km/hour continues.

The windmill at Manaoag, Pangasinan was transferred to Binalonan, Pangasinan because an irrigation system was installed at the former site. At the new site, the water level is 1 m and well output is 150 to 190 l/minute at 3 to 4 m drawdown, but the wind velocity is low at 10 to 15 km/hour so only about 0.2 ha can be irrigated.

The windmill/piston pump installation located in Bo. Rizal, Oton, Iloilo, is producing 45 to 60 l/minute at a lift of 4 to 6 m and is now irrigating approximately 0.2 ha.

At all installations, the perforated V-belts were replaced with regular V-belts and provisions for belt adjustment were added to the existing pump base. Field performance evaluations of these windmills will continue and the future direction of the project will be reviewed.

Double-acting piston pump

The double-acting piston pump described in Semiannual Report No. 24 was life tested for approximately 400 hours with good results.

It was then coupled to an existing IRRI Savonius windmill through a crank placed at the lower end of the windmill shaft and a connecting rod made of 27 mm O.D. (.75 nominal) B.I. pipe (Fig. 7). To accommodate misalignment between the pump and the windmill, a two-row, self-aligning ball bearing was used on the crank pin. After several weeks of continuous operation, the pump began loosing prime due to leakage at the stuffing box and to a lesser extent at the suction valves. Wear on the wooden guide that is pressed into the packing gland was causing the leakage and a more suitable material will be used. The flapper valve design will also be improved before testing is resumed.

Plow-sole granular chemical applicator

The initial development of a moldboard plow-mounted, plow-sole granular chemical applicator was reported in Semiannual Report No. 24. Different designs of a plain roller metering device were tested but found unsatisfactory because surface roughness of the roller significantly affected the discharge and the rate of change in discharge per unit adjustment could not be maintained within tolerable limits.

To make the metering more positive, a fluted roller with provisions to adjust the width of the flutes exposed to the fertilizer was constructed (Fig. 8). The results of metering tests are given in Figure 9 which show a linear relationship between flute width adjustment and discharge rate.

Further modifications and additions were made to improve the applicator's efficiency. The groundwheel diameter was increased to 40 cm for better traction and trash clearance and to help prevent wetting of fertilizer in the hopper by raising the metering roller.

The effectiveness of fertilizer applied with the experimental applicator will be compared with deep placement by a Japanese applicator, fertilizer incorporation during final harrowing, and traditional split broadcast methods during dry season yield trials.

Portable thresher

Modification of the portable thresher for sorghum threshing continued during the reporting period. Nine different arrangements of pegteeth and rubber flaps made from used tire carcasses were tested in both sorghum and rice to determine the best combination of pegteeth and rubber flaps for high threshing capacity, low losses, and easy conversion from one crop to the other (Fig. 10). The concave with staggered rods (reported in Semiannual Report No. 24) was selected because it performed well in both rice and sorghum and is easily converted for rice and sorghum threshing. Unthreshed loss was reduced to less than 1% on all cylinder configurations with rubber flaps (Tables 1 and 2). This is considerably lower than the 3% loss reported by G. E. Fairbanks, et. al. in their study of sorghum threshing losses.

Cylinder configuration A-1 was selected for rice threshing and A-2 was selected for sorghum. Endurance tests indicate that the rubber flaps will thresh 60 to 80t of sorghum before replacement is necessary. Although it is desirable to use one cylinder configuration for threshing both sorghum and rice, the tests in rice showed a significant capacity reduction with the use of flaps and a larger percentage of material passed through the concave (Table 2).

The effect of the stripper bars was evaluated for the arrangements using only pegteeth at the feed section. It was found that stripper bars are required when threshing tall varieties, which tend to wrap around the threshing drum, and hard threshing varieties which require a more aggressive threshing action. The final design of the sorghum threshing cylinder and concave combinations was sent to interested cooperating manufacturers for their comments.

Tests of the mechanical screening system attachment of the portable thresher showed that the air blast from the engine-mounted fan had too much turbulence to effectively winnow the grain falling from the screen. A new approach using a centrifugal blower and oscillating screen has been designed, is being fabricated, and will be tested in early 1978.

Harvester attachment for the power tiller

The proposed harvester attachment for the 6-8 hp power tiller was reported in Semiannual Report No. 24. Design and layout drawings are complete with minor redesign of the drive system required to facilitate easy changing of the engine-to-jack shaft V-belts.

The harvester is expected to operate during the rainy season when water is standing in the field, a condition in which imported combines often encounter mobility problems. Although estimated weight of the harvester-tiller combination is about 300 kg, a tiller ballasted to 20% over that weight exhibited no mobility problems in a flooded, recently harvested paddy field. Preparation of working drawings and subsequent fabrication of a prototype are planned for 1978.

Producer gas generator

Evaluation of the results of the steam engine project reported in Semiannual Report No. 24 and consideration of the comparative advantages of systems that can produce a fuel directly usable in existing internal combustion engines led to temporary suspension of the steam engine work and a feasibility study of producer gas generation.

Review of the literature and visits to the crop residue gasification projects at the University of the Philippines and University of California revealed that high tar content in the gas and process control are major problems.

To overcome the high tar content problem a dual-mode gas generator was designed and constructed (Fig. 11). After reaching a certain theoretical operating temperature (500-1000°C) the volatile matter in rice straw consisting of tar, CH_4, H_2, H_2O and O_2 is evaporated, collected and burned completely with air in the combustion chamber, forming CO_2, O_2 and N_2. Two-thirds of the hot flue gas which is now free of tar flows downward through the reduction chamber reacting with the carbon (charred rice straw) to form producer gas (CO, H_2, CO_2 and N_2). The amount of CO in the gas depends on the temperature and varies from 20% to 40% by volume of the gas produced. The remaining one-third of the hot flue gas moves upward to distill the volatile matter of the rice straw to keep the cycle going.

For experimental purposes the air requirement of the gas generator are provided by a motor-driven fan. Producer gas quality will be evaluated by ignition response and flame length tests. If the results are favorable, a gas scrubber and gasoline engine will be attached to test performance of a complete system.

Improvement of the Engleberg rice mill

Preliminary tests have been made on the Engleberg rice mill with the objective of obtaining good quality (high head rice content) milled rice. It was found that a mill using a PVC blade can be used as a polisher to obtain good quality milled rice. A comparative polishing test was conducted using a PVC blade and the standard steel blade. The PVC blade obtained over 90% head rice against 81% for the steel blade at 90% recovery when using 95% whole grain brown rice, but mill capacity was much lower when the PVC blade was used, 75 kg/hour compared to 200 kg/hour with the use of the steel blade. A study on power consumption will be conducted.

A study of grain condition inside the milling chamber reveals that breakage of mature grains occurs during hulling. This agrees with the results obtained by using the Engleberg mill as a polisher alone. Evaluation of the hulling stage of the mill will concentrate on the rotor, screen clearances, and feeding system.

The operation of a rice mill manufactured in the People's Republic of China was observed in Pangasinan Province of the Philippines. This mill is similar to the Engleberg except the rotor has spiral instead of straight ribs. This mill is being used for hulling with polishing being done by an Engleberg mill. A Filipino rice mill owner, also in Pangasinan, has made changes in his mills using the concept of the Chinese mill. He has succeeded in increasing capacity from 600 to 900 kg/hour but rice quality has not improved. Table 3 gives the results of the tests conducted with this mill and the Chinese mill. The results of these tests support the conclusion that most breakage occurs during the hulling stage in a single-pass Engleberg mill.

Table 1. Sorghum Threshing Test Results.

Configuration	Construction 1/ Feed Section	Construction 1/ Separation Section	Capacity kg/h 2/	Unthreshed Loss % 3/	Separation Loss %	Total Loss %	Purity % 4/
A-1	pegs	pegs	937	2.56	1.78	4.34	88
A-1S	pegs w/ strippers	pegs	936	2.57	1.70	4.26	87
A-2	pegs	1/2 pegs & 1/2 flaps	999	0.50	1.07	1.55	88
A-2S	pegs w/ strippers	1/2 pegs & 1/2 flaps	1008	0.70	1.24	1.94	88
A-3	pegs	flaps	1019	0.54	1.22	1.76	90
A-3S	pegs w/ strippers	flaps	1101	0.60	1.09	1.70	90
B-4	1/2 pegs & 1/2 flaps	1/2 pegs & 1/2 flaps	1013	0.62	1.24	1.87	90
B-5	1/2 pegs w/ strippers	flaps	1040	0.78	1.04	1.81	92
C-6	flaps	flaps	1004	0.65	1.43	2.08	91

Cylinder speed - 12.76 m/s
Variety - SG-5 and Cosor 3
M.C. - 31% (Ave.)
Power source - air-cooled gasoline engine rated 5 hp.

1/See fig. 10.

2/Capacity obtained with manually feeding crop to the thresher by experienced operator. Results repeatable ± 4 percent with a given crop condition and 3 min. duration test.

3/Determined by rethreshing straw one time.

4/Expressed as the percentage of clean grain to the total material passing thru concave screen.

Table 2. Rice Thresher Test Results.

Configuration	Construction 1/ Feed Section	Construction 1/ Separation Section	Capacity kg/h 2/	Unthreshed Loss % 3/	Separation Loss %	Total Loss %	Purity % 4/
A-1	pegs	pegs	570	0.60	1.80	2.40	88
A-1S	pegs w/ strippers	pegs	482	0.80	0.90	1.70	89
A-2	pegs	1/2 pegs & 1/2 flaps	399	nil	0.60	0.60	84
A-2S	pegs w/ strippers	1/2 pegs & 1/2 flaps	382	nil	0.30	0.30	83
A-3	pegs	flaps	344	nil	0.60	0.60	83
A-3S	pegs w/ strippers	flaps	336	nil	0.60	0.60	85
B-4	1/2 pegs & 1/2 flaps	1/2 pegs & 1/2 flaps	375	nil	1.00	1.00	83
B-5	1/2 pegs & 1/2 flaps	flaps	382	nil	0.30	0.30	83
C-6	flaps	flaps	290	nil	0.40	0.40	83

Cylinder speed - 12.76 m/s
Variety - IR-40
M.C. - 22.5% (Ave.)
Power source - air-cooled gasoline engine rated 5 hp.

1/ See fig. 10.

2/ Capacity obtained with manually feeding crop to the thresher by experienced operator. Results repeatable ± 4 percent with a given crop condition and 3 min. duration test.

3/ Determined by rethreshing straw one time.

4/ Expressed as the percentage of clean grain to the total material passing thru concave screen.

Table 3. Results of milling with five systems.

	# 1	# 2	# 3	# 4	# 5	# 6
Variety	IR38	-	IR38	unknown	IR38	IR38
Moisture	12.5%	-	12.5%	14.0%	12.5%	12.5%
Paddy Purity	98+%	-	-	98%	98%	-
% Whole Brown Rice	-	58.6%	95.0%	-	-	95%
Blade Used	SRB	SRB	SRB	PVC	PVC	PVC
Weight of Paddy	145 kg	-	-	32 kg	45 kg	-
Weight of Brown Rice	119 kg	119 kg	73 kg	-	-	327 kg
Weight of White Rice	-	98 kg	65 kg	20 kg	28.1 kg	295 kg
Total Rice Recovery	-	67.6%	68.5%	62.5%	62.4%	69.5%
Head Rice	58.6%	40.8%	59.9%	31.2%	46.4%	60.1%
Capacity (kg/h)	840[1]	354[2]	690[2]	900[3]	900[3]	900[3]
Grain Temperature (°C)	36.1	48.9	43.3	54.4	55.6	42.7
Paddy in Rice	-	VST	-	High traces		-
Bran removed	-	17.69%*	11%	-	-	8.8%
Hull removed	18%	-	23%	-	-	23%
Hulling efficiency	86.3%	-	100%	-	-	100%

[1]Hulled grain
[2]White Rice
[3]Paddy

VST - Very slight trace
SRB - Soft Rubber Blade
PVC - Plastic Blade

#1 - Hulling performance of Chinese spiral mill:
a. grains are half-polished.
b. Hulls on brown rice are almost opened.
c. Most whole grains have broken tips.

#2 - Polishing product of #1 using standard Engleberg mill.
*This includes hulls from the product of #1.
a. White rice is undermilled and uneven milling of grain observed.

#3 - Polishing by Engleberg with brown rice hulled by IRRI rubber roll.
a. Rice is slightly undermilled.

#4 - Commercial milling. Calle Sison Rice Mill.

#5 - Continuous hulling and polishing. Paddy from IRRI. Calle Sison Rice Mill.

#6 - Polishing - Brown rice from IRRI. Polished at Calle Sison Rice Mill.

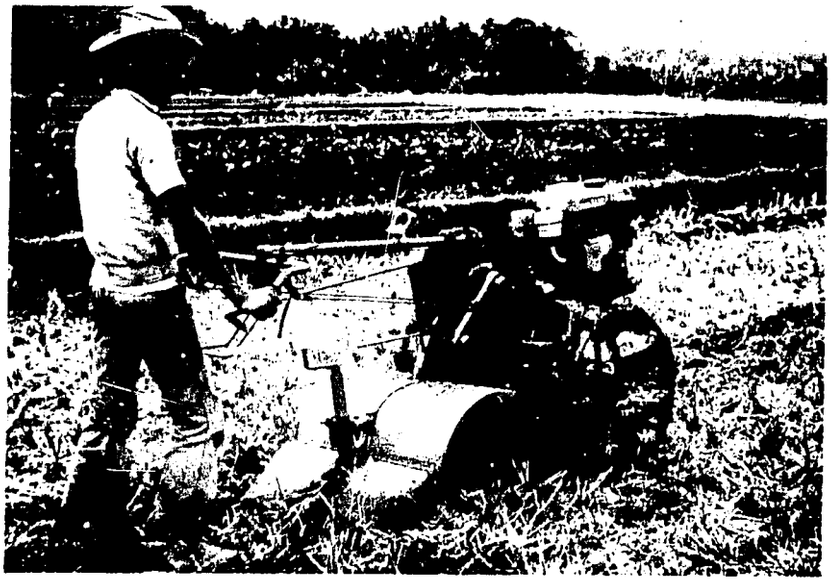

Fig. 1 Rotary tiller attachment for 6-8 hp tiller.

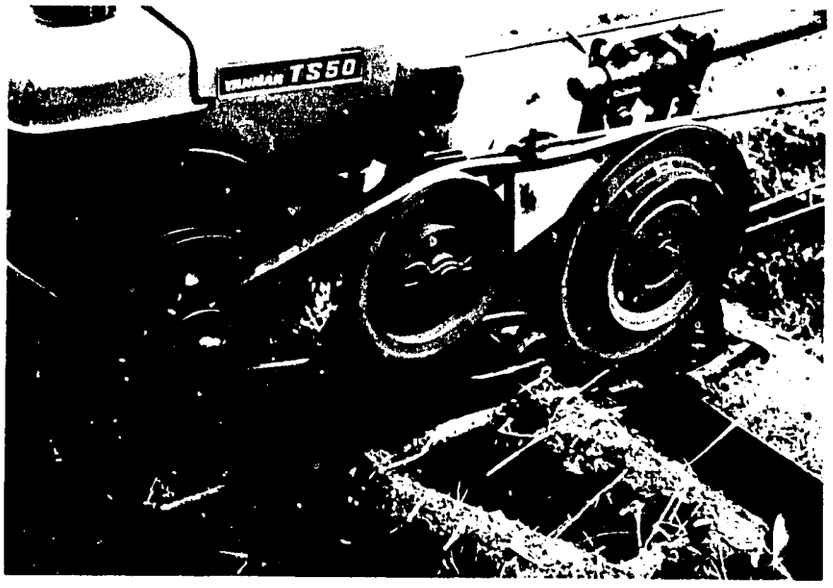

Fig. 2 4-speed tiller belt drive.

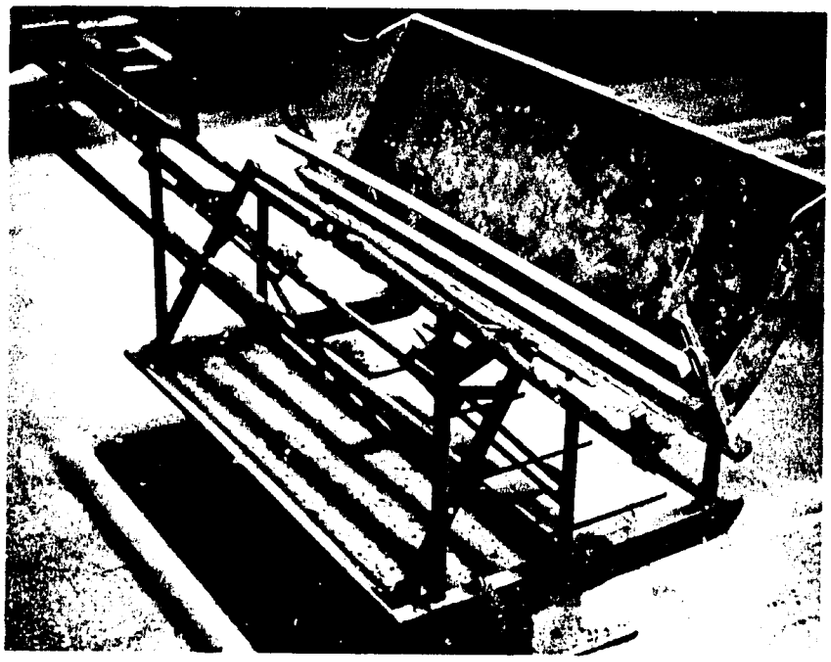

Fig. 3 Manual rice transplanter redesign.

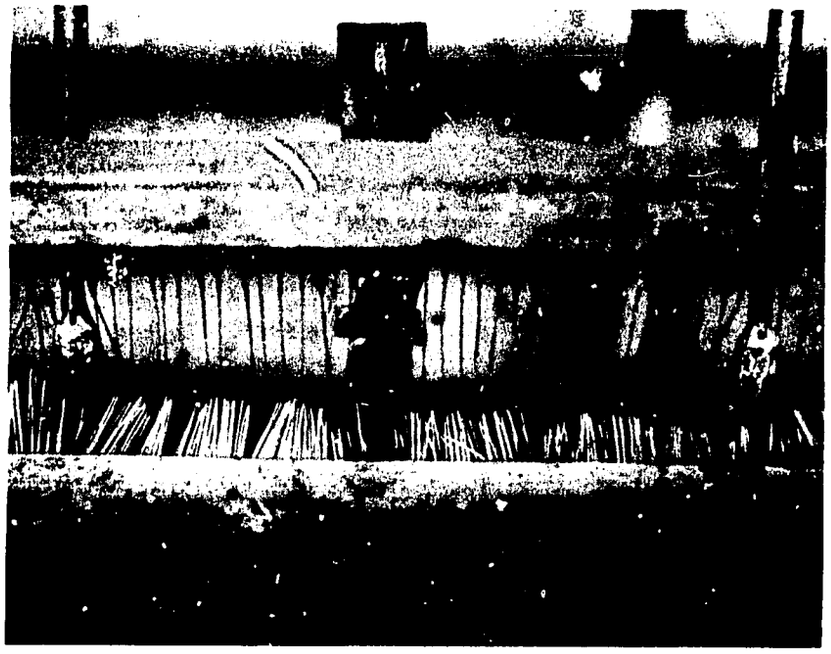

Fig. 4 3-point seedling picker.

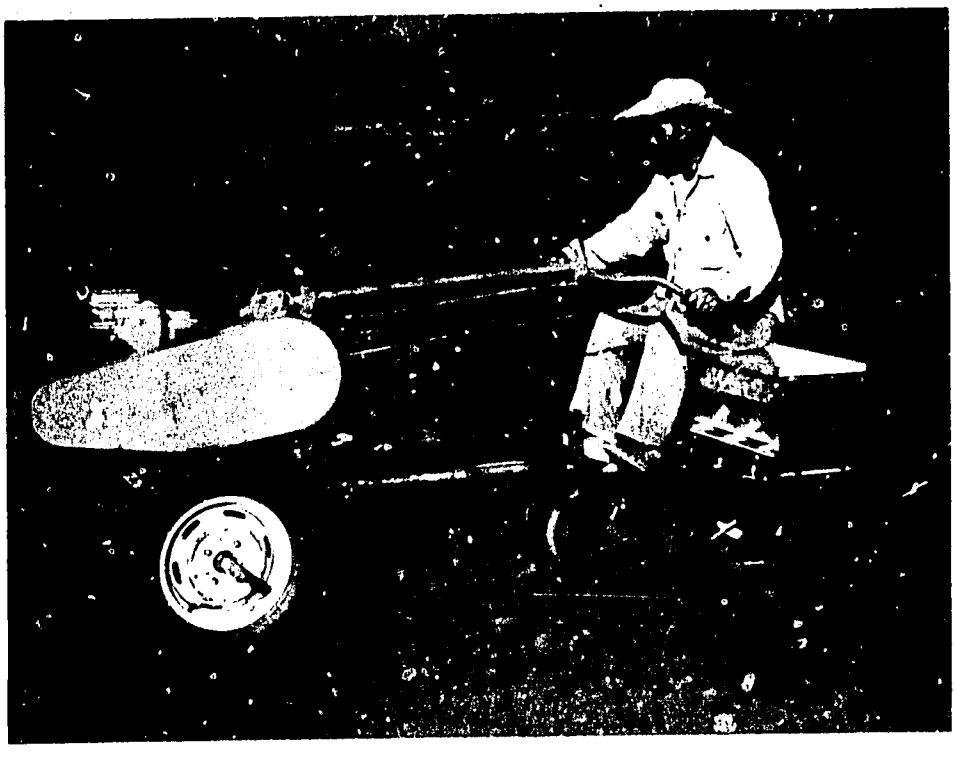

Fig. 5 Multicrop upland seeder.

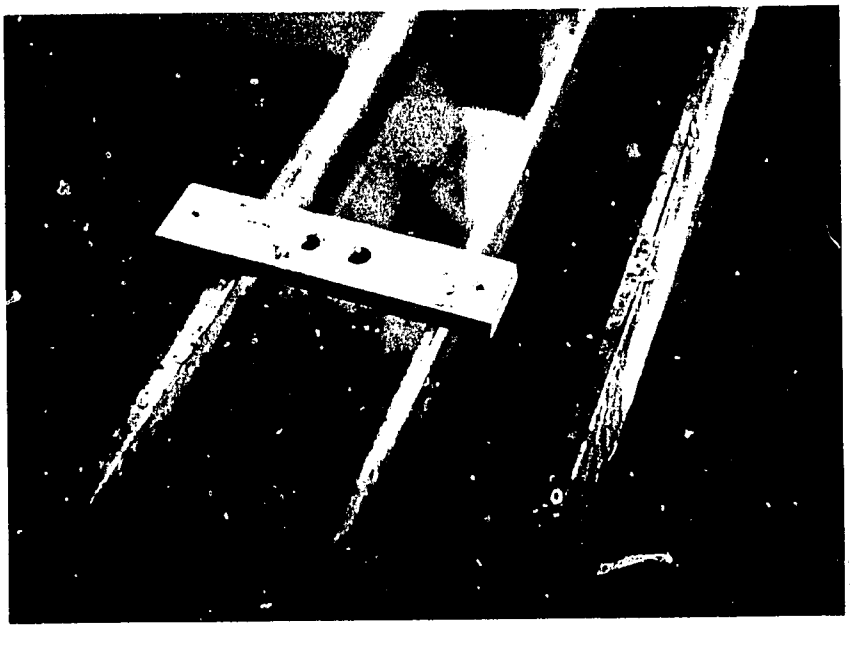

Fig. 6 Seed and fertilizer metering plate.

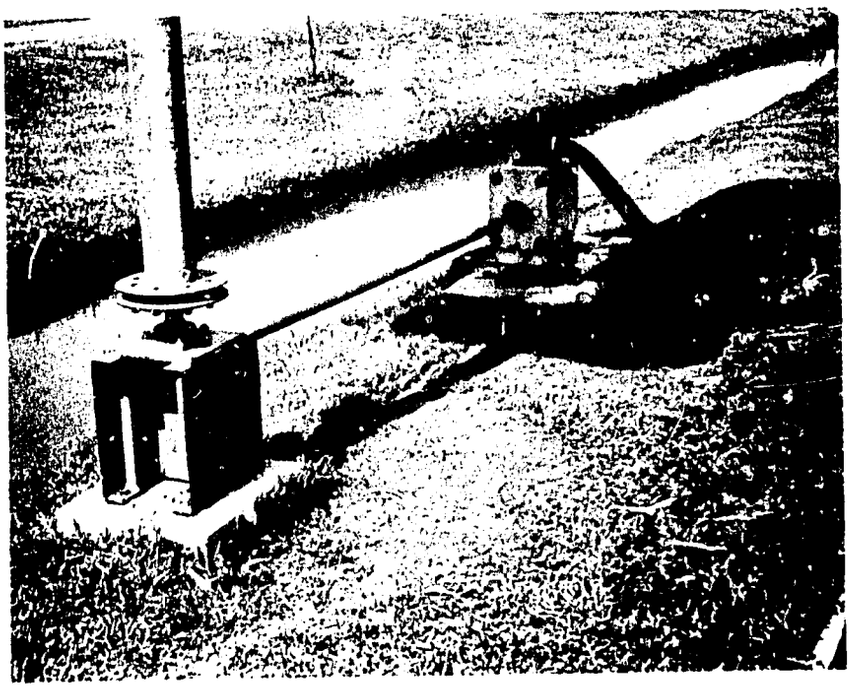

Fig. 7 Windmill-pump drive.

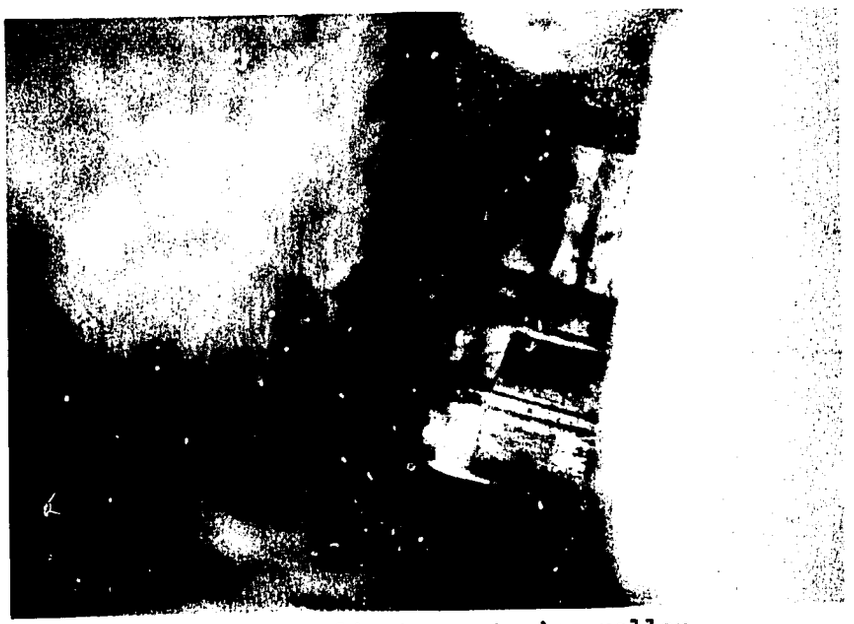

Fig. 8 Plow-sole applicator metering roller.

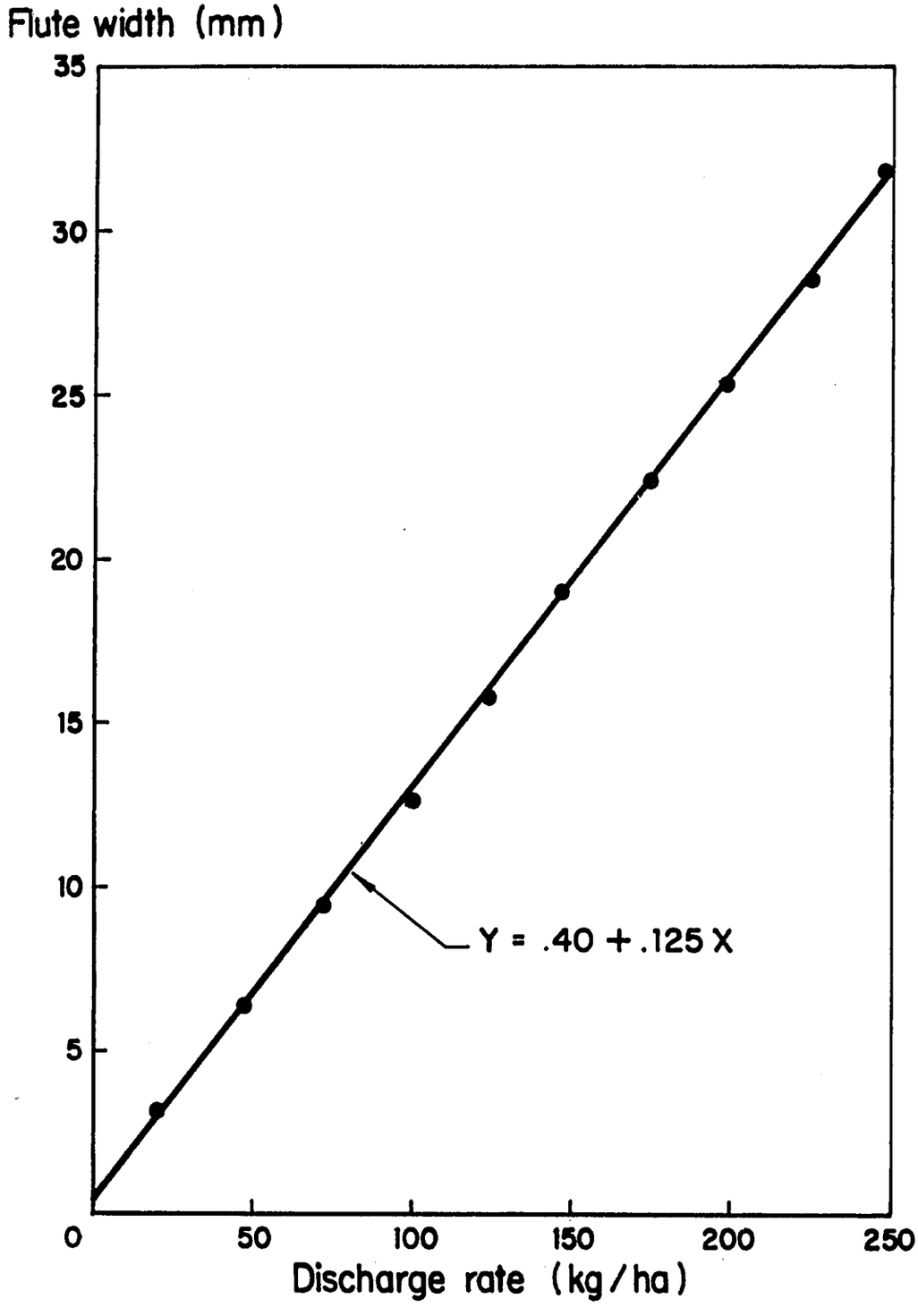

Fig. 9. Flute width vs. discharge.

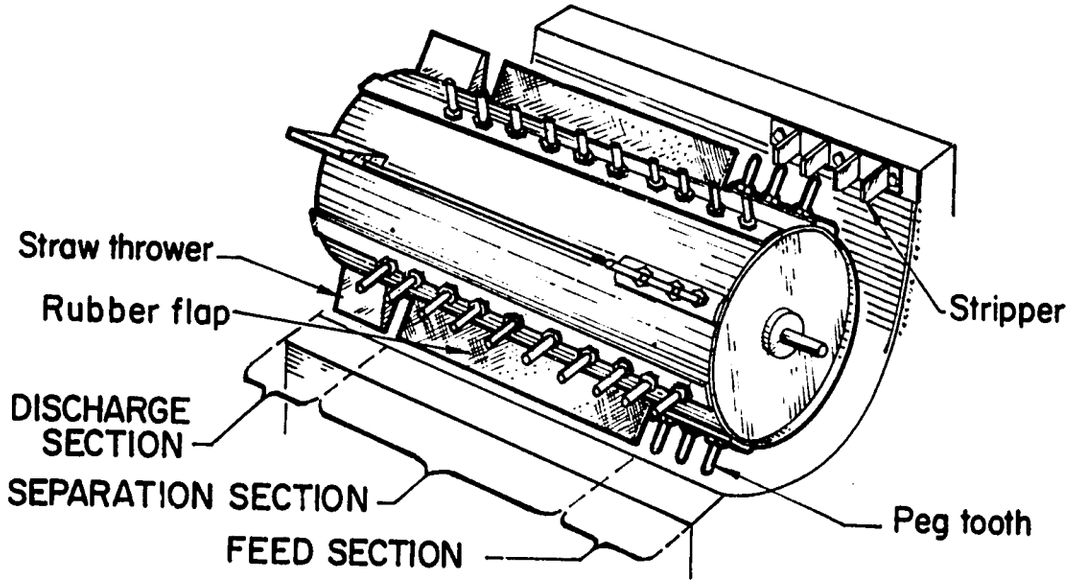

Fig. 10a. Threshing cylinder configuration A-2S.

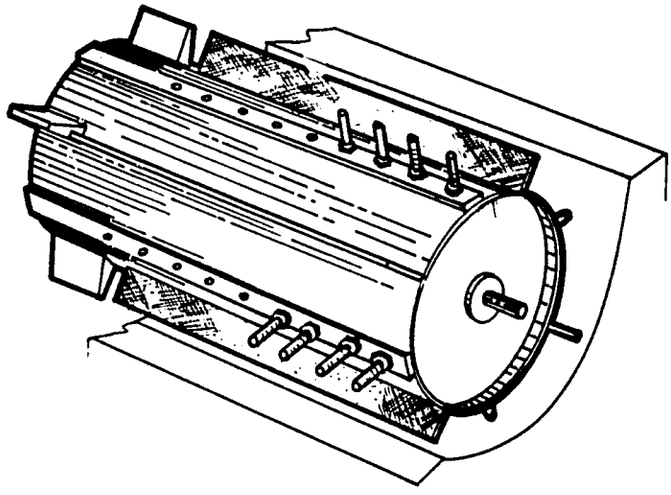

Fig. 10b. Threshing cylinder configuration B-5.

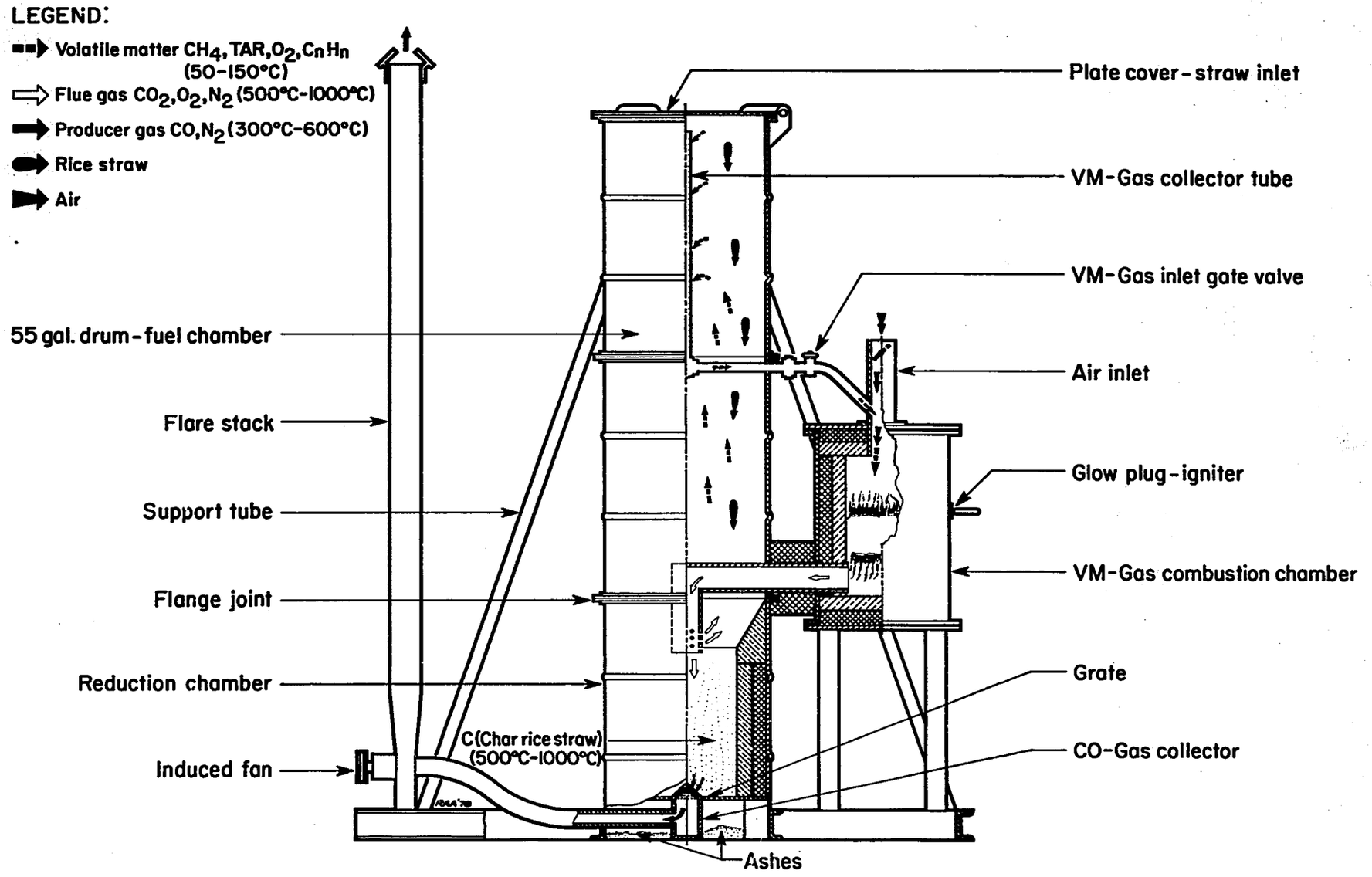

Fig. 11 Experimental gas producer generator.

MECHANIZATION RESEARCH

Compacted soil studies

The compacted soil study is in the tenth cropping season. Depths at which a cone index of 2.46 kg/cm^2 was measured increased up to 3 cm in some plots although depths at which 4.92 kg/cm^2 was encountered generally remained stable between crops eight and nine (Fig. 12). It is possible that depth stability will not occur under the continuous cropping plan when the soil remains saturated throughout the year, even in the plots tilled by the 5-7 hp tiller and water buffalo. The 4-wheel tractor plot was tilled by the 5-7 hp tiller for crop nine.

Plots were not irrigated during the 1-month fallow between the harvest of crop nine and the start of tillage for crop ten. This allowed the soil to dry somewhat. Previously the plots were kept saturated during fallow.

Cone indices of 2.46 and 4.92 kg/cm^2 were measured at sharply reduced depths compared to similar readings for crop nine. Based on these readings, a 4-wheel tractor was used to till the 4-wheel tractor plot for the first time since crop six. Only minor mobility problems were encountered. An attempt will be made to determine the effects on soil depths of a 1-month dry period after each crop.

Transplanter field trials

Transplanting rice in standing water is still practiced in most rice growing regions of the world. It is one of the most labor intensive operations in rice production and generally requires large amounts of labor for short periods. Approximately 30% of the total labor required for rice production goes into transplanting.

Three transplanting systems are presently available to the farmer: powered machine, manual machine, and conventional hand transplanting. A field experiment was conducted to study the comparative performance and economics of the three systems. A 2-row Japanese power transplanter (Fig. 13), Philippine-made 5-row manual transplanter (Fig. 14), and hand transplanting were compared. Seedlings suitable to each system were prepared and all intermediate steps were performed and analyzed. The power transplanter used 16-day-old, mat-type seedlings that were grown in special nursery boxes furnished with the machine. Wet-bed seedlings, 28 days old, were used with the manual machine and 12-day-old, dry-bed seedlings were hand transplanted. The seedlings were transplanted under the same field conditions on the IRRI Experimental Farm using two replications for each system. After transplanting, standardized field management methods were used for each plot. Crop cuts were taken from each plot before harvest to estimate yield.

The highest yield was obtained from the conventional hand transplanting system (4050 kg/ha), the lowest from power machine transplanting (3266 kg/ha). The manual transplanter plot yielded 3796 kg/ha. Yield differences among the three transplanting systems were not significant at the 1% level, but differences between hand and machine transplanting methods were significant at the 5% level using a t-test.

Total labor requirements to transplant 1 ha from seedling preparation to transplanting were 56 manhours with the power machine system, 95.7 with the manual machine system, and 143.2 for the conventional hand system. Seedling preparation consumed 36 and 46 manhours/ha for the power and manual transplanters, respectively, but only 23 manhours/ha for hand transplanting. Thus, reduction of time required for seedling preparation is important to reduce total costs of the machine transplanting systems.

Machine costs were divided into fixed and variable components. Annual fixed costs included depreciation, interest, and repairs. Variable costs included fuel, lubrication, and labor plus seedling preparation costs. At present Philippine wage levels, the manual transplanter's breakeven point is 15.8 ha transplanted annually; for the power transplanter it is 32.3 ha. The relationships between total average costs and annual transplanting area for each transplanting system at different wage rates are shown in Figure 15. Small increases in local labor rates can produce a marked reduction in the transplanting area breakeven points.

Shortages in labor during transplanting are generally reflected in increased seasonal wage rates, thus additional development is required to lower the cost of transplanting equipment to make the machines more attractive in countries suffering seasonal labor problems during critical planting periods. More detailed information is available in a paper "Field Tests on Three Transplanting Systems", which is available upon request.

Product development tests

Field endurance testing of the portable thresher continued and one thresher has now logged over 800 hours. Two other machines have operated 700 and 420 hours, respectively. Testing will continue until at least one machine has operated for 1000 hours.

Field testing of the 6-8 hp tiller has progressed to where two units have operated for over 500 hours each, with one unit having logged 700 hours. The unit built from production drawings has operated for 475 hours at which time an intermediate shaft bearing in the transmission failed from what appeared to be a lack of lubrication. Although this had not been a problem during previous tests, sealed bearings are being specified for the intermediate and top shafts to eliminate the possibility of

early failure. Methods to provide improved lubrication to the upper bearings are being investigated. This unit will continue operation until it has logged 1000 hours.

Operating and repair costs are collected during the endurance tests and will be used in determining total costs of ownership. Information on machine operations, adjustment, maintenance, and servicing acquired during testing is included in the operator's manuals. Manuals on the portable thresher and 6-8 hp tiller were published and made available to cooperating manufacturers in 1977.

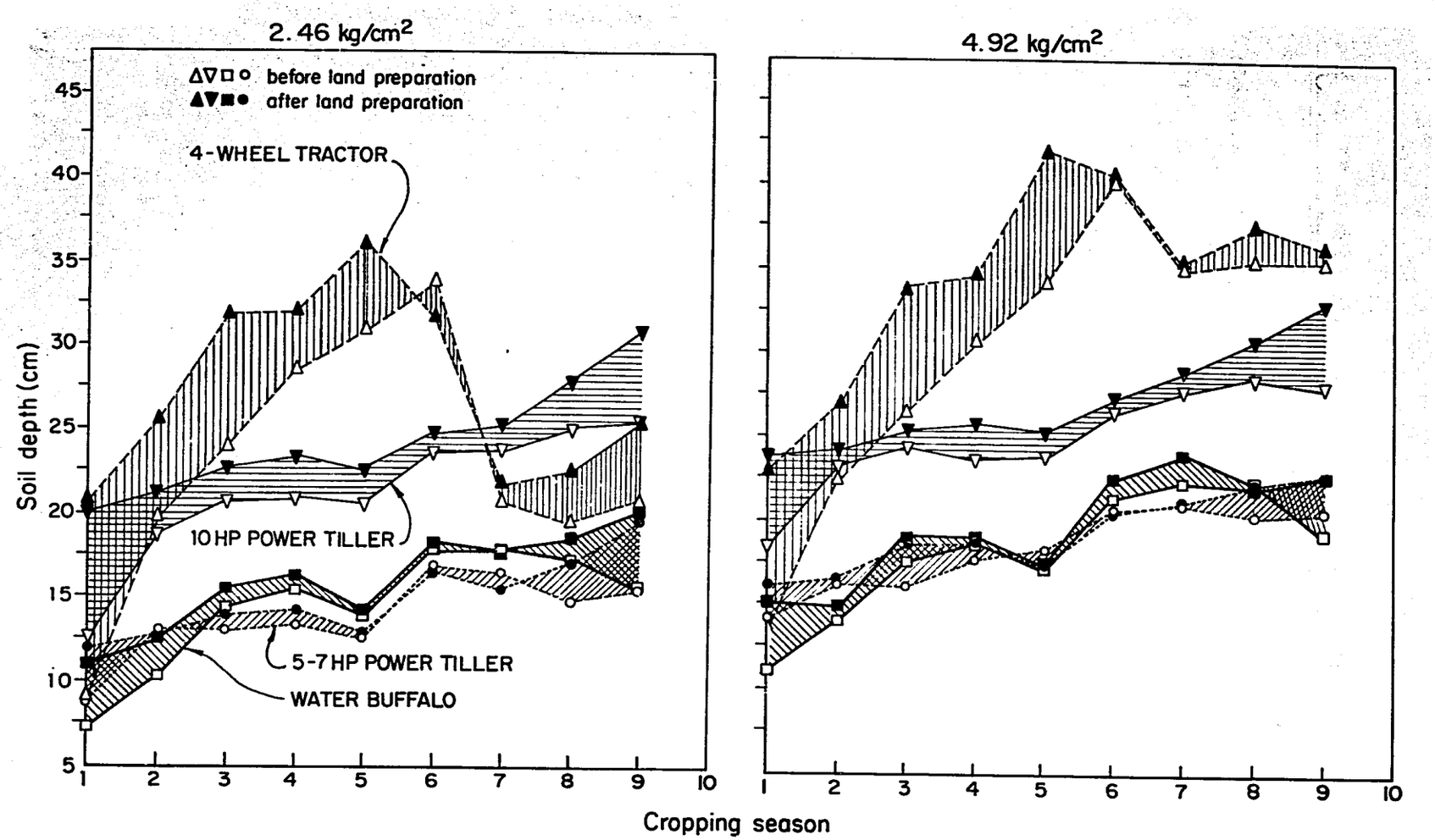

Fig. 12 Compacted layer depth under different tillage systems.

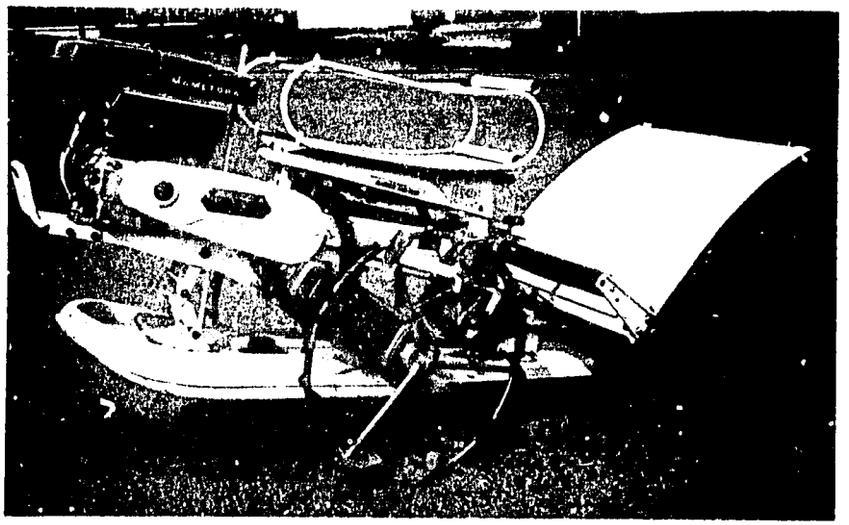

Fig. 13 Power transplanter.

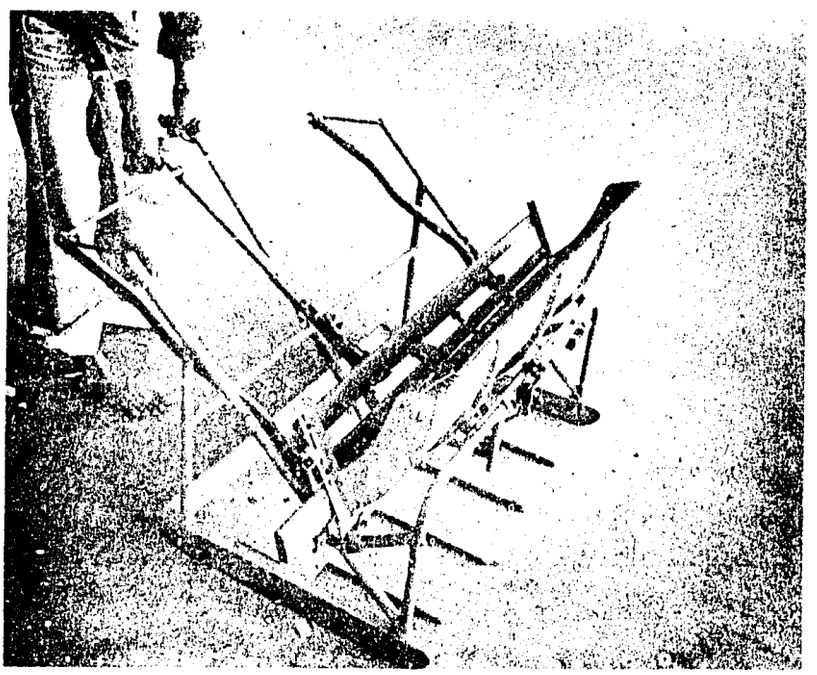

Fig. 14 Manual transplanter.

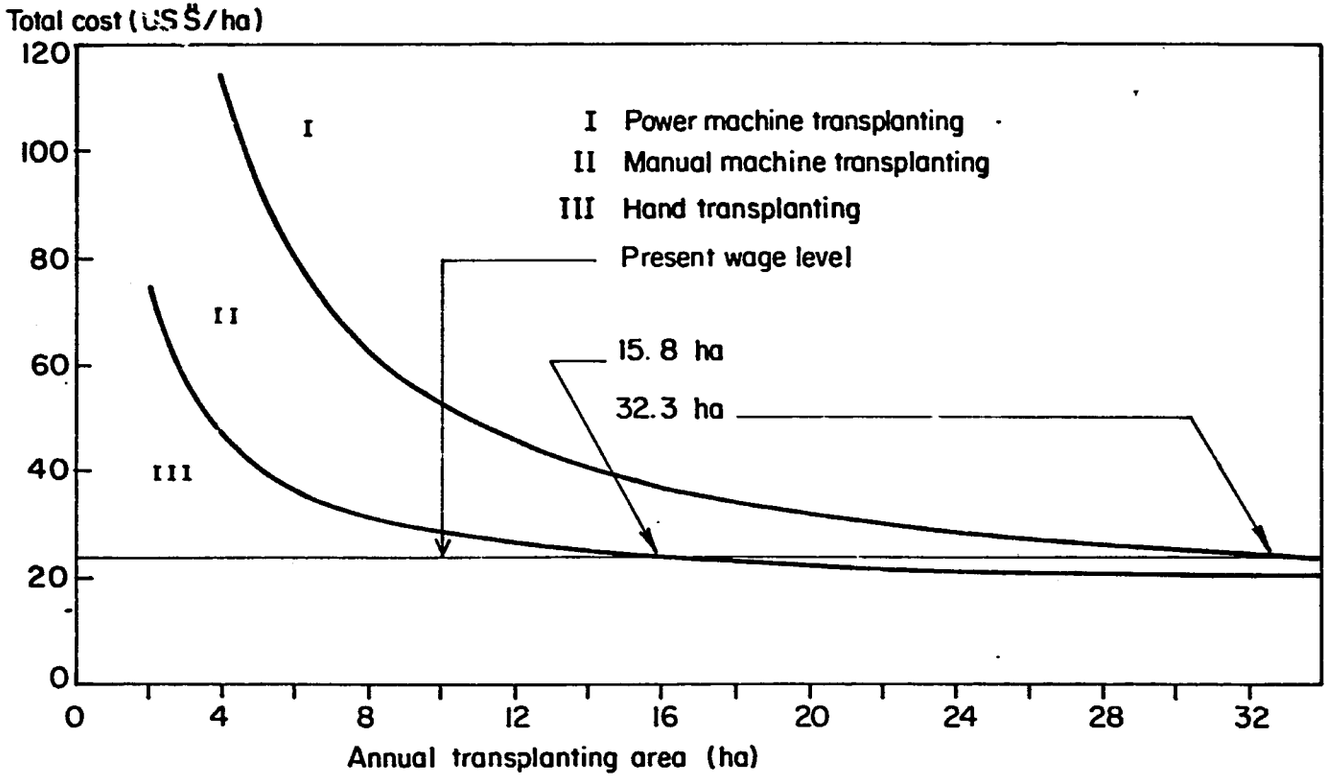

Fig.15 Relationship between total cost and annual use.

MECHANIZATION SYSTEMS

IRRI UPLB-BRBDP rice post-production technology project

Semiannual Report No. 24 covered the implementation aspects of this project in the Bicol River Basin of the Philippines. During this reporting period, farm surveys at two sites were completed as well as interviews with the farmer-cooperators involved in the technical evaluation trials.

Farm level systems

Field trials took place during the 1976 wet and 1977 dry seasons. Details on plot location and size and varieties planted are shown in Table 4.

Table 5 shows the improved system had the lowest labor requirement and the traditional system had the highest. Mechanized threshing and drying reduced the overall labor requirements and operational time which permitted control over the final product and reduced pilferage losses. These systems also facilitated easier handling of non-shattering varieties at high moisture contents which are problems for farmers using manual techniques.

The level of harvesting and threshing losses are shown in Table 6. Systems III and IV incurred the highest harvest losses. The number of handling steps required to harvest and thresh mechanically included gathering and hauling of paddy to a central threshing area. Where paddy is threshed manually, it is threshed in the plot itself. Around 50% of the respondents indicated paddy passes through three or more handling processes before threshing.

The results shown in Table 7 indicate the improved systems produce slightly higher milling recoveries than the traditional systems. Systems with combinations of traditional and mechanical techniques also show higher recoveries. A similar trend for head rice recovery was also noted. Broken and cracked kernels decreased as the improved technique was introduced.

Post-production practices among farmers in the three pilot areas showed little variability in attitudes and preferences regarding post-production technologies and problems. Table 8 summarizes the characteristics of these farmers. Sixty-three percent of the farmers interviewed sell their paddy immediately after threshing while 29% do not. Eight percent sell depending on the prevailing market situation.

Mill level systems

The preliminary results of a technical assessment study, commercial milling of paddy samples from the farm level systems, and preliminary findings on mill monitoring became available during the reporting period.

Village-type rice mills (see Table 9) that used rubber-roll-type hullers are significantly superior over steel huller mills. Although some steel hullers compare with rubber-roll mills in total recovery, head rice recoveries are significantly lower.

No significant differences were noted among commercial mills (Table 9). Cone-type mills can maintain a hulling efficiency comparable to that of the rubber-roll hullers.

The technical assessment study also showed that a steel huller coupled to a rubber-roll huller gave increased total milled and head rice recoveries. The steel huller mill serves as a friction whitener similar to the Japanese single-pass rice mills with higher milled rice and head rice recoveries.

The results of milling tests employing existing systems from alternative farm level threshing-drying systems are summarized in Table 10. The results indicate better quality and higher milling yields from improved field level threshing and drying technologies. This is particularly evident when using commercial level milling systems and less pronounced with the steel huller mills.

The monitoring schedule provided a technical evaluation of mills using paddy samples at field conditions. Table 11 compares potential milling and head rice recoveries to observed milling and head rice recoveries. The cone-type and the rubber-roll mills were the most efficient.

A cost, revenue, and profit analysis for alternative milling systems is summarized in Table 12. The analysis employs the following assumptions:

1. Paddy is bought, milled and sold at prevailing prices

2. The milled rice recovery rates used resulted from the earlier technical assessment study

3. Operating costs were derived from survey results

4. Sale of by-products was not considered

In this preliminary analysis the rubber-roll steel huller combination, rubber-roll single pass, and the centrifugal huller mill have the highest profit per ton at US$33.49, 35.14 and 37.24, respectively,

when operated at a 25% utilization rate. Although rubber roll huller mills have higher operating costs, the difference in recovery rates dictates the difference in profit per unit output.

Household and village storage studies

A limited study was initiated to develop a general view of problems associated with small-scale storage of paddy in the tropics, to assess inherent varietal characteristics relating to storability, and to contribute to the design of improved farm and village storage facilities and systems.

A field survey was conducted in Northern, Southern, Eastern, Western, and Central Luzon, Philippines, in December 1977. Farm size ranged from 1 to 8 ha. The storage facilities and systems utilized by farmers vary widely from village to village and from farm to farm -- depending on climatic, techno-economic conditions and the nature of the farm. Figure 16 summarizes farm storage practices observed during the survey.

Storage capacities varied from about 0.1 to 45 m^3. Preliminary results showed that most of the farm storage methods have only small effect on heat and moisture isolation. The moisture content of stored grain is almost totally dependent on the climate and ranged from 11 to 17.5% in the paddy observed. Most of stored grain was modern varieties, either IR and C-4 types. Many farmers, however, store a small quantity of traditional varieties, such as Elon-Elon and Wagwag, for special occasions. Farmers seemed fully aware of the shortcomings of existing storage techniques and a majority of those interviewed exhibited a willingness to improve their storage facilities. Most farmers do not inspect paddy while in storage and assume it is always dry. From this preliminary survey, it is evident that farmers can improve their storage and reduce storage losses.

To determine the effects of the different storage facilities on grain deterioration and loss, paddy samples were taken at each farm household and are being analyzed for physical properties, milling recovery, discoloration, insects, and fungi infestation. The survey results and the technical data obtained in the laboratory will be studied further to determine the scope for developing design criteria for improved farm and village storage facilities and systems.

Power tiller Survey

A survey of 122 power tiller owners and nonowners was conducted in Laguna and Nueva Ecija Provinces of the Philippines during the last half of 1976. Tiller owners were classified as old and new owners to determine changes in ownership and use patterns over time. Nonowners provided a comparison with owners to assess factors influencing decisions

to purchase tillers. The objectives of the study were: 1) to evaluate tiller utilization; 2) to determine the impact of tiller ownership on prestige, income, yields, cropping patterns and intensity, and effective use of other resources; 3) to assess the nature of problems related to service, performance, and credit; 4) to evaluate future preferences in performance and features; and 5) to examine potential demand for other farm machines.

A preliminary report from the survey was included in Semiannual Report No. 23. A majority of tiller owners and nonowners were members of local village associations, were lessees, have gravity-irrigated farms, and generally plant two crops per year. Average farm size for owners was 4 ha and 2 ha for nonowners.

Imported brands are widely used in Laguna while a mixture of both local and imported brands are found in Nueva Ecija. Owners whose tillers were 8 to 15 years old at the time of the interviews indicated they expected them to operate for a few more years. With several major and minor repairs of the transmission and engine, the average life of local tillers was estimated at 8 years and for imported tillers, 16 years. About 90% of the tillers were bought new. Most tillers were bought from dealers and more than 75% were purchased on an installment basis.

Tiller and buffalo utilization

Tillers and buffalo were used on both the owner's farm and for custom work, transport, and other outside activities. Two operators commonly operate each tiller, usually the sons of the farmer or a combination of the farmer and his son, although there are a significant number of farmers hiring operators who are non-relatives. The farmer-owner usually operates the water buffalo. Operators were paid about US$1.50 per day with meals.

Tiller owners usually hire buffaloes for tillage near levees because the machines cannot reach the edges and corners of the paddies. Conversely, buffalo owners hire tillers for either plowing or harrowing to ensure faster and better quality land preparation, a shorter intercropping interval or for use in deep fields. Tillers are used to overcome the major shortcomings of buffaloes for land preparation.

Thirty-seven percent of the tiller owners on both provinces do custom work. The extra income is used to meet installment payments of the machine, pay educational expenses, and to acquire additional property. Those not engaged in custom work indicated concern for the life of the machine and lack of demand as reasons for not hiring out their machines. Custom work is usually done within 1 to 5 km of the home. Buffalo owners also perform custom work to earn extra income. Peak months for custom work in the wet season is May and June in Laguna and June and July in Nueva Ecija. During the dry season, November and December are busy months in both provinces. Buffaloes are used as substitutes for tillers in case of breakdown or when there is no cash to buy fuel.

Welfare effects of tiller ownership

Some farmers felt tiller ownership had increased their prestige while others said it did not because of the presence of many tillers in the area. A majority felt there was little or no increase in income because of a lack of custom work, the high incidence of rice pests and diseases, and the high costs of machine repair and maintenance. Those experiencing an income increase attributed it to custom work, increased yields and lower production expenses, faster land preparation which enabled them to accept other farm and non-farm jobs to earn extra income.

Some farmers reported no increase in yield. Those indicating increased yield attributed it to faster and better land preparation with the tiller. No change in cropping patterns and intensity resulted from acquiring a tiller, probably because many farmers hired a tiller before acquiring their own machines and had been growing two crops per year before acquisition.

Problems in the use of tillers

Major problems encountered in the use of tillers are insufficient power and speed, poor durability, difficult to operate, repair and maintain, and poor quality. Farmers complained that many parts required frequent replacement (usually transmission bearings, belt, engine piston rings, and sparkplugs). Major breakdowns were most frequently encountered by owners of old imported tillers and by owners of both old and new locally made tillers. Owners of locally-built tillers indicated that major breakdowns occurred approximately 1.4 years after purchase while owners of imported tillers reported about 5.3 years of service before major repairs were needed. The cost of repairs and maintenance for imported machines appeared to be higher than for local tillers, largely as a result of expensive imported spare parts.

Steering and mobility problems were cited most frequently by local tiller owners who complained of a lack of steering clutches. Unavailable spare parts was frequently mentioned by owners of imported brands. Repair parts are often bought at the nearest hardware or auto supply store rather than from the tiller dealer. Farmers reasoned that most breakdowns and parts requirements are minor and parts from dealers are often expensive.

Desired machines and features

Both old and new owners and nonowners tend to agree on desired tiller features. Power and productivity, durability, good field performance, and ease of operation are the "most wanted" features. They indicated a desire to acquire farm machines with the power tiller ranking first followed by a thresher. Many indicated a desire to acquire non-farm machines such as passenger vehicles and motorcycles. Lack of capital is the main constraint to buying additional machines. Most

farmers could not obtain loans because of outstanding loans, strict lending requirements, low incomes, uncertainty of harvest, and risk of failure to pay. Most do not like cooperative machine ownership because of trouble with payments, scheduling of use, and difficulty in repair and maintenance. A paper dealing with this subject is available upon request.

Table 4. Characteristics of three villages included in the post-production pilot trials, Bicol River Basin area, Philippines, 1976-77

Location	Season	No. of cooperators	No. of plots	Ave. plot area sq m	Ave. yield[a/] t/ha	Variety planted
Libon, Albay	Wet	3	25	1209.197	2.07	C4
	Dry	5	32	1739.392	3.33	C4, IR-26 Peta
San Jose, C.S.	Dry	5	55	1037.914	4.28	C4, IR-20 IR-26 IR-30
Buhi, C.S.	Dry	4	39	1017.041	4.18	C4, IR-26
Total/Ave		17	151	1250.884	3.46	1) C4 2) Peta 3) IR-20 4) IR-26 5) IR-30

[a/] Final paddy weight (kg) after drying to 14% m.c. and adjusting for purity.

Table 5. Comparative labor requirements for alternative rice post-production systems, Bicol River Basin Area, 1976-77.

Operation	Systems[a/] I	II	III	IV
	mean values (m-h/ha)			
Harvesting	137	139	167	152
Threshing	168	166	52	59
Drying	30	15	72	15
Total -	335 (29)[b/]	320 (27)[b/]	291 (25)[b/]	226 (19)[b/]

[a/] System I - involves traditional threshing and traditional drying (sun)
II - involves traditional threshing and mechanical drying
III - involves mechanical threshing and sun drying
IV - involves mechanical threshing and mechanical drying

[b/] Figures in parenthesis are in percent.

Table 6. Grain loss in harvesting and threshing operations, Bicol River Basin area, 1976-77.

System[a]	Harvesting	Threshing	Total
		percent	
I	.19	1.64	1.83
II	.27	1.03	1.30
III	.47	0.97	1.44
IV	.43	1.69	2.12

[a]See footnote - Table 5 for description of systems.

Table 7. Comparative recovery rates for alternative post-production systems, Bicol River Basin Area, 1976-77.

Item	Systems[a]			
	I	II	III	IV
		percent		
Brown rice	74.6	74.6	75.08	75.05
Milled rice	67.70	67.72	67.99	68.34
Head rice	76.50	77.94	78.26	78.55
Broken	21.69	20.34	19.89	19.40

[a]See footnote - Table 5 for description of systems.

Table 8. Basic information on the 137 farmers of the Bicol River Basin Area, 1976-77.

	Libon	San Jose	Buhi	All
No. of respondents	40	27	70	137
A. The Farmer				
Ave. age of farmers	50	51	47	49
Ave. yrs. of education	7	5	5	6
Tenure status: (%)		% values		
a) Lease tenants	65	85	33	53
b) Owner-cultivator	15	-	29	19
c) Share-tenants	12	4	23	16
d) Lease tenants-owners	5	7	6	6
e) Owner-share tenants	-	-	6	3
f) Share tenant-lease tenants	-	-	4	2
g) Amortizing owner	2	4	-	2
B. The Farm		mean values		
Total farm area (ave.)	2.745	1.848	1.023	1.694
Area devoted to rice (ave.)	2.207	1.839	0.841	1.441
% rice area of total area	91.07	99.66	88.82	93.18
Source of water		% values		
a) gravity	85	100	74	82
b) rainfed	15	-	10	10
c) gravity & rainfed	-		16	8
Type of rice mill commonly used:		% values		
a) Engleberg	92	85	93	91
b) disc cone	8	4	6	6
c) trav. mills	-	7	1	2
d) disc cone & Engleberg	-	4	-	2

Table 9. Total milled and head rice recovery and hulling efficiency for nine milling systems, wet and dry seasons, Bicol River Basin, 1976-77.

	Milling Recovery	Head Rice	Hulling Efficiency
		percent	
1. Rubber roll single pass	70.31[ab]	62.51[bc]	82.49[a]
2. Rubber roll multipass	68.98[bc]	77.09[a]	71.92[bc]
3. Rubber roll-steel huller combination	69.24[bc]	71.25[ab]	80.13[ab]
4. Cone type rice mill (ave.)	(69.00)	(75.76)	(64.45)
a. Concina RM	71.53[a]	75.55[a]	62.01[c]
b. Gonzales RM	67.60[cde]	75.19[a]	64.01[c]
c. Libmanan RM	70.63[ab]	76.75[a]	62.23[c]
d. Nazarrea RM	66.25[efg]	75.55[a]	70.04[c]
5. Steel huller rice mill (ave.)	(66.23)	(41.70)	N.A.
a. Dycoco RM	65.45[fg]	42.14[f]	
b. Olaño RM	67.62[cde]	48.07[def]	
c. Ruta RM	63.13[h]	31.96[g]	
d. Torres RM	68.74[bcd]	44.66[ef]	
6. Stone disc-steel huller combination	66.99[def]	55.40[cd]	46.38[d]
7. Multiple steel huller mill	68.15[cde]	51.45[def]	N.A.
8. IRRI experimental single pass steel huller mill	64.76[gh]	54.45[cde]	N.A.
9. Centrifugal huller mill	70.33[ab]	73.76[a]	70.23[c]

Note: Using the Duncan's Multiple Range Test, at 5% level of significance, treatment means with at least one common letter are not significantly different from each other.

Table 10. Total milled and head rice recovery of cono and steel mills as affected by alternate methods of handling, threshing and drying in three pilot areas, Bicol River Basin, 1976-77.

System[a]	Milling Recovery							
	Cono				Steel Huller			
	San Jose	Buhi	Libon	All Areas	San Jose	Buhi	Libon	All Areas
	PERCENT							
I	68.39	65.73	64.77	66.30	64.14	62.67	57.67	61.50
IV	69.34	66.11	65.53	66.99	63.46	60.09	58.55	60.70
Difference	.95	.38	.26	.69	.68	2.58	.88	.80
Average (by areas)	68.87	65.92	66.15	66.65	63.8	61.38	58.11	61.1
	Head Rice Recovery							
	PERCENT							
I	85.19	71.69	71.92	76.27	37.75	34.49	26.99	33.08
IV	86.49	78.88	79.13	81.5	40.85	34.68	47.44	40.99
Difference	1.30	7.19	7.21	5.23	3.1	.19	20.45	7.91
Average (by areas)	85.84	75.29	75.53	78.89	39.3	34.59	37.22	37.04

a/ I - Traditional method of handling, threshing and drying.

IV - Improved method by use of the mechanical thresher and dryer.

Table 11. Comparative milling performance of mills included in monitoring schedule, Bicol River Basin, 1976-77.

Milling system	Commercial Milling		Laboratory Milling[c]		Difference Between Commercial & Laboratory Milling	
	Milled Rice[a]	Head Rice[b]	Milled Rice	Head Rice	Milled Rice	Head Rice
	percent					
1. Cone-type mill	65.22	77.35	67.12	79.77	1.90	2.42
2. Steel huller	62.70	50.97	68.86	73.93	6.16	22.96
3. Rubber-roll-single pass	67.0	67.63	71.53	81.82	3.73	14.19
4. Rubber-roll-steel huller combination	67.49	64.17	69.51	74.73	2.02	10.56
5. Disc-huller combination	63.68	d/	d/	d/		

a/Based on daily records.

b/Based on analysis of samples collected from mill output.

c/Milling potential from paddy samples.

d/No samples collected.

Table 12. Cost, revenue and profit per ton for alternative milling system at 25% utilization rate, Bicol River Basin, 1976-77.

Milling system	Paddy			Total Cost per ton	Milling Recovery	Milled Rice			Revenue per ton paddy	Profit per ton
	Monthly Input[a]	Price per ton[b]	Operating cost/ton[c]			Monthly Output	Price per ton[d]	Total sale per month		
	(tons)	($)	($)	($)	%	(tons)	($)	($)	($)	($)
Cone type mill	125.65	148.6	7.46	156.11	69.00	87.60	270.27	23432.00	186.49	30.38
Steel huller mill	32.36	148.6	2.81	151.46	66.23	21.43	270.27	5792.43	179.00	27.54
Rubber roll single pass	18.35	148.6	6.24	154.89	70.31	12.90	270.27	3487.00	190.03	35.14
Rubber roll-steel huller combination	56.25	148.6	4.99	153.64	69.24	38.95	270.27	10526.35	187.13	33.49
Stone disc-steel huller combination	41.22	148.6	3.59	152.24	66.90	27.58	270.27	7452.97	180.81	28.57
Multiple steel huller mill	40.02	148.6	4.14	152.79	68.15	27.27	270.27	7371.22	184.19	31.39
Centrifugal huller mill	40.08	148.6	4.36	153.01	70.39	28.21	270.27	7625.00	190.24	37.24

[a] Actual input observed from monitoring activities.

[b] Price per kg of paddy is set at $0.1486.

[c] Operating cost per ton is set at 25% utilization level.

[d] Price per kg of milled rice is set at $0.2702.

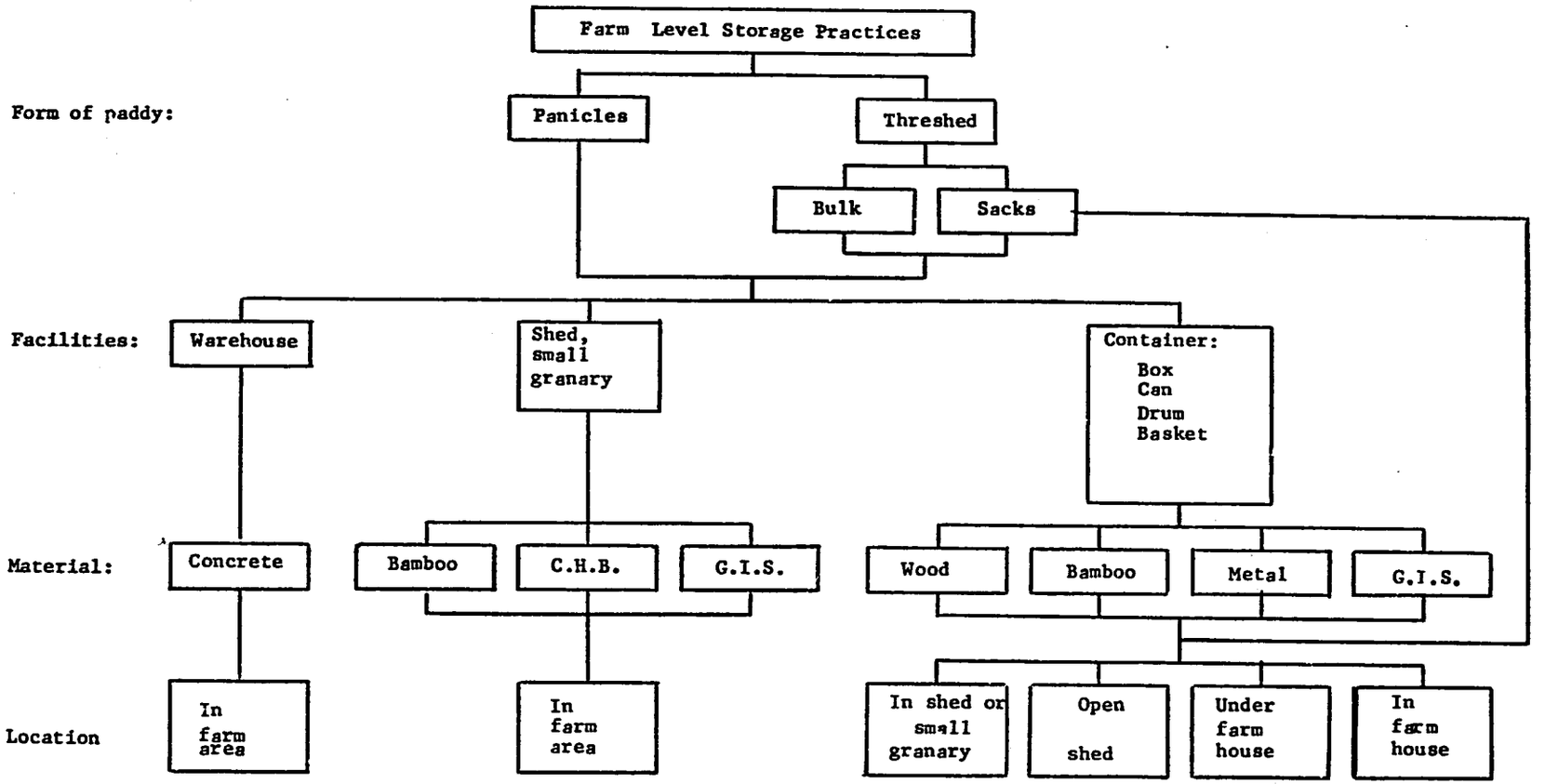

Fig. 16. Farm and Household Storage Systems in Central and Northern Luzon, Philippines, 1977-78.

INDUSTRIAL EXTENSION

Introduction

USAID sponsored an International Machinery Workshop at IRRI in November to assemble the network cooperators and others associated with the IRRI Machinery Development and Industrial Extension Program. Participants from 17 countries in Asia, Africa, and the Americas discussed the effective use of IRRI designs, shared experiences of formulating and implementing agricultural mechanization programs in their countries, and presented papers on the status of mechanication in the countries they represented. The proceedings of the workshop will be published in early 1978.

The project staffs in Pakistan and Thailand, working in cooperation with local manufacturers, have developed modifications for the IRRI axial-flow thresher that improve its performance in local rice varieties and crops grown in rotation with rice. Farmer and manufacturer interest in the thresher is evidenced by a 2.5 times increase in the number of machines produced in 1977 compared to 1976 (Fig. 17). 1977 production of machines based on IRRI designs is given in Table 13.

The portable thresher described in previous reports was introduced in the Philippines. Acceptance was good and 812 machines were produced by 12 manufacturers. The sorghum threshing modification described in the Design and Development section was incorporated in about 100 of these machines.

Prototypes of the 6-8 hp tiller with steering clutches have been built by manufacturers in Pakistan, the Philippines, and Thailand, but Indian firms have shown the highest interest in this new design. The IRRI 5-7 hp tiller was not considered suitable for conditions in India, but interest generated by the new design resulted in four companies building prototypes for testing. One of these firms has completed the evaluation phase and has begun marketing.

International agricultural machinery workshop

With funds provided by USAID an International Agricultural Machinery Workshop was held in Los Baños on November 2-5, 1977 to assemble cooperators and manufacturers associated with the IRRI Machinery Development and Industrial Liaison programs to discuss problems related to the effective and efficient use of IRRI designs and to evaluate and contrast the comparative experience of countries involved in formulating and implementing programs and policies of mechanized agriculture. Workshop participants came from Bangladesh, Burma, Brazil, Colombia, Egypt, India, Indonesia, Japan, Korea, Malaysia, Nepal, Pakistan, the Philippines, Sri Lanka, Taiwan, Thai-

land, and the U.S.A. Papers describing the current status of mechanization in each country represented were presented along with statistical information which is being compiled to formulate a statistical summary and narrative report for the workshop. This will be combined with the country reports and published as a proceedings of the workshop in early 1978.

The workshop program included a formal discussion of issues confronting the IRRI program, presentations outlining changes in agricultural mechanization which have occurred in selected countries over the past two decades, and a working display and demonstration of equipment designs currently under development at IRRI.

Proposed IRRI industrial extension project in Indonesia

The Government of Indonesia and the USAID Mission in Jakarta expressed interest in expanding the USAID/IRRI Industrial Extension Program to include Indonesia. To more fully assess the need for such a project and to organize and set the direction of the proposed project, Mr. V. R. Reddy was retained as a Consultant. The objectives of his consultancy were to identify public and private agencies that have objectives in consonance with the proposed project, identify areas in Indonesia where food production is most limited by the lack of IRRI-type mechanization, survey credit availability, assess in-country manufacturing capacity and capabilities, and identify existing and potential marketing channels for agricultural machinery.

Over a period of seven weeks during September and October 1977, Mr. Reddy traveled extensively in Indonesia, visiting the provinces of West Central and East Java; Southwest and North Sumatra; Bali; and South Sulawesi. He met and discussed mechanization issues with key men in several Indonesian government departments as well as the local officials of international financial institutions and technical assistance agencies. Also, during his visits to rural areas discussions were held with local Department of Agriculture and farm cooperative leaders, agricultural machinery dealers, small farmers, and small manufacturers. Mr. Reddy's findings and recommendations have been published in a Consultant's Report which was submitted to USAID.

Technical consultancy and manufacturing cost reduction project

Two manufacturers in Davao City, Mindanao, Philippines were visited during this reporting period, bringing the number of manufacturers assisted by IRRI's technical consultancy to 11. Regional distribution of the 11 manufacturers is: three in Greater Manila, four in other provinces of Luzon, two in the Visayas Region and two on the Island of Mindanao.

Small shops often have difficulty in visualizing and interpreting the assembly drawings of some IRRI designs and they spend considerable time studying the drawings before a prototype can be fabricated. A process chart was prepared for the power tiller and portable thresher to help these manufacturers organize and understand the information on the assembly drawings. The process chart presents the information in a clear and orderly way for determining the relationship of a component part with the other parts of the assembly. It also shows the point and sequence of assembly of each part, the manufacturing operations to be performed and, in some cases, the estimated time required for each operation. Figures 18 and 19 show portions of the process charts for the 6-8 hp power tiller and the portable thresher.

In most cases, a plant and equipment layout is prepared as part of the technical consultancy. The layout is based on the manufacturer's current equipment inventory, building size, and site. A suggested rearrangement is presented to help improve the flow of material and workers, reduce material handling time, and afford easier control of workers and material.

Several requests have been received from cooperating manufacturers and network cooperators regarding the manufacture of IRRI machines on a small scale. In response, a generalized study was prepared showing typical initial investment costs, annual operating expenses, machinery/tool and manpower requirements, and other miscellaneous production related data needed for producing IRRI machines on a small scale. The study included a typical manufacturing shop layout.

A draft of the skill development manual mentioned in the last report was completed and copies were distributed to the IRRI/USAID Industrial Extension Projects and subcontracts attending the International Agricultural Machinery Workshop. The manual includes information on charting techniques for identifying production method inefficiencies, production planning and control, plant layouts, control procedures, and other guidelines for improving manufacturing management. Feedback from users of the draft manual will be used to improve the manual before it is widely distributed.

The manufacturing cost estimates of the power tiller given in Table 13 of Semiannual Report No. 24 excluded the cost of its accessories. Table 14 gives the estimated costs of the moldboard plow, comb harrow, puddling wheels, and other attachments for the power tiller.

IRRI designers were assisted by cost analysis of alternative design proposals. The redesign of the Savonius windmill with a single-acting pump using a cast concrete housing effected an estimated 15% reduction in manufacturing cost.

Grain dryer value analysis

Modification and testing continued during the reporting period to improve the performance of the vertical-bin dryer. Table 15 shows the results of four performance tests. Efforts to reduce the rather large moisture content difference (over 4 percentage points in tests 2 and 3) between the air inlet and discharge sides of the grain column were successful in the fourth test. The results of that test showed that reducing the drying air temperature to 38°C during the final hour of drying decreased the moisture content difference between the air inlet and discharge sides to 2.98 percentage points. This value is smaller than observed in previous tests on the same dryer and on the one ton IRRI batch dryer with a 33 cm grain bed depth. Grain moisture content and relative humidity observations of the discharging air indicated that drying time at the reduced air temperature can be increased to two hours. Decreasing the drying air temperature during the last hours of drying will reduce the moisture content differential between the air inlet and discharge sides, prevent grain overdrying, and reduce fuel consumption.

The energy used to evaporate water from the grain and the overall thermal efficiency of the dryer was calculated to be 3564 BTU/kg (1620 BTU/lb) water evaporated and 71.42%, respectively. Overall dryer efficiency, including the energy consumed by the blower motor, was 65.7%. The dryer is planned for early 1978 release to manufacturers.

Industrial extension in the Philippines

It was mentioned in the last report that the industrial extension staff participated in the sorghum thresher development project in connection with the government program to increase production of feed grain. The project staff assisted in the testing of three prototype sorghum threshers in San Manuel, Tarlac to determine the best threshing cylinder and concave configuration. Results of these tests are presented in the Design and Development section of this report. The sorghum thresher was demonstrated upon request of the Bureau of Agricultural Extension, Davao Regional Office, to apprise farmers in that sorghum and rice growing area of its performance and availability.

Industrial liaison with cooperating manufacturers was continued during the reporting period. Assistance with manufacturing problems and interpretation of engineering drawings was given to five companies starting production of the power tiller. Technical supervision and assistance was extended to cooperating manufacturers in Mindanao and Laguna in adapting the portable thresher for sorghum threshing. Techniques for manufacturing the new vertical bin batch dryer were discussed with cooperating manufacturers and samples of the improved kerosene burner were provided free of cost. The Industrial Extension Staff also worked with the National Grains Authority and the Metals Industry Research and Development Center regarding the release of the new batch

dryer design. Drawings of the portable grain cleaner were released to four companies for commercial production. One company in Los Baños, Laguna has successfully passed the test and evaluation phase and is commercially producing the grain cleaner.

Companies in the Visayas were visited twice while those in Davao and Metro Manila were visited three and five times, respectively. Three trips were made to assist one cooperating manufacturer who was involved in litigation for an alleged patent infringement on the portable thresher.. Mr. S. A. Gutierrez testified during the court hearings that the thresher was based on the original design by IRRI. The court ruled in favor of the IRRI cooperating manufacturer.

The project staff presented lectures on manufacturing economics, value analysis, product pricing procedures, and methods improvement as part of the training program held during the 2-week engineering training course. Assistance was also provided in organizing and conducting the tour of cooperating manufacturers' plants, which gives the trainees an insight into the engineering techniques and production methods employed by Filipino manufacturers of IRRI machines.

Presentations and lectures on Small Scale and Appropriate Farm Mechanization were given to participants of four Department of Agrarian Reform seminar-workshops on Project Development and Planning held during this reporting period. As discussed in the previous report, the DAR seminar/workshop effectively compliments the IRRI Industrial Extension Project in disseminating information about the IRRI Rice Machinery Development Program.

Industrial extension in Thailand

During the period of August 29-September 3, 1977, the IRRI-Thai Program in cooperation with the Agricultural Engineering Division organized a training course in the manufacture and use of IRRI machinery. Instruction was given in the Thai language. Agricultural Engineering Division facilities and staff were utilized extensively and without this assistance, the course would not have been possible. Mr. Jose Arboleda, IRRI Los Baños, assisted with the training course which was attended by 10 participants from various manufacturers. Several officers from the Agricultural Engineering Division gave lectures on their area of interest. The Industrial Service Institute (ISI) also provided personnel to help with running the course. ISI is involved with promoting, testing and improving manufacturing facilities in Thailand and has helped the project staff on failure analysis problems. Slides and films on farm machinery were shown to the participants and manufacturer tours were scheduled during the course. The course ran smoothly and was successful.

The project was in contact with the Northern Regional Agricultural Development Center and Thai-Australia Land Development Project who are cooperating with the promotion of IRRI batch dryers.

The project is also cooperating with the Thai-German Agricultural Extension Project and Thai-German Agricultural Engineering College, two organizations that are involved in farm machinery development.

Occasionally, when a program about farm machinery is shown on Bangkok television, IRRI is mentioned as an international organization working on farm machinery development. Not long ago the IRRI thresher was shown on such a program.

In the provinces there is a yearly festival or celebration at which farm machinery produced by local manufacturers is displayed to the people, most of whom are farmers. IRRI machines are loaned for display at these festivals. During this reporting period the project staff conducted demonstrations for farmers on five occasions and tested prototypes from three cooperating manufacturers.

Leaflets on the IRRI 6-8 hp tiller, instruction manuals for the multihopper seeder and IRRI newsletters were translated and printed in Thai language.

Extensive travel took place in Thailand to locate potential manufacturers, demonstrate machines, and give assistance to manufacturers. During a visit to Nepal in December, the project staff helped with the testing of a prototype axial flow thresher.

During the period of this report, 10 memoranda of agreement have been received in Thailand and 56 sets of drawings were distributed to organizations in Thailand and other countries.

Progress was made on improving the IRRI thresher's performance in Thai rice varieties. An "awner" has been designed and manufactured and other modifications to the axial flow thresher have resulted from the help of cooperating manufacturers. The hopper for the multihopper seeder has been redesigned for easier manufacture and a prototype was made of the new design.

The number of manufacturers who are not cooperating manufacturers but produce IRRI machines by copying those produced by cooperating manufacturers has increased. Notices were sent to advise them of the advantages of being cooperating manufacturers. This situation has become noticeable in Chonburi Province where a number of manufacturers have copied the machines produced by a cooperating manufacturer in that area. Sales of the thresher in this province has justified the investment made by IRRI in training personnel from this company.

The third consultant from Georgia Institute of Technology assisted the project during this period, his main activities involved in collecting information on credit availability to finance farm machinery. He also conducted surveys to determine the priority machinery needs of farmers.

Industrial extension in Pakistan

Commercially produced axial flow threshers from two companies were tested during the 1977 paddy harvesting season. During these tests a number of fabrication errors were rectified and further design modifications incorporated. The spiral angle of the pegteeth and knives on the threshing drum was increased from 6° to 15°; one additional louver was installed in the drum cover to deliver threshed material to the center of the straw thrower; and a straw guide baffle was welded to the drum cover for smoother movement of the threshed material and better ejection of straw from the straw outlet. The area of the lower screen, above the grain pan, was increased by .10 m^2 to minimize separation losses when threshing over .75 t/hour.

After incorporating these modifications both threshers were tested in farmers' fields in Sheikhupura and Faisalabad. Threshing output was 0.7 t/hour with semi-dwarf IRRI varieties and 0.35 t/hour with the long Basmati 370 variety. Overall grain losses throughout these tests were 1.5% for dwarf paddy and 0.9% for Basmati 370. This thresher design has been released to eight manufacturers and some of these manufacturers plan commercial production for next year's harvest season.

The mini thresher was field tested at two locations, Mansehera and PARC, Islamabad, during the last season. Some minor design changes were incorporated in the machine. The threshing drum speed of 550-575 rpm was satisfactory for threshing paddy and soybeans but 660 rpm was necessary for shelling maize. In 40 hour tests, the threshing output was 148 kg/hour for soybeans with 98% grain purity, 260 kg/hour for paddy, and 370 kg/hour for maize.

A cooperating manufacturer in Lahore was given assistance in modifying four axial flow threshers that were fabricated from engineering drawings received directly from IRRI. These machines were tested and demonstrated in farmers' fields during the last rice harvesting season. Farmers were generally pleased with performance and many indicated their desire to purchase this type of thresher. As a result, the manufacturer has developed plans to market the IRRI thresher during the forthcoming wheat season.

The project staff also assisted four other manufacturers (located in Mian Channu, Gujranwala, Lyallpur and Rawalpindi) in fabricating and testing their axial-flow thresher prototypes. The Rawalpindi manufacturer also built a prototype of the mini thresher and 35 manually-operated paddy weeders.

Drawings are being prepared for the axial-flow thresher and mini-thresher that show modifications developed for conditions in Pakistan and these drawings will be distributed to six additional manufacturers who have shown interest in their production.

Two cooperating manufacturers participated in an exhibition held at the University of Agriculture, Faisalabad, in connection with an FAO seminar on cereal crops. One hundred and fifty representatives from 49 countries attended this seminar. The IRRI-PAK program objectives were presented by the project staff and IRRI machinery literature was distributed. The participants from the African and Middle East countries indicated a keen interest in the axial flow thresher for threshing rice, wheat, and other cereal crops.

The project.staff participated in two agricultural and industrial seminars, presenting the IRRI-PAK program. The project staff also made over 30 visits to cooperating manufacturers to assist in the fabrication of IRRI machines.

A newsletter (Volume 2 No. 2) was issued in July, 1977, and over 700 copies were distributed to manufacturers, farmer organizations, and government officials. This newsletter described general program objectives and highlighted efforts on the development of threshers and paddy transplanters for Pakistan.

Table 13. Number of IRRI-designed machines commercially produced during 1977.

Country	Number of Manufacturers	MACHINES						
		Power tiller	Axial flow thresher	Batch dryer	Power Weeder	Multihopper seeder	Chemical applicators	Total
India	9	30	68	3	0	6	0	107
Indonesia	2	6	0	5	0	0	0	11
Japan	6	0	0	0	30,000	0	0	30,000
Philippines	17	856	1,321	64	0	57	0	2,308 3/
Pakistan	6	0	26	0	0	0	20	49 1/
Sri Lanka	2	0	11	6	0	0	2	43 2/
Taiwan	1	0	0	1,500	0	0	0	1,500
Thailand	12	253	444	37	0	20	0	754
Egypt	1	0	10	0	0	0	0	10
Colombia	3	2	3	30	0	0	0	35
Malaysia	1	0	0	30	0	0	0	30
TOTAL	60	1,147	1,883	1,675	30,000	83	22	34,847

1/ includes 3 diaphragm pumps.

2/ includes 24 grain cleaners.

3/ includes 10 grain cleaners.

Table 14. Cost breakdown on IRRI-designed attachments of the power tiller.

Attachment	Direct Labor Cost (a) (1)	Mfg. Overhead Cost (b) (2)	Total DL & OH Cost (c) (1)+(2) = (3)	Material Cost Fabricated (4)	Material Cost Purchased (5)	Total Mat'l Cost (4)+(5) = (6)	Total Mfg. Cost (3)+(6) = (7)
			(U. S. Dollars)				
Pump mounting	0.56	0.84	1.40	4.78	-	4.78	6.18
Comb harrow	1.39	2.08	3.47	3.51	-	3.51	6.98
Moldboard plow	2.30	3.45	5.75	9.59	1.59	11.18	16.93
Counterweight	0.19	0.28	0.47	4.27	19.14	23.41	23.88
Upland cagewheel (one pair) with							
a. Cast iron wheel wt.	6.10	9.15	15.25	10.03	32.82	42.85	58.10
b. Concrete, 10 kg wheel wt.	6.10	9.15	15.25	10.03	11.09	21.12	36.37
Lowland cagewheel (one pair)	6.31	9.46	15.77	20.47	-	20.47	36.24
Rotary tiller (axle-mounted)(d)							
1. Rotary slasher	9.61	14.42	24.03	9.53	4.48	14.01	38.04
2. Rotary hoe	9.49	14.23	23.72	13.01	4.48	17.49	41.21
3. Rotary ridging	10.76	16.14	26.90	24.83	4.48	29.31	56.21
Grass cutter	7.39	11.08	18.47	23.08	17.99	41.07	59.54
Trailer	8.77	13.15	21.92	44.51	54.83	99.34	121.26

(a) US$0.27/man-hour
(b) US$0.40/man-hour
(c) Direct labor and overhead cost
(d) Each set includes 6 flanges and 36 blades.

Table 15. Vertical bin batch dryer test results.

Test	1	2	3	4
Moisture content (%)				
Initial	20.36	20.14	23.15	23.15
Final	13.96	13.51	14.00	14.24
M.C. Reduction	6.40	6.63	9.15	8.91
Final M.C. at				
Hot air inlet (%)	11.02	11.35	12.10	12.90
Hot air discharge (%)	14.72	15.93	16.89	15.88
Difference	3.70	4.58	4.79	2.98
Drying time (hr)	3	3	4	5
Static pressure (mm, H_2O)	39	36	23.6	30
Ave heated air temp (°C)	44.7	48.8	42.5	43.0[1]
Ambient air temp (°C)	32.8	30.0	31.1	27.2
Relative humidity (%)	67	77	80	72
Power consumption (kW)	2.18	2.17	1.40	2.16
Fan speed (rpm)	2000	2000	1750	2000

[1]Reduced to 38°C during last hour of drying.

Table 16. Industrial Extension Project Staff.

Name	Position
Philippines	
John A. McMennamy	Industrial Liaison Engineer
Simeon Gutierrez	Senior Research Assistant
Nemelito Langam	Senior Research Assistant
Rodulfo Angco	Draftsman
Enrique Macatangay	Shop Assistant
Estrella Castro	Secretary
Thailand	
P. Stewart Barton	Industrial Extension Engineer
Suwit Bunyawanichkul	Research Assistant
Chalit Choensombat	Technician
Vacharachai Pumarin	Draftsman
Juthaporn Charoenpravat	Secretary
Pakistan	
Amir U. Khan	Industrial Extension Engineer
Hamid Ayub	Research Assistant
Mohammad Ilyas	Research Assistant
Ghulam Sarwar	Research Aide
M. S. Malik	Administrative Assistant
Rana Saeed	Office Assistant
Mohammad Jamil	Shop Supervisor
Zahoor Ahmed	Bench Mechanic
K. D. Awan	Secretary

Table 17. Industrial Extension Subcontract Program Officers.

Dr. K. M. Badruddoza
Executive Vice-Chairman
Bangladesh Agricultural
Research Council
130-C Road 1, Dhanmandi
Dacca-5, Bangladesh

Ing. Rolf Kaeser
Mechanical Engineer
Asistencia Tecnica
a la Industria
Apartado Aereo 8053
Cali, Colombia

Dr. K. N. Singh, Head
Agricultural Engineering
Department
G. B. Pant University of
Agriculture & Technology
Pantnagar, Distt. Nainital
Uttar Pradesh, India

Mr. M. M. Suri
President
Suri Research Foundation
B-14 Greater Kailash
New Delhi - 48
India

Mr. R. Dadang Tarmana
Project Director
Directorate of Food Crops
Production
Department of Agriculture
Pasar Minggu, Jakarta
Indonesia

Dr. Sung Kum Han
Director
Institute of Agricultural
Engineering & Utilization
Office of Rural Development
Suwon, Korea

Dr. M. Hashim Noor
Assistant Director
Malaysian Agricultural Research
and Development Institute
P. O. Box 208, Sungai Besi
Serdang, Selangor, Malaysia

Mr. B. B. Khadka
Director General
HMG Department of Agriculture
HMG of Nepal, Kathmandu
Nepal

Mr. S. Kathirkamathamby
Superintending Engineer
Engineering Research and
Development Division
Department of Agriculture
Peradeniya, Sri Lanka

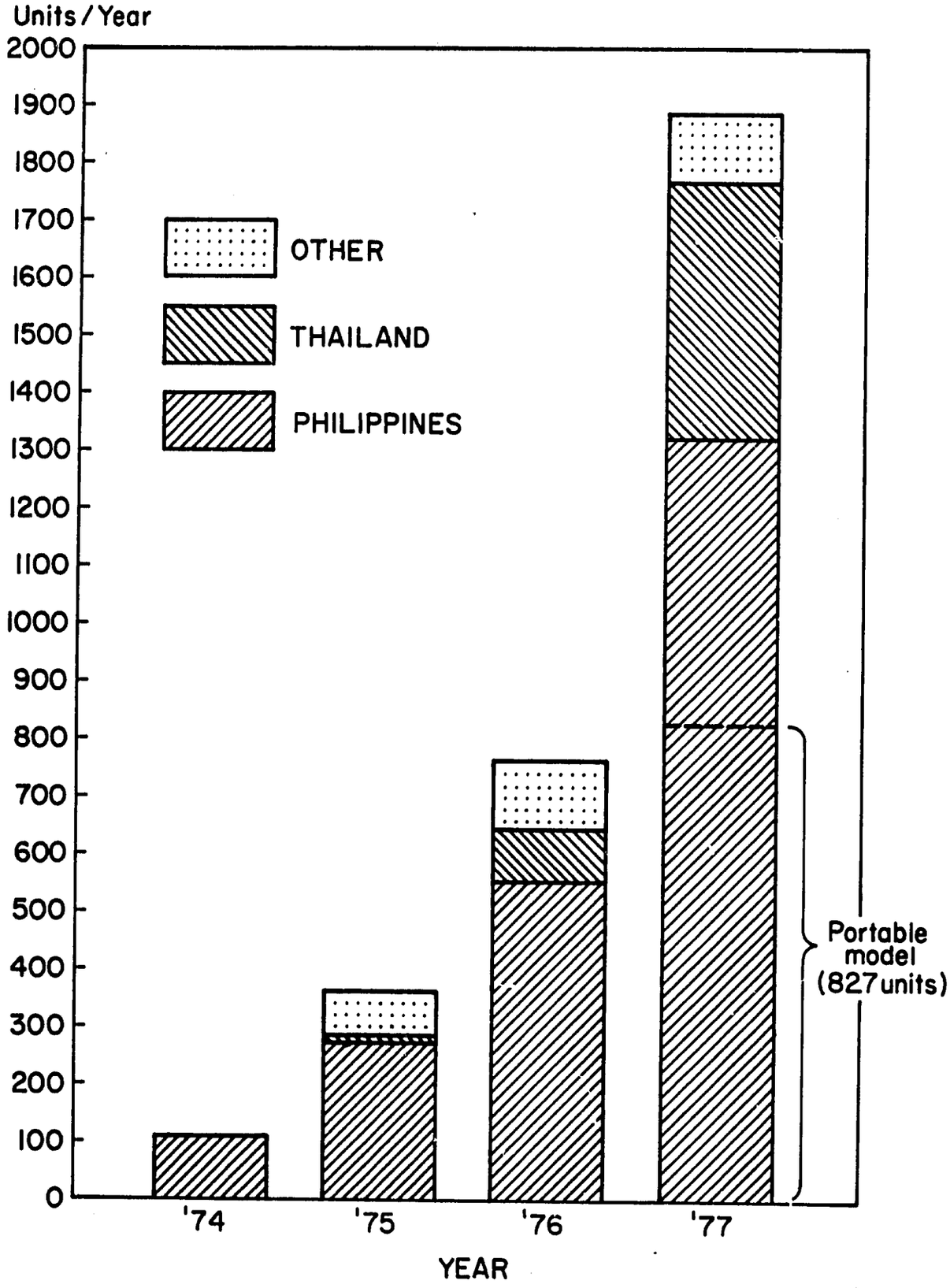

Fig.17 IRRI Axial - flow thresher production.

Fig. 18 PROCESS CHART FOR 6-8 HP POWER TILLER

W/ STEERING CLUTCHES

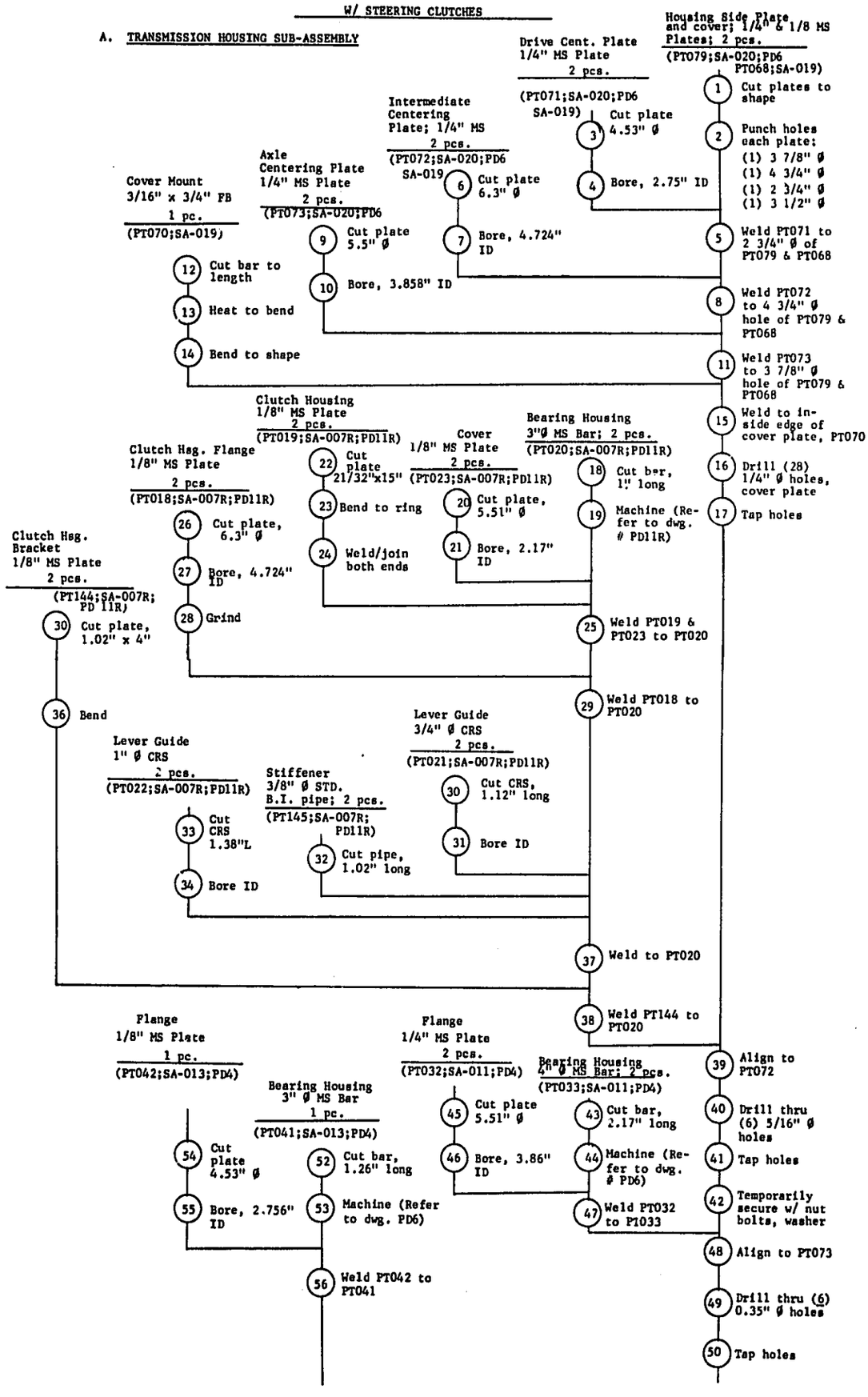

Fig. 19 PROCESS CHART OF THE PORTABLE THRESHER

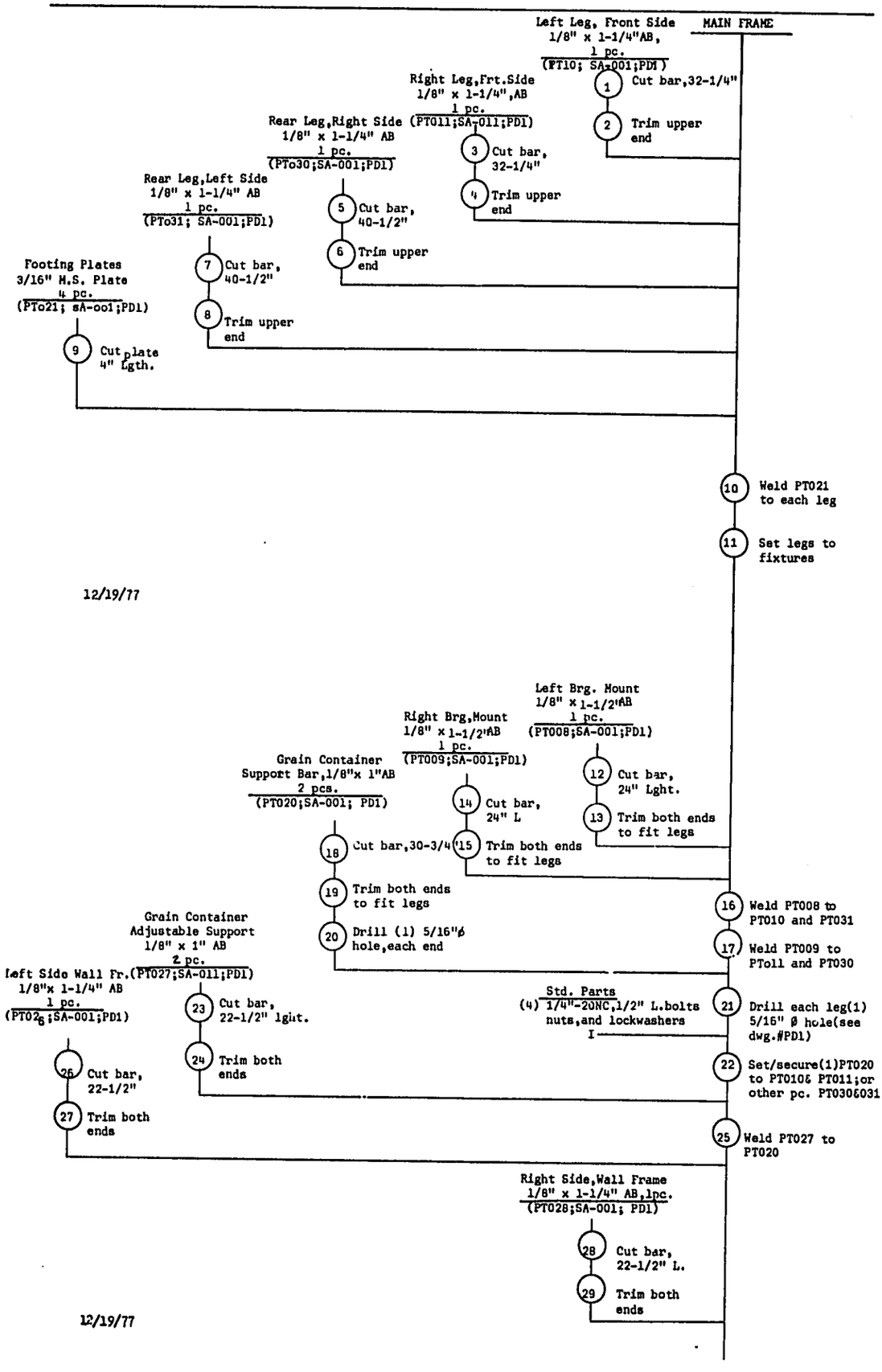

PERSONNEL LIST*

Name	Position
C. Moss	Agricultural Engineer & Department Head
B. Duff	Agricultural Economist
D. Kuether	Associate Agricultural Engineer
I. Manalili	Assistant Engineer
J. Policarpio	Assistant Engineer
H. Takai	Post-doctoral Fellow
K. Kim	Research Scholar
A. Resurreccion	Research Scholar
J. Arboleda	Senior Research Assistant
S. Labro	Senior Research Assistant
M. Aban	Research Assistant
A. Caballes	Research Assistant
F. Cabrales	Research Assistant
I. Camacho	Research Assistant (PA)**
R. Dayrit	Research Assistant
L. Ebron	Research Assistant
R. Echevarria	Research Assistant
G. Espiritu	Research Assistant
P. Hidalgo	Research Assistant (PA)**
F. Juarez	Research Assistant
L. Kiamco	Research Assistant
H. Manaligod	Research Assistant
C. Maranan	Research Assistant
G. Salazar	Research Assistant
M. Sumiran	Research Assistant
L. Banquilis	Student Assistant
L. Pua	Student Assistant
F. Jalotjot	Drafting Supervisor
M. Diestro	Draftsman
R. Pabustan	Draftsman
N. Rivera	Office Assistant
J. Reyno	Office Aide
A. Bagalso	Secretary
E. Co	Secretary
L. Bañez	Clerk-typist
E. Dungo	Shop Supervisor
A. Barot	Shop Assistant
Z. Borja	Shop Assistant
A. Camacho	Shop Assistant
M. Castro	Shop Assistant
A. Dizon	Shop Assistant
M. Fabellar	Shop Assistant

*Please see Table 16 for Industrial Extension staff.
**Project assignment.

Name	Position
C. Flojo	Shop Assistant
M. Macatangay	Shop Assistant
D. Manalo	Shop Assistant
P. de Mesa	Shop Assistant
M. Salac	Shop Assistant
R. Santos	Shop Assistant
F. de Leon	Field Assistant
L. Villegas	Field Assistant
G. Ladra	Field Assistant
E. Principe	Field Aide
P. Aldemita	Laborer
R. Capule	Laborer
R. Tobias	Laborer