AGENCY FOR INTERNATIONAL DEVELOPMENT
WASHINGTON, D. C 20523
BIBLIOGRAPHIC INPUT SHEET

FOR AID USE ONLY
Batch 81

1. SUBJECT CLASSIFICATION
A. PRIMARY: Serials — Y-AN20-0000-GG50
B. SECONDARY: Food production and nutrition--Farm equipment--Tropics

2. TITLE AND SUBTITLE
Rice machinery development and industrial extension; semi-annual progress report, Jan.-June,1977

3. AUTHOR(S)
(101) IRRI

4. DOCUMENT DATE	5. NUMBER OF PAGES	6. ARC NUMBER
1977	61p. 65p.	ARC

7. REFERENCE ORGANIZATION NAME AND ADDRESS
IRRI

8. SUPPLEMENTARY NOTES (Sponsoring Organization, Publishers, Availability)
(Research summary)

9. ABSTRACT

10. CONTROL NUMBER
PN-AAF-465

11. PRICE OF DOCUMENT

12. DESCRIPTORS
Agricultural machinery
Intermediate technology
Rice

13. PROJECT NUMBER

14. CONTRACT NUMBER
AID/ta-C-1208 GTS

15. TYPE OF DOCUMENT

AID 590-1 (4-74)

not ARDA

THIS DOCUMENT HAS BEEN EVALUATED AS SUBSTANDARD COPY FOR ROUTINE REPRODUCTION. EFFORTS IN AID/W TO OBTAIN A MORE ACCEPTABLE COPY OF THE DOCUMENT HAVE NOT BEEN SUCCESSFUL. DESPITE THIS DISADVANTAGE, WE HAVE CHOSEN TO REPRODUCE THE DOCUMENT BECAUSE OF THE SUBJECT TREATED AND TO MAKE THE DISCERNIBLE INFORMATION AVAILABLE.

AID/ta-C-1208 GTS
IRRI
PN-AAF-465

Semiannual Progress Report No. 24

January 1 – June 30, 1977

RICE MACHINERY DEVELOPMENT AND INDUSTRIAL EXTENSION*

*AID/ta-C-1208

AGRICULTURAL ENGINEERING DEPARTMENT

THE INTERNATIONAL RICE RESEARCH INSTITUTE

P.O. BOX 933 MANILA PHILIPPINES

ISSN 0115-2610

IRRI Rice Machinery Development

Primary objectives of the machinery development program are increasing the income and welfare of small rice farmers and fostering farm equipment manufacturing in developing countries. Improved mechanical technologies contribute directly to these goals by increasing food production through increased yields, reductions in field and post-production losses, increased cropping intensity, and improvement in quality and value of agricultural products. Appropriate machines can also reduce costs – a direct benefit to the low-income rice consumer. Mechanization based on local production conserves foreign exchange, expands opportunities in rural-based industries, strengthens linkages between agriculture and other sectors of the economy, and enhances training opportunities in small-scale manufacturing.

Program procedures begin by developing machines that satisfy two major conditions. First, designs must be compatible with the technical and economic needs of small farmers who use them. Second, the manufacture and servicing of the machines must be within the technical capabilities of indigenous small and medium-scale machine shops. Drawings, design information, and limited technical support are given free of charge to manufacturers who want to produce IRRI designs on a commercial basis, agree to the conditions of a Memorandum of Agreement, and provide information on their manufacturing facilities and marketing plans. IRRI retains worldwide distribution and patent rights for all designs developed at IRRI and does not grant exclusive manufacturing rights or licenses.

Training opportunities include a two-week engineering course that is conducted semiannually. Participants are expected to develop competency in the operation, maintenance, and manufacturing aspects of IRRI designs. Enrollment is limited to 12 persons per class.

Financial support for the development program comes from the IRRI budget which is funded by the Consultative Group on International Agricultural Research. Industrial extension projects in Pakistan, Philippines, and Thailand are supported by a United States Agency for International Development contract.

Location of the main research and development facility is the International Rice Research Institute, Los Baños, Philippines, with national liaison links found in countries throughout Asia, Latin America, and Africa. Reports describing program activities are issued semiannually and may be obtained upon request.

Agricultural Engineering Department
International Rice Research Institute
P. O. Box 933, Manila, Philippines

LIAISON OFFICES

IRRI/PAK Machinery Program
c/o LAPSA, P. O. Box 1237
Islamabad, Pakistan

IRRI/THAI Machinery Program
P. O. Box 2453
Bangkok, Thailand

TABLE OF CONTENTS

Title	Page
Introduction and Summary	1
Design & Development	4
6-8 hp tiller	4
Rice transplanter	5
Multicrop upland seeder	5
Windmill/piston pump	6
Double acting piston pump	6
Plow-sole granular chemical applicator	7
Portable thresher	8
Combine harvester attachment for power tiller	9
Portable grain cleaner	9
Steam engine	10
Engleberg rice mill improvement	10
Experimental rotating bowl mill	11
Tables and figures	12
Mechanization Research	22
Compacted soil studies	22
Power tiller upland tillage tests	22
Product development tests	25
Tables and figures	26
Mechanization Systems	31
IRRI-UPLB-BRBDP rice post-production technology project	31
Power tiller supply and demand in the Philippines	32
Tables and figures	34
Industrial Extension	39
Introduction	39
Technical consultancy and manufacturing cost reduction	39
Grain dryer value analysis	40
Industrial extension in the Philippines	43
Industrial extension in Thailand	43
Industrial extension in Pakistan	44
Tables and figures	47
Personnel list	56

INTRODUCTION AND SUMMARY

The portable thresher and portable grain cleaner were released to manufacturers during this reporting period. Both machines have been thoroughly evaluated in rice and development work is now in process to give them multi-crop capabilities. Substituting rubber flaps for some of the pegteeth converts the thresher to a good machine for sorghum. Field tests are being conducted.

The 6-8 hp tiller development project is nearing completion with release expected during the second half of 1977. Prototypes have thus far logged 1340 hours of laboratory and field testing. Early problems have been corrected and these changes are now being tested.

The 4-wheel tractor prototype has been shipped to the Pakistan Extension Project because cost analysis indicates that for initial acceptance of this tractor there may be more favorable economic conditions in Pakistan.

New development projects initiated during this period include a combine harvester attachment for the power tiller, plow-sole chemical applicator, and a horizontal piston pump for the windmill. The Engleberg rice mill improvement project was reactivated and work continues on the rice transplanter, steam engine, and upland seeder.

Tillage tests in hard upland soils with the 6-8 hp tiller show that axle-mounted rotary blades cause severe operator strain and point to the need for a PTO-driven rototiller. Drawbar pulls with various wheel equipment were compared and moldboard plow field trials were also completed.

Twelve engineers attended the two-week training course in February and 12 trainees are invited to the course scheduled for October of this year. Another training course is planned for February, 1978.

A study of the Philippine power tiller industry and power tiller users indicates that the power tiller has been the most successful modern machine adopted by the Filipino farmer. Present underutilization of manufacturing capacity in a fragmented market that is heavily influenced by special government finance programs requires that the power tiller industry develop a set of broad guidelines that will result in efficient and effective growth of the industry and provide the farmer with a reasonably priced, quality product.

The USAID-sponsored industrial extension projects in Pakistan, Philippines, and Thailand were favorably reviewed by local USAID missions during the first quarter of 1977. The industrial extension projects continue to support manufacturers in their areas by providing assistance in production management and cost reduction, developing manufacturing cost estimates for IRRI machines, investigating methods to improve IRRI machine performance in hard-threshing paddy varieties and wheat, and conducting

surveys on farmers' current machinery usage and future needs.

The value analysis of the batch dryer is nearing completion. The result is a simplified and more efficient burner/blower assembly and a vertical bin of 2-ton capacity, which is constructed of wood. Preliminary estimates indicate a substantial reduction in manufacturing cost on a per ton of capacity basis.

Nine industrial extension subcontracts are now active, with the addition of subcontracts established with Asistencia Tecnica a la Industria , Colombia, South America, and HMG Department of Agriculture, Nepal. Two issues of the IRRI Farm Machinery Newsletter were distributed during this period.

Papers and Publications

Mahmud, S. H. 1977. "New Power Tiller Developments at the International Rice Research Institute". Agricultural Mechanization in Asia. Vol. 8, No. 3. Summer, 1977. Paper No. 77-02.

Kuether, D. O. 1977. "Soil Compaction and Wetland Rice Tillage Systems". Paper No. 77-09. Forthcoming in the Journal of the Philippine Society of Agricultural Engineering.

Heinrichs, E. A., G. B. Aquino, J. A. McMennamy, J. Arboleda, N. N. Navasero and R. Arce. 1977. "Increasing Insecticide Efficiency in Lowland Rice". Paper No. 77-05. Agricultural Mechanization in Asia. Summer, 1977.

Policarpio, J. S., and J. A. McMennamy. 1977. "The Development of the IRRI Portable Thresher: A Product of Rational Planning". Journal of the Philippine Society of Agricultural Engineering.

Toquero, Z. F., C. Maranan, L. Ebron and B. Duff. 1977. "Assessing Quantitative and Qualitative Losses in Rice Post-Production Systems". Agricultural Mechanization in Asia. Summer, 1977. Paper No. 77-01.

Arboleda, J. R. and D. O. Kuether. 1977. "Test and Evaluation: A Necessary Component of Farm Machinery Development". Paper No. 77-04. Journal of the Philippine Society of Agricultural Engineering.

Villaruel, G. and B. Duff. 1977. "The Potential for Mechanization in Upland Cropping Systems of the Philippines". Paper No. 77-12.

Ebron, L. E. 1977. "A Selected Bibliography of Agricultural Mechanization in the Philippines". June 1977.

Juarez, F. and B. Duff. 1977. "Changing Supply and Demand Patterns for Power Tillers in the Philippines". Paper No. 77-03. Forthcoming in the Journal of the Philippine Society of Agricultural Engineering.

PROGRESS REPORT NO. 24
January 1 to June 30, 1977

The following projects were active during the reporting period:

Design and Development (J. McMennamy)

6-8 hp tiller	S. Mahmud, I. Manalili
Rice transplanter	I. Manalili, K. Kim
Multicrop upland seeder	N. Navasero, M. Aban
Windmill/piston pump	G. Salazar
Double acting pump	G. Salazar
Plow-sole granular chemical applicator	G. Salazar, A. Resurreccion
Portable thresher	J. Policarpio, G. Espiritu, S. Gutierrez, S. Labro
Combine harvester attachment for power tiller	G. Espiritu
Portable grain cleaner	J. Policarpio
Steam engine	L. Kiamco
Engleberg rice mill improvement	A. Caballes
Experimental rotating bowl mill	A. Caballes

Mechanization Research (D. Kuether)

Compacted soil studies	D. Kuether, F. Cabrales
Power tiller upland tillage tests	W. Gunkel, F. Cabrales
Product development tests	J. Arboleda, R. Dayrit, F. Cabrales

Mechanization Systems (B. Duff)

IRRI-UPLB-BRBDP rice post-production technology project	C. Maranan, L. Ebron, Z. Toquero, W. Gunkel
Power tiller supply and demand in the Philippines	F. Juarez

Industrial Extension (S. Barton, A. Khan, J. McMennamy)

Technical consultancy and manufacturing cost reduction	N. Langam, H. Manaligod
Grain dryer value analysis	J. Policarpio, J. Arboleda, H. Manaligod
Industrial extension in the Philippines	Project staff (table 14)
Industrial extension in Thailand	Project staff (table 14)
Industrial extension in Pakistan	Project staff (table 14)

DESIGN AND DEVELOPMENT

6-8 HP Tiller

The refinement of this design continued with the aid of information from ongoing field and dynamometer tests. Field tests uncovered a weakness in the axle assembly. After 300 hours of field testing the axle broke where it is welded to the final sprocket hub. Analysis revealed that the probable cause of failure was the use of improper welding techniques to join these parts. The welded joint was re-designed and no further failures have occurred.

Several chain failures were also experienced and these were attributed to insufficient clearance between the chain and transmission housing. The housing was widened and at the same time the center-to-center distance of the sprockets was adjusted to eliminate the need for a half link.

To evaluate an alternate steering clutch design in a short time, the dynamometer was modified to alternately disengage and engage each steering clutch at the rate of 17 times per minute. Comparative tests on the dynamometer and in the field showed that the design shown in Figure 1 had superior life so this design was selected for production. Development of this alternate clutch arrangement uncovered some weakness in the clutch shifting yoke assembly. These components were also re-designed to increase their strength and reliability.

Although chain life was not a problem in previous field and dynamometer testing, the dynamometer steering clutch test produced a chain failure after 21 hours. This early failure was attributed to high shock loads because many of the chain rollers were also cracked. The impact loading on the dynamometer is much more severe than that normally encountered in the field, but an effort was made to extend chain life on the dynamometer as there is a correlation between field life and life observed on the dynamometer. First, the final drive chain was increased from ASA No. 50 to ASA No. 60 pitch chain, but the larger chain failed after only 23 hours. Next, a spring-cushioned clutch plate was incorporated into the steering clutch (fig. 2). No. 50 chain was reinstalled and this arrangement failed after 38 hours of testing, a marked improvement. To better understand the nature of impact loads and improve the design, we plan to measure the loads with the aid of a torque transducer and an oscilliscope.

A simple sled that is attached to the hitch point of the power tiller with a steel cable was tried and worked very satisfactorily. The operator can ride on the sled during harrowing and this allows him to harrow an additional 0.25 hectares per day. In addition to being less tiring for the operator, the tiller can be operated at higher speed than is practical when walking. The sled is fabricated from a 3 mm thick steel plate, 30 cm wide x 60 cm long (fig. 3).

Rice Transplanter

The development of a rice transplanter mechanism continues. The crank push-rod arrangement was redesigned (fig. 4) to give a lower center of gravity and to provide additional clearance for tall seedlings. The pushrod is driven by a 38 mm radius crank rotating at three times the speed of the picker disk. The motion of the pushrod tip is similar to that of the previous pushrod arrangement and it gives a smoother release of seedlings without bulldozing.

The torque required to drive the prototype transplanter mechanism and commercially available designs from Japan was measured. These tests indicate that the forces required to drive mechanisms of this type make them unsuited for a manually operated machine. As a result, the plan to develop a manually operated transplanter was expanded to include an investigation of the feasibility of mounting the transplanter on a power tiller. The following are being considered:

1. Attaching the transplanter directly behind the power tiller to the implement hitch. Ground wheels attached to floats which support the system will drive the planting mechanism.

2. Mount the transplanter on one of the tiller final drive axles which is extended to accommodate the whole width of the machine. The transplanter is driven by the tiller's final drive axle and is attached to the axle with floating links to allow it to follow the surface independent of the hard pan depth.

Multicrop Upland Seeder

The prototype design described in the previous report was revised to improve ease of operation, fabrication, and adjustment. A second prototype was fabricated (fig. 5) and preliminary field testing conducted.

The revisions included widening of the frame and modification of the hopper for easier assembly to the main frame. A lighter material was used for the oscillating lever. A foot-operated tool bar lock and lever were added for operator comfort with the added component serving as a foot rest. To prevent mechanical damage of larger seeds, the adjustable cut-off brushes were provided and their mounting was changed for easy replacement. The seedplates were lined with metal to prevent wear of the wooden parts.

Preliminary field tests gave encouraging results. Good seed placement was obtained, and the problem of small-seed leakage was overcome by a new design of the seed tube compression spring. The presswheels performed well in good seedbed conditions but left the seeds uncovered on poorly prepared or compacted soils. The use of a furrow closer on the presswheels or adding a drag chain is being considered.

The second prototype is heavier (117 kg) than the first prototype (96 kg), and it is more difficult to turn at the end of the field. To assist in turning, a carabao hitch was designed and tested. The caster wheel hitch attaches to the front of the planter and serves as a guide during turning. Preliminary tests using a carabao showed that turning was easier and aligning the seeder with the last planted row requires less operator effort. The seeder will be tested with a power tiller to compare its performance in terms of draft and ease of turning.

Windmill/Piston Pump

It was previously reported that several windmill/piston pump units were installed at selected locations in the Philippines. Initially, these were used to pump water from dug wells, .76 m in diameter and about 7-8 meters deep. Preliminary results showed that the rate of pumping of the windmill-piston pump is appreciably greater than the water flow into the well at most of the installations. It took only 10 to 30 minutes of pumping at a wind velocity of 15-20 kph to remove all the water from the well.

Wells, 75 mm in diameter and 34 m deep, were then drilled at these windmill sites. The capacity of these wells ranged from 40-60 liters per minute at an approximate pumping depth of 6 m. At one site, a 60 m deep well was drilled without finding a good water bearing formation. This unit will be transferred to a site near an irrigation canal where the field level is about 2.5 m above the water level.

Problems were also encountered with the belt drive of the windmill-pump combination. Excessive belt wear was experienced so a double-acting horizontal pump is being developed to remedy this problem.

Double Acting Piston Pump

The pump will be driven by a crank located at the bottom of the windmill through a long tubular connecting rod (fig. 6). To reduce starting torque requirements while maintaining the same output as the previous design, a double-acting pump was designed.

A 100 mm (4 inch nominal) PVC pipe is used as the pump cylinder. To reduce costs, the pump casing and end covers are made of reinforced concrete (fig. 7). A pair of leather cups placed back-to-back with wooden follower plates serve as the piston. Discharge and suction valves located at the top and bottom of the pump body are arranged so when the piston moves in either direction, one end discharges and the other end draws in water. This arrangement reduces the load fluctuation on the windmill. "O" rings located between the cylinder and the casing seal the two pumping channels.

Steel molds were fabricated for casting the concrete casing and covers. Trial castings were made and after some modifications of the molds, the concrete parts were cast with reinforcing bars. A 1:2:3 mixture cured for 25 days was found suitable.

The pump will be tested to determine its capacity, power requirement, durability, and efficiency. Special attention will be given to evaluating the strength and durability of the concrete parts.

Plow-sole Granular Chemical Applicator

A project to develop a plow-sole granular chemical applicator was initiated in cooperation with the Agronomy Department. The applicator will place fertilizer at a soil depth of 10-12 cm during the plowing operation. Combining the operations of plowing and fertilizing are expected to reduce the workload of the farmer, avoid the difficulty of pushing the granular and liquid fertilizer applicators developed earlier, and improve the efficiency of fertilizer over the traditional broadcast methods.

The first prototype of the plow-sole applicator was patterned after the IRRI multi-hopper seeder. It utilized a 7 cm diameter roller with eight pockets uniformly spaced along its periphery and a centrally located groove to prevent axial movement. A 37 cm diameter ground wheel positioned in the furrow drove the metering device through a covered roller chain drive with a 2:1 speed ratio. The fertilizer dropped in the furrow and was subsequently covered by the furrow slice of the succeeding row plowed (fig. 8). Initial tests gave a higher discharge rate than expected because fertilizer was also being metered over the roller and the center groove.

At this point, a separate but complementary study of the design of metering devices for granular chemical applicators was started. Literature on existing designs was reviewed and the designs were rated according to pre-determined design criteria. Based on these ratings, the following designs were considered for use in the plow sole applicator:

1. single plain roller
2. horizontal belt
3. fluted feed
4. adjustable orifice with agitator

The final choice of metering device will depend on the results of laboratory and field tests.

Tests were conducted to verify the performance of the single plain roller metering device fitted to the plow-sole applicator. This device consisted of a plain roller with a centrally located groove of a given width and depth from which the fertilizer is metered (fig. 9). To vary the discharge rate, the groove depth and width were varied. The results of the test are given in Table 1.

To avoid the inconvenience and expense of changing rollers to change metering rate, a second prototype was constructed with a provision to adjust the groove width by sliding a PVC collar along the axis of the roller (fig. 10). Initial tests gave satisfactory results (table 2). The manner of changing the discharge rate was cumbersome and time-consuming as a bottom plate had to be removed and changed with each adjustment. The roughness of the groove surface also significantly influenced the discharge rate as shown in Table 3.

A third prototype with the single plain roller provided for adjustment of the groove depth by using a sliding vertical plate (fig. 11). The change in discharge rate was not constant per unit change in depth exposed by the sliding plate (table 4).

It was decided that adjusting the groove width was the best way of varying the discharge rate but the mechanism for adjusting the width needs to be simplified and the influence of surface roughness minimized. Fluted rollers will be tested with a provision to adjust the width of flutes exposed to the fertilizer. This will make metering more positive, thus minimizing the effect of surface roughness.

Portable Thresher

Following release of the IRRI portable paddy thresher to manufacturers in early 1977, efforts were directed toward developing its capability to thresh other crops, particularly those grown in rotation with rice. Modification of the machine to thresh sorghum took place first and development of modifications for other crops such as soybeans and ground nuts are incomplete.

Initial attempts to thresh sorghum were conducted using the portable thresher without modifications. In this configuration, separation losses were 6.5%, and capacity was 354 kg/h. Of more concern than the high losses was the nature of the threshed material. About 10% of the grain was detached from the panicle in clusters which could not be easily separated by rethreshing.

Only the sorghum panicle is threshed and typical straw-grain ratios range from 1:5 to 1:6. The small amount of straw makes it relatively easy to recover the separation loss, so efforts were concentrated on reducing the unthreshed loss and grain in the panicle clusters. Preliminary tests with a cylinder using rubber flaps made from used tire carcasses in place of peg teeth showed promise for reducing unthreshed loss (fig.12). However, the clusters problem persisted when using the rice thresher concave, and four concaves with smaller screen openings were tested:

1. Smooth perforated sheet metal with 8 mm diameter holes and 47% open area.

2. 4.8 mm diameter steel rods equally spaced at 8.7 mm.

3. Woven wire mesh with 2.5 mm dia. wires equally spaced at 12 mm.

4. Two layers of 4.8 mm dia. rods. The top layer of rods are spaced 17.5 mm. The lower rods are centered on the opening between the upper rods and down 4 mm (fig. 13).

Concaves 2 and 4 are modified versions of the rice thresher concave which has 4.8 mm diameter rods spaced 17.5 mm apart. All four concaves helped reduce the cluster problem, but separation loss was over 10% with 1 and over 20% with 2. Concave 4 was selected because it can be more easily

converted than 3 to the rice threshing mode by removing the lower layer of rods.

To select the best cylinder configuration, different arrangements of pegteeth, strippers and rubber flaps will be tested.

To further enhance the capability of the thresher, a mechanical screening system was added by mounting an inclined oscillating tray below the concave. The tray is plain sheet metal at one end and a series of steel strips folded 50° perpendicular to the axis of the threshing drum at the other. The strips are held together by 3 mm diameter cross wires, longitudinal to the tray and spaced 1.9 cm apart. This louvered type of screen directs the air blast from the engine-mounted fan upward through the screen so that the large pieces of straws tend to float off while the grain falls between the strips. An adjustable windboard below the tray regulates the airflow through the grain falling from the screen. To keep the price of the basic thresher low, the cleaning system can be offered as an optional attachment. The cleaning system will be tested.

Combine Harvester Attachment for Power Tiller

A combine harvester project was initiated during this reporting period. A cutter bar approach was selected over a stripper harvester because of the high losses reported for stripper harvesting methods. The machine concept embodies a cutter bar header for harvesting, use of the portable thresher for threshing and cleaning, and a power tiller to carry and power the thresher and header. The initial design is finished and part drawings needed to build a prototype are being prepared.

The header assembly is mounted directly in front of the power tiller and is supported by the tiller engine mounting bracket. The thresher is mounted behind the tiller and under the handle bar. Harvested paddy from the header is collected by an auger conveyor and transferred to the thresher by an enclosed underfeed belt conveyor. Threshed grain will be collected under the thresher in a pan which can be pulled out from either side for unloading.

The power tiller will need only minor modifications to accept the combine harvester attachment. The engine will drive a jackshaft mounted on the implement bracket of the power tiller. The input shaft of the power tiller gearbox will be driven by a roller chain drive from this jackshaft. This is required to reduce the forward speed to about 1.4 km/h for harvesting. The jackshaft will also drive the thresher and header assemblies.

The cage wheels will be replaced with pneumatic tires so the wheels are within the width cut by the header. Estimated weight of the combine harvester/tiller combination is 295 kg with a 7 hp diesel engine and 240 kg with a 10 hp gasoline engine.

Portable Grain Cleaner

The design of the portable grain cleaner reported previously was refined. To reduce side movement of the oscillating tray, the angle-iron

in Nueva Ecija Province has total and head recoveries of 67.4% and 54.3%, respectively. A mill manufactured in Manila produces 66.3% and 45.1% total and head rice recoveries, respectively. These data were obtained when batch-dried IR38 paddy with a purity of 97.5% and moisture content of 13.66% was used. A total rice recovery of 61.2% was obtained with paddy that was solar dried, when milled at a commercial establishment in Nueva Ecija Province.

Visits to various Engleberg mill manufacturers will be made to obtain additional guidance for mill improvement.

Experimental Rotating Bowl Mill

Design of a rotating bowl mill for paddy has been initiated with the aim of developing of small, low-cost mill.

The principle of operation of the rotating bowl mill is to husk and remove the bran from paddy by friction produced by the grain moving against the rotating bowl, the stationary sleeve, and other grain moving down (fig. 16). Bran is extracted on the perforated stationary sleeve.

An experimental model was fabricated and initial polishing tests were made but results were not satisfactory. Various bowl and sleeve designs are being fabricated for test.

Table 1. Single plain roller metering device.

Roller diameter (cm)	Groove Width (cm)	Groove Depth (cm)	Discharge rate* (kg/ha)
a. constant width			
7.4	.63	.63	53.56
7.4	.63	1.27	103.49
7.4	.63	1.90	92.23
7.4	1.27	.63	89.94
7.4	1.27	1.27	116.70
7.4	1.27	1.90	142.84
7.4	1.90	.63	191.71
7.4	1.90	1.27	257.07
7.4	1.90	1.90	336.91
b. constant depth			
7.4	.63	.63	53.56
7.4	1.27	.63	89.94
7.4	1.90	.63	191.71
7.4	.63	1.27	103.49
7.4	1.27	1.27	116.70
7.4	1.90	1.27	257.07
7.4	.63	1.90	92.23
7.4	1.27	1.90	142.84
7.4	1.90	1.90	336.91

Table 2. Single plain roller metering device (adjustable width)

Roller diameter (cm)	Groove Width (cm)	Groove Depth (cm)	Discharge rate* (kg/ha)
6.5	.63	.42	34.95
6.5	.95	.42	78.84
6.5	1.27	.42	110.23
6.5	1.60	.42	138.52
6.5	1.90	.42	176.24
6.5	2.22	.42	207.78
6.5	2.54	.42	251.99

*Discharge rate based on 0.35 m groundwheel diameter and 0.15 m width of cut.

Table 3. Effect of surface roughness on discharge rate.

Roller diameter (cm)	Groove Width (cm)	Groove Depth (cm)	Condition of surface	Discharge rate (kg/ha)*
7.7	1.8	0.16	w/o knurls	36.59
7.7	1.8	0.16	w/ knurls	75.79
7.7	1.8	0.32	w/o knurls	-
7.7	1.8	0.32	w/ knurls	198.00

*Discharge rate based on 0.44 m groundwheel diameter and 0.40 m width of cut.

Table 4. Single plain roller metering device (adjustable depth).

Roller diameter (cm)	Groove Width (cm)	Groove Depth (cm)	Discharge rate (kg/ha)*
7.6	1.27	.31	73.00
7.6	1.27	.63	144.00
7.6	1.27	.95	228.94
7.6	1.27	1.27	343.41
7.6	1.27	1.60	355.97
7.6	1.27	1.90	364.63

*Discharge rate based on 0.35 m groundwheel diameter and 0.15 m width of cut.

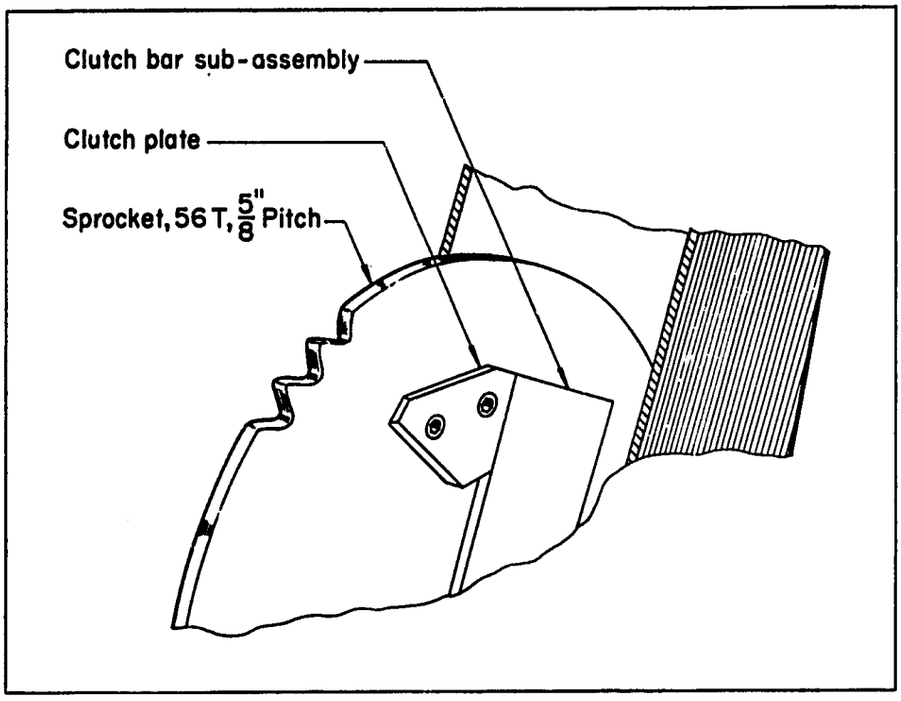

Fig. 1 Revised steering clutch design.

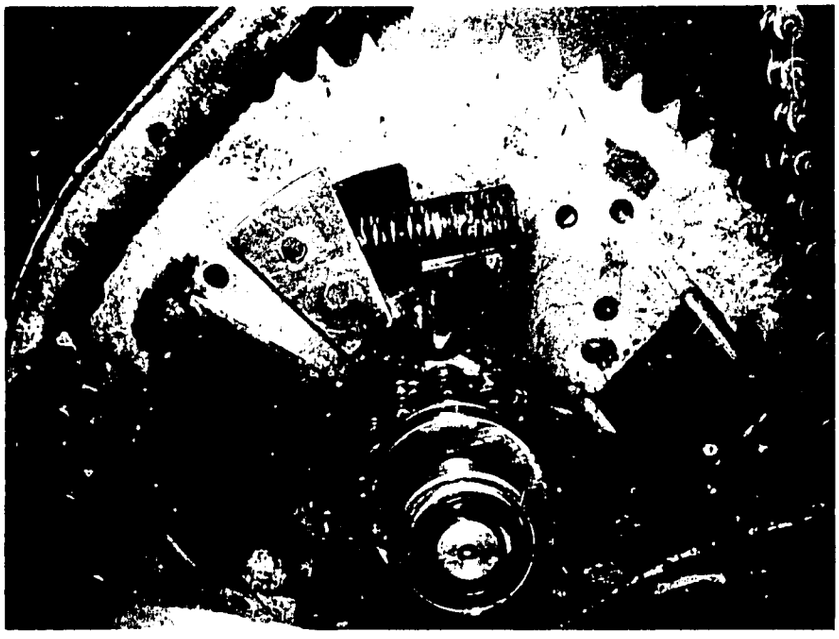

Fig. 2 Cushioned clutch design.

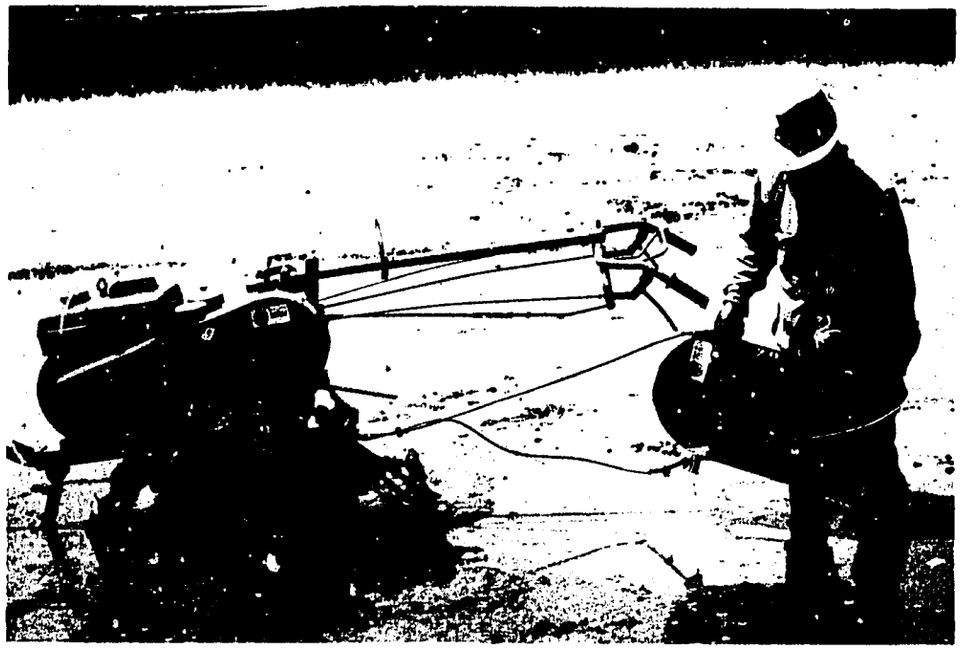

Fig. 3 Power tiller sled.

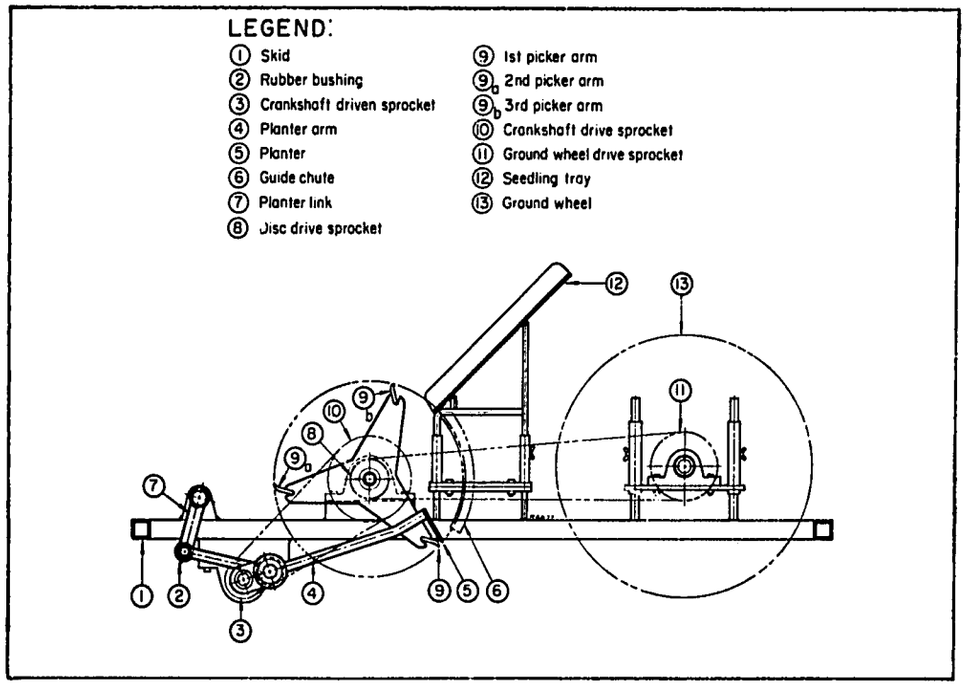

Fig. 4 Transplanter push rod linkage.

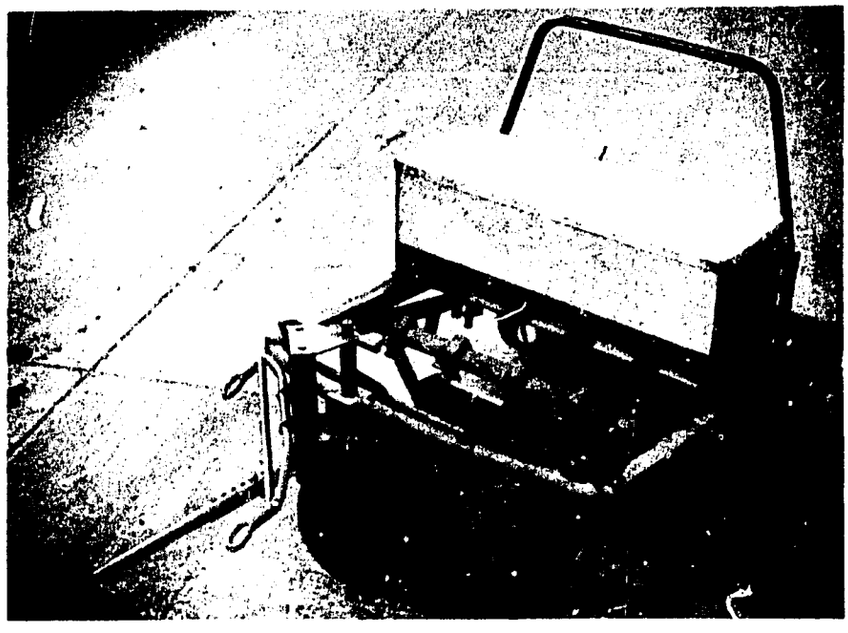

Fig. 5 Multicrop upland seeder.

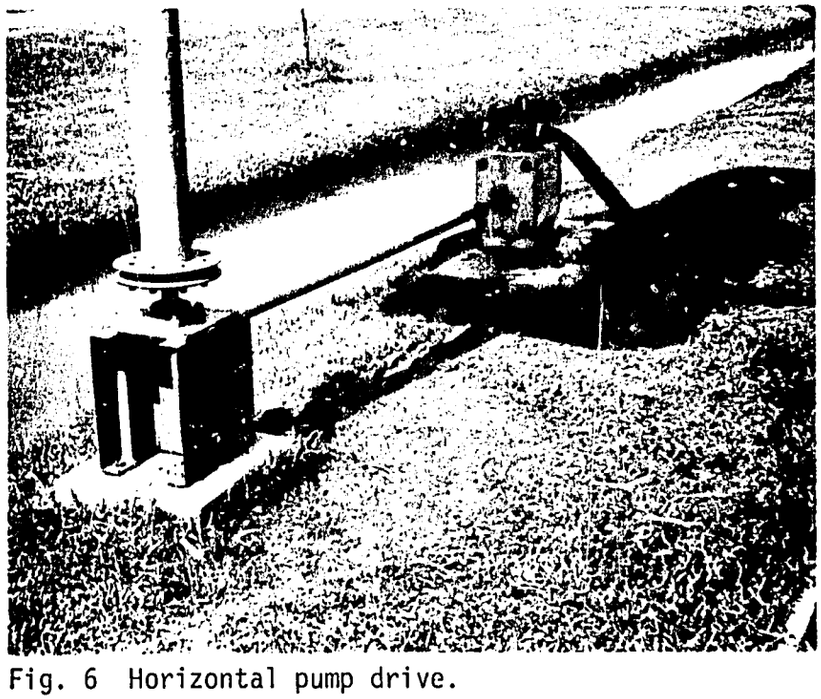

Fig. 6 Horizontal pump drive.

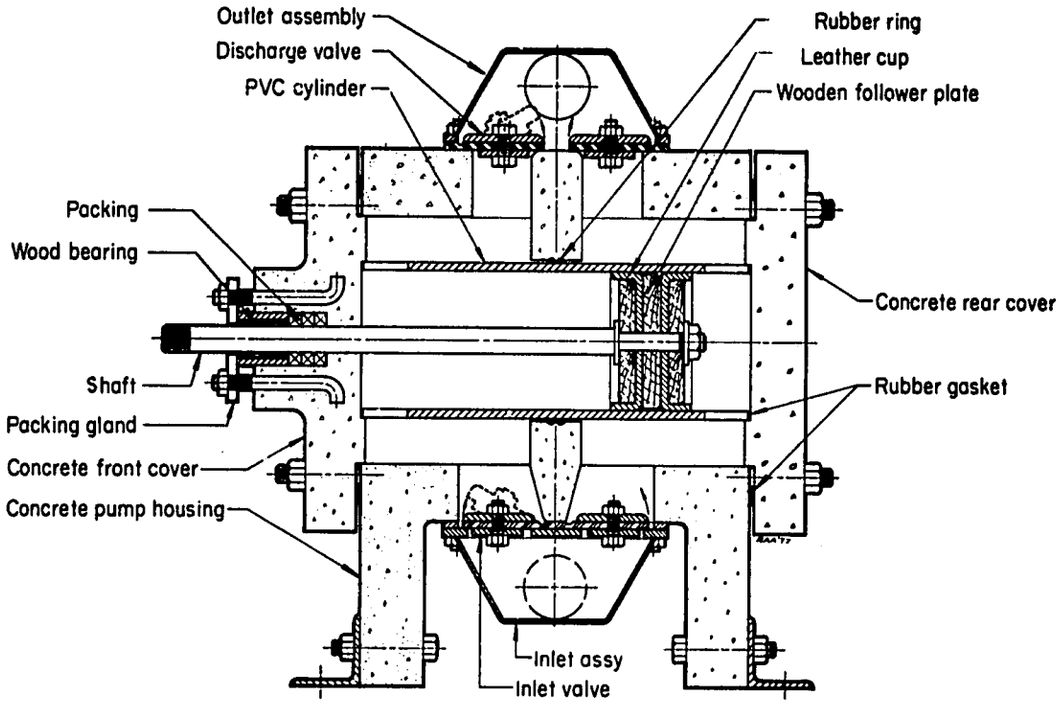

Fig. 7 Horizontal, double-acting, piston pump with concrete casing.

Fig. 8 Plow-sole chemical applicator.

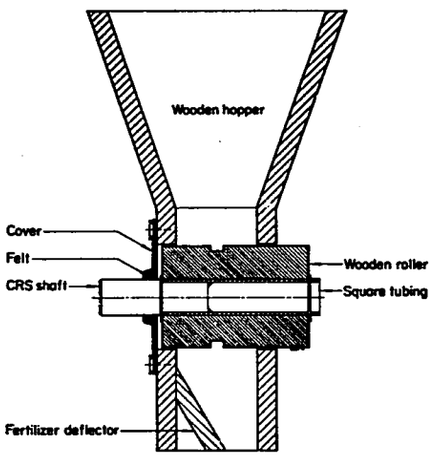

Fig.9. Center groove metering roller.

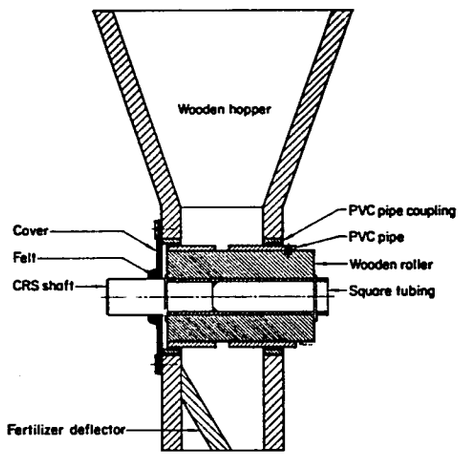

Fig.10. Adjustable width metering roller.

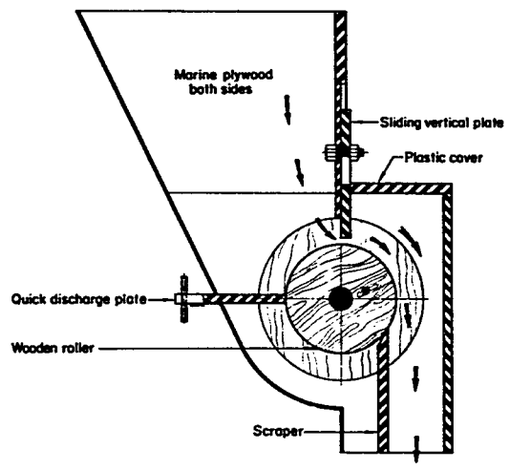

Fig.11. Adjustable depth metering roller.

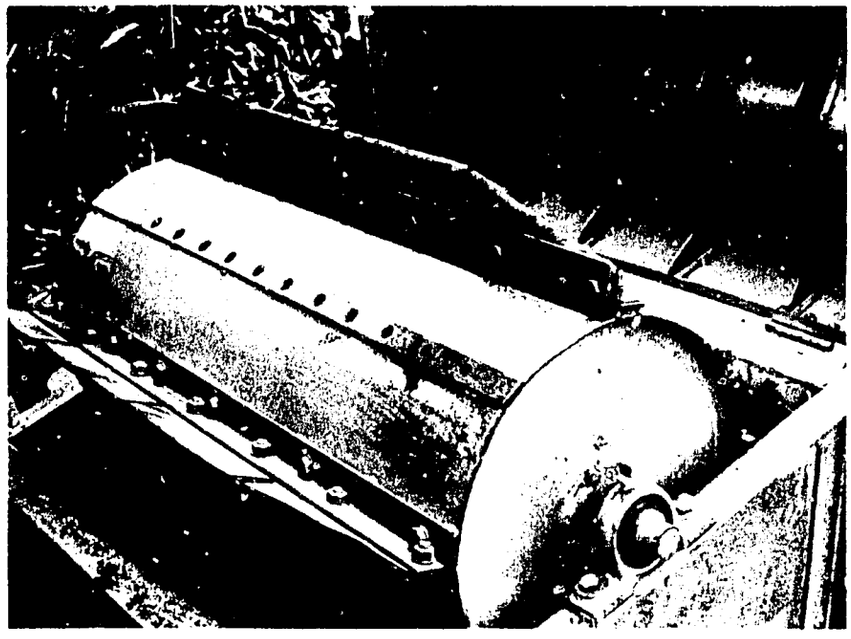

Fig. 12 Portable thresher with rubber flaps.

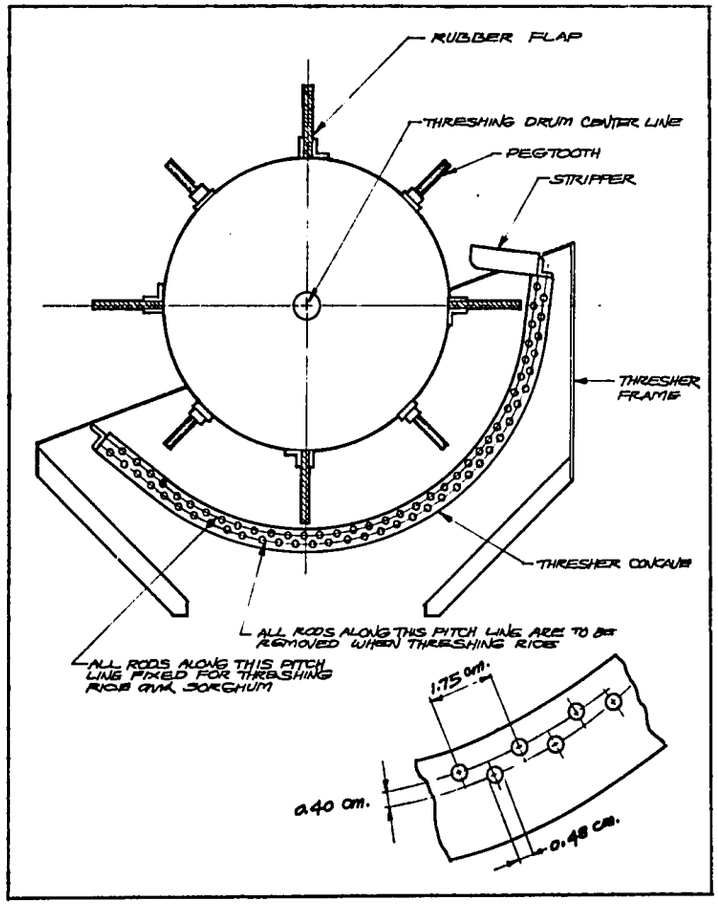

Fig. 13 Portable thresher concave for sorghum

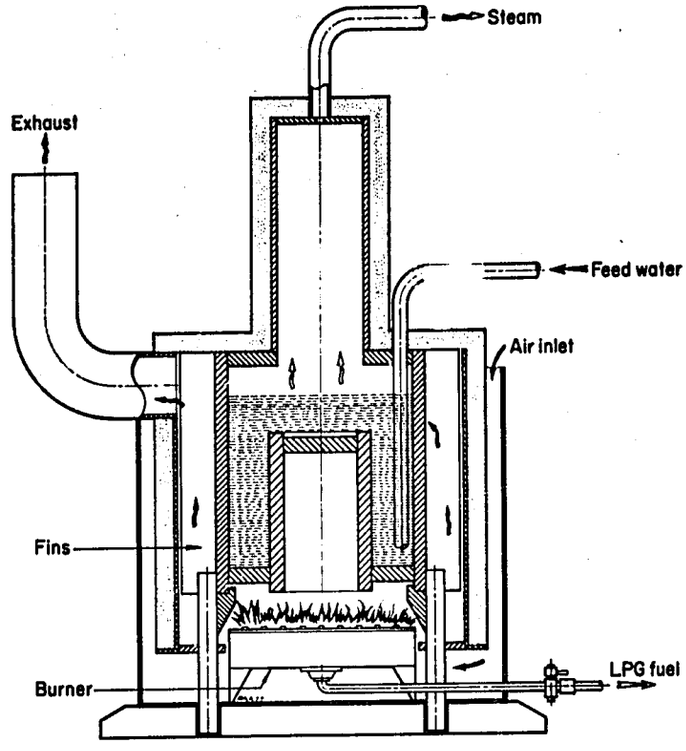

Fig. 14. Free convection boiler.

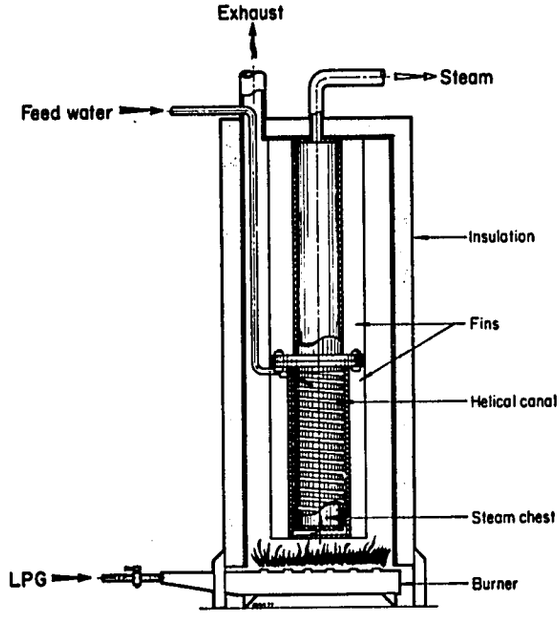

Fig. 15. Film evaporation force convection boiler.

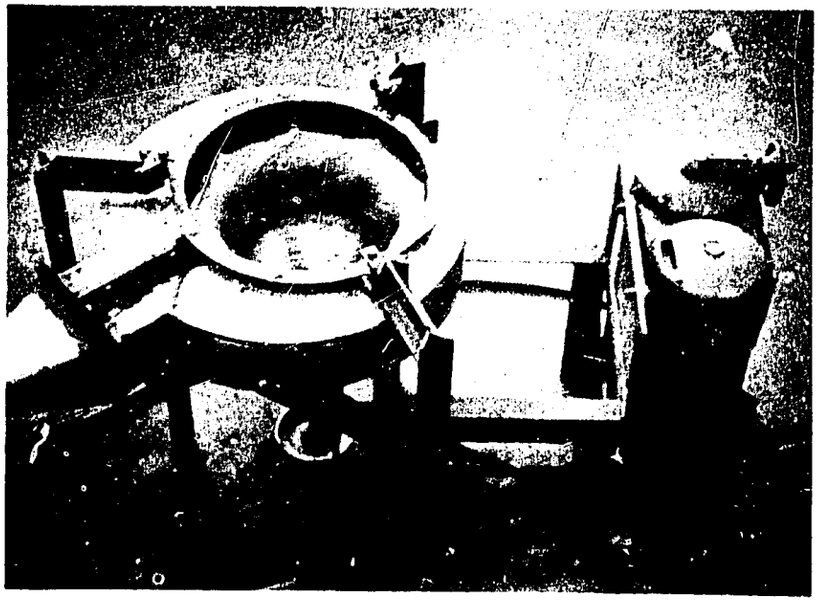

Fig. 16 Rotating bowl rice mill.

MECHANIZATION RESEARCH

Compacted Soil Studies

This study is now in the ninth cropping season. The depths at which 2.46 kg/cm^2 was measured increased up to 3 cm in some plots although depths at which 4.92 kg/cm^2 was encountered generally remained stable between crops eight and nine (fig. 17). It is quite possible that depth stability will not occur under the continuous cropping plan, even in the plots tilled by the 5-7 hp tiller and water buffalo. The 4-wheel tractor plot continues to be tilled by the 5-7 hp tiller.

The land will be allowed to dry out during the one-month fallow period between crops nine and ten to determine the effect on soil depths. A more detailed analysis of the results of the first eight crops is available in a paper "Soil Compaction and Wetland Tillage Systems", which is available upon request.

Power Tiller Upland Tillage Tests

Semiannual Report Nos. 22 and 23 described upland cropping conditions in the Philippines. Farms were small but intensively cropped. Annual labor inputs were high with land preparation, planting, weeding and harvesting requiring a high percentage of the aggregate total. The coincidence of harvesting, threshing and land preparation on many farms in the same area limits the supply of hired or exchange labor.

The upland crop survey shows that land preparation is traditionally accomplished with water buffalo. Plowing alone required an average of 11 days per hectare with considerable variability depending on the season and crop. Over half of the farmers in the survey expressed an interest in an improved power source.

Because of this interest, tillage and traction tests were conducted with the new IRRI 6-8 hp power tiller. This study was designed to determine the suitability of the new tiller for upland soils. Rotary tillage, using two different blade shapes, and moldboard plowing using three different wheels were evaluated. Traction tests using four different wheels were also conducted.

The IRRI tiller was equipped with a diesel engine of 5 hp at 2400 rpm for all tests. The weight of the tiller including engine was 195.75 kg.

Rotary Tiller Test

In the first series of tests both IRRI hoe and slasher-type rotary blades were used. These blades were attached to the standard IRRI blade flange (PT-1A1-PT-007) modified to increase the diameter from 22 to 31 cm. The blade flange assemblies were mounted directly on the axle of the power tiller. Six flanges of six blades each were used, three sets per side.

The blades were uniformly spaced to till a total width of approximately 90 cm with a 20 cm undisturbed strip of soil in the center that was only partially tilled by the wide cultivator sweep attached to the restraining bar (fig. 18).

Plots, 29 m x 10 m, were staked out on untilled upland clay soil. Each plot was tilled using the "go-around method" where the operator starts plowing at the edge of the field and goes around until he reaches the center. Two operators were used, each tilling for one round while the other rested. The soil was tilled to a depth of 15 cm. Since it was difficult to maintain a uniform and correct depth, a 15 cm wide metal rim was welded to the outermost rotor flange on each side of the tiller. This improved both the stability and the resulting operation of the tiller. Field efficiency was impossible to measure because the forward speed varied with the amount of vertical force exerted by the operator on the restraining bar. Fuel consumption was measured for each test. Results of three replicated tests are shown in Table 5.

When tilling with the blades attached directly to the axle, the tiller was extremely difficult to control and physically exhausting to operate. These tests indicate that rotary tillage of upland soils with a power tiller of this horsepower class will in most cases require a rotary tiller attachment which is mounted behind the prime mover and driven from the power-take-off. This will allow the wheels of the tiller to stabilize the machine, provide constant forward speed and permit easier operation and control.

Drawbar Pull Test

Traction of a small two-wheel power tiller is relatively low and frequently limits its use on hard dry soils which occur during the dry season. To determine the capabilities of the IRRI tiller and moldboard plow on upland soils, traction tests were conducted using four different wheels (fig. 19):

1. Rubber tire - 6-13.00 - 6 ply Firestone Town and Country Tread - 21 psi air pressure

2. Rubber tire - 5-12.00 - 2 ply Bridgestone - Deep Lug Tread - 21 psi air pressure

3. IRRI lowland cage wheel

4. Ford DNT wheel with "Z" tread

The test road was laid out on the same type of soil as reported in the power tiller test but with an average moisture content of 22%.

For the traction test, the Agricultural Tractor Test Code, ASAE S209-4 was used.

To provide stability and eliminate any vertical force on the drive wheels resulting from towing the loading device, a two-wheeled cart was

attached to the power tiller by means of an articulated hitch. A load sled was then connected to the cart through a dynamometer and steel cable (fig. 20). The horizontal tractive force was varied by loading the sled with incremental weights. The total tractive force of the power tiller was slightly higher than the recorded dynamometer load as there was no simple way to measure the force required to pull the cart. However this force was small in comparison to the total load and it was neglected.

To give meaningful data, wheel weights and a front counter weight were added to the tiller and part of the weight of the operator was carried by the tiller. The total resulting vertical force on the tiller wheels was 286.3 kg.

Using the least square curve fitting technique, a cubic polynomial prediction equation expressing percent slip as a function of drawbar pull was formulated for each wheel type. A cubic polynomial equation was selected since the residuals were significantly less than either a straight line or quadratic equation.

Results of drawbar pull versus slip are shown in Figure 21.

Moldboard Plowing Test

The test procedure for the moldboard plowing test was quite similar to the rotary tillage trials. Plots, 29 m x 10 m, were staked out on the same field adjacent to the rotary tillage plots. Soils were identical and the average moisture content was 20.7%.

Each plot was plowed with an IRRI moldboard plow using the "head land method" where the operator plows one side, turns around at the end and plows down the other side. Turning on the ends was very difficult without using the steering clutches. Soil was plowed to a depth of 15 cm. Two operators were used for all tests. Each operator plowed three rounds and then rested while the other operator took his turn (fig. 22).

Three different wheels were used:

1. Rubber tire - 6-13.00 - 6 ply Firestone town and country tread - 21 psi air pressure.

2. IRRI lowland cage wheel

3. Ford DNT tractor wheel "Z" tread

Each test was replicated twice and fuel consumption was measured for each test. Field efficiencies were determined by measuring the time required to travel the length of the field under no load condition. The effective width of the plow was 16 cm. Results of the moldboard plowing trials are shown on Table 6.

Product Development Tests

Performance and durability testing of the portable grain cleaner was resumed after modifications mentioned in the Design and Development Section of this report were completed. Tests showed that the modifications resulted in smoother machine operation and simpler construction, with less noise and vibration. Cleaned grain purity of up to 98% can be attained and a cleaning grain loss of 0.14% was observed at the rated capacity of 1 ton/h. A total of 1250 hours of operation, with and without load, were logged on the cleaner without major failure, indicating that a satisfactory level of reliability has been obtained.

Field endurance testing of the portable thresher continued during this reporting period. One thresher has operated for 680 hours and two other test units have logged 390 and 230 hours of operation. These tests show that peg teeth of mild steel wear rapidly and must be rotated or replaced after 100 hours. Concaves that are not made of steel rods or heavy steel mesh have a short service life due to the abrasion of the paddy. Straw paddles and straw thrower housings encounter forces and abrasive action that require material thickness and configurations as specified in the drawings to provide adequate life. The field testing will continue until 1000 hours is reached on at least two machines so estimates on operational costs can be compiled.

Field and dynamometer testing of the 6-8 hp tiller now totals 600 and 740 hours, respectively. One prototype has logged over 500 hours in the field. Functional problems and failures were remedied and one additional unit was built for a 1000-hour field endurance test of which 100 hours has been logged thus far.

Dynamometer endurance tests of 210 hours and 255 hours were conducted in addition to those reported in Semiannual Report No. 23. The 210 hour test operated at 5.14 hp and was stopped when the RH final reduction chain failed at the connecting link. The first reduction chain and RH final reduction chain were replaced with the LH final reduction chain ommited to eliminate possibilities of torque feedback in the drive train system. The transmission operated for 255 hours at 3.1 hp (equivalent to 6.2 hp as both final reduction chains share the load in actual operation) with no abnormal wear except one broken roller on the final reduction chain. Thus, all transmission components except the chains operated for 465 hours without failure. Chain elongation was negligible at .067 and .024% for the first and final reduction chains, respectively. This elongation was lower than previous tests but may be due to a more accurate method of measurement used during the later tests. Dynamometer tests of the steering clutches that was described in the Design and Development Section will continue.

Table 5. Results of IRRI 6-8 hp tiller using two different blade shapes.

Blade Type	Steering Clutches	Time per Plot-Minutes		Fuel per Plot-Liters	
		Ave.	Std. Dev.	Ave.	Std. Dev.
Curved hoe	No	33.5	0.71	.50	0
Curved hoe	Yes	31.0		.39	
Slasher "L"	No	41.5	0.71	.60	3.54
Slasher "L"	Yes	33.0		.60	

Table 6. Results of moldboard plowing tests using the IRRI power tiller.

Wheel Type	Time per plot minutes		Fuel per plot liters		Field Efficiency percent	
	Ave.	Std. Dev.	Ave.	Std. Dev.	Ave.	Std. Dev.
Rubber Tire	66.5	4.95	.95	70.7	44	0.03
IRRI Lowland cage	69.1	1.56	.95	70.7	38	0.01
Ford DNT	57.8	2.09	.86	194.5	49	0.01

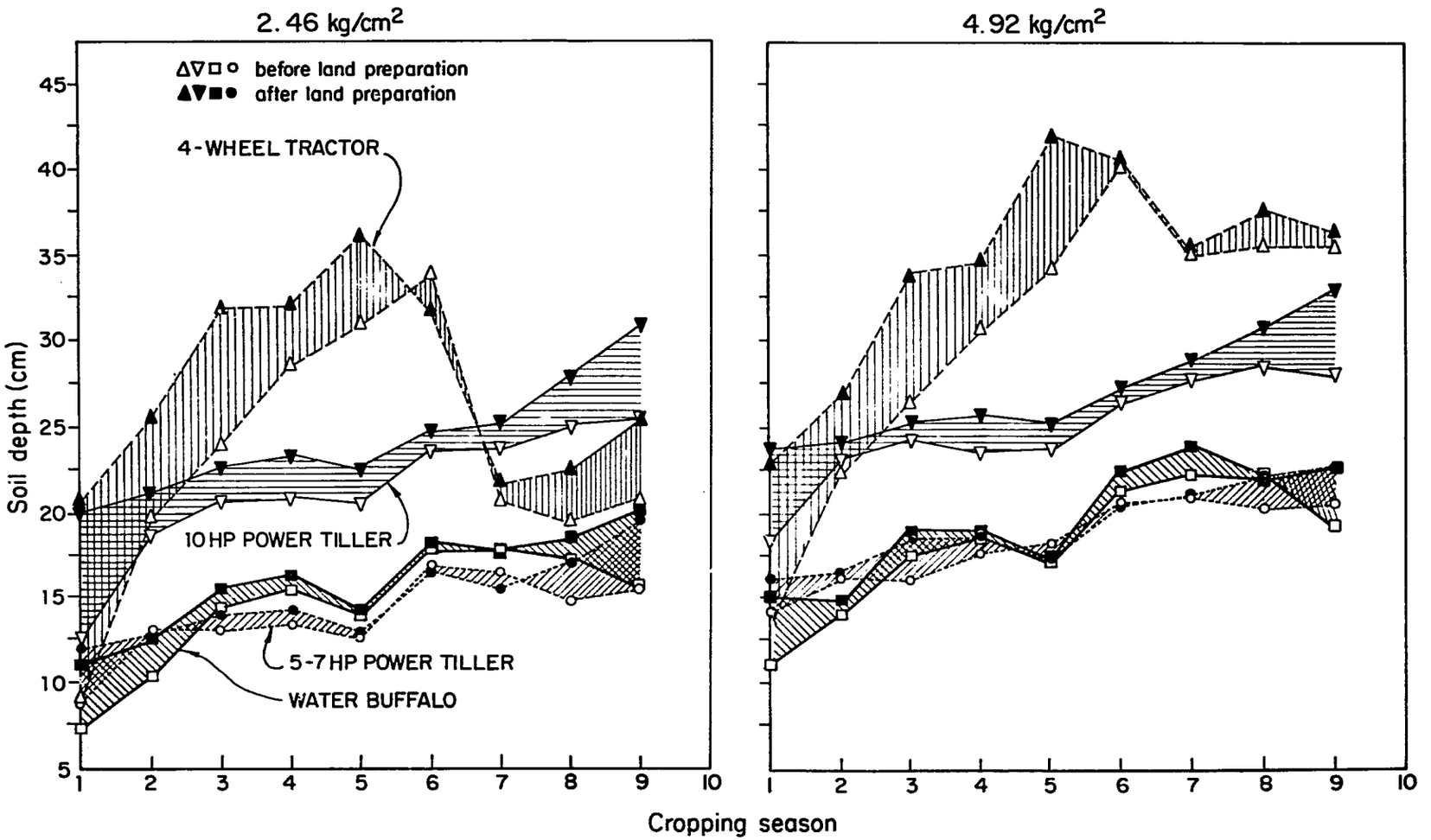

Fig.17. Compacted layer depth under different tillage systems.

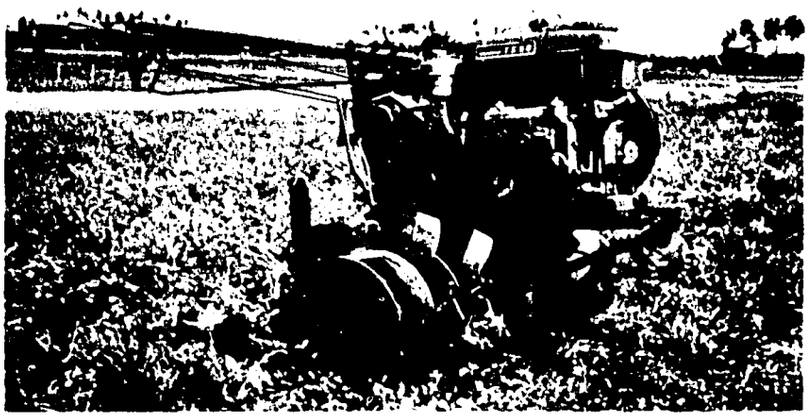

Fig. 18 Power tiller with axle-mounted rotary blades.

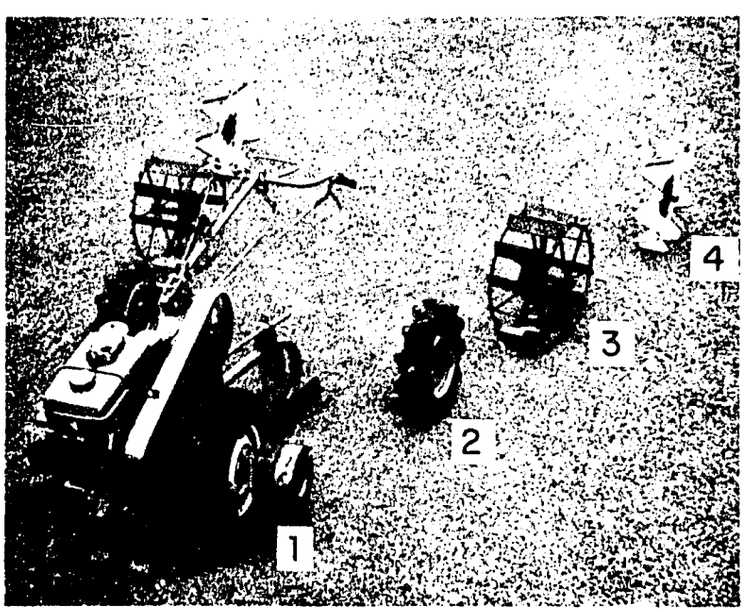

Fig. 19 Wheels used in drawbar tests.

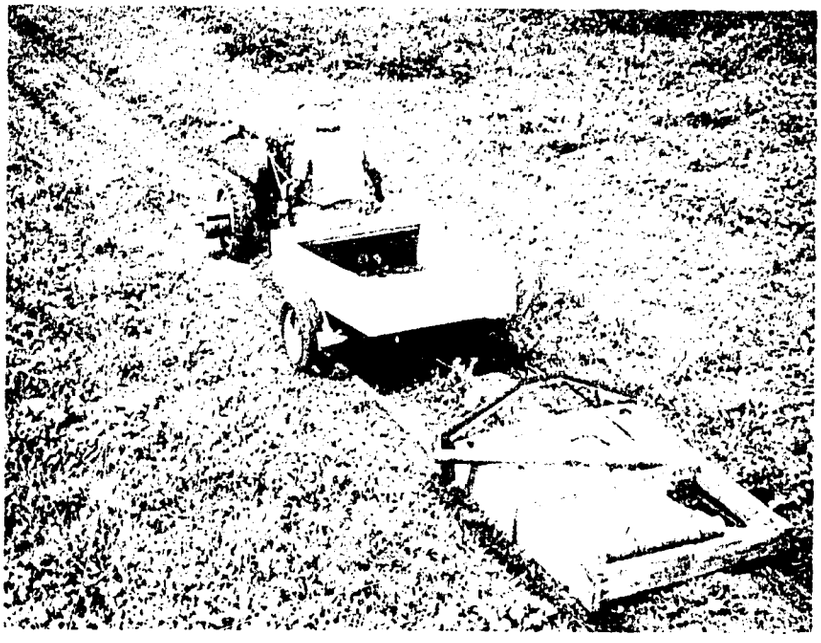

Fig. 20 Power tiller drawbar pull test.

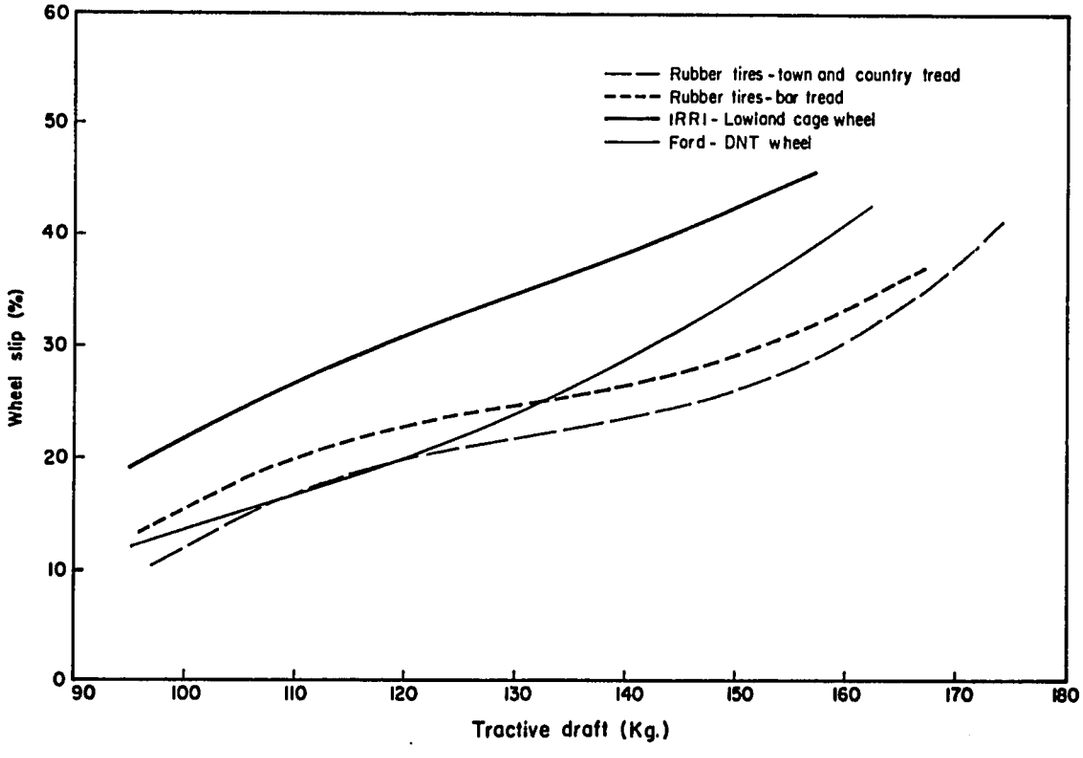

Fig.21 Results of traction test of IRRI - 6-8 hp power tiller

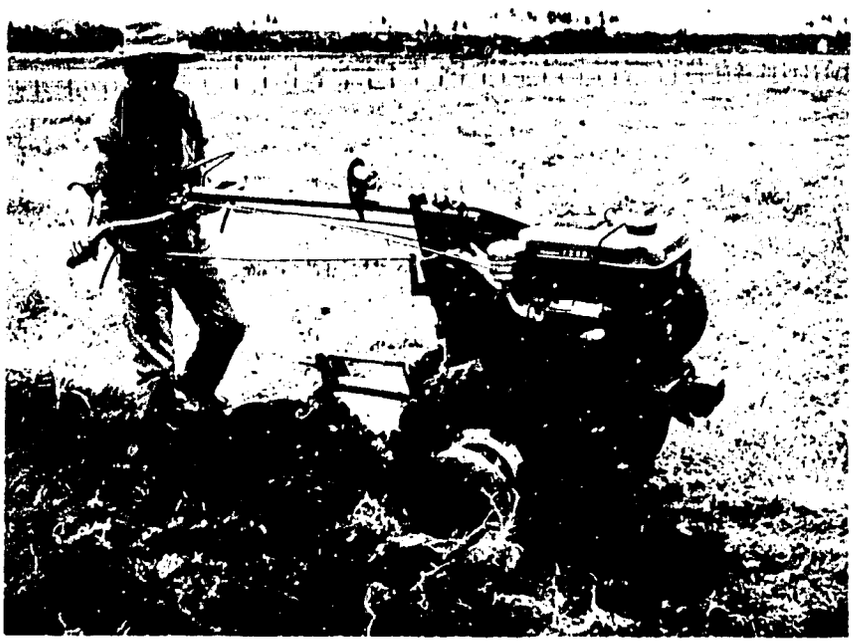

Fig. 22 Tiller moldboard plow tests.

MECHANIZATION SYSTEMS

IRRI-UPLB-BRBDP Rice Post-production Technology Project

Semiannual report No. 23 described the objectives of the post-production study, the methodology of the farm and mill level phases and the first farm trials conducted in the Bicol region of the Philippines.

Four alternate post-production systems were tested on each farmer-cooperator's plot. For each post-harvest operation, performance and efficiency measurements were taken and samples collected. The samples were analyzed at the National Grains Authority laboratory in Albay.

Harvesting loss was based on the quantity of grain recovered during the interval from harvesting up to stacking. The improved system incurred lower harvesting but higher stacking losses compared to the traditional system (table 7). These differences were partially a result of stack size. Under the traditional system, paddy is stacked in small bundles in the field while paddy intended for mechanical threshing is immediately hauled and stacked in larger bundles along the levees or roadside to facilitate access to the thresher. This practice is especially prevalent during the wet season harvest when the field is soft and muddy making it impossible for the thresher to negotiate the field.

Data from the Central Luzon trials show that grain losses from manual threshing were three times (3x) greater than for those systems using the mechanical thresher. The results from Bicol gave a different pattern because manual threshing was performed on a cement threshing floor. All grain recovered after the threshing operation was considered part of the threshing yield. Moreover, traditional threshing in Bicol is a combination of treading and use of flail or stick. The threshing operation is somewhat more complete compared to the "hampasan" method (beating paddy against a threshing frame) practiced in Central Luzon.

A farm survey was completed in one village during the reporting period. The survey collected information on production and post-production practices, production and disposal data, government policies and programs and other related information affecting the farmers' practices.

A second farm field trial was implemented in San Jose, Camarines Sur in February. The same operational procedures used in the first pilot area were employed. Five cooperators with a total of 58 plots participated. These generated 623 paddy samples. No equipment was purchased (i.e., axial flow thresher and the twin-bed batch dryer) as the cooperators wanted field production machines before buying drying equipment. Paddy generated from Systems I (traditional methods) and IV (improved methods) was bought from the farmer cooperators at the prevailing price to avoid problems caused by delay. The field trial was concluded by the end of March but the associated survey was not implemented immediately.

Buhi, Camarines Sur was the third pilot trial area. An axial flow thresher and mechanical dryer were delivered to the area and tested by IRRI engineers before implementation of the experiment. The 39 plots of the four

cooperators generated 359 paddy samples. Field trials were completed by the second week of May.

The last dry season field trial was conducted in Libon, Albay which was a replication of the wet season trial in November-December 1976. The same four alternative post-production systems were applied on the 32 plots of five farmer cooperators. All operations were completed by the end of June and all paddy samples were brought to the NGA laboratory for analysis. Additional survey work is underway to develop a profile of farm level practices.

During the January to June period, technical assessment of the rubber-roll single pass, rubber roll-steel huller combination, stone disc-steel huller combination, steel huller-steel huller combination, steel huller, and cono rice milling systems was completed for both wet and dry season harvests. The methodology for these assessments was outlined in Report No. 23. Although the samples from the tests have not yet been analyzed, data on milling recoveries provide information on the milling potential of these rice mills. (See Table 8 for preliminary results).

During the same period, a survey of steel huller and cono mills was completed. Thirty-five steel hullers and nine cono mills were surveyed. One hundred thirty-two mill users and non-users were also interviewed. Paddy and milled rice samples were collected.

Monitoring of the rice mills in the assessment study began in February. Millers were asked to keep daily records on drying, storage/warehousing and milling operations. Of the 14 mills included in the monitoring, the multi-pass rubber roll mill and the IRRI designed steel huller were not monitored because the former had temporarily stopped operations and the latter is an experimental unit and was not operating on a commercial scale. Samples were collected twice a month from each mill.

Farm level commercial milling tests in San Jose and Buhi in Camarines Sur and Libon in Albay were also conducted during this period. Paddy from Systems I and IV of the five cooperators in San Jose were processed in a village-type steel huller and cono mill located in the area. About 3,000 kg and 11,900 kg of paddy was milled in the steel huller and cono mills, respectively. In Buhi, four farmers participated in the field trials and generated 9,500 kg of paddy from Systems I and IV. Of this paddy, 3,610 kg was milled in a steel huller and 5,890 kg in a cono unit located in the area. Laboratory analysis for the samples collected from these tests has not yet been completed.

Monitoring and interview work is continuing.

Power Tiller Supply and Demand in the Philippines

The Philippine farm machinery industry has grown rapidly during the past five years (table 9). The number of firms involved in the production and distribution of farm equipment has also grown significantly.

The power tiller has been the most successful single piece of modern equipment adopted and used by Filipino farmers. While the exact impact of this machine on output remains unsolved, there is a clear indication that most farmers use the tiller efficiently and economically. While repayment of credit used to finance purchases has been a problem in some areas, the annual use and cost figures presented in this report indicate that farmers are able to meet their investment obligations when there is contract work available. Annual use generally exceeds the 8 to 12 hectares needed to recover fixed costs (fig. 23). Many farmers have used the power tiller as an additional source of income, a practice which may become less attractive as competition for the contract market increases.

Over sixty firms were serving the power tiller industry in 1976. Of these, over 30 were producing local designs. Capacity utilization in the industry is a function of both the availability of credit for the purchase of machines and the degree and location of competitive brands and models. Manufacturing has largely been concentrated in the Metro Manila area, but many small firms, principally in the Bicol region, are entering production. These smaller companies, despite higher material costs, are able to compete effectively through use of low cost, labor intensive manufacturing methods and simple designs. Unlike larger firms, most do not have extensive dealer or distribution networks but sell directly from their shops.

In general, the industry appears to have extensive underutilized capacity, although most companies maintain a diversified product line allowing use of production facilities for other items when the market for tillers is depressed. Few manufacturers have specialized in the production and marketing of power tillers alone. Most express concern about the availability of imported component parts such as bearings, seals, sprockets, chains and engines. Operating capital for material inventories and finished product stock levels is also a major impediment for many firms. These are, however, the complaints of an expanding industry in the process of transition and growth.

Competition has continued to maintain relatively stable machine prices at the farm level, although changes in the composition of demand have increased the price for some models (fig. 24). Many farmers are demanding machines with larger engines and additional features. Increased use of diesel engines adds to the initial investment requirements, but lowers operating costs (fig. 25). The longer life of the diesels makes them an attractive alternative to the gasoline powered units which currently compose the major share of the market.

Table 7. Grain loss incurred in harvesting and threshing operations, Central Luzon and Bicol Region, 1975-76.

Item	Harvesting[1]		Threshing[2]	Total
	Harvesting	Stacking		
	percent			
Central Luzon				
Traditional	3.16	0.12	6.82	10.10
Improved	2.14	0.14	2.07	4.35
Bicol[3]				
Traditional	3.75	[4]	0.93	4.68
Improved	2.03	1.85	2.18	6.06
Mean (ave. of 2 areas)				
Traditional	3.35	0.12	5.74	9.21
Improved	2.26	0.74	2.12	5.12

[1]Based on the amount of paddy recovered in the field immediately following harvest from 32 fields.

[2]Based on the quantity recovered by gleaners in the traditional system as reported by 10 farmers for 24 fields. For mechanical threshing, losses include blower loss and straw loss as reported by 13 farmers for 27 fields.

[3]Data was taken from results of completed field trials in Libon, Albay.

[4]No stacking loss was noted in the Bicol area because paddy was immediately threshed following harvest with no intermediate stacking operation.

Table 8. Preliminary results from commercial and laboratory milling tests for six alternative milling technologies in the Bicol River Basin Area, 1976.

Milling System	Actual Capacity (kgs/hr)	Commercial milling[a]				Laboratory milling			
		Milling recovery	Head rice	Broken rice	Brewer's rice	Milling recovery	Head rice	Broken rice	Brewer's rice
					p e r c e n t				
Rubber roll single pass	225	69.75	60.55	38.50	0.95	72.65	82.94	14.97	2.09
Rubber roll multipass	4200	69.43	77.71	21.94	0.35	71.33	80.00	17.25	2.75
Rubber roll-steel huller combination	300	68.47	59.05	40.50	0.45	71.31	86.07	11.50	2.43
Cono (ave.)[b]	630	68.36	74.55	24.61	0.84	70.90	80.22	17.37	2.41
a. Libmanan RM	800	71.10	72.91	26.17	0.82	73.10	84.35	14.00	1.65
b. Concina RM	600	69.90	72.32	26.45	1.32	71.12	79.44	18.16	2.40
c. Gonzales RM	900	67.88	78.45	21.03	0.42	70.06	80.46	16.69	2.85
d. Nazarrea RM	225	64.56	74.52	24.78	0.70	69.33	76.62	20.63	2.75
Stone disc-steel huller combination	444	65.56	53.68	43.63	2.69	68.80	80.00	17.67	2.33
Steel huller (ave.)[b]	380	64.50	29.18	68.86	2.06	72.29	81.19	16.45	2.36
a. Torres RM	585	66.70	26.60	67.37	2.41	72.11	83.19	14.79	2.02
b. Olaño RM	270	65.09	38.23	77.00	1.67	70.87	82.32	15.42	2.26
c. Dycoco RM	410	63.26	21.75	60.08	1.25	72.12	80.70	16.45	2.88
d. Ruta RM	240	62.93	30.12	70.99	2.47	74.06	78.56	19.13	2.31

[a] Tests for each milling system were replicated four times (4x).

[b] These are mills selected within the pilot areas of the farm level demonstration and applied research trials.

Table 9. Actual and projected annual sales in number of units for tractors and power tillers, Philippines, 1960-1980.

Year	Tractors		Power tillers	
	Actual sales	Sales trend and projection[a]	Actual sales	Sales trend and projection[a]
1960	-	-		
1961	813	878		
1962	994	854		
1963	863	859		
1964	950	888		
1965	607	936	1,505*	
1966	664	1,000	1,932	3,068
1967	1,531	1,074	3,058	1,839
1968	1,630	1,154	1,873	1,052
1969	1,358	1,237	910	711
1970	978	1,318	475	822
1971	1,086	1,392	680	1,389
1972	1,216	1,455	1,408	2,416
1973	1,517	1,502	3,120	3,908
1974	1,666	1,530	6,721	5,870
1975	2,176	1,535	11,077	8,306
1976	1,074	1,511	9,352	11,221
1977				14,619
1978				18,506
1979				22,885
1980				27,761

[a] Based on cubic regression, $Y = a + bx + cx^2 + dx^3$, where x = actual sales and Y = predicted sales. Period covered is 1961-76 for tractors and 1966-76 for power tillers.

*Estimated cumulative total of power tillers sold between 1960 and 1965.

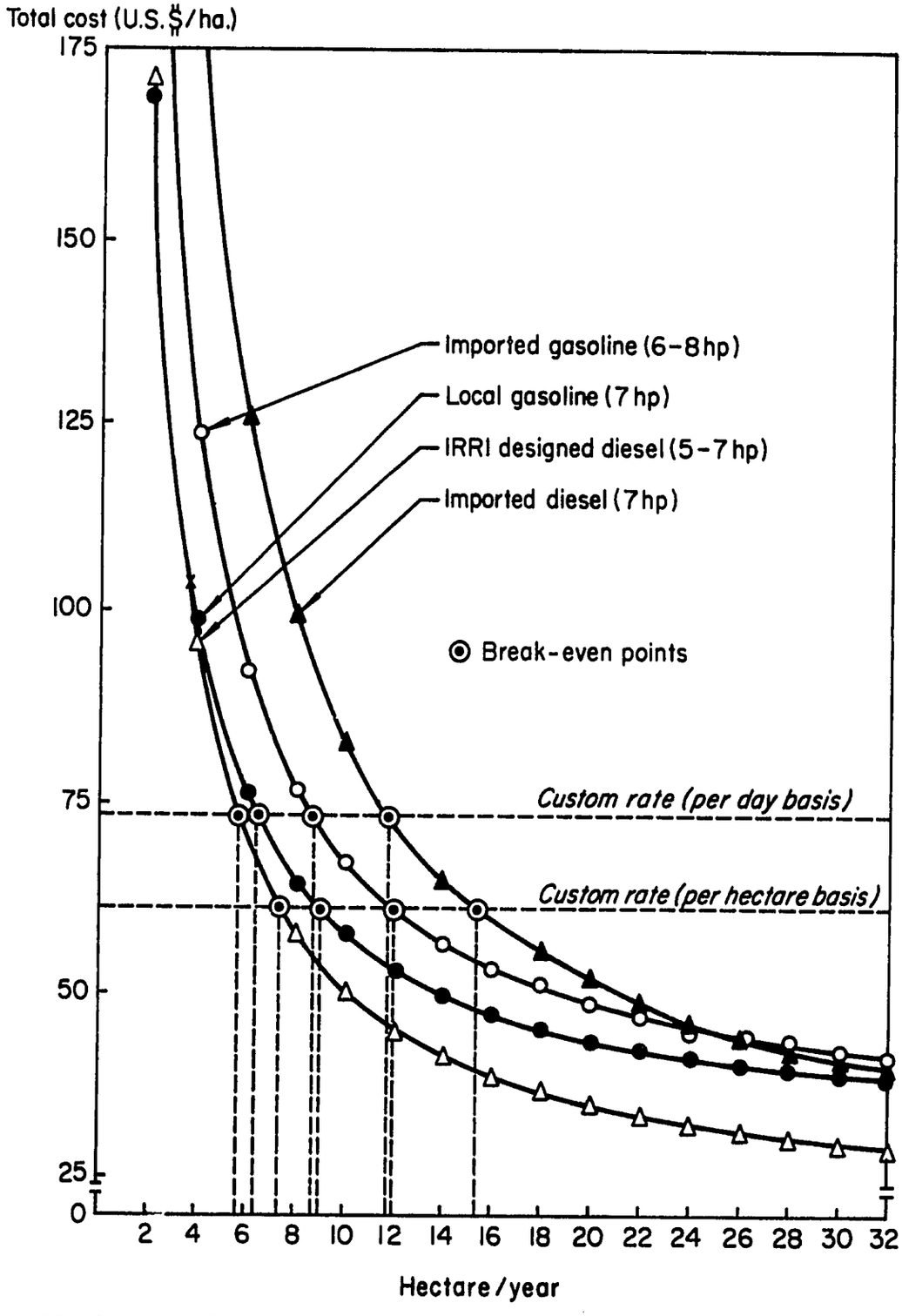

Fig. 23 Cost per hectare by area served per power tiller per year, Laguna Philippines.

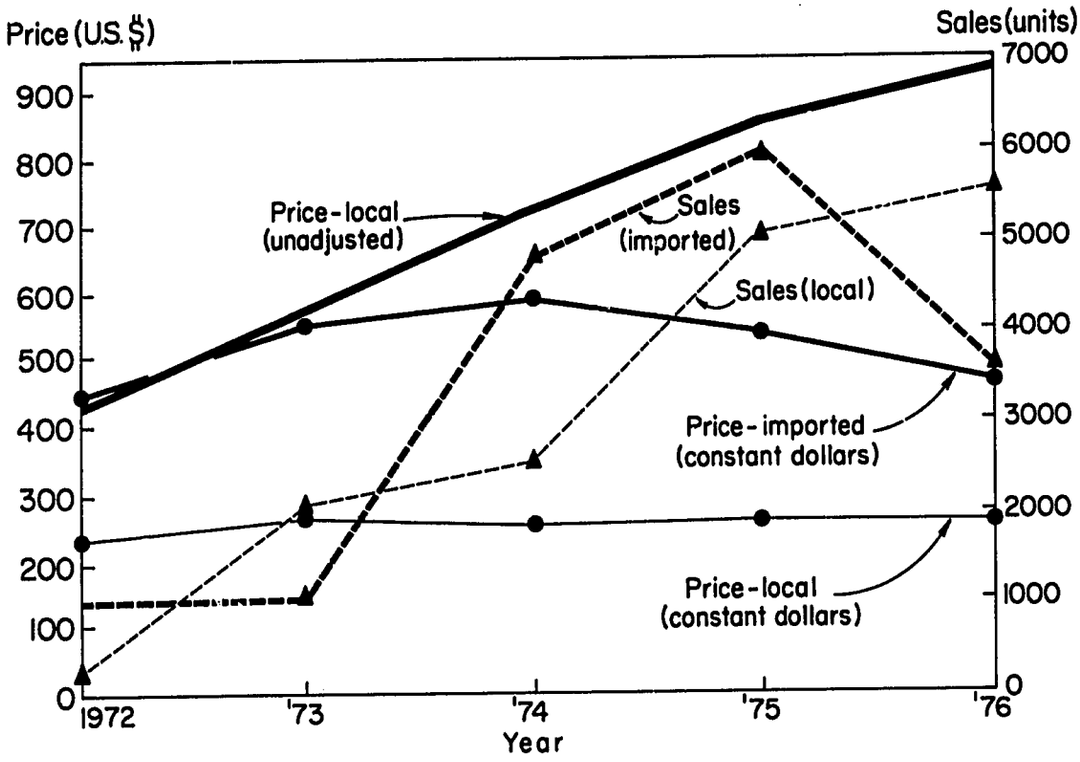

Fig. 24 Annual sales and price of power tillers, Philippines.

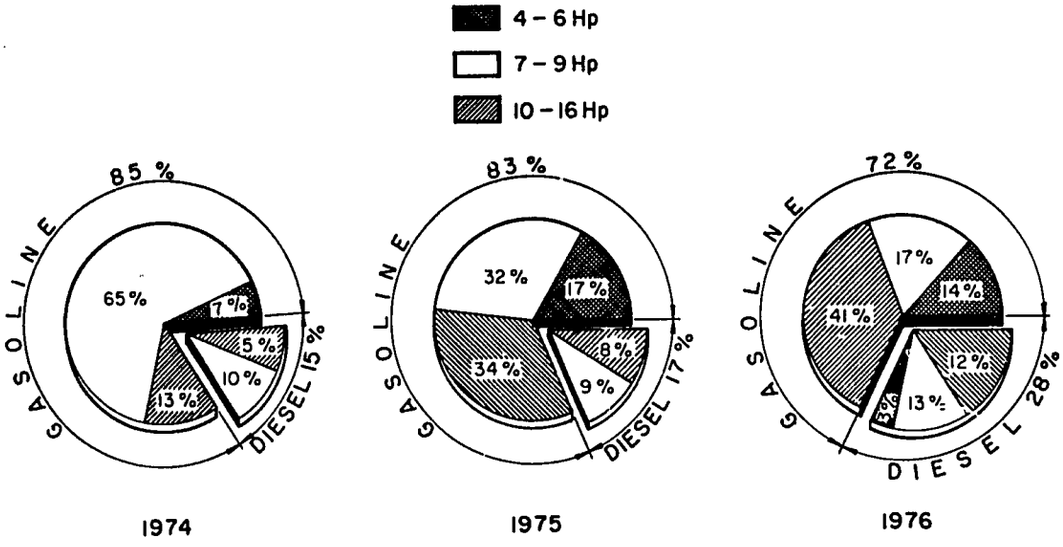

Fig. 25 Sales of power tiller by horsepower and fuel, Philippines, 1974-76. (Does not include Kubota sales of 5,000 units to DAR, 1974-75).

INDUSTRIAL EXTENSION

Introduction

The three USAID-sponsored industrial programs in Pakistan, Philippines, and Thailand were reviewed by their respective local USAID Missions. The review teams gave favorable reports on the progress of all three programs and offered many helpful suggestions for improving their effectiveness and focusing their activities on the needs of farmers in their region. Counterpart agencies and cooperating manufacturers took part in the reviews.

At the time this report was prepared complete information on the number of IRRI machines manufactured during the first half of 1977 was not available. However, based on preliminary information, it is apparent that production of the IRRI power tiller is below previous levels and production of threshers is on the increase. In previous years, the Philippines and Thailand have accounted for more than 80% of the IRRI power tillers manufactured. The scarcity of farm credit combined with large manufacturers' inventories has caused manufacturers in both countries to curtail power tiller production during this reporting period. Although these factors also influence thresher production, thresher manufacturers in both countries produced about twice as many units during this reporting period as during the first 6 months of 1976. About one-half of the threshers manufactured in the Philippines were the portable type which makes the market potential of this new design look very promising. Several Pakistan manufacturers have begun producing IRRI threshers.

Feedback from manufacturers in India, Pakistan, Philippines, and Thailand indicate considerable interest in the new 6-8 hp tiller. It may be a while before production figures reflect the demand for this new design due to limited credit availability and the conservative approach being taken by cooperating manufacturers.

The fourth and fifth issues of the IRRI Farm Machinery Development Program Newsletter were published and distributed during this reporting period. The newsletter's mailing list continues to grow. There were 562 names on it when the fourth newsletter was mailed and over 600 names when the fifth newsletter was distributed. In addition to the newsletters sent directly from IRRI, several hundred copies are being distributed by the industrial extension offices in Pakistan and Thailand and by USAID in Washington, D. C.

Two new industrial extension subcontracts were established, bringing the total number of subcontract programs to nine. One is in Colombia, South America with Asistencia Tecnica a la Industria, and the other is in Nepal with HMG Department of Agriculture (table 10).

Technical Consultancy and Manufacturing Cost Reduction Project

In addition to the four manufacturers assisted earlier, five cooperating manufacturers outside the Manila area were visited during this period and given technical assistance in production management and cost reduction. Three manufacturers are located on Luzon Island in Bulacan, Nueva Ecija and Camarines Sur

Provinces, and two manufacturers are located in the Visayas region.

A follow-up survey of firms receiving assistance in the Manila area was conducted to assess the value of the technical consultancy program and to provide additional assistance, if needed. Table 11 shows the comparative analysis of one company's manufacturing costs before and after receiving IRRI's assistance. Although the company was able to reduce some of its costs, total cost of production has changed little because of increased overhead costs due to the increased level of management and higher wage rates prevailing at the time of the second survey.

Two other Manila area companies did not have detailed cost records for an exact comparison, but their estimated man-hour requirements ran 100 - 200 percent above IRRI's cost estimates before receiving assistance. Table 12 shows a significant improvement in labor efficiency which presumably resulted from method improvements adopted at the suggestion of the IRRI industrial engineer.

Three manufacturers in the Philippines were given assistance in developing appropriate shop layouts and in selecting tools and equipment. The information developed was also used by the IRRI-PAK Industrial Extension Project to assist manufacturers in Pakistan.

Skill development is included in the services offered to cooperators. This is aimed at alleviating the scarcity of personnel with the technical expertise needed to efficiently operate a plant. This part of the program is limited to the cooperator's production personnel who are directly involved in the implementation of recommendations from IRRI. Preparation of a training manual on skill development for manufacturing methods improvement and cost reduction techniques is underway. The training manual is scheduled for release to cooperating manufacturers early in 1978.

Cost estimates of five additional IRRI-designed machines were added to those reported previously (table 13). These estimates, supplemented by a bill of material, are made available to cooperating manufacturers to help them arrive at a realistic estimate of their manufacturing expenses.

A substantial cost savings was effected in the portable thresher by adopting alternate material specifications for the concave and some sheet metal parts.

Grain Dryer Value Analysis

Value analysis of the batch dryer reported in Semiannual Report No. 23 continued during this reporting period and resulted in a simplified blower-burner assembly and grain bin of 2-ton capacity (fig. 26). The completed prototype is now undergoing final testing.

The blower used in most flat-bed dryers is a vaneaxial type. The fan and stationary blades are housed in a cylinder with the fan driven on the suction side of the blower. The new blower is a tube-axial type with the blower and burner assemblies in a single cylinder. The fan is driven in front of the housing, therefore, the belt is no longer exposed to heated air as in the previous design. The diameter of the blower fan was increased from 46 cm

to 53 cm to provide sufficient air for the larger capacity bin.

A preliminary test of the prototype blower built by one manufacturer showed a very poor performance because of manufacturing errors. Low airflow and back flow of air was observed. The blades were modified by adding a metal strip at the tip to reduce the blade-cylinder clearance and the hub was strengthened to prevent deformation during operation which caused the blade to touch the housing. Test results of the blower assembly showed that the airflow was still below the required 100 m^3/min with a 45.7 cm grain bed depth. The observed airflow at 30 mm WG static pressure was 76 and 59 m^3/min at 2150 and 2000 rpm, respectively.

It was hypothesized that the poor performance was due to insufficient fan blade width. A 1.3 cm wide metal strip was added on both sides of all blades to increase the blade width by 2.6 cm. Test results showed that the performance was still poor. An airflow of about 37, 51, and 62 m^3/min was observed when the fan speed was 1600, 2000, and 2250 rpm, respectively, at 30 mm WG static pressure.

The added metal strip on both sides of the blade was removed and the blade tip was straightened from the center axis to the tail end side to remove drag during operation (fig. 27). This blower-burner assembly satisfied the requirement for the two-ton batch dryer. The airflow at 30 mm WG static pressure was 105 m^3/min at 2000 rpm and the power input was about 2.3 KW when moving air of 42°C.

A gravity-flow, pot-type kerosene burner is widely used in batch dryers. It normally has three components: the bowl, where the fuel flows and spreads on the surface and where air for combustion enters; the baffle, which when heated provides the heat of combustion; and the cover, which directs the flame and prevents the baffle from cooling.

The existing pot burner (fig. 28) of the IRRI batch dryer was modified and tested in the new blower-burner assembly to determine the conditions for efficient combustion. Initial tests were made with 33 cm grain depth in the bin. Succeeding tests were made with the blower-burner assembly coupled to a test duct that simulated the dryer system conditions. Burner modifications included a preheating coil of copper tubing in the pot burner and raising and inverting the baffle of the burner to improve fuel combustion.

Results of the tests indicated that the existing kerosene pot burner in the IRRI batch dryer could be improved to increase efficiency. A 45% reduction of kerosene consumption was attained by raising or inverting the pot burner baffle 45 mm although the yellowish flame characteristic was still present. Raising the cover and baffle of the pot burner relocated the baffle to the hotter position of the flame making it red hot during operation and providing additional combustion of unburned gas fumes. The former design has no provision for raising the baffle to 45 mm, so a new burner was developed. The two-piece modified burner has the baffle and cover combined to sit on the bowl (fig. 29). This arrangement makes cleaning the baffle easier. In the old type, the whole burner had to be removed from the housing for cleaning. Although reduced fuel consumption was obtained by the preheated tube coil around the tap cover, a cyclic increase and reduction of the flame size occurred which

caused variation in air temperature.

Results of tests using diesel fuel show promise because of the low fuel consumption observed (higher heating value) and lower cost. Incomplete combustion was indicated by the yellowish flame, fuel odor of the heated air, and a slight overflow on the pot burner meaning low pot and preheater temperature.

Close examination of the behavior of the flame during operation revealed that the burner housing is larger than needed. The flame did not touch the top portion as it is constantly being pulled toward the blower. The housing size was reduced and perforated holes were added in front for the passage of secondary combustion air. The top cover of the housing was extended 15 cm to shield the blower shaft. A covered window provided easy removal of the top portion of the burner to clean the baffle. The reduced size of the housing increased the effective area of the blower.

Current dryer owners report serious maintenance problems with the perforated floor of the grain bin. The operator steps on the floor during grain unloading, so care must be exercised not to damage the unsupported portions of the floor. The floor costs about 45% of the entire bin so a new bin was developed to eliminate that component. The bin has two vertical grain columns on each side of a central plenum chamber. Heated air enters the plenum chamber and diffuses through the louvered side panels of the grain compartments and passes through the grain layers. The saturated air goes out through the louvered outside panels of the bin.

The front, back panels, and floor panels of the bin are made of wooden frames covered with plywood. The panels and louvered sides are bolted together and can be easily dismantled for transport. Grain can be loaded through the open top of the bin or through an opening created by removing some of the slats at the middle of the side panel. Unloading is accomplished with the use of a portable chute with bagging hooks which is inserted into one of the slats (fig. 30). Succeeding slats are removed to let the grain flow out. When the grain level drops below bagging height, the bottom slats are removed and the grain is shoveled into the bag.

Farmers do not like to have their grain mixed with that from other farmers so a fixed vertical partition was added at the center of each compartment to make four separate bins thus, four farmers can dry grain simultaneously.

The bin can also be used when partially full. Sliding panels are inserted on railings on the inside louvered panels of the grain compartments. The panels cover the top louvers next to the plenum chamber to a point below the grain level.

In addition to performance improvements and reduced operating costs, major cost savings were realized from this project so the dryer will now be more acceptable to many low income farmers.

Cost estimates show that the new burner/blower assembly will cost about 25% less than the previous IRRI design and that the complete dryer system will cost about 45% less (on a per ton of capacity basis) than the previous IRRI design.

Industrial Extension in the Philippines

Industrial liaison continued during this reporting period. Companies in Metro Manila area were visited seven times and one trip was made to the Bicol region to visit manufacturers there. Ten companies were given technical assistance in the fabrication of the portable thresher. Most of these manufacturers have submitted prototypes for testing. Suggestions to improve their prototypes and advice on matters pertaining to the manufacture of the thresher were given.

Five cooperating companies in Metro Manila area and one manufacturer in Davao have expressed interest in producing the new power tiller, and drawings were released to these companies for fabrication of prototypes. At the end of this reporting period, one manufacturer had completed a prototype and it was tested at IRRI.

The industrial extension staff provided assistance during the department's two-week engineering course. A tour of cooperating manufacturers' plants in the Metro Manila area was organized to familiarize the trainees with production methods and techniques used to manufacture IRRI machines. Other parts of the training program were also handled by project staff.

Presentations were made on Small Scale and Appropriate Farm Mechanization at the Second Seminar-Workshop on Project Development and Planning for the Department of Agrarian Reforms' (DAR) Regional Planning and Project Development staff. The seminar/workshop provided a good occasion to disseminate information about the IRRI program as the participants are government employees directly involved in farm mechanization project planning and development and are assigned in several regions of the country.

The Philippine government has a new program to promote the production of feed grain. To assist this effort, industrial extension project staff participated in the sorghum thresher development project described in the Design and Development section of this report.

Industrial Extension in Thailand

The addition of a draftsman brought the total number of IRRI project employees to five (table 14). Mr. Chalermchai Suksri, a Thai Division of Engineering engineer, is attached to the project full time and works on project-related activities. Other members of Thai Engineering Department cooperate and help the project when items of particular interest to them are active. Similarly, the project staff give assistance to the Agricultural Engineering Division in varied ways, and not necessarily restricted to activities involving IRRI machinery. This exchange is given readily and willingly by each party with a net benefit to all concerned.

During the period February 10 to March 29, 1977, a Georgia Institute of Technology consultant, Mr. Ben E. James, assisted the project. During that period he visited Nepal and Bangladesh to assist the new subcontract programs there. While in Thailand he completed the compilation of data obtained from a survey of Thai dealers who are importing and selling engines under 20 hp.

A final report of the survey of the IRRI axial flow thresher's efficiency compared to traditional threshing methods used in Thailand was completed in February. The study was conducted by the Agri-business Management Program at Kasetsart University in Bangkok and was co-sponsored by the Thai-IRRI Industrial Extension Project and Engineering Experiment Station, Georgia Institute of Technology.

Through the assistance of the International Agricultural Development Services (IADS), a subcontract was established in Nepal with the Department of Agriculture in May. Also, the FAO office in Kathmandu has continued to help promote the manufacture of IRRI design machines in Nepal.

Extensive travel took place to locate potential manufacturers, demonstrate machines to farmers and manufacturers, and assist cooperating manufacturers. To aid these efforts, two batch dryers and one power tiller with steering clutches were ordered from cooperating manufacturers. Eight additional Thai manufacturers signed agreements with IRRI during this reporting period bringing the total number of cooperating manufacturers to 19.

Tests indicate that the original IRRI axial flow thresher design can not always produce clean paddy when threshing some widely grown traditional Thai varieties. The IRRI thresher can remove the paddy from the straw but it encounters difficulty in separating the small thin panicle pieces (pedicel) from the grain. Project staff working in cooperation with manufacturers have tried several devices to overcome this problem, such as raspbars on part of the cylinder in place of pegteeth, modified arrangements of concave and pegteeth, additional stripper teeth, and various auxiliary devices such as special arrangements of augers and bucket elevators. The project staff developed and briefly tested a deawning device which shows promise and continuing development work is planned on this device during the next threshing season.

The production of the IRRI axial-flow thresher remained nearly constant and production of the power tiller declined during this period. Seasonal effects and external factors affecting the farm machinery industry in Thailand explain the reduced manufacturing activity. A number of farm machinery manufacturers have copied the IRRI designed thresher from IRRI cooperating manufacturers and in the absence of a formal working relationship with them, it is difficult to assess their contribution to the total number of machines manufactured in Thailand. The favorable response to the new IRRI power tiller and the normally higher demand for threshers during the second half of the year make the outlook for increased production of IRRI machines in Thailand appear good.

Industrial Extension in Pakistan

The farmer survey reported earlier was completed in the major rice growing areas of Pakistan with the assistance of Mr. Nelson Wall, a consultant from the Georgia Institute of Technology. Most of the 200 farmers surveyed experience seasonal shortages of labor for harvesting rice and wheat. Farmers with more than 10 ha also experience shortages of hired labor for paddy transplanting. The financial position of the medium and large irrigated farmers in Punjab and

and Sind does not appear to limit the introduction of new machines. Farmers in most size categories indicated a strong desire to acquire IRRI machines, with 82% indicating a desire to acquire the multi-crop thresher. Nearly 50% of the medium and large farmers expressed a need for transplanters. Thirty seven percent of the small and medium size farmers indicated a strong interest in the IRRI power tiller. Interest in mechanized fertilizer application and weeding is still limited. More farm studies are underway to gain a better understanding of the economics of using threshers and transplanters and to develop design specifications for new machines.

Engineering drawings of the 6-8 hp power tiller were given to three companies in Pakistan, and one completed a prototype. It is now being evaluated by the program staff prior to commercial production.

There is substantial interest in rice transplanters in Pakistan. The Government of Pakistan has imported powered transplanters from the Peoples Republic of Korea, and the Peoples Republic of China. These are being evaluated by the Provincial Agricultural Engineering Departments. The IRRI-PAK Program tested the Korean transplanter with seedlings raised by the semi-dry method for 30-40 days which seem to be better suited for this machine (fig. 31). Paddy fields must be fairly level and thoroughly puddled with the soil particles well settled before transplanting. Water depth should be 2-3 cm. A 3-man crew can transplant 1.0 to 1.2 ha in 8 hours. The average missing and improperly planted hills was 18%. The average number of plants per hill was 2.5.

The IRRI-PAK Program is focusing some attention on introducing manual and bullock-powered transplanters. Two units of a manual rice transplanter were imported from the Philippines (fig. 32) and these were loaned to three local manufacturers which have fabricated a total of 16 prototypes. One unit was tested at the Rice Research Institute, Kala Shah Kaku, Lahore. The results indicated an average of 2 plants per hill with 5.8% missing hills. The machine can transplant .4 - .6 ha in 8 hours of operation. Two men are necessary to operate the machine, one for operating the transplanter and the other for preparing seedlings.

Technical and financial assistance has also been provided to a manufacturer in the development of a seven-row, animal-drawn paddy transplanter. Most of the testing and evaluation of transplanters is being done by the program staff in cooperation with the Rice Research Institute, Kala Shah Kaku, Lahore.

The standard IRRI axial flow thresher was modified for use with the tall traditional varieties during the 1976 paddy harvesting season. This thresher was also tested during the 1977 wheat threshing season with modifications incorporated to make it suitable for threshing wheat. The threshing drum speed was increased from 550 rpm to 700 rpm, a series of knives were installed on the threshing drum and the concave for making bhoosa, a full-length, perforated screen was added to the oscillating grain tray to improve separation, and an aspiration system was added to remove light impurities from the threshed grain. These modifications enable the machine to thresh most of the popular paddy and wheat varities in Pakistan. With a three-man crew, it has a threshing output of 0.7 t/h in dwarf paddy varieties, 0.5 t/h in tall Basmati vari-

eties, and 0.44 t/h in wheat. The average total grain loss during the tests was 0.38%.

One company has started selling the IRRI thresher for wheat threshing and six other companies have fabricated prototypes. The modifications described above are being incorporated in the prototype machines. The thresher is expected to be marketed during the next rice harvesting season at a selling price of $950 without engine. A 7 hp diesel engine, costing about $850, or a 5 hp electric motor can be used to power this thresher.

The IRRI portable thresher was tried in Pakistan but its performance with tall traditional paddy varieties was not satisfactory. The design was modified with the addition of straw cutting knives, oscillating screen, and winnowing and aspirating attachments. The modified machine was tested on wheat during the last harvesting season. The machine is fairly light weight and is mounted on two wheels for easy transport. The machine has a threshing output of 130 kg/h of wheat and 260 kg/h of paddy with a 2-man crew. It can be powered by a 5 hp kerosene or 3 hp diesel engine. The design is being released to interested manufacturers and will sell for about US$500 without engine, and US$650 with kerosene engine.

The axial-flow and portable threshers were demonstrated at many locations in the country including the On-Farm Water Management Project, Millet Tractors Lahore, Rice Research Institute, Kala Shah Kaku, and the Agricultural University, Lyallpur. Demonstrations were also held in many farming areas and for agricultural machinery manufacturers to solicit the comments of farmers and manufacturers.

Twenty root-zone liquid applicators were fabricated by a local firm in Rawalpindi and were distributed to various organizations in the country for field testing and evaluation.

Two project staff engineers travelled from Karachi to Rawalpindi and contacted major manufacturing firms of agricultural machinery in Hyderabad, Sukkur, Multan, Mian Chunnu, Lyallpur, Lahore, Daska and Gujrat to explain the IRRI-PAK Agricultural Machinery Program and to introduce the IRRI machinery designs.

Table 10. Industrial Extension Subcontract Program Officers.

Dr. K. M. Badruddoza
Executive Vice-Chairman
Bangladesh Agricultural
Research Council
130-C Road 1, Dhanmandi
Dacca-5, Bangladesh

Ing. Rolf Kaeser
Mechanical Engineer
Asistencia Tecnica
a la Industria
Apartado Aereo 8053
Cali, Colombia

Dr. K. N. Singh, Head
Agricultural Engineering
Department
G. B. Pant University of
Agriculture & Technology
Pantnagar, Distt. Nainital
Uttar Pradesh, India

Mr. M. M. Suri
President
Suri Research Foundation
B-14 Greater Kailash
New Delhi - 48
India

Mr. R. Dadang Tarmana
Project Director
Directorate of Food Crops
Production
Department of Agriculture
Pasar Minggu, Jakarta
Indonesia

Dr. Sung Kum Han
Director
Institute of Agricultural
Engineering & Utilization
Office of Rural Development
Suwon, Korea

Dr. M. Hashim Noor
Assistant Director
Malaysian Agricultural Research
and Development Institute
P. O. Box 208, Sungai Besi
Serdang, Selangor, Malaysia

Mr. B. B. Khadka
Director General
HMG Department of Agriculture
HMG of Nepal, Kathmandu
Nepal

Mr. S. Kathirkamathamby
Superintending Engineer
Engineering Research and
Development Division
Department of Agriculture
Peradeniya, Sri Lanka

Table 11. Comparative analysis of manufacturing costs.

ITEMS	POWER TILLER			AXIAL FLOW THRESHER			PORTABLE THRESHER		
	1st Survey[1]	2nd Survey[2]	Cost Est.*	1st Survey	2nd Survey	Cost Est.*	1st Survey	2nd Survey	Cost Est.*
				(U.S. Dollars)					
Direct Labor Cost	73.73	62.75	27.59	127.26	140.89	66.19		35.90	18.43
Manufacturing Overhead Cost	113.50	97.17	41.25	192.98	376.79	99.28		69.64	27.64
Total DL & OH Cost	187.23	159.92	68.84	320.24	517.68	165.47		105.54	46.07
Material Cost[3]	376.52	422.40	295.69	656.55	534.41	494.68		173.28	130.81
Total Manufacturing Cost	563.75	582.32	364.53	976.79	1,052.09	660.15		278.82	176.88
Direct Labor Hours Used	308.00	195.26	102.21	520.00	532.00	245.22		135.00	68.27
Ave. Hourly Wage Rate	0.24	0.32	0.27	0.25	0.26	0.27		0.27	0.27
Overhead Charge Rate/DLH	0.37	0.50	0.40	0.37	0.71	0.40		0.52	0.40
% Increase (Decrease)[4] in									
Labor Hours Used		(37%)			2%				
Material Cost		12%**			(19%)				
Ave. Hourly Wage Rate		34%			6%				
OH Charge Rate		35%			91%				

[1]Conducted on April 27, 1976.

[2]Conducted on February 11, 1977.

[3]Engine cost included in power tiller and axial flow thresher on IRRI cost estimates.

[4]1st survey vs. 2nd survey (actual).

* IRRI Cost Estimates.

** Increase due to changing from gasoline to diesel engine.

Table 12. Comparative fabrication man-hours of IRRI-designed machines (actual vs. estimates)

Machines	Man-hours per unit		% Difference
	Actual[1]	IRRI est.	Over (under) the est.
COMPANY B			
Multihopper seeder	36.15	29.88	20%
COMPANY C[2]			
5-7 hp power tiller	115.00	102.21	11%
Axial flow thresher	273.00	245.22	13%
Portable thresher	110.00	68.27	61%[3]

[1]Figures obtained on June 27, 1977.

[2]Increased its manpower efficiency from an average of 40% to 85%. Total manpower enrollment was reduced correspondingly by almost one-half.

[3]High % difference accounts for the learning period of workers on the first few pieces fabricated.

Table 13. Estimated cost breakdown for IRRI-designed machines.

Machine	Direct Labor Cost (a) (1)	Mfg. Overhead Cost (b) (2)	Total DL & OH Cost (c) (3) = (1)+(2)	Material Cost Fabricated (4)	Material Cost Purchased (d) (5)	Total Material Cost (6) = (4)+(5)	Total Manufacturing Cost (7) = (3)+(6)
			(U. S. Dollars)				
Axial Flow Thresher with Rotary Screen	76.87	115.30	192.17	242.40	200.74	443.14	635.31
Axial Flow Thresher with Oscillating Tray	66.19	99.28	165.47	184.40	168.72	353.12	518.59
Portable Thresher	19.04	28.57	47.61	68.94	54.83	123.77	171.38
One-ton Batch Dryer	22.85	34.28	57.13	166.17	64.09	230.26	287.39
Grain Cleaner	36.09	54.14	90.23	60.30	99.60	159.90	250.12
5-7 Hp Power Tiller	27.59	41.38	68.97	37.53	116.47	154.00	222.97
Diaphragm Pump	5.13	7.69	12.82	20.40	3.29	23.69	36.51
Liquid Injector	1.34	2.00	3.34	3.33	3.81	7.14	10.48
Rice Hull Furnace	6.92	10.38	17.30	84.45	3.49	87.94	105.24
Multi-hopper Row Seeder	8.06	12.10	20.16	15.30	3.82	19.12	39.28
Savonious Windmill and Piston Pump	13.27	19.90	33.17	186.39	136.93	323.33	356.50
Portable Grain Cleaner	8.61	12.92	21.53	46.98	23.81	70.79	92.32
6-8 Hp Power Tiller with Steering Clutches	13.12	19.68	32.80	64.66	79.47	144.13	176.93

(a) US$0.27/man-hour (b) US$0.40/man-hour (c) Direct labor and overhead cost (d) Excluding engine cost

Table 14. Industrial Extension Project Staff.

Name	Position
Philippines	
John A. McMennamy	Industrial Liaison Engineer
Simeon Gutierrez	Senior Research Assistant
Nemelito Langam	Senior Research Assistant
Rodulfo Angco	Draftsman
Enrique Macatangay	Shop Assistant
Estrella Castro	Secretary
Thailand	
P. Stewart Barton	Industrial Extension Engineer
Suwit Bunyawanichkul	Research Assistant
Chalit Choensombat	Technician
Vacharachai Pumarin	Draftsman
Juthaporn Charoenpravat	Secretary
Pakistan	
Amir U. Khan	Industrial Extension Engineer
Hamid Ayub	Research Assistant
Mohammad Ilyas	Research Assistant
Ghulam Sarwar	Research Aide
M. S. Malik	Administrative Assistant
Rana Saeed	Office Assistant
Mohammad Jamil	Shop Supervisor
Zahoor Ahmed	Bench Mechanic
K. D. Awan	Secretary

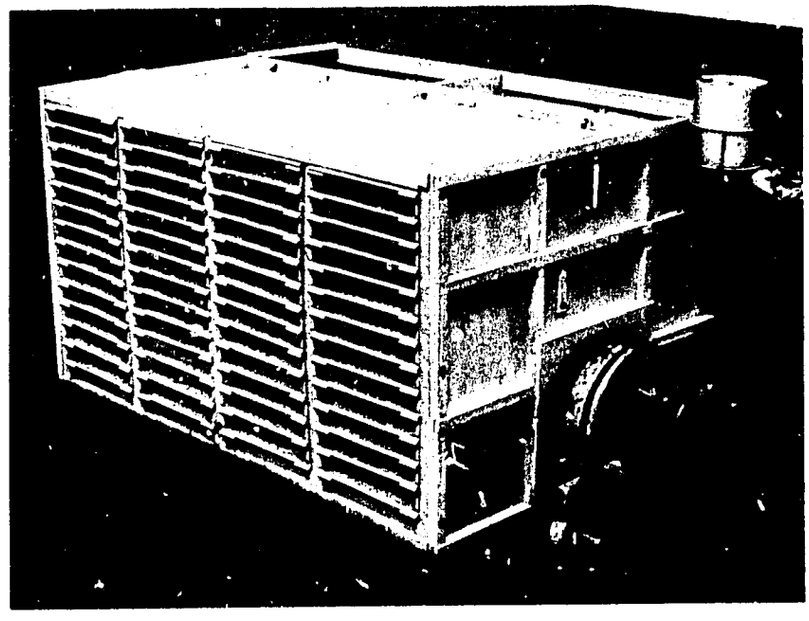

Fig. 26 2-ton vertical bed dryer.

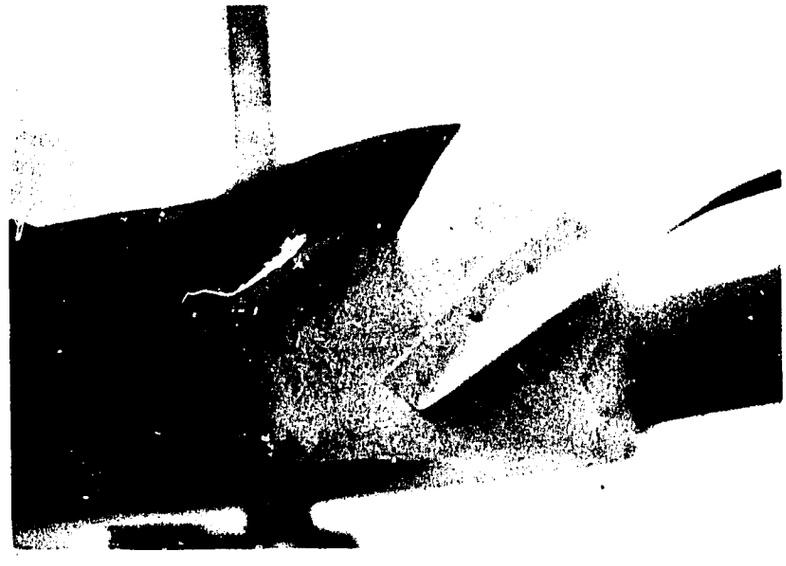

Fig. 27 Revised dryer blower fan.

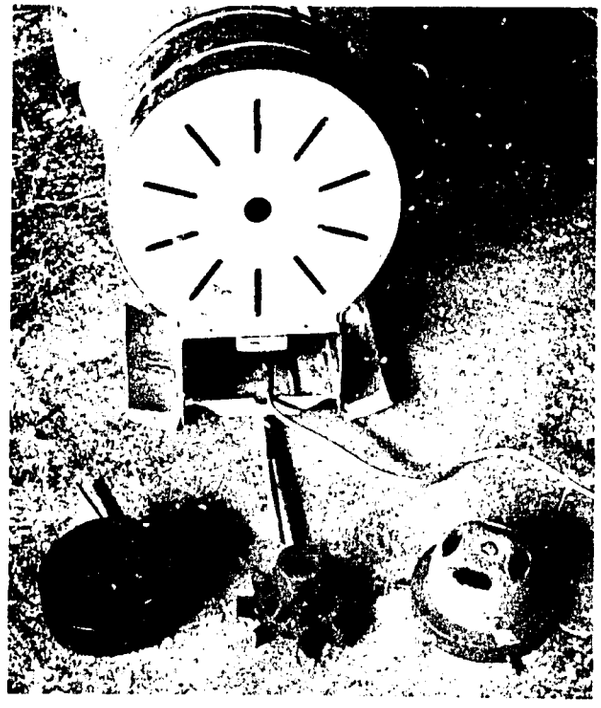

Fig. 28 IRRI batch dryer burner components.

Fig. 29 Modified dryer burner components.

Fig. 30 Unloading vertical bed dryer.

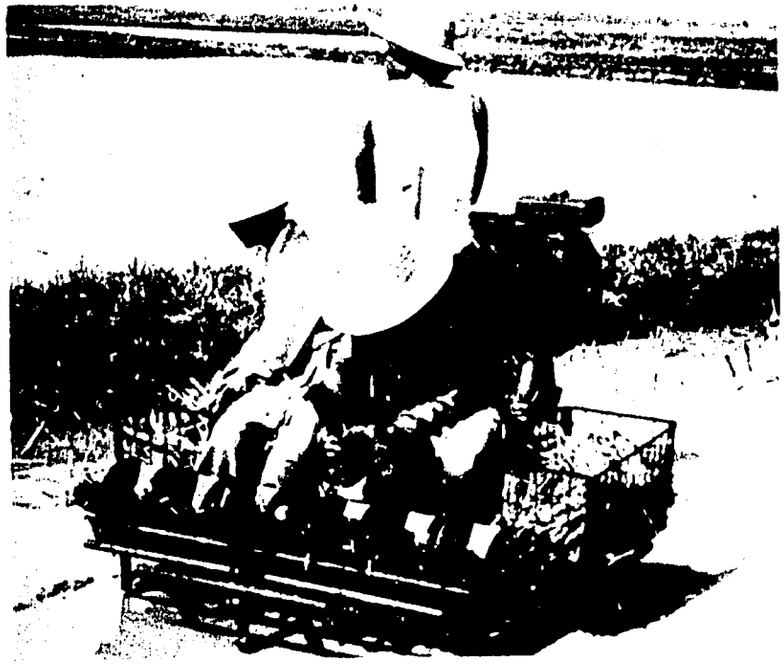

Fig. 31 Powered transplanter.

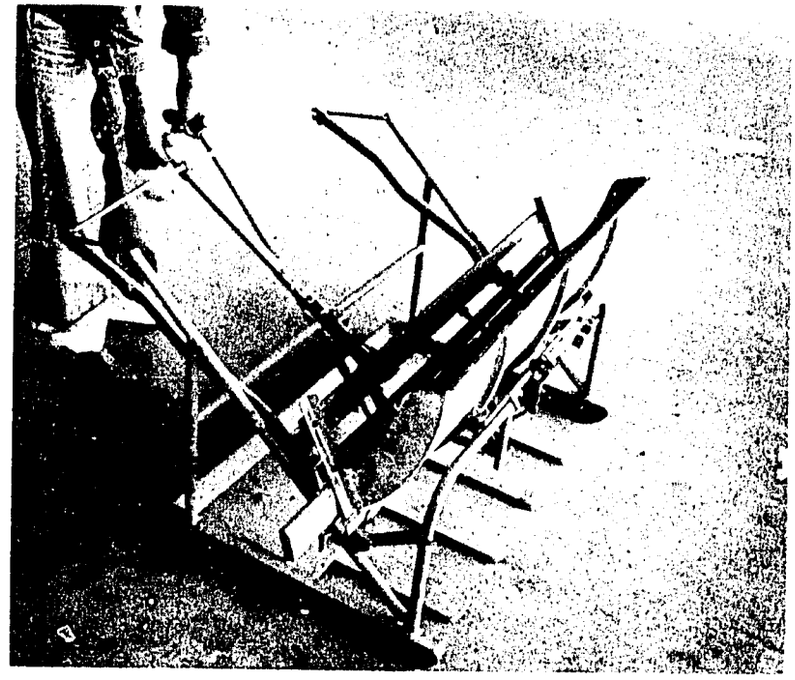

Fig. 32 Manual transplanter.

PERSONNEL LIST*

Name	Position
B. Duff	Associate Agricultural Economist & Department Head
D. Kuether	Associate Agricultural Engineer
W. Gunkel	Visiting Agricultural Engineer
S. Mahmud	Visiting Engineer
I. Manalili	Assistant Engineer
J. Policarpio	Assistant Engineer
J. Samuel	Post-doctoral Fellow
K. Kim	Research Scholar
A. Resurreccion	Research Scholar
J. Arboleda	Senior Research Assistant
S. Labro	Senior Research Assistant
N. Navasero	Senior Research Assistant
Z. Toquero	Senior Research Assistant
M. Aban	Research Assistant
A. Caballes	Research Assistant
F. Cabrales	Research Assistant
R. Dayrit	Research Assistant
L. Ebron	Research Assistant
G. Espiritu	Research Assistant
F. Juarez	Research Assistant
L. Kiamco	Research Assistant
H. Manaligod	Research Assistant
C. Maranan	Research Assistant
G. Salazar	Research Assistant
M. Sumiran	Research Assistant
G. Villaruel	Research Assistant
F. Jalotjot	Drafting Supervisor
M. Diestro	Draftsman
R. Pabustan	Draftsman
N. Rivera	Office Assistant
J. Reyno	Office Aide
A. Bagalso	Secretary
E. Co	Secretary
L. Bañez	Clerk-typist
E. Dungo	Shop Supervisor
A. Barot	Shop Assistant
Z. Borja	Shop Assistant
A. Camacho	Shop Assistant
M. Castro	Shop Assistant
A. Dizon	Shop Assistant
M. Fabellar	Shop Assistant
C. Flojo	Shop Assistant
M. Macatangay	Shop Assistant
D. Manalo	Shop Assistant
P. de Mesa	Shop Assistant
M. Salac	Shop Assistant
R. Santos	Shop Assistant

*Please see Table 14 for Industrial Extension staff.

Personnel list cont'd.

Name	Position
F. de Leon	Field Assistant
L. Villegas	Field Assistant
G. Ladra	Field Assistant
E. Principe	Field Aide
P. Aldemita	Laborer
R. Capule	Laborer
R. Tobias	Laborer