AGENCY FOR INTERNATIONAL DEVELOPMENT
WASHINGTON, D. C 20523

BIBLIOGRAPHIC INPUT SHEET

FOR AID USE ONLY
Batch 81

1. SUBJECT CLASSIFICATION

A. PRIMARY
Serials Y-AN20-0000-GG50

B. SECONDARY
Food production and nutrition--Farm equipment--Tropics

2. TITLE AND SUBTITLE
Rice machinery development and industrial extension; semi-annual progress report, July-Dec.1976

3. AUTHOR(S)
(101) IRRI

4. DOCUMENT DATE
1977

5. NUMBER OF PAGES
~~62p.~~ 64p.

6. ARC NUMBER
ARC

7. REFERENCE ORGANIZATION NAME AND ADDRESS
IRRI

8. SUPPLEMENTARY NOTES *(Sponsoring Organization, Publishers, Availability)*
(Research summary)

9. ABSTRACT

10. CONTROL NUMBER
PN-AAF-464

11. PRICE OF DOCUMENT

12. DESCRIPTORS
Agricultural machinery
Intermediate technology
Rice

13. PROJECT NUMBER

14. CONTRACT NUMBER
AID/ta-C-1208 GTS

15. TYPE OF DOCUMENT

AID 590-1 (4-74)

NOT A/A

AID/ta-C-1208 GTS
IRRI PN-AAF-464

Semiannual Progress Report No. 23

July 1- December 31, 1976

RICE MACHINERY DEVELOPMENT AND INDUSTRIAL EXTENSION*

*AID/ta-C-1208

AGRICULTURAL ENGINEERING DEPARTMENT

THE INTERNATIONAL RICE RESEARCH INSTITUTE

P.O. BOX 933 MANILA PHILIPPINES

IRRI Rice Machinery Development

Primary objectives of the machinery development program are increasing the income and welfare of small rice farmers and fostering farm equipment manufacturing in developing countries. Improved mechanical technologies contribute directly to these goals by increasing food production through increased yields, reductions in field and post-production losses, increased cropping intensity, and improvement in quality and value of agricultural products. Appropriate machines can also reduce costs – a direct benefit to the low-income rice consumer. Mechanization based on local production conserves foreign exchange, expands opportunities in rural-based industries, strengthens linkages between agriculture and other sectors of the economy, and enhances training opportunities in small-scale manufacturing.

Program procedures begin by developing machines that satisfy two major conditions. First, designs must be compatible with the technical and economic needs of small farmers who use them. Second, the manufacture and servicing of the machines must be within the technical capabilities of indigenous small and medium-scale machine shops. Drawings, design information, and limited technical support are given free of charge to manufacturers who want to produce IRRI designs on a commercial basis, agree to the conditions of a Memorandum of Agreement, and provide information on their manufacturing facilities and marketing plans. IRRI retains worldwide distribution and patent rights for all designs developed at IRRI and does not grant exclusive manufacturing rights or licenses.

Training opportunities include a two-week engineering course that is conducted semiannually. Participants are expected to develop competency in the operation, maintenance, and manufacturing aspects of IRRI designs. Enrollment is limited to 12 persons per class.

Financial support for the development program comes from the IRRI budget which is funded by the Consultative Group on International Agricultural Research. Industrial extension projects in Pakistan, Philippines, and Thailand are supported by a United States Agency for International Development contract.

Location of the main research and development facility is the International Rice Research Institute, Los Baños, Philippines, with national liaison links found in countries throughout Asia, Latin America, and Africa. Reports describing program activities are issued semiannually and may be obtained upon request.

Agricultural Engineering Department
International Rice Research Institute
P. O. Box 933, Manila, Philippines

LIAISON OFFICES

IRRI/PAK Machinery Program
c/o LAPSA, P. O. Box 1237
Islamabad, Pakistan

IRRI/THAI Machinery Program
P. O. Box 2453
Bangkok, Thailand

THE INTERNATIONAL RICE RESEARCH INSTITUTE

SEMIANNUAL REPORT NO. 22
January 1 - June 30, 1976

ERRATA SHEET

Page 39. Line 7, "US$1300" should read "US$175".

Page 53. Table 17, under heading "Initial investment potential (US$):", delete all data for the "Mean" entry. Replace with 250, 150, and 235, respectively.

TABLE OF CONTENTS

Title	Page
Introduction and Summary	1
Design and Development	4
Steering clutches for 5-7 hp power tiller	4
6-8 hp tiller	4
Small 4-wheel riding tractor	5
Rice transplanter	5
Multicrop upland seeder	6
Vertical axis windmill/piston pump	7
Liquid injector for lowland rice	9
Spot injector for granular fertilizer and insecticides	9
Portable thresher	9
Portable grain cleaner	10
Steam engine	10
Tables and figures	12
Mechanization Research	26
Compacted soil studies	26
Multihopper seeder study	26
Power tiller survey	27
6-8 hp tiller tests	29
Portable thresher evaluation	29
Grain cleaner tests	30
Tables and figures	31
Mechanization Systems	34
IRRI-UPLB-BRBDP rice post-production technology project	34
Potential for mechanizing upland cropping operations	36
Sequential farming	37
Tables and figures	39
Industrial Extension	48
Industrial extension subcontract program	48
Manufacturer's workshop	49
Manufacturing cost reduction project	50
Cost estimating and value analysis	50
Liaison with manufacturers in the Philippines	51
Industrial extension project in Thailand	51
Industrial extension project in Pakistan	52
Tables and figures	54
Personnel list	58

INTRODUCTION AND SUMMARY

Development of a new power tiller received major emphasis during this reporting period. This new design is intended to supersede the present IRRI tiller and offers increased durability and versatility. Choice of diesel or gasoline engines and steering clutches are important added features. Work on adapting a diesel engine to our present tiller and development work on a tiller using a Japanese transmission was suspended to permit full emphasis on development of the new design.

The portable thresher is being tested in the field and continues to receive favorable response from farmers who use it. It is expected to be released during the first quarter of 1977.

New development projects initiated during this period include a transplanter and multicrop upland seeder. Work continued on development of the windmill/water pump and the rice straw and hull burning steam engine as possible alternatives to petroleum-fueled engines.

The compacted soils study is in the eighth cropping season and the rate of deepening of the compacted layer depths has decreased but has not yet stabilized. The study will continue.

Preliminary results of a survey of power tiller owners and dealers in selected areas of the Philippines indicate that farmers desire a tiller that is more durable and easier to handle. They prefer to purchase from dealers that provide good after-sale service and stock an adequate supply of service parts.

IRRI Agricultural Engineering is cooperating with Agricultural Engineering of the University of the Philippines-Los Baños and the Bicol River Basin Development Program in a post harvest and mill study in which trials will be conducted on farms and in rice mills to determine the efficiency and economic performance of alternative post-production systems.

Eleven engineers and manufacturers attended the two-week training course in September. They came from eight countries and represented subcontractors, cooperating manufacturers, and government agencies. The next course is scheduled for February, 1977 and another is planned for October, 1977.

Dr. W. W. Gunkel, Professor of Agricultural Engineering, Cornell University, is spending a one-year sabbatical in our department. He is working on the evaluation of tillage implements and practices under upland conditions and chemical application equipment, especially ultra-low volume sprayers.

The USAID Industrial Extension projects in Pakistan and Thailand have completed initial office establishment and staffing and are now con-

sidered fully operational. They are actively promoting IRRI designs among manufacturers and farmers and have begun the evaluation and adaptation of these machines to local conditions.

Seven industrial extension subcontracts are now active, with the addition of the subcontract established with the Bangladesh Agricultural Research Council. A workshop for Philippine manufacturers of IRRI designs was held in July at IRRI to discuss problems encountered by their industry. Twenty-two manufacturers attended the two-day meeting. Two issues of the IRRI Farm Machinery Newsletter were distributed and the fourth issue was prepared during this period.

Papers and Publications

Toquero, Z., C. Maranan, L. Ebron, and B. Duff. 1976' An empirical assessment of alternate field-level rice post-production systems in Nueva Ecija, Philippines. A progress report. July.

Hess, P. L. 1976. Cooperation with the International Rice Research Institute in the introduction of IRRI-designed agricultural equipment in Pakistan. Semiannual progress report no. 1, Economic Development Laboratory, Georgia Institute of Technology. July.

Stephens, K. S. 1976. Cooperation with the International Rice Research Institute in the introduction of IRRI-designed agricultural equipment in Thailand. Semiannual progress report no. 1, Economic Development Laboratory, Georgia Institute of Technology. July.

Gutierrez, S. 1976. IRRI industrial liaison activities: Philippines. Paper prepared for presentation at the manufacturer's workshop, IRRI. July 26-27.

Juarez, F. 1976. A profile of power tiller manufacturing and distribution activities in the Philippines. Paper prepared for presentation at the manufacturer's workshop, IRRI. July 26-27.

Langam, N. and J. McMennamy. 1976. Manufacturing cost and control. Paper presented for presentation at the manufacturer's workshop, IRRI. July 26-27.

PROGRESS REPORT NO. 23
July 1 to December 31, 1976

The following projects were active during the reporting period:

Design and Development (J. McMennamy)

Steering clutches for 5-7 hp tiller	S. Mahmud
6-8 hp tiller	S. Mahmud
Small 4-wheel riding tractor	G. Espiritu
Rice transplanter	I. Manalili
Multicrop upland seeder	N. Navasero
Vertical axis windmill/piston pump	G. Salazar
Liquid injector for granular fertilizer & insecticide	N. Navasero
Portable thresher	J. Policarpio
Portable grain cleaner	J. Policarpio
Steam engine	L. Kiamco

Mechanization Research (D. Kuether)

Compacted soil studies	D. Kuether
Multihopper seeder study	R. Dignadice
Power tiller survey	F. Juarez, F. Cabrales
6-8 hp tiller tests	F. Cabrales, R. Dignadice
Portable thresher tests	R. Dayrit
Grain cleaner tests	J. Arboleda

Mechanization Systems (B. Duff)

IRRI-UPLB-BRBDP rice post-production technology project	C. Maranan, L. Ebron Z. Toquero
Potential of mechanizing upland cropping operations	G. Villaruel
Sequential farming	B. Duff

Industrial Extension (S. Barton, A. Khan, J. McMennamy)

Industrial extension subcontract program	J. McMennamy
Manufacturer's workshop	S. Gutierrez
Manufacturing cost reduction project	N. Langam
Cost estimating and value analysis	N. Langam, H. Manaligod
Liaison with manufacturers in the Philippines	S. Gutierrez
Industrial extension project in Thailand	S. Barton
Industrial extension project in Pakistan	A. Khan

DESIGN AND DEVELOPMENT

Steering Clutches for 5-7 HP Power Tiller

Development work continued on this project during the early portion of the reporting period. The clutch actuating mechanism functioned satisfactorily; however, problems with clutch jaw durability continued and it appears doubtful that a satisfactory design can be developed within the space and material availability limitations imposed by this approach. Various jaw clutch materials were tried, but none gave satisfactory performance.

Jaw clutches were fabricated of mild steel and carburized by the pack carburizing method and tempered to a hardness of RC 58 to 61. Clutches were also made from low carbon alloy steel and from tool steel. These clutches were heat treated by a commercial shop in Manila to a hardness of RC 58 to 61.

The department does not have the instrumentation necessary for measuring field operating loads on the drive axle of the power tiller, but it is apparent that locating steering clutches on the drive axle presents many problems that can be avoided by a different design approach. In light of the encouraging preliminary results obtained with the steering clutches on the new 6-8 hp power tiller design, work on this project was suspended pending the outcome of tests on this new design.

6-8 HP Tiller

The objective of this project is to develop an improved version of the present 5-7 hp design. Feedback from farmers and manufacturers indicate a preference for a diesel-powered unit with steering clutches and improved durability. Design efforts were focused on keeping product cost low and avoiding high technology production processes.

The new design uses a single transmission housing instead of two used in the previous design (fig. 1). The same size roller chain is used throughout and only three sizes of sprockets are required. The number of bearing sizes used was reduced from four to two and although steering clutches were added to the new design, there was a 28% reduction in repair parts inventory items.

The steering clutch mechanism is located on the intermediate transmission shaft. Two socket head capscrews, mounted on each side of the first reduction driven sprocket, engage flat bars welded to the ends of the final reduction driver sprockets (fig. 2). When the clutch lever is actuated, the disengaging fork slides the flat bar out of engagement with the capscrews to effect de-clutching.

Without engine, the new design weighs about 10% less than the pre-

vious design. The unit with engine weighs more, since a diesel engine weighs considerably more than the gasoline engine used on the previous design. The increased weight required use of a larger diameter cage-wheel with wider lugs for lowland operations. A comparison of the present and new tillers is shown in Table 1.

The new design's reduced weight and higher floatation wheels allow it to negotiate softer fields that was possible with the 5-7 hp tiller. When equipped with a gasoline engine, the tiller can be efficiently handled in lowland conditions without the use of steering clutches, but when a 6 hp diesel engine was installed, turning was extremely difficult without the aid of the steering clutches.

At the end of this reporting period a prototype of this design had undergone 100 hours of field testing without problems. The transmission was subjected to an accelerated life test on a dynamometer. This test is described in the mechanization research section of this report.

Small 4-wheel Riding Tractor

The 4-wheel tractor prototype described in Semiannual Report No. 22 was tested in lowland and upland field operations. The tractor had completed 52 hours of a drawbar pull test when the final drive gears failed. The tractor had logged 156 field hours before the failure. The gear set is being analyzed to determine if adequate life can be obtained within the existing space limitations.

During field tests, the tractor could prepare 1.6 hectares of lowland paddy fields per 8-hour day using the 1.35 m wide rotary tiller. The tractor can plow about 0.5 hectares of upland per day using a single moldboard plow with a 25 cm bottom. A 0.82 m wide rotary tiller can perform satisfactory tillage in upland soils at a forward speed of 1.4 km/hr and a depth of 10 cm.

A detailed cost analysis is being conducted by the industrial extension teams in Pakistan and the Philippines to determine if this design is competitive in price with imported tractors of the same power class.

Rice Transplanter

A project to develop a simple, manually operated transplanting machine was initiated at the start of this reporting period. The transplanting of rice seedlings is one of the most labor intensive phases of rice production. Transplanting requires about 100 manhours per hectare. The Japanese type 2-row mechanical transplanter can reduce labor requirements to as low as 8 to 10 manhours per hectare, but its cost is prohibitive for small Asian farmers. This transplanter functions very well under farming conditions in Japan, but it often encounters difficulty in coping with field and seedling conditions found in tropical Asia. Thus, development of a less costly machine that is more suited to the needs of farmers in the LDCs is necessary.

Initial effort was concentrated on developing an appropriate seedling picking and planting mechanism. An experimental transplanter with a simple rotating disc to carry a number of "pickers" was fabricated. The disc was driven by a groundwheel through a roller chain and sprocket drive and picks seedlings from a holding tray. The mechanism was tried in a bin measuring 15 x 30 x 305 cm which was filled with soil and water to simulate flooded field conditions.

The picker consists of a pair of steel rods (fingers) installed on the rotating disc. One finger was fixed on the disc and the other hinged at one end. The hinged finger moves sidewise when a roller attached to it engages a stationary cam. This movement releases the seedling as it enters the soil.

Figure 3 illustrates the locus of the picker's tip as the machine moves forward. Depending on the relationship between the angular speed of the disc and the linear velocity of the machine, a curve can be attained which closely resembles the Japanese-type transplanters (fig. 4) utilizing a 4-bar linkage mechanism. It is desirable to maintain this curve to avoid a bulldozing effect as the picker moves through the soil.

The picking mechanism of the experimental machine singulated seedlings well when tested on mat-type seedlings, but seedlings were not planted erect and often clung to the disc. The clinging was caused by mud accumulation on the picker. These problems, plus findings that the pair of rod pickers are effective only on the more carefully prepared mat-type seedlings, led to a decision to try a different approach.

Fork-shaped pickers with three points were installed on the disc instead of the pair of rod fingers. The disc axis was raised so the pickers did not touch the soil (fig. 6). A guide chute was provided to prevent the seedlings from dropping off the picker as they were pulled from the seedling trays. A crank driven push rod was added to push the seedlings off the picker fork and into the soil. Figure 5 shows that the locus of the push rod tip maintains the same shape of curve shown in Figure 4. It is felt that this type of mechanism can accommodate a wide range of seedling lengths and water depths.

The modified machine was tested in the soil bin using traditional seedlings (washed roots) and encouraging results were obtained. Further refinements are being added in preparation for trials in the field.

Multicrop Upland Seeder

Improvements in seeding methods can potentially improve yields by establishing more uniform crop stands and by facilitating more effective crop care and harvesting. Limited water resources and variable climatic conditions found in many areas of the tropics make planting on schedule important, and the slow speed of traditional manual planting techniques often limits the hectarage farmers can plant at the optimum time.

The objective of this new project is to develop a multicrop seeder with a convenient means of varying row spacing and seed spacing in the row. Other objectives established at the start of the project were a capacity of over one hectare per day and an upper cost limit of US$125.

The first prototype (fig. 7) has individual seed hoppers and seed metering plates for each of its five rows. The seed plates are pinned to a common oscillating frame which is driven by a cam on one of the two ground wheels (fig. 8). The cam drive can be disengaged so seeds are not metered during transport and turning at the end of rows.

Row spacing can be varied from 20 cm up, in increments of 20 cm, by selectively filling the seeder's hoppers. The seed plate has seven pairs of graduated holes, and seeding rate is varied by adjusting the seed plate position to expose different size holes to the seed in the hopper. Spacing in the row is adjusted by changing cams on the ground wheel driving the oscillating mechanism. Individual seed hoppers and seed plates for each row permit simultaneous planting of two crops. For example, one row of corn can be seeded with a row of beans on either side.

Preliminary field tests are encouraging. Uniform seed placement was achieved in planting rice, soybean, mongo, and corn with small kernels. Some bridging occurred when planting large kernel corn and peanuts. Three to five hours were required to seed one hectare when pulling the seeder with a power tiller. Seed plate changes and seed rate adjustments can easily be made without tools.

To prevent the bridging of large seed, the hopper bottoms will be widened and the length of oscillation will be increased. Press wheels will also be added.

Vertical Axis Windmill/Piston Pump

Foot valve problems and the limited lift capability of the tubular pump prompted the development of a self-priming piston pump for use with the windmill.

A 150 mm I.D. (6-inch nominal) PVC pipe was used for the cylinder. Steel plates, held in place by six 10 mm dia. tie bolts, were used as top and bottom covers. A pipe coupling was welded to the bottom plate to connect the pump to the suction pipe. Four of the clamping bolts extend beneath the bottom plate and anchor the pump assembly on the base plate (fig. 9). The piston assembly includes a poppet-type discharge check valve. The flapper-type suction check valve was attached to the bottom plate.

A 63 mm I.D. (3-inch nominal) PVC pipe is attached to the upper portion of the cylinder and serves as the discharge pipe.

The windmill drives the pump through a belt-driven crank arrangement. A 5 x 10 cm wooden lever connects the piston rod and crank rod and provides a means of manually operating the pump and balancing the pump load at dif-

ferent lift conditions. The crank pulley is driven by a 90° twist B-section V-belt drive from the windmill shaft (fig. 10).

The piston pump is designed primarily to pump water from a canal or shallow well. The pump capacity ranges from 30 to 200 liters per minute depending upon length of stroke and frequency (fig. 11).

The windmill-driven pump was operated in an IRRI canal over a period of four months without encountering serious problems. Modifications were made to overcome minor functional problems, reduce cost, and improve serviceability. The sheave grooves were deepened to keep the belt from jumping off in gusty winds. The center portion of the leather cup piston was made to function as a flapper valve to reduce cost. The top cover plate was cut into an annular-shaped ring with an inside diameter equal to the inside diameter of the PVC cylinder to allow easy removal of the piston assembly without removing the cover plate. A thin rubber sheet attached to the ring with screws serves as the top cover to prevent loss of water during the discharge stroke. To reduce cost, the bottom plate was replaced by a standard pipe companion flange.

Preliminary tests showed that at certain positions of the windmill relative to the wind direction, the windmill could not start. To increase starting torque, four 45-gallon drums were used with pairs of two-drum assemblies offset 90°to each other (fig. 12).

Several pumps with windmills were installed in different parts of the Philippines to evaluate performance in farm level irrigation systems (fig. 13).

Liquid Injector for Lowland Rice

A four-row injector with float valve flow regulator was developed (fig. 14). Due to the added weight, the skids were made larger than for the 2-row machine. A hand controlled rubber tube clamp was installed on the flow regulator outlet tube as a means of cutting off flow during transport and turning at the end of row. A large nylon strainer was installed inside the flow regulator to prevent granules and undissolved materials from clogging the nozzles. Four plastic tubes of equal length with 3 mm I.D. connected the injector nozzles to the outlet of the flow regulator. These plastic tubes also serve to control and equalize the flow of liquid to individual nozzles.

Limited tests indicate that the 4-row injector is about as easy to push as the 2-row unit. This is attributed to the operator position with the 4-row design. Part of this is due to the T-bar handle on the 4-row unit that allows the operator to use both hands for pushing the injector directly in front of him. Both machines are difficult to push in poorly prepared fields that have clods and in fields that have soil which consolidates rapidly after tillage.

Development of a multi-row liquid injector that can be used as a row marker for transplanting while applying chemicals is still being considered.

Spot Injector for Granular Fertilizer and Insecticides

The dual push rod injector for upland crops mentioned in Semiannual Report No. 22 was tested for placement efficiency and rate of fertilizer injection. The force required to inject fertilizer into the soil was also approximated. A prototype with a short handle was tried prior to these tests but the concentrated weight at the lower end of the machine caused difficulty in accurately positioning the injector close to the base of plants. A longer wooden handle was added to improve machine balance.

Injectors with three different nozzle sizes were tested. A spring balance was hooked to the end of the lever bar to determine the force required for injection. Figure 15 shows the average force required to push the hand lever when using five common fertilizer materials: urea, ammonium sulfate, solophos, muriate of potash, and amophos. Five sets of holes in the lever bar gave five rate adjustments (fig. 16). It was observed that adjustments 1 and 5 required higher forces in most cases. Application rates for each adjustment and nozzle were obtained by the weight difference of fertilizer before and after 10 injections in the field and averaging (fig. 17). This was replicated in four trials per adjustment using five types of fertilizers. It was found that a full stroke should be completed during each injection, otherwise the push rod jams on the return stroke.

Figure 18 shows the approximate weight of fertilizer that can be placed in one hectare with one spot injection per plant for a crop with 40 to 60 thousand plants per hectare. Multiple injection per plant could be applied for crops with much lower population.

The test results on rate calibration show that adjustments 1 and 5 can be eliminated. The small nozzle injector is suitable for crops with high plant population while the large nozzle is better for crops planted with low population. The injector can be beneficial for applying fertilizer on garden crops, root crops, orchard trees, and tobacco.

Portable Thresher

During the July workshop on the "Manufacture and Distribution of IRRI-designed Agricultural Equipment", the portable thresher was introduced to Philippine manufacturers. Although the thresher was still undergoing durability testing several manufacturers were permitted to proceed with the fabrication of prototypes. This involved the cooperating manufacturers in the development process and allowed them to do some test marketing which also provided useful information to IRRI.

From the original design described in Semiannual Report No. 22, different versions have been developed. An automotive fan blade was attached directly to the engine output shaft and serves as a winnowing blower. A converging bell-mouth shroud was added to the fan to provide optimum air-moving performance (fig. 19). Large pieces of straw are difficult to separate from the threshed grain by conventional cleaning methods, so a mechanical screening system will be developed for the thresher which will

be offered as an option.

The thresher was tested in sorghum and soybeans. Although this machine performed better than previously released threshers, further development will be required to improve the design's performance in these crops. Several threshers were loaned to farmers to evaluate their performance in actual field conditions.

Five Philippine manufacturers have submitted acceptable quality prototypes to IRRI and have been given approval to begin fabricating units on a commercial basis. An additional 11 manufacturers are in various stages of prototype fabrication and testing. The design is being evaluated by cooperators in India, Korea, Pakistan, Sri Lanka and Thailand.

Portable Grain Cleaner

The small oscillating grain cleaner described in Semiannual Report No. 22 was redesigned and a production prototype was fabricated (fig. 20). The body of the cleaner was fabricated from 12 mm thick plywood and light gage angle iron was used for the frame and legs. The oscillating linkages are similar in construction to those used on the axial-flow thresher with oscillating screen. The integral arrangement of the blower and eccentric drive used on the experimental prototype was retained. The discharge chute was separated from the oscillating screen to reduce the vibrating mass.

The cost of this cleaner with electric motor is expected to be compatible to the hand operated winnowers (hungkuyan) presently used by Filipino farmers. The hungkuyan does not have a provision for screening large impurities from the grain so the IRRI-designed unit will offer the farmer improved performance. It is anticipated that the portable grain cleaner will be used as a companion piece of equipment with the portable axial-flow thresher.

The machine is undergoing comprehensive testing prior to release to cooperating manufacturers.

Steam Engine

This new project was initiated for several reasons. First, a rice straw or rice husk-fueled steam engine may provide the lowest cost means of pumping water and performing other stationary engine tasks. Second, fossil fuel reserves are limited and there is a need to find ways to use renewable sources of energy. Third, foreign exchange is scarce in most developing countries and fossil fuel imports are a major user of foreign exchange.

It appears feasible to use rice straw or rice husk as fuel to power a steam-driven pumping device. The heat of combustion contained in these materials from a one hectare ricefield is about 5.9×10^6 K cal. The total energy required to irrigate a hectare of paddy from a water supply six meters below ground level is about 1.4×10^5 K cal. If the energy in the

rice straw and rice husk is used for pumping the water, the conversion must be done at a 2% efficiency, which appears feasible with existing technology.

Two types of steam engine are being evaluated as prime movers. The first is a simple condensing type (fig. 21). The boiler, valve plate, and condenser were made of mild steel and the piston and valve assembly are standard truck diesel engine parts. The boiler capacity is 7.2 kg/m at 7 kg/cm^2 (gage). For experimental purposes LPG fuel was used to fire the boiler.

The valve is operated by a mechanism attached directly to the piston which also provides timing adjustment. As the piston approaches bottom dead center, the valve opens and high pressure steam is admitted into the cylinder driving the piston upward (power stroke). The valve closes at about 25% of the upward stroke allowing the steam to expand up to the end of the piston's 25 cm stroke. Continuous condensation by the water jacket surrounding the cylinder causes the piston to travel downward and reopen the valve. The condensate flows to the boiler while the valve is open.

Tests showed that the .35 to .7 kg/cm^2 (gage) vacuum created during condensation was not always sufficient to open the valve. This was attributed to boiler pressure biasing the valve in the closed position. Adding a 55 kg dead weight load overcame the valve resistance but the power output during the upward stroke was considerably reduced. The valve was not open long enough to allow the condensate to flow into the boiler, and after 8 to 12 cycles of operation, the engine stopped due to water logging. To overcome these problems, a rotary valve is being designed to replace the poppet valve.

The second approach used a vertical, single-cylinder gasoline engine (7 hp Briggs & Stratton) converted to an exhausting uniflow steam engine as shown in Figure 22. The aluminum cylinder head was replaced by a mild steel plate to decrease the clearance volume to 4% of piston displacement. A chain-driven rotary valve was installed on the cylinder head and exhaust ports were drilled around the lower end of the cylinder wall. An auxiliary exhaust port in the rotary valve reduced back pressure during the compression stroke.

The cylinder was insulated with asbestos material to minimize heat loss and increase efficiency. The lubrication system was not modified for the initial short duration tests. The original flywheel's effective moment of inertia was doubled by installing an additional flywheel. A simple pony brake was attached to the engine to measure horsepower.

Initial tests were conducted using the condensing engine boiler. The engine produced 0.9 hp at 1400 rpm on 4.2 kg/cm^2 (gage) steam.

Continued development of both engines and a prototype boiler is planned.

Table 1. Comparison of IRRI 5-7 hp and 6-8 hp power tillers.

Description	5-7 hp	6-8 hp without steering clutches	6-8 hp with steering clutches
1. Horsepower rating[1]	2.34	4.02	4.02
Horsepower increase		+72%	+72%
2. Parts reduction			
chain sizes	3	1	1
no. of sprockets	6	6	6
sprocket sizes	6	3	3
no. of bearings	8	6	6
bearing sizes	4	2	2
no. of bolts	102	70	72
bolt sizes	10	5	5
transmission housings	2	1	1
reduction in repair parts	-	-37%	-28%
3. Weight (kg)			
Tiller (w/o engine)	85	74	76
Wheels	36 (51 cm dia)	36 (66 cm dia)	36 (66 cm dia)
4. Cost reduction (estimated, w/o engine & implements)	-	-20%	-14%

[1]Based on effective chain life of 2000 hours.

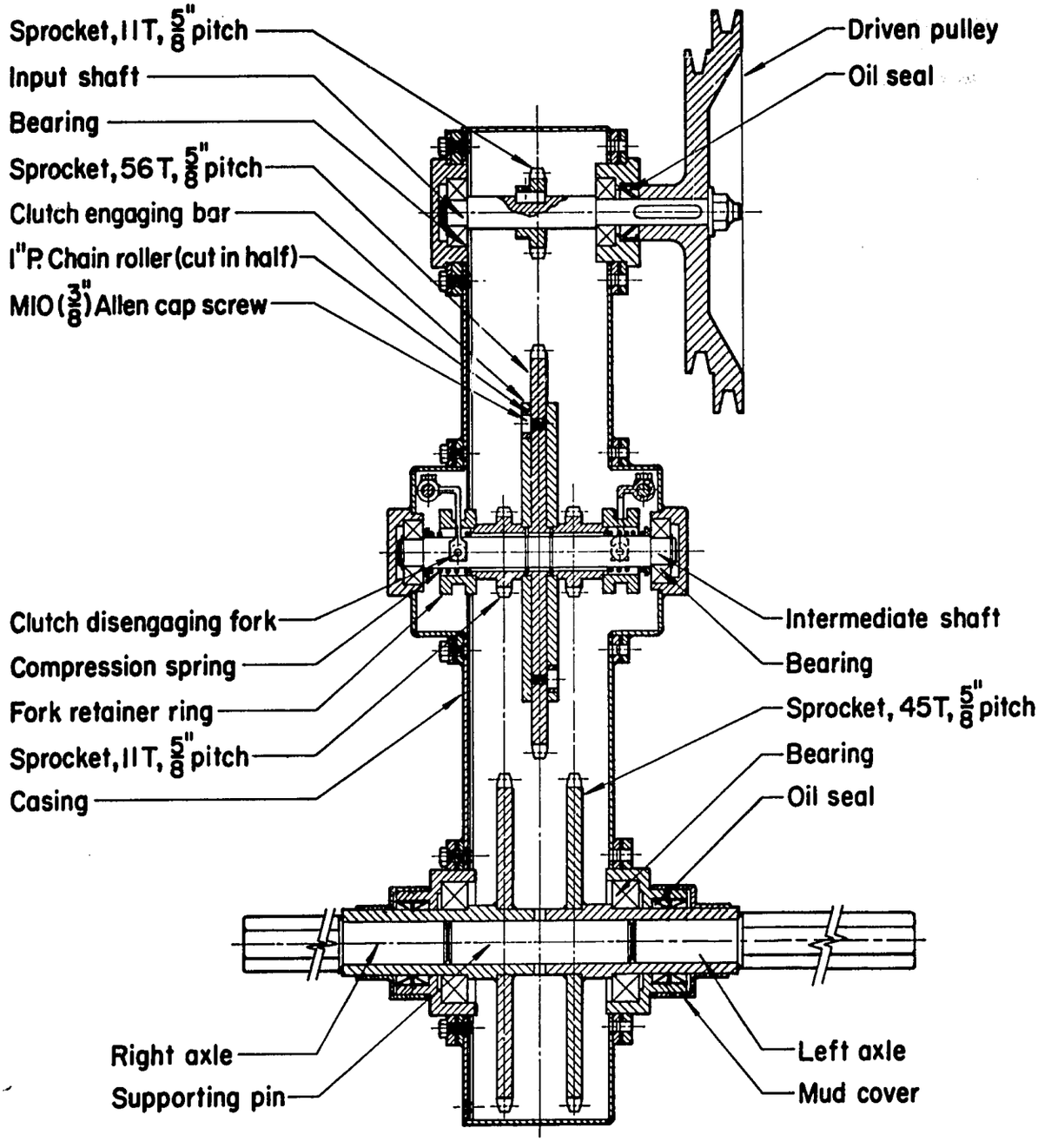

Fig.1 Cross-sectional view of IRRI 6-8hp Power Tiller with steering clutches.

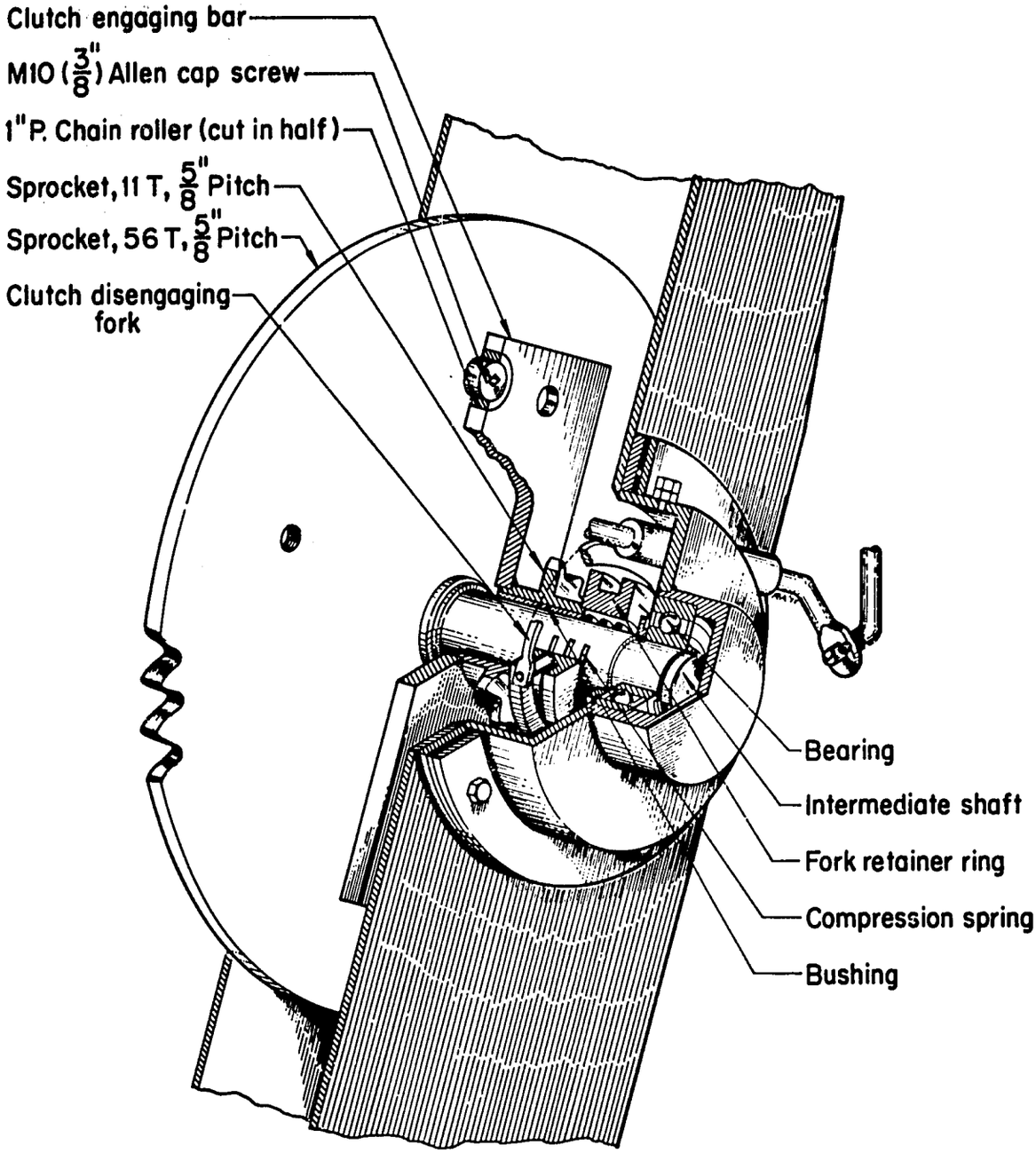

Fig. 2 . Cut-away view of steering clutches for 6-8 hp Power Tiller.

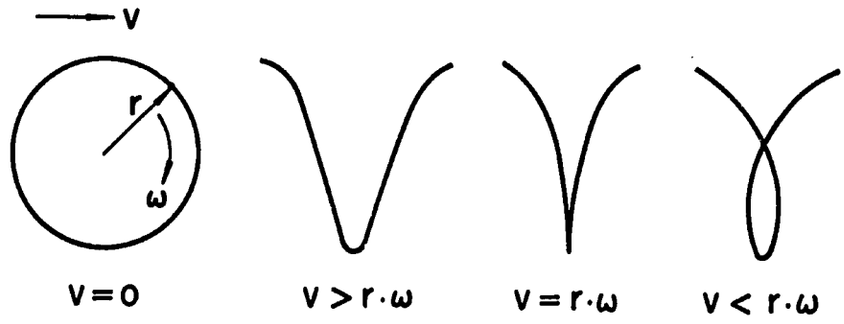

Where: r = radius of inscribed circle
ω = angular velocity of disc
v = linear velocity of machine

Fig. 3. Displacement diagram of a picker tip mounted on a rotating disc.

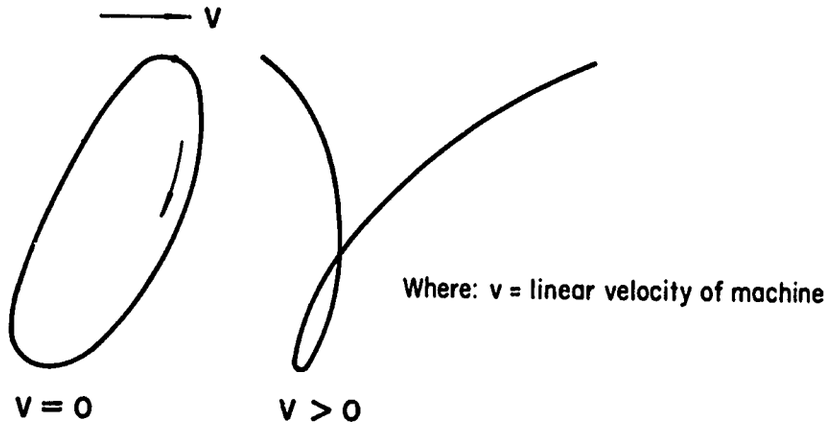

Fig. 4. Displacement diagram of a picker tip mounted on a 4-bar linkage mechanism used on a Japanese transplanter.

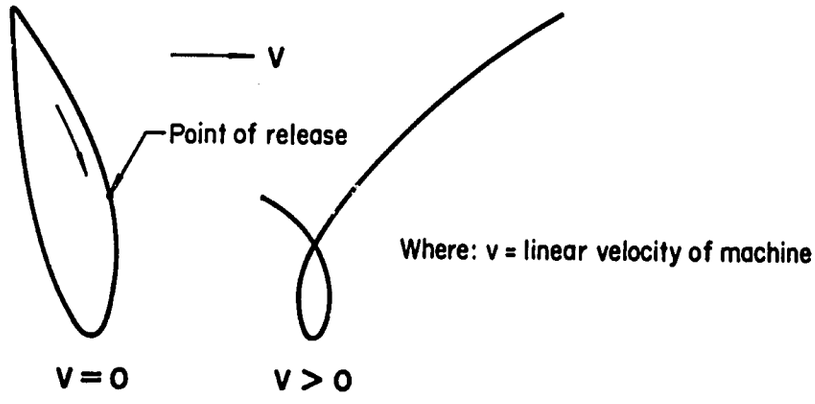

Fig. 5. Displacement diagram of a pusher tip mounted on a crank-push rod mechanism.

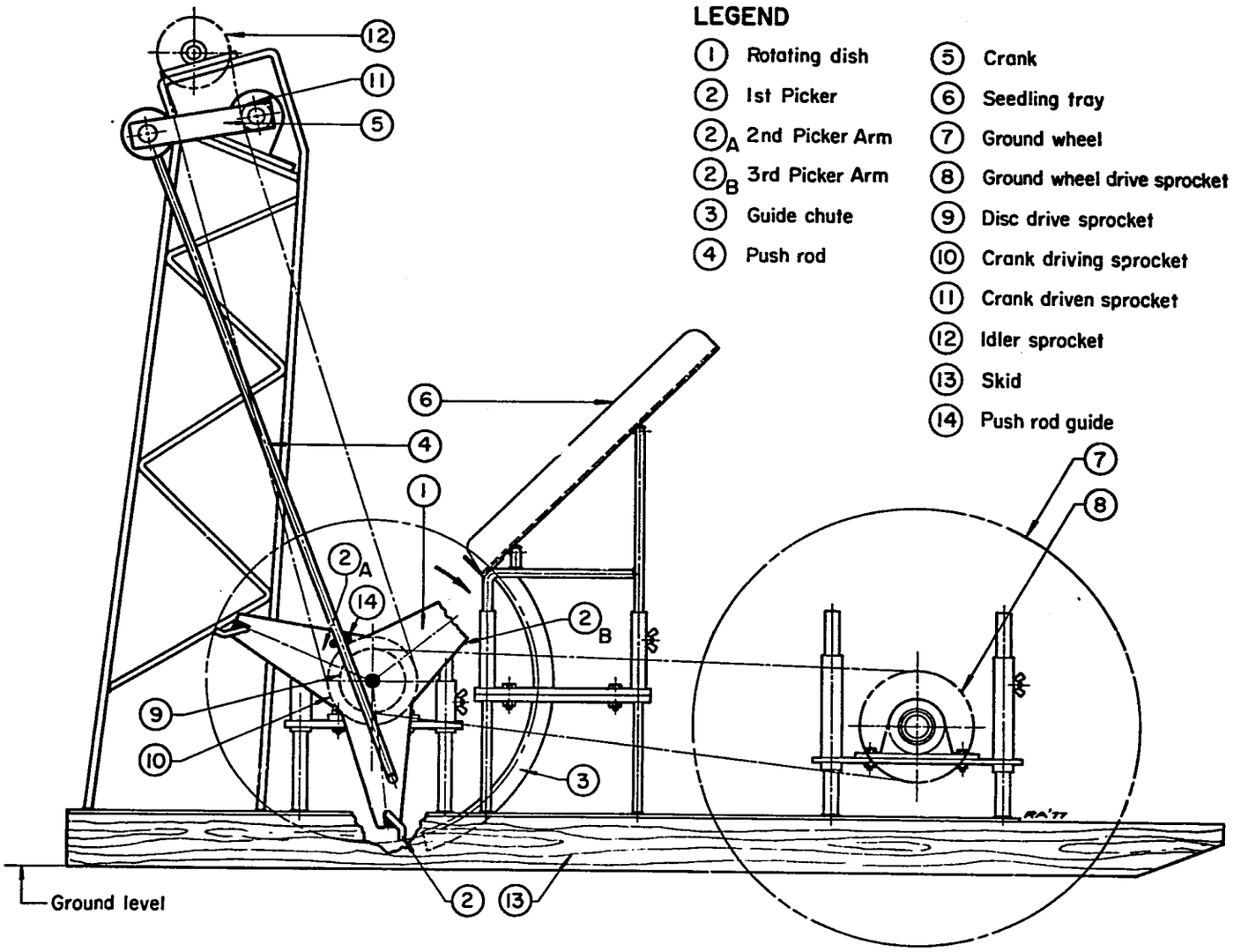

Fig. 6. Experimental Transplanter Mechanism.

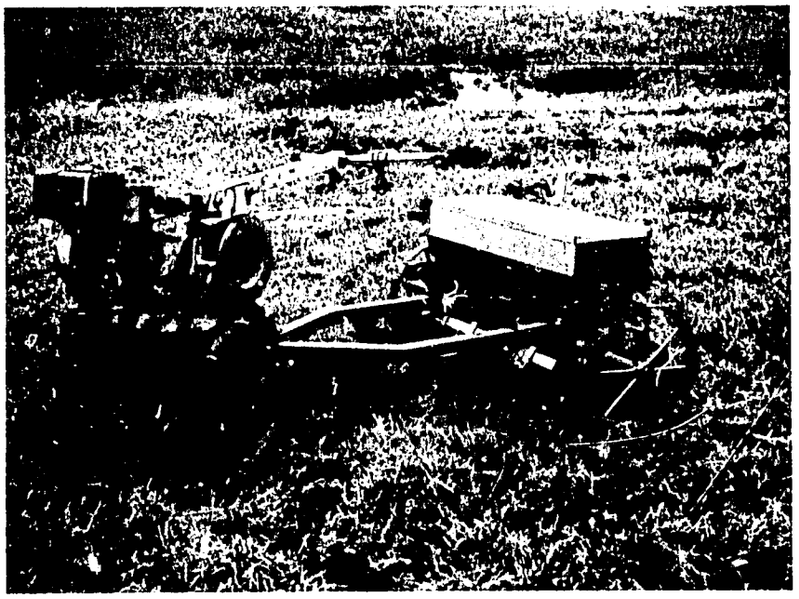

Fig. 7 Multicrop upland seeder.

Fig. 8 Seed-plate cam drive.

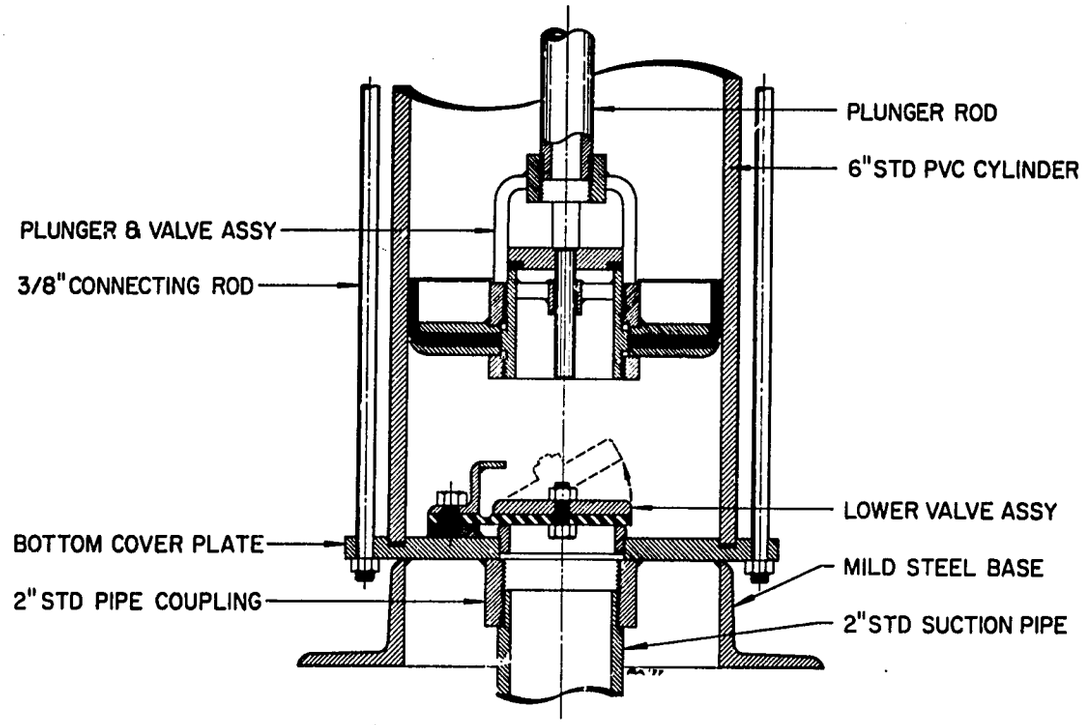

Fig. 9. Schematic of piston pump.

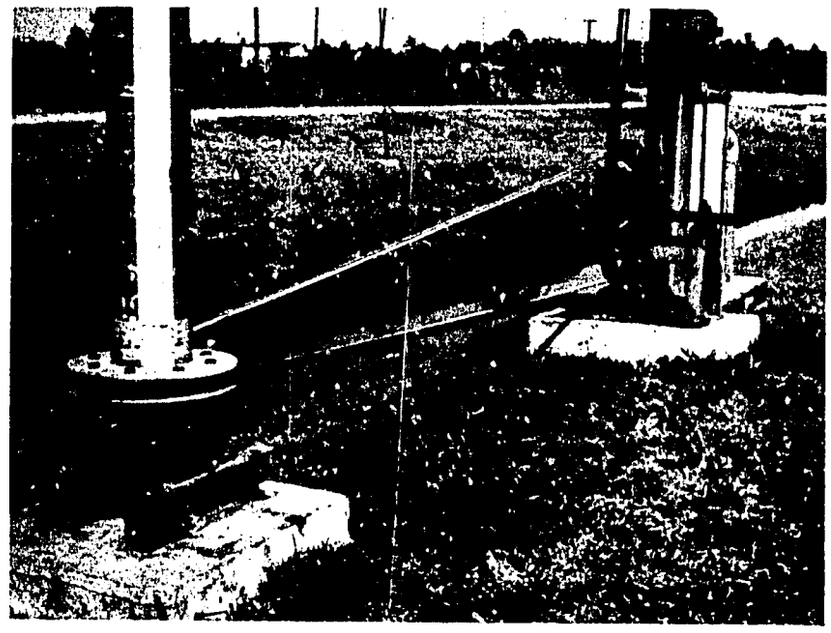

Fig. 10 Windmill/pump belt drive

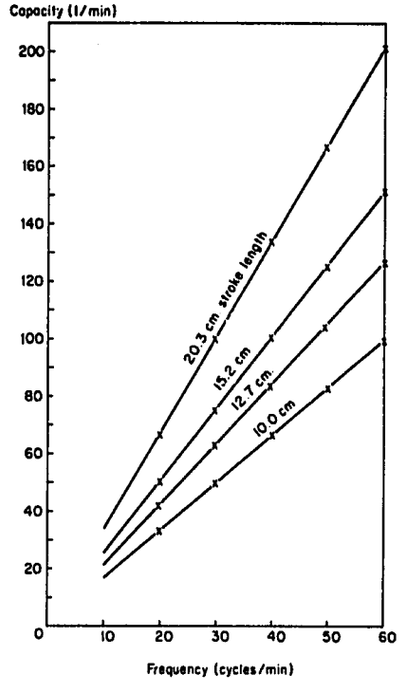

Fig. 11. 150mm piston pump capacity at different strokes and frequencies.

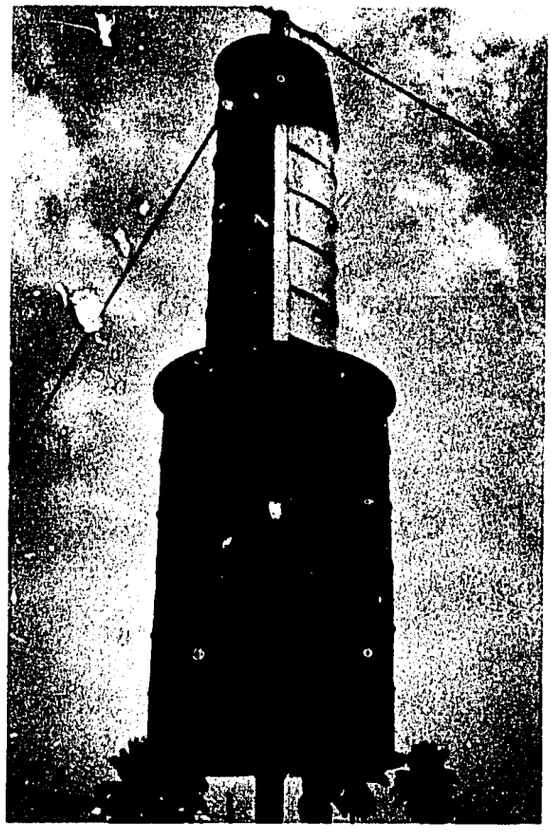

Fig. 12 Windmill with 90°offset.

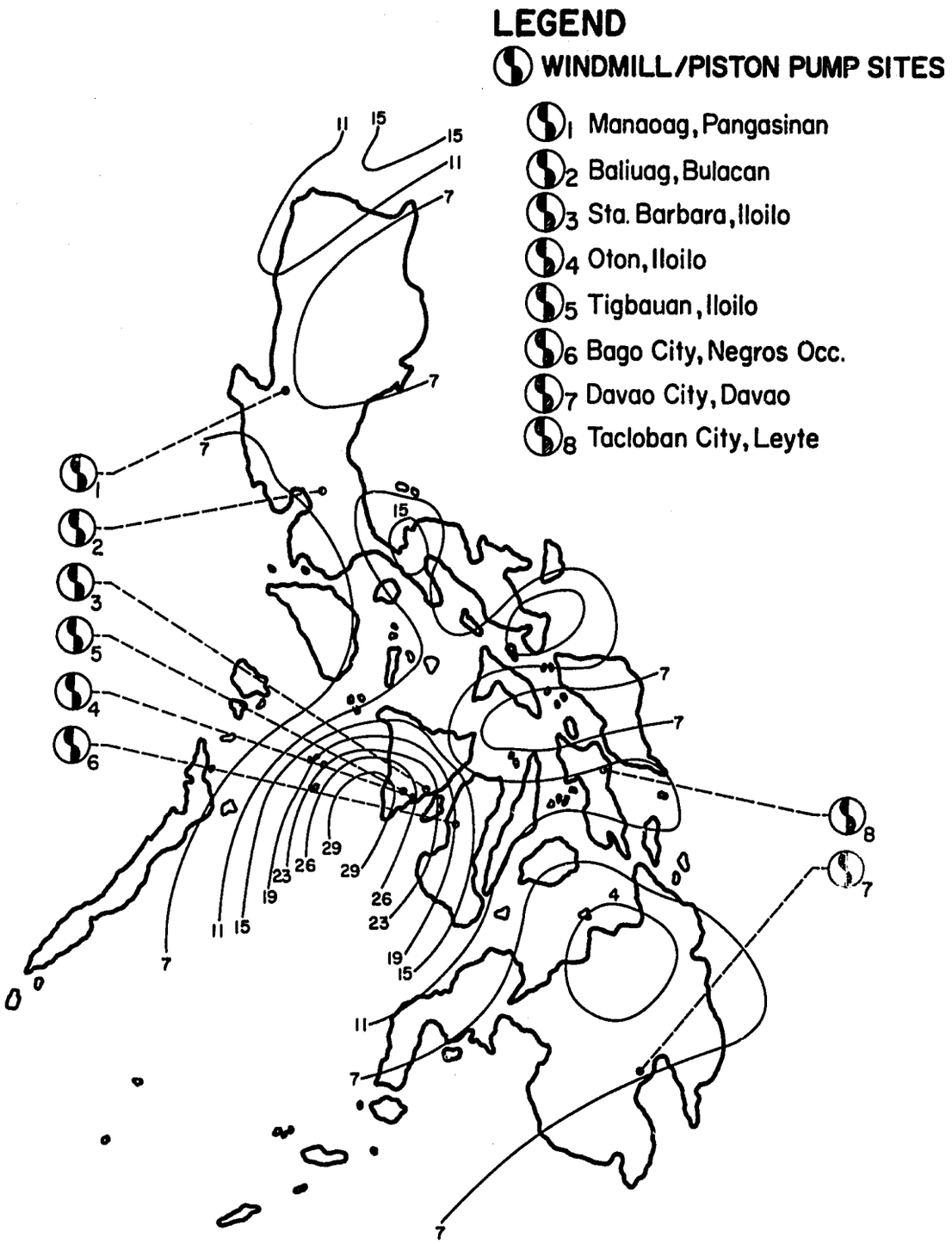

Fig. 13 IRRI-designed windmill-piston pump sites and January isotachs* in the Philippines.

*(ISOTACHS indicate the average wind velocity in kilometers per hour for the month of January.

Fig. 14 Four-row liquid injector.

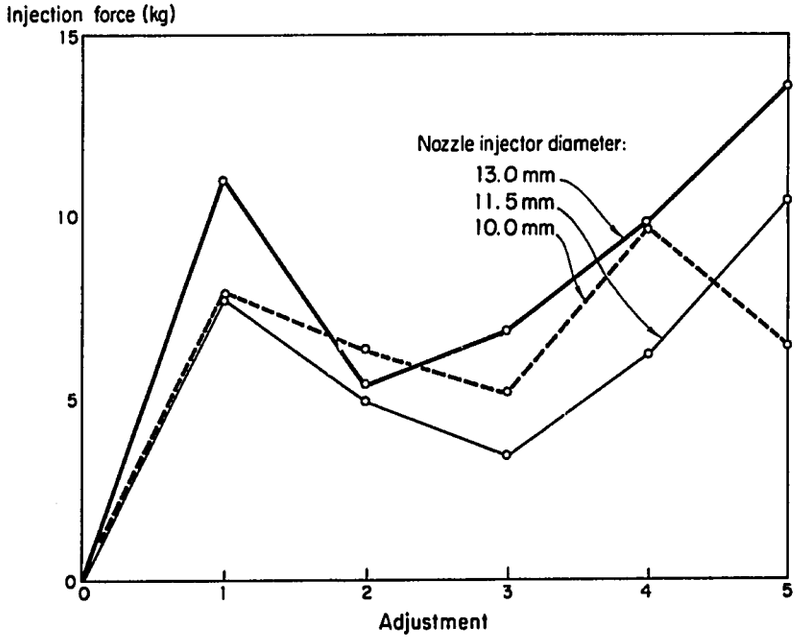

Fig. 15 Force on lever of spot injector during injection.

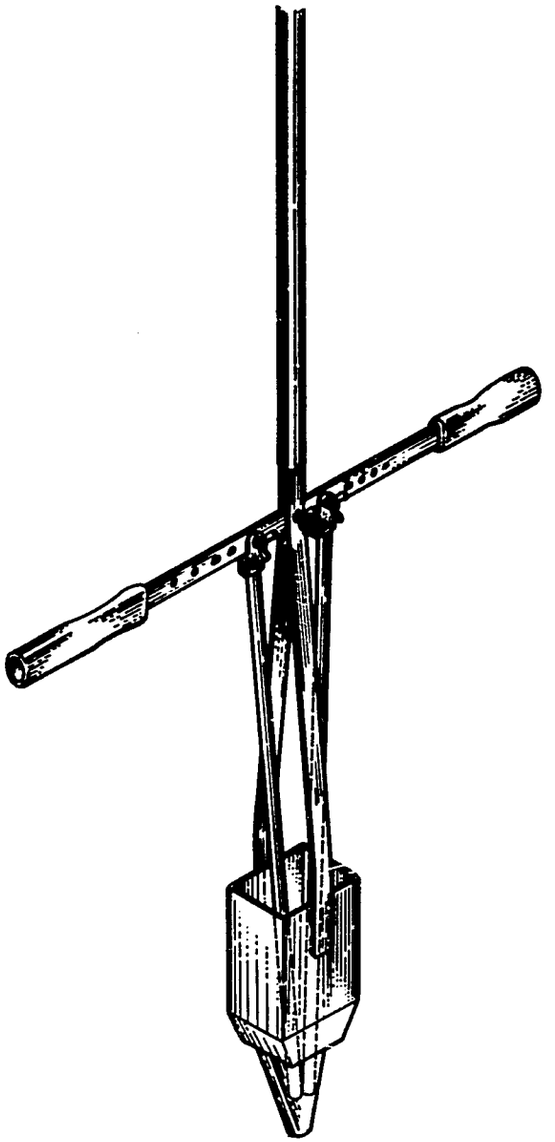

Fig. 16 Spot injector showing adjustment holes.

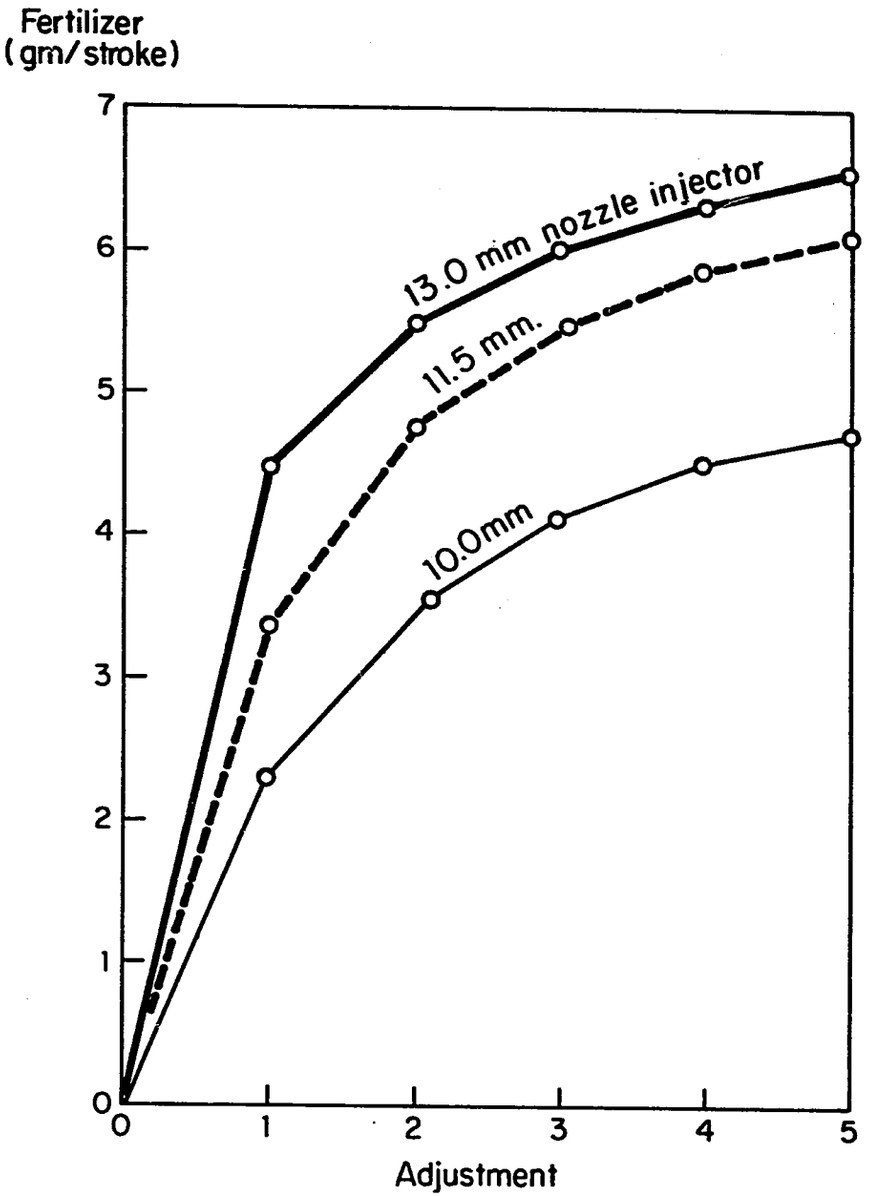

Fig.17 Fertilizer per stroke vs. lever adjustment.

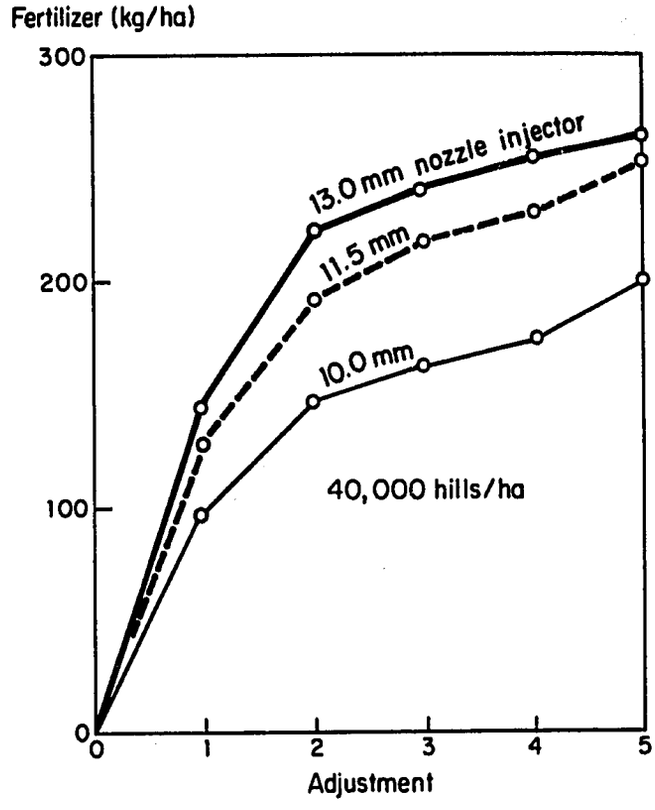

Fig. 18 Fertilizer rate with one spot injector per plant.

Fig. 19 Portable thresher winnowing fan.

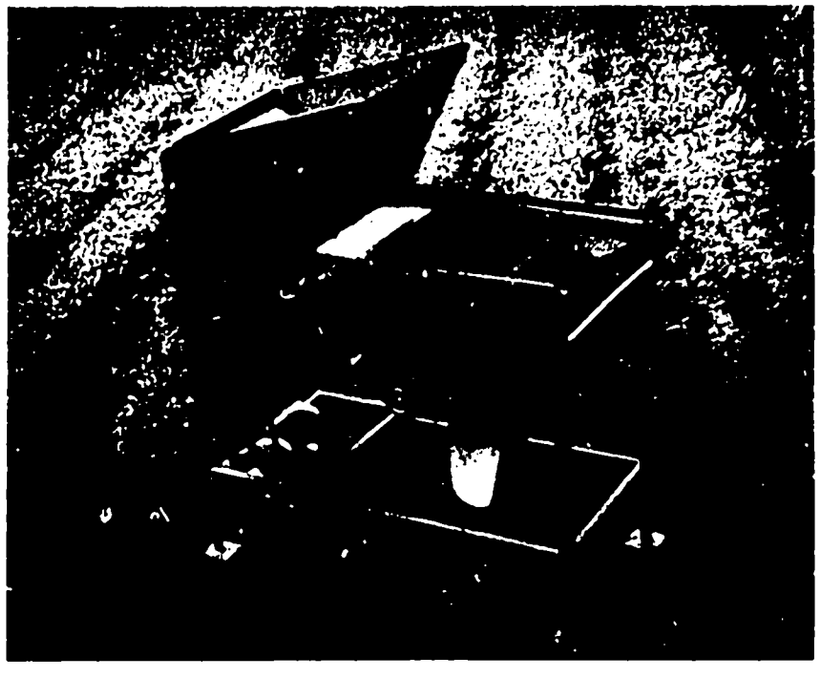

Fig. 20 Portable grain cleaner.

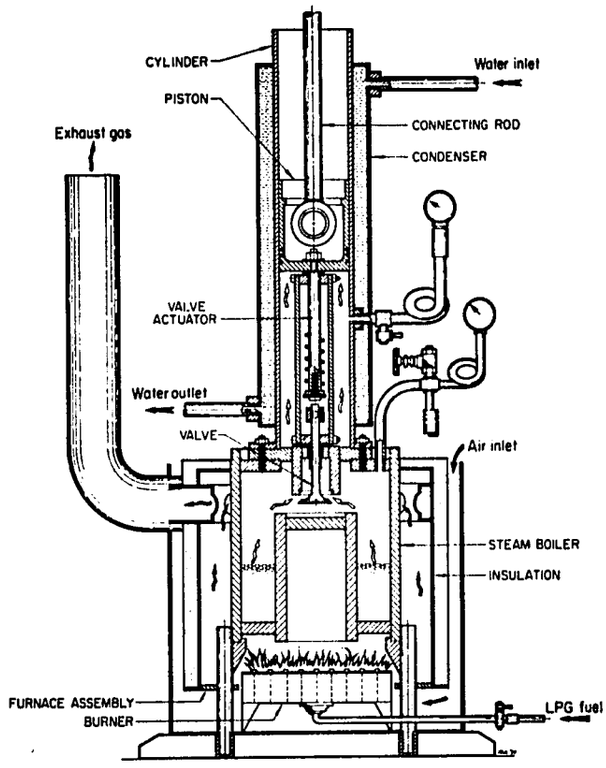

Fig. 21. Schematic of Steam engine.

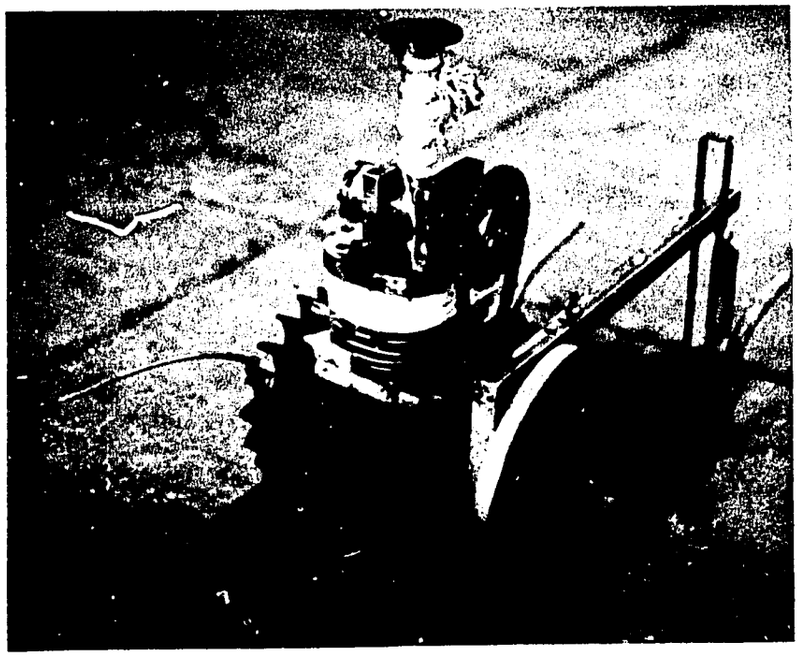

Fig. 22 Gasoline engine converted to steam.

MECHANIZATION RESEARCH

Compacted Soil Studies

This study was initiated to determine the effects of various tillage systems on the change in depth of the compacted layers in continuously cropped wetland rice soils. The research is being conducted in adjacent plots on the IRRI station, and is now in the eighth cropping season.

There was little significant change in compaction layer depths between crops seven and eight. The use of the 5-7 hp tiller in the 4-wheel tractor plot continued with little effect on reduction of the depth of that plot (fig. 23). Depth data depicted in previous reports for crops five through seven were slightly revised due to an error in data recording. Stabilization of the compacted layer depths has not yet occurred but appears to be increasing at a slower rate in the 5-7 hp tiller and carabao plots.

Multihopper Seeder Study

The IRRI-designed multihopper seeder can direct-seed rice efficiently under conditions of good water control. Its advantage over conventional broadcast methods is that the paddy is planted in rows at a uniform rate for easier weed control and more uniform stand establishment.

A test was conducted to determine the effects on row stability, stand, and yield when the paddy seeder is used with and without furrow openers. Planting on the surface is expected to improve seed survivability when heavy rains occur during the first one or two days after planting.

Two quarter-hectare fields on the IRRI farm were divided into four plots each for a total of eight plots. One plot was planted each day, half of each plot with the use of furrow openers and half without furrow openers. Plans to evaluate the effect of rain on the two seeding methods were not realized because only one shower occurred during the entire planting period with limited effect on one plot. The rain caused some seed scattering in the portion of the plot planted that day without the use of furrow openers.

Common cultural practices were used on all plots except herbicide was applied to alternate plots. Lodging, on the average, was somewhat higher in the plots where the seed was deposited on the surface (without furrow openers) although some individual plots where the furrow openers were used also experienced severe lodging (table 2). Yield differences were insignificant. There was no apparent correlation between the use of herbicide and yield, but lodging was usually more severe in the plots that were not treated. Pull required to move the seeder increased slightly from 12 kg with furrow openers to 13 kg without the furrow openers. Apparently the furrow openers partially support the main float above the paddy surface.

Additional testing will be conducted to determine the effect of heavy rain on the two planting systems. Also possible design changes to reduce pull and provide means for anchoring the seed to the soil surface will be investigated.

Power Tiller Survey

A survey of power tiller owners, water buffalo owners, and tiller dealers in Laguna and Nueva Ecija Provinces of the Philippines was conducted during the last half of 1976.

Survey results will help answer questions on the: nature and degree of tiller utilization, yield and income; problems related to service, performance, and credit; and future tiller performance and feature requirements.

Preliminary results of the owner survey in Laguna and dealer survey in Laguna and Nueva Ecija are discussed in this report.

Seventy percent of the power tiller owners interviewed in Laguna are members of the farmer's organization, "Samahang Nayon", and 51 percent have holdings ranging from 1.0 to 3.0 hectares. One-half of the farmers are lessees. Eighty-four percent of farms are gravity-irrigated and produce two rice crops per year.

A significant number of IRRI-designed tillers are scattered throughout Laguna but imported units are more widely used. The concentration of brands in particular areas is attributed to conditions for which the particular brand is best suited (farmers with deep fields prefer lightweight tillers and vice versa). Farmers cited durability, power, lower acquisition cost, and first brand introduced in the area as major reasons for buying a particular brand.

Sixty-two percent of the tiller owners bought their machine between 1970 and 1976. The majority paid installment and were financed either through banks or from farmers' resources. Forty-nine percent engage in custom work from which they gross $700 to $2000 annually.

Tiller features desired by farmers are:

1. improved handling and maneuverability
2. increased reliability
3. provide basic repair tools, manual, and extra belts and spark plugs with the new tiller
4. improved spare parts availability

Seventy-three percent of the water buffalo owners interviewed in Laguna are members of the "Samahang Nayon". About 67% have farm sizes ranging from 1.0 to 2.0 hectares. Forty percent are lessees and 20% share-tenants. Almost all farms are gravity irrigated and grow two rice crops annually.

The purchase price of their animals ranged from $27-270 and were acquired at an age of 2 to 15 years and have a present value of $205-2,330. The present value may include offsprings. Length of service to their owners ranges from 1 to 20 years. Eighty percent reported using the animal exclusively for agriculture. Half of those interviewed do custom work and gross $20-540 annually.

All reported problems with the ownership and use of water buffalo. These include: nuisance in the care and maintenance of the animal, feed procurement, cannot be used in deep fields, and slow, weak, and susceptible to disease. Animal care requires two to six hours per day. The majority reported problems in hiring tillers. High cost and lack of cash, unavailability during peak planting season, tiller bogging, and poor quality of land preparation were cited.

Farmers' reasons for not buying tillers are lack of capital, small farm size, cost of repair and maintenance, lack of knowledge and experience in using machines, and old age, and difficulty in applying for a loan.

Most of the tiller dealers interviewed began operation during the 1974 to 1976 period. Some started as machine shop operators, dealers of other agricultural machines, and/or fertilizer and chemicals. The emergence of dealers during this period is attributed to the start of bank financing programs. This resulted in many new tiller brands, especially in Nueva Ecija. Established dealers in Laguna have been carrying the older brands, which partly explains the high population of these brands in the area. Previous surveys indicate that salesmen and farmers play a significant role in brand advertising.

Imported brands are popular because of durability and power, and local brands because of low price. A dealer often promotes one or two brands which have a good image among farmers or whose manufacturers give liberal credit terms.

About 90% of sales are cash, and the remainder by installment. Almost all sales are financed by banks. Dealers prefer financing by one particular bank because of its liberal credit terms and higher price ceiling which allows more profit.

Problems encountered by dealers in marketing tillers are: financing, due to temporary moratoriums by banks on processing loan applications and general delays in loan processing; lack of capital by farmers who cannot meet requirements set by the bank; unpaid installment sales; slow delivery of units and engines from suppliers; dishonest salesmen and high salesman turn-over when incentives are low; people posing as dealers who obtain a downpayment from farmers for a tiller that is never delivered; poor appearance of local tillers compared to imported units and competition among dealers.

Services offered by dealers include field demonstrations (especially for newly introduced models), pre-delivery inspection, training or instruction for farmers, and warranty of service and parts for 6 to 12 months after purchase date.

6-8 HP Tiller Tests

The new tiller design, described in the Design and Development Section, is being evaluated on a dynamometer and in the field. The dynamometer was built to test the durability of tiller transmissions under controlled conditions (fig. 24) while field tests will evaluate performance and endurance under actual operating conditions.

The transmission was dynamometer tested at an input load of 4.3 hp for 250 hours with no failures or serious problems. Chain elongation was used as one criteria of durability because it is generally accepted that effective chain life ends at 3% elongation. The chains in this transmission elongated 0.14-0.20% during the 250-hour test which indicates an effective chain life of 3000-4000 hours at the given loading. In comparison, a current IRRI tiller transmission was tested on the dynamometer for 77 hours at 3.6 hp, resulting in chain elongation of 0.44%. Two or three more transmissions of the new design will be tested on the dynamometer at increasing loads to obtain a good statistical basis for life predictions.

Two units are operating in the field and one has logged over 100 hours. Additional units have been built for an expanded field and laboratory evaluation with gasoline and diesel engines in the 5-8 hp range and under varied field conditions.

Portable Thresher Evaluation

Initial short-run performance tests of the portable thresher showed that it can thresh 540 kg of paddy per hour with threshing and separation losses of less than 2%, which more than meets the design targets of this machine.

Long term performance and endurance testing has started in farmer's fields and will continue. Five threshers are being used by farmer cooperators of Agricultural Engineering, Cropping Systems, and RPTR. The threshers have logged 440 hours. Field threshing capacity ranges from 150-450 kg/hr depending on operating conditions and threshing crew efficiency.

This testing identified some problem areas which have been corrected. The original folding legs that doubled as carrying handles proved difficult to change from one mode to the other so fixed legs were substituted and removable metal pipes now serve as handles. The wire mesh concave could not withstand the threshing abrasion and was replaced with a rod design similar to the axial flow thresher. A heavy woven mesh is a suitable substitute where it is available. Heavier gauge sheet metal was specified for the straw thrower housing and the thrower paddles received additional gusseting. These changes increased the total weight to about 100 kg (with engine) but added the necessary durability.

RPTR also used the thresher for sorghum and obtained a threshing capacity of 300 to 450 kg/hr. Farmers were pleased with the performance of the thresher but sorghum buyers and millers require improved removal of the glums from the seed. Thresher improvements will be tested during a joint project with RPTR in threshing 100 ha of sorghum in an applied research experiment in Batangas, Philippines.

Grain Cleaner Tests

A revised prototype of the small oscillating (portable) grain cleaner reported in Semiannual Report No. 21 was performance tested. Capacity of one ton per hour was obtained at a 1.9 cm hopper slide valve opening with paddy of 90% purity and 23.7% M.C. The cleaned grain purity was 92.76% and 94.54% at blower air inlet adjustments of close and open, respectively. Grain loss was less than 0.20% in both cases.

Some operational problems were encountered during the tests and modifications to correct these were incorporated in the redesign described in the Design and Development Section of this report.

Endurance and performance tests were conducted on the redesigned cleaner. Paddy threshed by the portable thresher (86.26% purity and 23% M.C) was used for the performance tests. A capacity of one ton per hour was obtained with grain purity increasing 5 to 9 percentage points, depending on feed rate and windboard adjustments. Losses were less than 0.5% in all tests. Operational problems encountered during the performance tests and screen fatigue failures after 353 hours of endurance testing were referred to the design section for analysis and modification before further testing.

Modifications of the large oscillating grain cleaner previously tested (Semiannual Report No. 21) were made to reduce costs while maintaining or possibly improving performance. Modifications include: simplified frame and feeding mechanism, grain thrower and auger on one shaft, improved bagging system, and a simplified drive belt system (fig. 25).

Test results of this redesign show that capacity is almost two ton per hour with input paddy of 89.9% purity and 11.6% M.C. Cleaned grain purity and loss were 92.8% and 2.9%, respectively, with the air inlet to the blower fully closed. With the air inlet fully open the cleaned grain purity and losses increased to 96.1% and 13.9%, respectively. The machine was endurance tested for 750 hours resulting in some component failures. The machine is now being modified after which testing will continue.

Table 2. Results of using multihopper seeder with and without furrow openers.

Plot	Herbicide Applied	With furrow openers		Without furrow openers	
		Yield (kg/ha)	Lodging (%)	Yield (kg/ha)	Lodging (%)
1	Yes	5050	30	4730	75
2	No	4810	30	5020	90
3	Yes	4010	0	4750	10
4	No	3970	5	3710	50
5	Yes	4240	5	4030	40
6	No	4620	85	4130	10
7	Yes	4750	25	5480	10
8	No	3830	90	4720	60

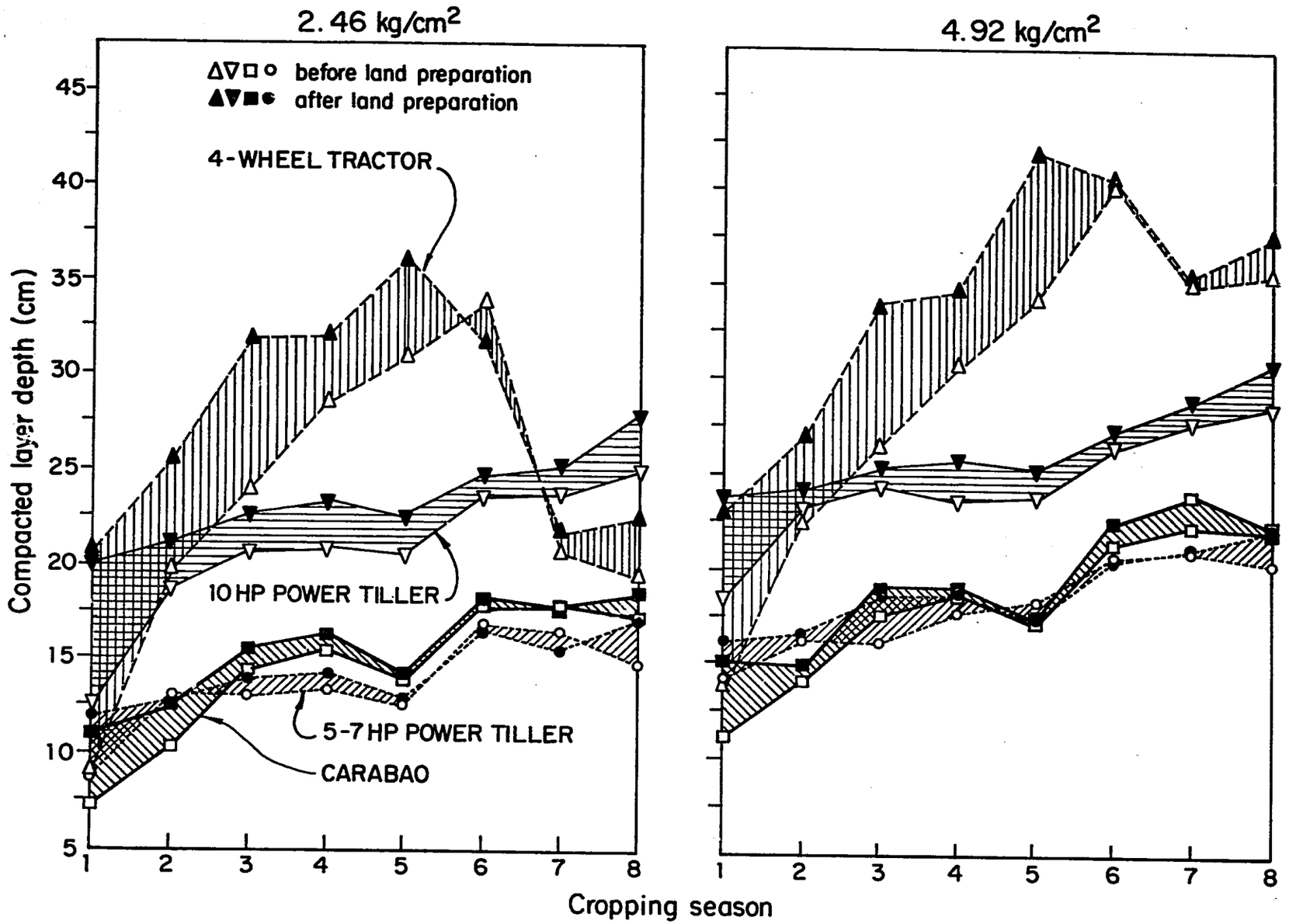

Fig.23 Compacted layer depth under different tillage systems.

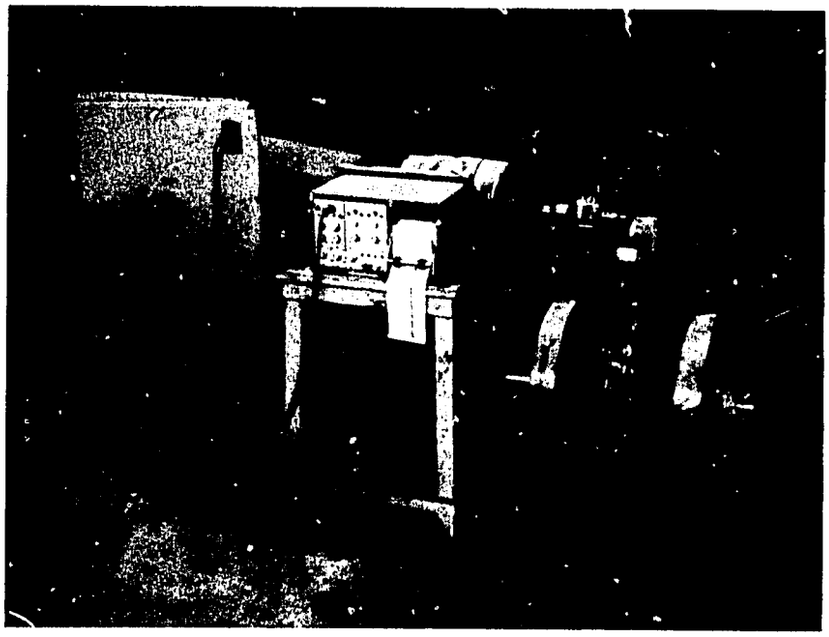

Fig. 24 Transmission dynamometer.

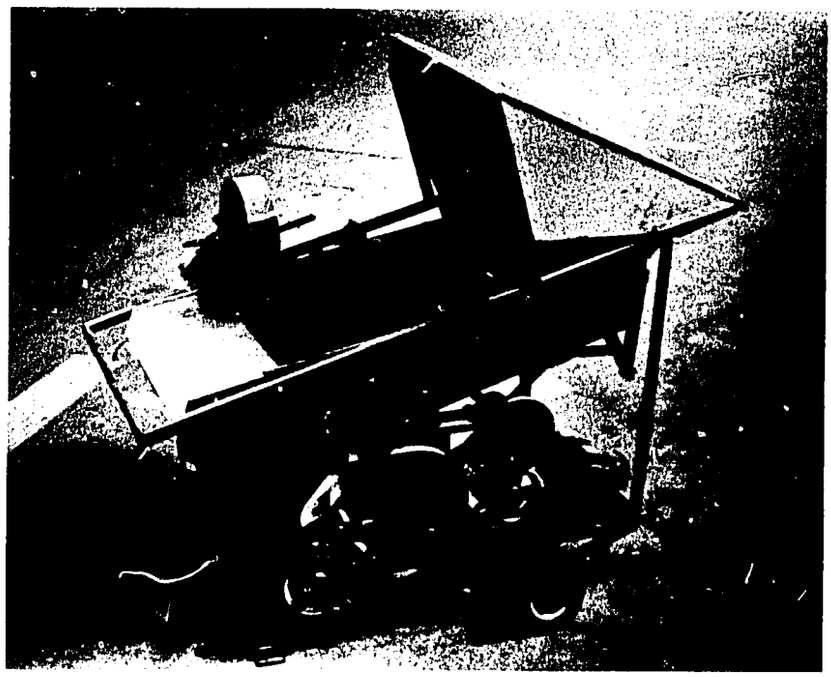

Fig. 25 Large oscillating grain cleaner.

MECHANIZATION SYSTEMS

IRRI-UPLB-BRBDP Rice Post-Production Technology Project

The study is a joint project of IRRI Agricultural Engineering, the Department of Agricultural Process Engineering and Technology of the University of the Philippines at Los Baños (UPLB), and the Bicol River Basin Development Program (BRBDP). This study is being conducted in the Bicol area covering most of Camarines Sur and part of Albay provinces. The project aims to generate benchmark data on existing rice post-production practices and technology and determine the technical, economic, and social implications of introducing and using improved post-production systems.

The study is divided into two phases. The farm study focuses on the efficiency and economic performance of alternative systems of harvesting, threshing, cleaning, drying, and milling paddy to measure the quantitative and qualitative losses which occur at each operational stage. The mill study will evaluate the technical performance and economic viability of local mills; install, demonstrate, and monitor a number of selected mill level systems not currently used in the area; and determine the technical, economic, and social acceptability of the systems.

IRRI is responsible for the farm study. Farmer groups such as the Samahang Nayon (SN), Irrigation Association, and Compact Farms cooperate in testing these alternative post-production systems. IRRI axial-flow threshers and twin-bed batch dryers are used in the trials. An agreement is signed by the officers of the farmer association, the manager of the association's marketing agency, and representatives of IRRI, UPLB, and BRBDP, in which BRBDP sells an axial-flow thresher and twin-bed batch dryer to the farmer's association. Payment for the machine will come from fees charged to their members and other users of the equipment.

A farmer association is considered for the project if it has at least 50 hectares of double-cropped and irrigated rice land, financially capable, willing to cooperate, has strong leadership and unity, is accessible and has electricity, and is not saturated with government or private projects.

The first farm trial was conducted with the San Miguel-del Rosario Samahang Nayon of Libon, Albay. The association has 176 members whose farm sizes range from two to four hectares. Only three farmer-cooperators were recruited for the field trials because most farms had been harvested. Twenty-five plots were included in the experiment with one to three plots per system per cooperator. About 300 paddy samples have been collected for laboratory milling and analysis.

Four combinations of technology and management were used in the above trials (fig. 26). System I is the traditional technology commonly used by farmers in the area. Threshing was entirely manual using flail

or stick and manual treading. Threshed paddy was then sun-dried prior to storage and milling. System I acted as a control for comparison with the other systems.

Manual threshing was also used in System II, but a twin-bed batch dryer was used to dry the paddy. System III used the axial flow-thresher and sun-drying. System IV is the improved system where the axial-flow thresher and twin-bed batch dryer are used.

Crop-cut samples were taken in each system to measure potential yield. Additional yield assessments were made following threshing and following drying to obtain actual yields. Paddy samples were also taken at each stage of the operation sequence to determine changes in quality resulting from using particular treatments. The National Grains Authority laboratory in Ligao, Albay was used to determine paddy quality and milled rice characteristics. All yield and weight measurements were corrected for moisture content and impurities. As a supplement to laboratory milling, commercial milling was performed on the paddy obtained from the field trials. A cono mill and a kiskisan mill that are used by farmer-cooperators in the area were used in the test.

Labor employed in each operation of the individual systems, costs incurred, and the time required to complete an entire sequence of operations were recorded. Quantitative and qualitative measurements necessary to calculate relative benefits and costs for each system were also taken.

To support the farm trials, a survey was conducted among 50 members of the San Miguel-del Rosario Samahang Nayon. The interviews asked questions on post-production practices and problems, attitudes and preferences in milling and processing, equipment used by farmers, and his participation, expectations, and evaluation of farmer's associations and rural development programs of the government. Production and disposal data were also taken to determine the availability and size of marketable surplus.

UPLB conducts the mill demonstration and applied research trials involving seven alternate systems of mill operations (table 3). The measurements taken in each operation for all systems are presented in Table 4.

Comparative performance tests will be conducted during the wet and dry seasons. About 30 tons of homogenous paddy will be used per season and should be of one variety, threshed by the same thresher, dried in a UPLB flat-bed dryer, and stored in bags. The paddy will be divided into two lots so two trials can be made for each mill system. The lots will be subdivided into seven lots for the seven milling systems.

For the wet season trials, 35 tons of IR-36 has been procured, dried, and milled in the seven milling systems. Before the milling tests, milling degree was established according to the specifications of the National Grains Authority for second class milling. This was done in the laboratory using the "thousand grains" method and a whiteness meter. The

results were used to calibrate the rice mills so the whiteness number of the milled rice will equal that of the laboratory sample. This was done to eliminate possible bias resulting from differences in milling degrees. In the trial runs, a portion of the same paddy was used to: flush previous lots of paddy, fill empty spaces, calibrate the rice mill to desired milling degree, and determine if the rice mill was in good condition.

The milling potential of the paddy samples was determined by use of a laboratory mill. Samples were analyzed using the criteria established by the Philippine Grades and Standards. Milling potential for each paddy lot was replicated three times. Mill output from each system is analyzed in the laboratory to assess rice quality and overall evaluation of technical efficiency is based on hulling efficiency, head rice recovery and total milled rice.

Social and economic acceptability of these mills will be evaluated through surveys and regular monitoring of operations and other related activities of sample mills. Rice mills for the survey will be selected from existing mills in the Basin area using stratified systematic random sampling, stratified according to type and 12-hour milling capacity.

Potential for Mechanizing Upland Cropping Operations

Semiannual No. 22 briefly described upland cropping conditions in the Philippines. The 100 farmers in the study mentioned weed control, planting, land preparation, and harvesting-threshing as the most critical operations in the upland cropping sequence.

Fig. 27 contains the cropping calendar for the aggregate sample and the total labor requirements for each crop. Because the farms were small, averaging 1.9 hectares, and there was no irrigation to supplement rainfall, timing of operations was a major concern. The juncture of one crop with succeeding crops resulted in high peak labor requirements. These intervals were most critical between the wet and dry seasons when available soil moisture was decreasing and farmers were attempting to establish the dry season crops.

Table 5 indicates the source and level of labor required for a number of upland crops. It is apparent that the farmer and his family supply most of the required labor. With the exception of harvesting and threshing, most operations generally use only small amounts of hired labor.

Much of the labor for land preparation and planting is from family sources and farmers traditionally rely on hired labor to carry out harvesting and threshing. Most felt this heavy dependence on hired and family labor constitutes a major impediment to further cropping intensification. The coincidence of harvesting-threshing and land preparation on many farms in the same community limits the supply of hired and exchange labor.

Farms were small but intensively cropped (table 6). Batangas farmers averaged 190% intensity, growing an average of seven crops per year. Laguna farmers grew only three crops, but overall intensity was 170%. Cropped area was used mainly for rice, corn, garlic, and gourd crops (fig. 28). Annual labor inputs were high (table 6), both on a per hectare and a per farm basis.

Weeding was considered the most serious problem by farmers in the survey. Inability to control weeds made land preparation and crop establishment difficult and the resulting yields were low. Weeds compete with crops for available moisture, solar energy, and plant nutrients. Fertilizer on upland crops must be accompanied by effective weed control to be profitable. Farmers also recognized that a seeder permitting between row and inner-row spacing would allow more effective weed control with both chemical and mechanical methods.

All farmers own and use water buffalo for land preparation. Plowing alone requires 11 days per hectare with considerable variability depending on the season and the crop being planted. Fifty eight percent of the farmers expressed interest in an improved power source, indicating the high cost of animal maintenance combined with low efficiency make this a relatively expensive technique of land preparation.

Information from the survey will be further refined to develop more precise descriptions of the type and characteristics of weeding, land preparation, seeding, and harvesting-threshing technologies to improve the efficiency and output.

Sequential Farming Systems

Semiannual Report No. 21 outlines the concept of a sequential farming system. The goals of this method are to minimize extreme variability in the use of labor and equipment, to minimize the fixed cost components of machinery investments by expanded utilization, and to maximize production on available land through minimum turnaround times and efficient systems management.

Sequential farming emphasizes the ability to schedule tillage, planting, harvesting, and threshing operations to take advantage of a fixed labor supply. This method requires a high degree of water control and crop management. Conversely, it embodies the potential to produce up to four crops per year with a high degree of labor utilization.

The study has three major objectives:

evaluate the effect of planting-harvesting frequencies on labor and power requirements

determine the optimal-sized operation with a water buffalo, hand tractors used in conjunction with various harvesting-threshing

combinations, and four-wheel tractors used with alternative harvesting-threshing combinations

assess the impact of various levels of irrigation management and control on the effectiveness of the sequential farming method

A series of case studies have been made of traditional, partially mechanized, and fully mechanized farms. Table 7 shows the input requirements under each of these systems. Table 8 contains a detailed disaggregation of labor requirements for each method by operation. By plotting the labor profile for the three methods, the seasonal peaks which characterize traditional systems are partially alleviated using the sequential system. Cropping intensity is higher and income and resource utilization and productivity also increased significantly.

The conditions under which the sequential system can be generally or partially generalized to major rice growing environments will be investigated, including a specific assessment of the power and labor augmenting technologies necessary for successful implementation.

Table 3. Alternative mill-level post-production systems.

System	Pre-cleaning	Hulling	Husk Aspiration	Whitening	Refining
I[1]	None	Engelberg	Air trap	Engelberg	Leather polisher
II[2]	Scalper-sieve	Stone-disc	Air trap	Cono	Leather polisher
III[3]	Scalper-sieve	Rubber roll	Aspirator	Abrasive friction	Leather polisher
IV[4]	None	Rubber roll	Air trap	Engelberg	None
V[5]	Sieve	Stone-disc	Air trap	Engelberg	None
VI[6]	None	Rubber roll	Aspirator	Friction whitener	None
VII[7]	None	Engelberg	Air trap	Engelberg	None

[1]One pass system (local Engelberg)

[2]Conventional cono type rice mill

[3]Japanese multi-pass rice mill (Satake)

[4]Rubber roll huller-Engelberg whitener rice mill (BRBC proposed mill)

[5]Stone-disc huller-Engelberg whitener mill

[6]One pass Japanese rice mill (Kyowa)

[7]IRRI improved Engelberg

Table 4. Measurements to be performed in each mill system.

Pre-cleaning	Hulling	Husk Aspiration	Whitening
Moisture content	Brown rice	Losses in sound grains	Head grains
Crack ratio	Broken grains	-	Broken grains
Dockage	Dimensions	Losses in immature grains	Brewer's rice
Weight/1000 grains	Hardness	-	Dimensions Milling degree

Table 5. Selected crop labor requirements by task and source for 100 upland farms, Philippines, 1975.

Crop	Operation	Source of labor: Operator	Family	Hired	Exchange	Total
Rice	Land preparation	29.4	2.1	1.1	.1	32.7
	Planting	2.3	1.4	.2	.1	4.0
	Weed control	14.3	20.3	3.9	2.4	40.9
	Pest & disease control	.7				.7
	Fertilizer application	1.3	.1			1.4
	Harvesting	.1	1.3	35.2	1.0	37.6
	Threshing		1.9	12.8		14.7
	Cleaning	1.4	.2	1.8		3.4
	Hauling	.9		2.8		3.7
	Total	50.4	27.3	57.8	3.6	139.1
Corn	Land preparation	18.0	1.9	3.3	1.7	24.9
	Planting	2.8	3.5	3.8	1.4	11.5
	Weed control	8.7	.5	1.0		10.2
	Pest & disease control	1.2				1.2
	Fertilizer application	2.5	3.2	.2	.1	6.0
	Cultivation	4.6	.1	.1	.1	4.9
	Harvesting	2.6	3.4	1.0	1.2	8.2
	Husking	1.2	2.8	7.0	1.2	12.2
	Preparation for market	1.1	2.2			3.3
	Hauling	1.4	.9		.2	2.5
	Total	44.1	18.5	16.4	5.9	84.9
Garlic	Land preparation	15.3	1.7		4.4	21.4
	Planting				103.2	103.2
	Weed control	5.3	11.2	18.3		34.8
	Fertilizer application	.7			.4	1.1
	Harvesting			31.5	3.4	34.9
	Preparation for market			30.7	12.3	43.0
	Hauling	3.9	.5			4.4
	Total	25.2	13.4	80.5	123.7	242.8
Sponge Gourd	Land preparation	8.7				8.7
	Planting	1.1	.7			1.8
	Weed control	9.9	22.8	2.2		34.9
	Pest & disease control	2.3	5.9			8.2
	Fertilizer application	2.7	.6			3.3
	Cultivation	8.5				8.5
	Harvesting	29.5	27.3			56.8
	Hauling	2.9	.3			3.2
	Setting Poles	4.9	1.1			6.0
	Total	70.5	58.7	2.2		131.4
Bottle Gourd	Land preparation	2.9				2.9
	Planting	57.8	6.9			64.7
	Weed control	41.3	40.4			81.7
	Pest & disease control	15.7				15.7
	Fertilizer application	10.6	.3			10.9
	Cultivation	5.0	1.3			6.2
	Harvesting	57.1	19.0			76.1
	Total	190.4	67.9			258.3
Egg-plant	Land preparation	21.0	3.7	2.3		27.0
	Planting	7.1	4.4		6.0	17.5
	Weed control	17.5	22.1	3.4		43.0
	Pest & disease control	13.5	.5			14.0
	Fertilizer application	5.7	2.2			7.9
	Cultivation	8.1	.8			8.9
	Harvesting	34.9	48.4		3.8	87.1
	Hauling	5.9	6.2			12.1
	Total	113.7	88.3	5.7	9.8	162.4
Sweet Potato	Land preparation	25.4	6.1	.1	.5	32.1
	Planting	14.4	31.9	12.5	3 8	62.6
	Weed control	3.0	11.5		3.4	17.9
	Fertilizer application	1.8	1.0	.1		2.9
	Cultivation	6.5	.7			7.2
	Harvesting	3.5	2.0	.2	1.8	7.5
	Preparation for market	1.1	23.7		3.4	28.2
	Hauling	2.7	.6	.1		3.4
	Total	58.4	77.5	13.0	12.9	161.8
Cassava	Land prepartion	12.5				12.5
	Planting	1.3	36.2		29.5	67.0
	Fertilizer application		6.0			6.0
	Cultivation		2.0			2.0
	Harvesting		16.0			16.0
	Total	13.2	60.2		29.5	103.5
Peanut	Land preparation	37.2				37.2
	Planting	4.0	6.6		4.1	14.7
	Weed control	10.0	7.5			17.5
	Cultivation	8.0				8.0
	Harvesting		8.0			8.0
	Threshing		8.0			8.0
	Total	59.2	30.1		4.1	93.4
Mung-bean	Land preparation	25.2	4.5			29.7
	Planting	1.0	.3			1.3
	Harvesting	1.6	6.5	3.1		11.2
	Threshing		2.0			2.0
	Hauling	.2				.2
	Total	28.0	13.3	3.1		44.4

Note: All labor requirements in man-days per hectare.

Table 6. Average farm labor requirements for selected upland crops, 100 farmers, Batangas and Laguna, Philippines, 1976.

Crop	Batangas hectare	Batangas man-days	Laguna hectare	Laguna man-days
Rice	1.26	175	1.44	208
Corn	1.03	88	1.48	132
Garlic	.24	58		
Sponge Gourd	.35	46		
Bottle Gourd	.27	70		
Eggplant	.20	43		
Sweet Potato			.66	107
Annual total per farm	3.35	480	3.58	447

Table 7. Comparative production costs for three rice farming systems, 1976.

Item	Sequential	Typical	Japanese
		$/ha	
Variable costs:			
Fertilizer	40[1] (16)	31 (12)	46[4] (14)
Chemicals	40 (16)	16 (7)	82 (25)
Seeds	10 (4)	16 (7)	5 (1)
Fuel	6 (2)		
Operational Costs	3 (1)		
Irrigation Fee		4 (1)	
Electricity[5]			54 (7)
Miscellaneous			34 (11)
Subtotal	99 (39)	67 (27)	221 (68)
Farm Labor			
Irrigation	16 (6)	7 (3)	7 (2)
Land Preparation	20 (8)	40 (16)	14 (4)
Seed culture & Preparation	2 (1)	2 (1)	3 (1)
Transplanting	12 (5)	10 (4)	44 (14)
Fertilizer Application	5 (2)	- *	4 (1)
Weeding	5 (2)	1 *	1 *
Harvesting & Threshing	29 (12)	20 (8)	10 (3)
Drying - Solar	55 (22)	84 (33)	16 (5)
- Artificial	5 (2)		
Hauling	2 (1)	19 (8)	7 (2)
Subtotal	151 (61)	183 (73)	107 (32)
Total Variable Costs	250 (100)	250 (100)	328 (100)
Fixed Costs:			
Administrative Labor			
Monthly Wages	11	1	
Depreciation	12[2]	8	
Interest on Investment	30[3]	84	145
Land Rent			
Medical Expense			27
Utilities			34
Total Fixed Costs	53	93	206
Total Cost	303	343	534

[1]Average of 2 wet seasons.

[2]Computed on a 3-year life straight line depreciation for equipment inventory of the farm.

[3]12 percent on total variable expenses.

[4]Refers to average cost for 4 crops.

[5]For irrigation pump and dryer.

* Less than 1 $.

Note: Figures in parenthesis are percentages of total variable input.

Table 8. Comparative annual labor requirements per operation for three rice production systems.

Task	Sequential[1]	Typical[2]	Japanese[3]
		man-days/ha/crop	
Irrigation	5	8	26
Land Preparation	14	20	50
Seed Culture & Preparation	5	6	12
Transplanting	22	21	162
Fertilization	8	3	16
Chemical Application	5	4	4
Weeding	42	27	36
Harvesting & Threshing	50	64	62
Hauling	1	3	25
Total	152	156	393

[1]2.5 crops per year.

[2]2 crops per year.

[3]4 crops per year.

PILOT PROJECT

FARM LEVEL POST PRODUCTION SYSTEMS

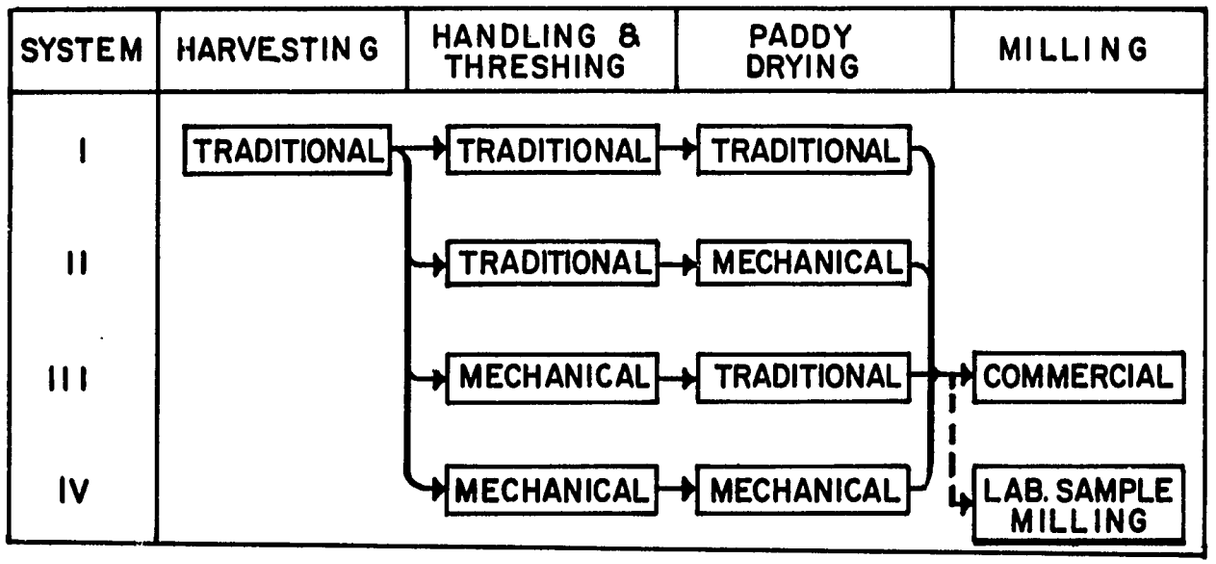

MEASUREMENTS (for each system)

o Crop cut samples o Paddy samples o Moisture content	o Post threshing output o Paddy samples o Moisture content	o Post drying output o Paddy samples o Moisture content	o Total rice o Head rice o By products

Fig. 26 Farm level post-production systems.

Fig.27 Crop operation calendar and labor requirement for selected upland crops, Philippines, 1975.

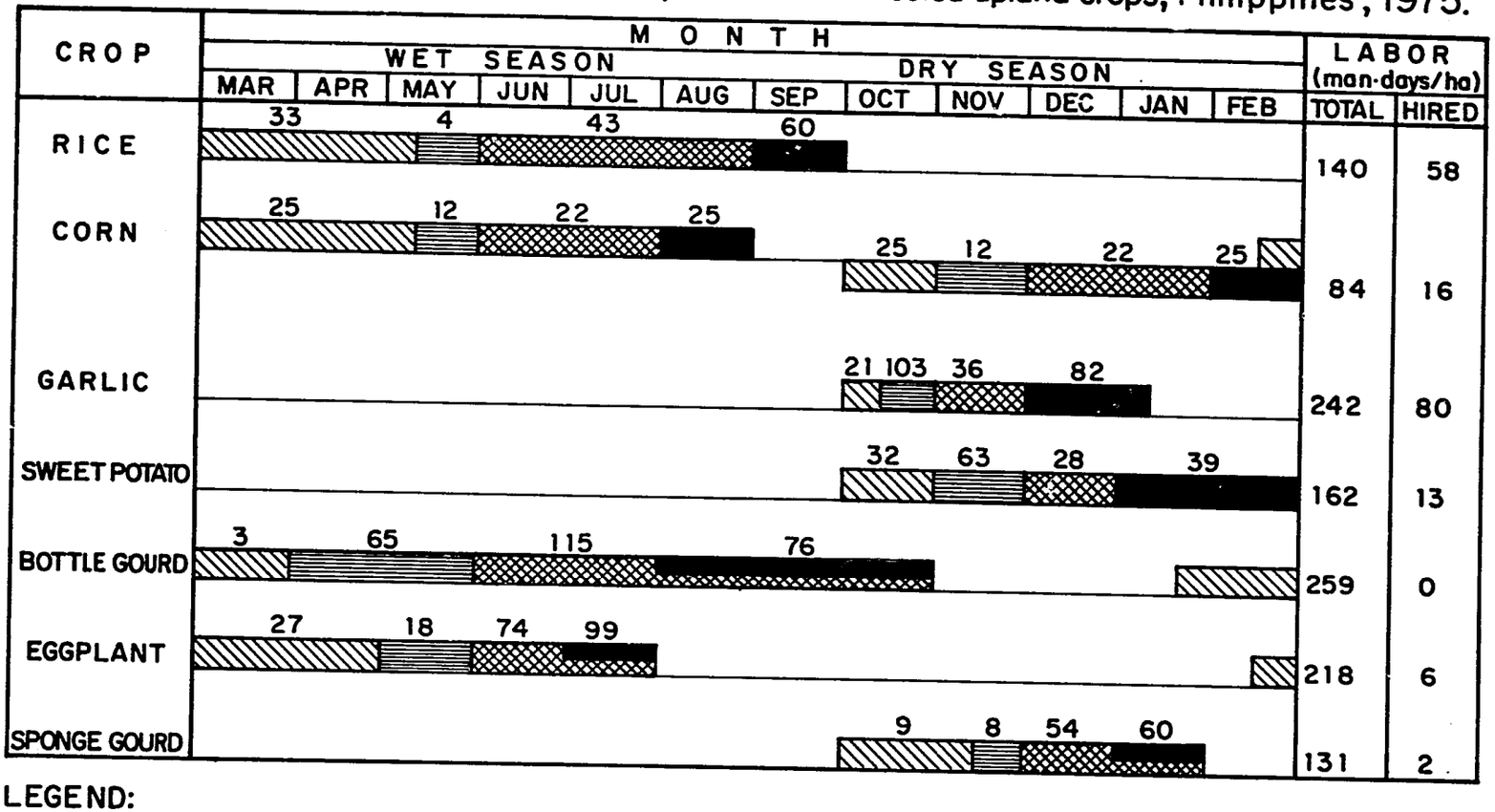

LEGEND:

- Land preparation
- Planting (furrowing, seed gathering, seed preparation, placing poles, etc.)
- Crop care (chemical application, fertilizer, weeding, inter-cultivation)
- Harvesting (harvesting, threshing, cleaning, preparation for market, husking and hauling)

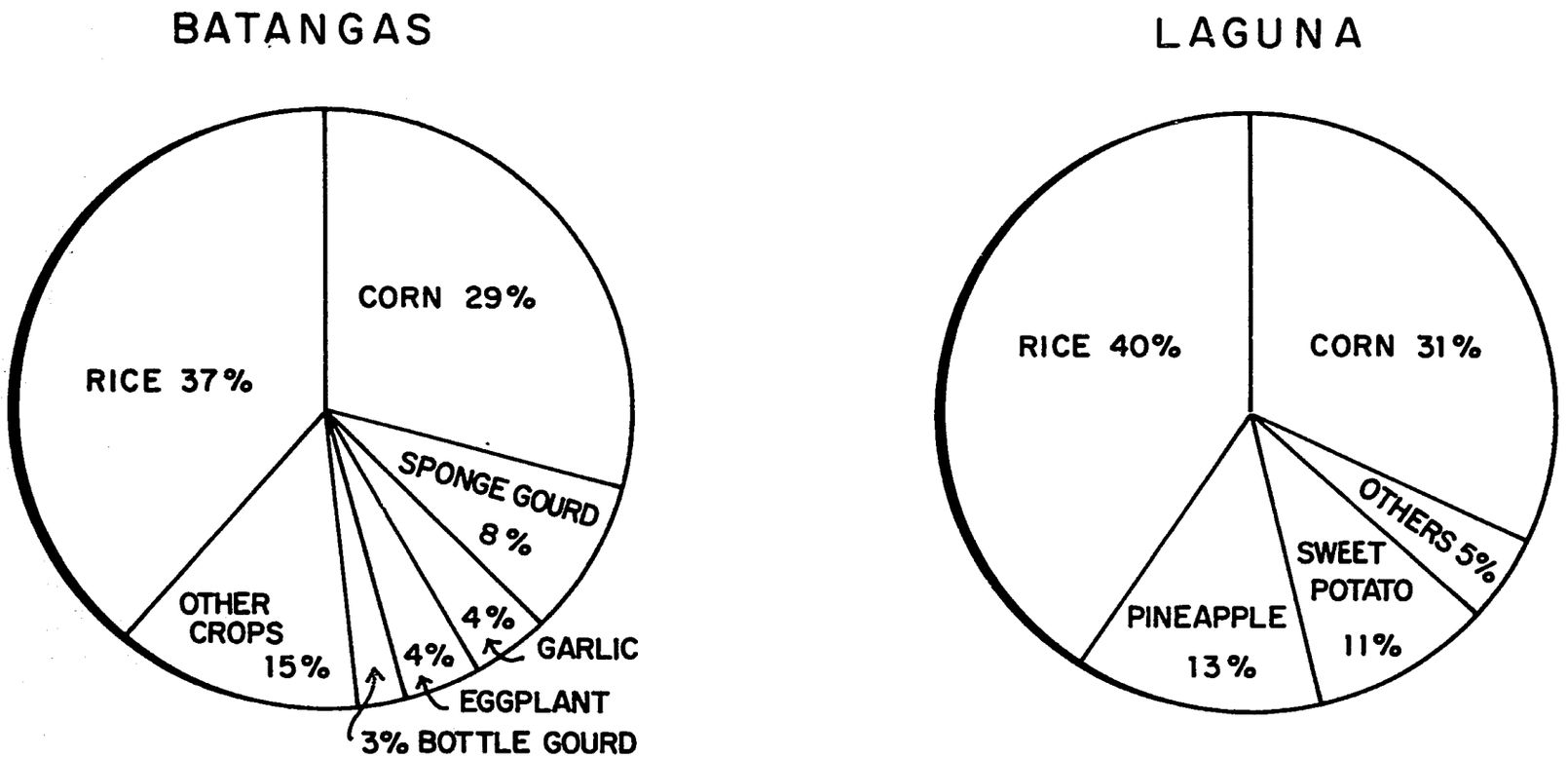

Fig.28 Percent cropped area for 100 upland farms, Batangas and Laguna, Philippines, 1975.

INDUSTRIAL EXTENSION

Introduction

The adoption of IRRI-designed machines continued at an increasing rate during this reporting period. Most of the inertia associated with setting up a new program has been overcome and the increase is expected to continue.

The new USAID-funded industrial extension programs in Pakistan and Thailand have completed setting up their offices and have almost completed staff recruitment. Constraints to the introduction of IRRI designs have been identified in both countries and solutions are being sought. The program based at IRRI in the Philippines has continued in its role of backstopping the efforts of outreach industrial extension projects and providing technical assistance to manufacturers in the Philippines and countries not serviced by other outreach project staff.

An industrial extension subcontract was established with the Bangladesh Agricultural Research Council. This increases the number of subcontract programs to seven.

The personality of each industrial extension project varies, which can partially be explained by the personnel involved, but it is largely due to the age and environment of the project. The newer projects concentrate on evaluating IRRI-design machines in the new environment and establishing contact with prospective cooperating manufacturers. Later, the projects shift to adapting machines to local conditions and promoting the manufacture of these designs. As strong ties are established with manufacturers the program evolves into a partnership between the manufacturer and IRRI, whereby IRRI provides rather specialized technical assistance and the manufacturer becomes more involved in product development, evaluation and testing. The feedback from manufacturers is transferred to other regions with similar problems, but less developed methodology for solving the problems. The projects in Pakistan, Malaysia, and Bangladesh can be characterized at a young stage while the program in the Philippines is relatively mature.

Two issues of the IRRI Farm Machinery Development Program Newsletter, described in Semiannual Report No. 21, were published and distributed during this reporting period. The fourth Newsletter was prepared for publication. Over 400 copies of each issue are being mailed in addition to those distributed by the extension offices in Pakistan and Thailand and by USAID.

Industrial Extension Subcontract Program

The industrial extension office in the Philippines continued to devote considerable effort to subcontract program activities. Due to

the number and widespread locations of these programs, it is becoming increasingly difficult to respond promptly to subcontractors' requests for backup support from IRRI. To alleviate this situation, steps have been taken to transfer the responsibility for supporting and monitoring some subcontracts to the regional offices in Pakistan and Thailand.

The subcontract with G. B. Pant University, which services manufacturers in the northern states of India, will begin working with the project in Pakistan. These projects share a common interest in modifying the axial-flow thresher for threshing wheat.

A new subcontract program with the Bangladesh Agricultural Research Council (BARC) in Dacca became effective November 1, 1976. The project officer is Dr. Kazi M. Badruddoza. The project will be assisted and monitored by the Thailand office with assistance from the IRRI staff at the Bangladesh Rice Research Institute (BRRI), (table 9).

Most of the country programs made good progress as evidenced by the increased number of manufacturers producing IRRI-designed machines and the number of machines produced (fig. 29). Although manufacturers and machine production can be used as an indicator, it does not truly represent the effort required to introduce IRRI designs into a country or region of a country.

Manufacturer's Workshop

A workshop on the manufacture and distribution of IRRI-designed machines was held on July 26 and 27 to discuss problems encountered by the farm equipment industry. The workshop was held at IRRI, Los Baños, and 22 cooperating Filipino manufacturers attended the conference. Representatives from different government agencies and an official of the Agricultural Machinery Dealers Association (AMDA) participated as resource speakers. Government officials represented the Department of Agriculture, Central Bank, Land Bank, National Grains Authority, Department of Industry, UP College of Agricultural Engineering, and the Farm Systems Development Corporation.

The workshop focused on major issues affecting the IRRI program and cooperating manufacturers. Pricing policies, product quality, after sales service, and topics regarding the efficient transfer of IRRI designs were discussed. The Department of Agriculture presented a proposal to establish the Agricultural Machinery Testing Center (AMTEC) and presented a program for rationalization of the power tiller industry in the Philippines. The effectiveness of government and/or commercial policies affecting the development of small-scale industries and the conditions of support available to rice farmers were clarified and analyzed. Feedback from the participants indicate the workshop was a success and the participants found it very informative.

The workshop was effectively used to promote the new portable thresher design. The cost of hosting this workshop was small compared

to what it would have cost to demonstrate the thresher to each participating manufacturer. Fourteen of the 22 manufacturers in attendance requested drawings of the portable thresher, and to date, 13 have fabricated prototypes.

Cost Estimating and Value Analysis

No matter how well a machine performs its desired function, its purchase cost is usually a primary consideration of the potential buyer. This is especially true of the small Asian rice farmer. Engineers in the IRRI Machinery Development Program attempt to develop low-cost machines within the rice farmer's extremely limited buying power. Their success in these efforts is critically important to the success of the Industrial Extension Program. The industrial engineers working on the Industrial Extension Project complement the efforts of the design group by performing cost estimates and participating in the value analysis of IRRI machines.

The cost estimates completed during the previous reporting period were very helpful to cooperating manufacturers and IRRI's design staff in pinpointing high-cost areas. The three previous cost estimates were updated and five more IRRI-design machines were costed (table 10). These cost estimates are also an important tool of value analysis teams.

Value analysis is an organized, systematic, disciplined team effort to accomplish a desired function at the lowest cost without detriment to quality. It is concerned with the analysis and evaluation of existing products or services with the goal of eliminating all unnecessary costs and consequently obtaining optimum value. The concept is relatively new tool of management for increasing profit, and was adopted by big U. S. companies about 1955. Usual cost reduction targets are 10-20% with some cases even higher.

A Value Analysis Team was formed to study two similar flat-bed batch dryers popular in the Philippines. The team is composed of representatives from IRRI, Metals Industry Research & Development Center, and National Grains Authority. IRRI's representatives are an industrial engineer with value analysis experience, a mechanical engineer with machine design experience, and a test engineer with rice processing experience. The objective of the exercise is to lower the cost of this type of dryer. It is expected that the demand for batch dryers will increase substantially in the next few years due to the widespread adoption of continuous cropping systems. The team will also look into the possibilities of using other sources of fuel and increased fuel efficiency, anticipating the rising cost of kerosene.

Manufacturing Cost Reduction Project

It was mentioned in the last report that technical assistance on production management was extended to three cooperating manufacturers in the Manila Area. These companies were revisited to determine the progress they have made in implementing the cost reduction proposals recom-

mended by IRRI. It was found that most of the recommendations have been implemented. In most cases where implementation has not been made the recommendation required a large investment. The manufacturers have not rejected these proposals, but merely put them off to a later date. A fourth manufacturer located in Laguna province was assisted during this reporting period.

Based on the positive feedback from manufacturers on this aspect of the extension program, it was decided to expand the coverage of technical consultancy to other cooperating manufacturers in the Philippines and this service has been offered to cooperating manufacturers in the Visayas and Mindanao regions.

Liaison with Manufacturers in the Philippines

During this reporting period, cooperating companies in the Manila area were visited eight times, three trips were made to the Visayas and Mindanao areas, and one trip was made to the Bicol region.

Seven new manufacturers began cooperating with IRRI. Six of these firms have completed testing and evaluation of their prototypes and have started producing the power tiller, axial-flow thresher, and portable thresher on a commercial basis, while one firm submitted a prototype unit in late December for evaluation by the IRRI testing and evaluation group.

Companies in Metro-Manila were given technical assistance on the fabrication of the improved axial-flow thresher. Four new cooperating manufacturing firms in the Visayas and Mindanao areas were assisted in the testing and evaluation of their power tiller and axial-flow thresher prototypes. Also, they were given technical assistance on production management and manufacturing techniques of IRRI-design machines. While visiting manufacturers in the south, three manufacturers endorsed by the Department of Industry's MASICAP teams were given advice on manufacturing aspects of IRRI designs.

Five companies manufacturing locally-designed power tillers in Naga City, Bicol were visited to survey and identify prospective manufacturers of IRRI machines in that region. Two firms signified their interest to include IRRI-design machines in their product line. Their good shop facilities and established marketing outlets make these companies worthwhile cooperating manufacturers.

Industrial Extension Project in Thailand

The Thai Department of Agriculture completed construction of a 132 sq m office for the project. A sufficient quantity of furnishings and equipment was purchased and installed in the new offices. In addition to the office space, the Thai Department of Agriculture furnished 75 sq m of shop space in their assembly shop which is adjacent to their machine shop. Bench tools and measuring instruments were purchased for the project; however, major pieces of shop machinery was not necessary

since the services of the Division of Engineering's workshop are available to the project.

There have been delays in recruiting a full staff and positions for an engineer and a draftsman still remain open. The Thai Department of Agriculture is giving the project excellent support and one of their engineers, Mr. Chalermchai Suksri, works full-time on project activities. He has experience with windmills and will assist with evaluating the IRRI-design windmill/piston pump in Thailand. Other members of the Thai engineering Department cooperate and help with the project when project activities coincide with their area of interest or expertise. Arrangements are being made for one Engineering Division draftsman to work part-time on the Industrial Extension project.

Efforts have continued to introduce and promote the manufacture of IRRI-design machines. This includes activities such as participating in farm machinery exhibits like that held at the Farm Suwon field day and distributing Thai and English language Newsletters. Extensive travel involving approximately 95 visits to Thai manufacturers has taken place to locate potential manufacturers, demonstrate machines, and provide assistance to cooperating manufacturers. Eleven Thai manufacturers have signed cooperative agreements with IRRI during the reporting period.

The project continues to receive the cooperation of other groups in Thailand who have an interest in agricultural mechanization. The Northern Regional Development Center and Thai-Australia Land Development Project are assisting with the promotion of the IRRI batch dryer. The Industrial Service Institute (ISI) is helping cooperating manufacturers improve their manufacturing techniques. ISI is also investigating the possibility of organizing a course in cooperation with the IRRI project to teach manufacturers to read and interpret engineering drawings.

Effort was directed toward developing the regional thrust of the program. Two visits were made to Nepal to develop cooperative linkages and investigate the possibility of establishing a subcontract program. Selected IRRI-design machines were purchased from Thai manufacturers and crated for shipment to Nepal for evaluation. FAO has assisted the project in promoting IRRI designs in Nepal. Four Nepalese manufacturers have signed cooperative agreements with IRRI during this reporting period.

Major emphasis has been placed on promoting the manufacture of the axial-flow thresher, diaphragm pump, and push weeder in Thailand. Test and evaluation activities have dealt primarily with the portable thresher and power weeder.

Industrial Extension Project in Pakistan

In spite of some initial difficulties, considerable progress has been made during the reporting period in setting up the project facilities and introducing IRRI machines to companies in Pakistan. The IRRI-PAK Agricultural Machinery Program office at Rawalpindi has been adequately

equipped and is fully operational. A 60 sq m metal-working shop has been set up next to the office and is equipped with a lathe, drill press, electric and gas welders, bench grinders, portable drills and hand tools. The present combined IRRI and ARC staff consists of two mechanical engineers, three agricultural engineers, three mechanics, and three office and clerical staff. The Agricultural Engineer and Deputy Agricultural Engineer positions on the ARC staff are still open, but are expected to be filled soon.

Considerable difficulties were encountered in project implementation because shipments of shop machines and other equipment from the Philippines were held for five months by Karachi customs. During this period modifications and fabrication of IRRI prototype machines were undertaken at private machine shops in the Rawalpindi area which was rather time consuming. Unusual delays were also experienced in acquiring a pick-up truck. This created logistical problems, particularly in the field testing of machines. A right-hand drive pick-up truck was acquired from the local market on November 8, 1976.

Manufacturers' response to the IRRI axial-flow thresher has been encouraging. Five local companies have fabricated prototype threshers. A total of nine Pakistani manufacturers were given engineering drawings of IRRI machines. Six have already completed prototypes and are planning to start commercial production for the next cropping season. Prototype units of the IRRI portable thresher, liquid chemical applicator, and diaphragm pump were fabricated by local companies. These are being evaluated, modified, and demonstrated by the project staff.

Contacts were established through personal visits with most established manufacturers of agricultural machines in Pakistan. Periodic newsletters, participation in exhibitions, seminars and demonstrations were utilized to publicize the IRRI-PAK program and its machines to public officials, manufacturers, and farmers in many parts of the country.

The IRRI-PAK program participated in an exhibition of farm machines that was held for the Prime Minister of Pakistan at Mandi-Baha-ud-din, Punjab, and a farmer fair at Rawalpindi. Several IRRI machines were demonstrated at a farmer fair at the Rice Research Institute, Kala Shah Kaka. A number of demonstrations were also held in rural areas to evaluate farmers' reaction to IRRI machines and to gain a better knowledge of their machinery requirements. Although considerable interest was shown by farmers in the IRRI axial-flow thresher, the desirability of threshing wheat and paddy by the same machine was a frequent comment during the demonstration. Major program focus is to modify the IRRI thresher to thresh wheat, paddy, and other crops popular in Pakistan.

A survey of medium-size paddy farms, 2-20 hectares, is being conducted in the three major rice growing areas in NWFP, Punjab, and Sing provinces. This survey will evaluate the farm machinery requirements of medium-size farmers who have financial resources but find the cost of imported equipment beyond their means.

Table 9. Industrial Extension Subcontract Program Officers.

Dr. K. M. Badruddoza
Executive Vice-Chairman
Bangladesh Agricultural Research Council
130-C Road 1, Dhanmandi
Dacca-5, Bangladesh

Dr. K. N. Singh
Head, Agricultural Engineering Department
G. B. Pant University of Agriculture & Technology
Pantnagar, Distt. Nainital
Uttar Pradesh, India

Mr. M. M. Suri
President
Suri Research Foundation
B-14 Greater Kailash
New Delhi - 48
India

Mr. R. Dadang Tarmana
Project Officer
Directorate of Food Crops Production
Department of Agriculture
Pasar Minggu, Jakarta
Indonesia

Dr. Sung Kum Han
Director
Institute of Agricultural Engineering & Utilization
Office of Rural Development
Suwon, Korea

Dr. M. Hashim Noor
Assistant Director
Malaysian Agricultural Research and Development Institute
P. O. Box 208, Sungai Besi
Serdang, Selangor, Malaysia

Mr. S. Kathirkamathamby
Superintending Engineer
Engineering Research and Development Division
Department of Agriculture
Peradeniya, Sri Lanka

Table 10. Estimated manufacturing cost breakdown on IRRI-designed machines.

Machine	Direct Labor Cost (1)	Mfg. Overhead Cost (2)	Total DL&OH Cost (3)=(1)+(2) [1/]	Material Cost Fabricated (4)	Material Cost Purchased [2/] (5)	Total Material Cost (6)=(4)+(5)	Total Manufacturing Cost (7)=(3)+(6)
1. Axial Flow Thresher with Rotary Screen	₱ 569.58	₱ 854.37	₱1,423.95	₱1,796.17	₱1,487.50	₱3,283.67	₱4,707.62
2. Axial Flow Thresher with Oscillating Tray	490.44	735.66	1,226.10	1,366.43	1,250.18	2,616.61	3,842.71
3. Portable Thresher	136.54	204.81	341.35	697.65	271.65	969.30	1,310.65
4. One-Ton Batch Dryer	169.34	254.01	423.35	1,231.32	474.89	1,706.21	2,129.56
5. Grain Cleaner	267.44	401.16	668.60	446.80	738.00	1,184.80	1,853.40
6. 5-7 HP Power Tiller	204.42	306.63	511.05	278.07	863.01	1,141.08	1,652.13
7. Diaphragm Pump	37.98	56.97	94.95	151.20	24.36	175.56	270.51
8. Liquid Injector	9.90	14.85	24.75	24.70	28.20	52.90	77.65

US$1.00 = ₱7.35

1/ Direct labor and overhead cost

2/ Excluding engine cost

Table 11. Industrial Extension Project Staff.

Name	Position
Philippines	
John A. McMennamy	Industrial Liaison Engineer
Simeon Gutierrez	Senior Research Assistant
Nemelito Langam	Senior Research Assistant
Rodulfo Angco	Draftsman
Felicisima Barrera	Secretary
Thailand	
P. Stewart Barton	Industrial Extension Engineer
Suwit Bunyawanichkul	Research Assistant
Chalit Choensombat	Technician
Boonsom Sooksamran	Driver
Juthaporn Charoenpravat	Secretary
Pakistan	
Amir U. Khan	Industrial Extension Engineer
Hamid Ayub	Research Assistant
Mohammad Ilyas	Research Assistant
Inayat Ullah Goraya	Secretary

Fig. 29. Number of IRRI-designed machines commercially produced in 1976.

Country	Number of Manufacturers	MACHINES						
		5-7 hp tiller	Axial flow thresher	Batch dryer	Power weeder	Multihopper seeder	Chemical Applicators	Total
India[1/]	5	-	70	-	-	6	-	76
Indonesia	6	72	43	7	-	3	120	245
Japan[1/]	6	-	-	-	24,500	-	-	24,500
Philippines	19	2,586	552	93	-	57	141	3,429
Sri Lanka	3	45	3	-	-	2	-	50
Taiwan	1	-	-	1,000	-	-	-	1,000
Thailand	8	1,053	97	-	-	1	-	1,151
Total	48	3,756	765	1,100	24,500	69	261	30,451

1/ Production for second half of 1976 estimated.

PERSONNEL LIST*

Name	Position
B. Duff	Associate Agricultural Economist & Department Head
D. Kuether	Associate Agricultural Engineer
W. Gunkel	Visiting Agricultural Engineer
S. Mahmud	Visiting Engineer
I. Manalili	Assistant Engineer
J. Policarpio	Assistant Engineer
J. Samuel	Post-doctoral Fellow
J. Arboleda	Senior Research Assistant
N. Navasero	Senior Research Assistant
Z. Toquero	Senior Research Assistant
F. Cabrales	Research Assistant
R. Dayrit	Research Assistant
L. Ebron	Research Assistant
G. Espiritu	Research Assistant
F. Juarez	Research Assistant
L. Kiamco	Research Assistant
C. Maranan	Research Assistant
G. Salazar	Research Assistant
G. Villaruel	Research Assistant
R. Dignadice	Research Aide
F. Jalotjot	Drafting Supervisor
M. Diestro	Draftsman
R. Pabustan	Draftsman
N. Rivera	Office Assistant
J. Reyno	Office Aide
A. Bagalso	Secretary
E. Co	Secretary
L. Bañez	Clerk-typist
E. Dungo	Shop Supervisor
A. Barot	Shop Assistant
Z. Borja	Shop Assistant
A. Camacho	Shop Assistant
M. Castro	Shop Assistant
A. Dizon	Shop Assistant
M. Fabellar	Shop Assistant
C. Flojo	Shop Assistant
E. Macatangay	Shop Assistant
M. Macatangay	Shop Assistant
P. de Mesa	Shop Assistant
M. Salac	Shop Assistant
R. Santos	Shop Assistant
F. de Leon	Field Assistant
L. Villegas	Field Assistant
R. Capule	Laborer
N. Silab	Laborer
R. Tobias	Laborer

*Please see Table 11 for Industrial Extension staff.