AGENCY FOR INTERNATIONAL DEVELOPMENT
WASHINGTON, D. C. 20523
BIBLIOGRAPHIC INPUT SHEET

FOR AID USE ONLY
BATCH 82
ARDA

1. SUBJECT CLASSIFICATION
A. PRIMARY: Science and technology — TC00-0000-G148
B. SECONDARY: Applications--Tanzania

2. TITLE AND SUBTITLE
Workshop on Solar Energy for the Villages of Tanzania; report

3. AUTHOR(S)
(101) National Research Council. Board on Science and Technology for Int.Development; Workshop on Solar Energy for the Villages of Tanzania,Dar es Salaam,1977

4. DOCUMENT DATE	5. NUMBER OF PAGES	6. ARC NUMBER
1978	~~176~~p. 177p.	ARC

7. REFERENCE ORGANIZATION NAME AND ADDRESS
NAS

8. SUPPLEMENTARY NOTES *(Sponsoring Organization, Publishers, Availability)*
(Staff summary rpt.of workshop,53p.:PN-AAE-792)

9. ABSTRACT

Thirty-five Tanzanian and North American experts met in Dar es Salaam in August 1977 to explore how the energy of the sun can be used to improve the lives of Tanzanians. The state-of-the-art of small-scale solar energy devices, including the technical and economic aspects of their use, is reviewed, and short and long range projects using solar devices in villages are suggested. Solar energy includes four major forms: photosynthesis, the continuous cycle of falling water carried to the sea and lifted back by sun powered evaporation, direct sunshine, and wind. The technologies and devices discussed have all been proven in practice and fall into five categories: small-scale hydropower, biogas generation, windmills, photovoltaic power generators, and low-temperature applications. Each technology is described briefly, its applicability to village and household tasks is discussed, and the probable cost of its installation and use are analyzed. Four of the Five technologies discussed are already competitive with the cost of delivering electricity to villages by decentralized diesel generation of electricity. Solar technologies have three advantages: most of them are simple and less complicated to set up and to manage than the transmission and distribution systems in a rural electrical power grid; they are decentralized; and most involve no fuel and a lower component of imported capital than conventional systems. The second half of the document is the appendices and contains the papers given at the workshop.

10. CONTROL NUMBER
PN-AAF-415

11. PRICE OF DOCUMENT

12. DESCRIPTORS
Energy
Meetings
Solar energy
Tanzania
Villages

13. PROJECT NUMBER

14. CONTRACT NUMBER
CSD-2584 GTS

15. TYPE OF DOCUMENT

AID 590-1 (4-74)

CSD 2599 G75
NAS PN-AAT-415

Workshop on Solar Energy for the Villages of Tanzania

Dar es Salaam, Tanzania
August 11-19, 1977

Tanzania National Scientific
Research Council

ERRATA

Page 3, line 13 under No. 2, read Sh 0.75 (in lieu of Sh 75) per kilowatt hour.

Page 3, line 15 under No. 2, read Sh 0.80 (in lieu of Sh 80) from TANESCO.

WORKSHOP ON SOLAR ENERGY FOR THE VILLAGES OF TANZANIA

Held in Dar es Salaam, Tanzania

August 11 - 19, 1977

Jointly sponsored by

Tanzania National Scientific Research Council
United Republic of Tanzania

Board on Science and Technology for International Development
Commission on International Relations
National Academy of Sciences - National Research Council
United States of America

Tanzania National Scientific Research Council 1978

PREFACE

This report is the product of the first seminar/workshop held in Dar es Salaam August 11 - 19, 1977, jointly sponsored by the Tanzania National Scientific Research Council (UTAFITI) and the U.S. National Academy of Sciences (NAS). The seminar/workshop's purposes were (1) to review the state-of-the-art of small-scale solar energy devices, including both the technical and economic aspects of their utilization, and (2) to suggest short- and long-range projects utilizing solar devices in the villages, with particular emphasis on recommendations for implementation.

The seminar/workshop deliberations were complemented by a two-day visit to three coastal villages, Kimbiji, Chengeni, and Kerege, to enable the participants to observe firsthand the energy needs of rural life.

This report, the result of the joint deliberations of the Tanzanian and North American participants, presents a number of short- and long-range applications that could benefit the people in rural Tanzania by utilizing solar energy to assist them with their daily activities.

The recommendations in the report have resulted from the pooled knowledge and experience of all participants and are presented in several chapters that reflect the subject matter discussed by the subgroups of the workshop.

Although this was a joint Tanzanian-American workshop, a number of the topics are, by their nature, better dealt with by Tanzanians, for example, matters relating to the use of Tanzanian Government structures in dealing with solar energy. It is also true of judgments as to which village tasks are to be energized. The American input focused primarily on technical questions.

Clearly, to implement all the recommendations simultaneously would be a task exceeding the skill, manpower, and funds of a country even larger than Tanzania. The workshop participants realize that within the framework of national goals and priorities, government officials must select from all these recommendations those that represent their top priority projects.

The participants would like to acknowledge the generous support of the Building Research Unit and the Institute of Finance Administration of the Government of Tanzania in providing the local facilities in Tanzania; of the UTAFITI for hosting the seminar/workshop and arranging

travel to the three villages, which greatly contributed to the success of the workshop; of the U.S. Agency for International Development (USAID), Technical Assistance Bureau, Office of Science and Technology, for providing support for the travel and staff costs for the NAS panel; and of Dr. Vernon Johnson, USAID Mission Director in Tanzania, and his staff for logistic assistance.

Special thanks are due to Dr. George O. G. Löf, Administrator, Department of Energy, Solar Energy Project, Colorado State University, for the time he spent reviewing the report not only for statistical accuracy but also in terms of solar energy, and to Professor William Hughes, Head, School of Electrical Engineering, Oklahoma State University, for his review of the material on windmills.

Recognition and thanks are also due to the many individuals who contributed long hours and dedicated effort to make the workshop a success.

TABLE OF CONTENTS

PREFACE		iii
TABLE OF CONTENTS		v
CHAPTER I	CHAIRMEN'S FOREWORD	1
CHAPTER II	CONCLUSIONS AND RECOMMENDATIONS	5
CHAPTER III	CURRENT ENERGY NEEDS IN RURAL TANZANIA	7
	VILLAGE ENERGY REQUIREMENTS	8
	ENERGY NEEDS AT THE HOUSEHOLD LEVEL	15
	REGIONAL VARIATION	17
CHAPTER IV	INSTITUTIONAL FACTORS	21
	NATIONAL FUNCTIONS INVOLVED IN ESTABLISHING A VILLAGE ENERGY PROGRAM	22
	RECOMMENDATIONS	24
CHAPTER V	SOLAR APPLICATIONS APPROPRIATE TO THE VILLAGE	26
	BIOGAS GENERATION	31
	WINDMILLS	33
	PHOTOVOLTAIC POWER GENERATORS	36
	LOW TEMPERATURE APPLICATIONS	38
CHAPTER VI	CURRENT CONVENTIONAL ENERGY IN TANZANIA	47
	DISTRIBUTION GRID TO A VILLAGE	47

SMALL-SCALE DIESEL GENERATION 47

CHAPTER VII METHODOLOGY AND IMPLEMENTATION 51

DESCRIPTION OF THE PROBLEM 51

DEFINITION OF DEMAND 51

ANALYSIS OF EXISTING SOLUTIONS 52

FACTORS AFFECTING THE USE OF RENEWABLE SOURCES OF ENERGY IN VILLAGES 52

APPENDICES

A. A. PARTICIPANTS 54

B. AGENDA 58

C. WELCOME ADDRESS 63
-- Hon. Al Noor Kassum

D. RESPONSE TO WELCOME ADDRESS 68
-- James W. Howe

E. COMMENTARY ON ENERGY FOR THE VILLAGES OF AFRICA 73
-- S. R. Nkonoki

F. COMMENTARY ON ENERGY NEEDS IN TANZANIA 80
-- Jeremy Elias Duwe

G. CHARACTERISTICS OF VILLAGE ORGANIZATION TO BE CONSIDERED IN THE USE OF RENEWABLE ENERGY DEVICES 84
-- Priscilla Reining

H. SOLAR ENERGY UTILIZATION AND THE DEVELOPMENT OF THE NEW CAPITAL IN DODOMA 87
-- Douglas H. Lee

I.A PRESENT STATUS OF TECHNOLOGY FOR SOLAR-THERMAL APPLICATIONS 92
-- J. Richard Williams

I.B. REMARKS ON PHOTOVOLTAIC SOURCES 119
-- Brown F. Williams

I.C. PRESENTATION 131
-- Thomas A. Lawand

I.D. U.S. SOLAR ENERGY PROGRAMS 135
-- Norman L. Brown

I.E. UTILIZATION OF SOLAR ENERGY IN FOOD PRESERVATION 138
-- T. W. Maembe

J. VILLAGE CHARACTERISTICS: KIMBIJI, CHENGENI, KEREGE 146
-- Priscilla Reining

K. REGIONAL VARIATION IN ENERGY SUPPLY AND DEMAND 150
-- Priscilla Reining

L. A TECHNICAL COMMENT ON THE PRODUCTION AND EFFICIENT USE OF FIREWOOD 161
-- Priscilla Reining and Adolfo Mascarenhas

M. CLOSING REMARKS 164
-- Peter Mwombela

CHAPTER I

CHAIRMEN'S FOREWORD

This report is the product of 35 Tanzanian and North American experts who met in Dar es Salaam from August 11 to August 19, 1977, worked hard, debated, calculated, refined their calculations, and finally arrived at a consensus. The subject of their labors lies at the heart of the deepest concern of Tanzania: how to help the people in the villages improve their lives. This workshop explored how the energy of the sun--so bountiful in Tanzania--can be used in that process of village improvement.

In a very real sense, economic development throughout history has consisted of finding substitutes for human energy. The wheel, the lever, the steam engine, internal combustion--indeed the whole petroleum age--represent major steps in this substitution process. Yet the majority of people living in rural areas around the world, including most Tanzanians, still must rely largely on human muscle to wrest their daily livelihood from the soil or the sea--to till the land, harvest and process their crops, grind grain, paddle fishing boats, and haul water and wood. They have no lights at night and limited means to preserve food. Until they have more modern energy sources, these villagers can make only limited economic progress.

But the prospects for achieving modern energy technology from conventional resources have been set back by the oil price rises of 1973/1974; the world will soon run short of the oil and gas on which most urban, industrial, and modern agricultural development have become dependent. In the industrialized countries there is increasing awareness that profound and frightening changes are inevitable. There is growing consensus that the course of economic development, which for a hundred years or more has been based on the energy of the sun stores in the form of oil, gas, and coal, will soon begin to deplete these stores of energy and will depend increasingly on the current daily energy from the sun. This is the greatest domestic problem now facing most industrialized countries; indeed, for many of them it is the greatest threat to national security they have ever suffered except in time of war. Consequently, they are beginning to turn in earnest to ways of using the sun for energy.

Tanzania and other developing countries are not as dependent on oil as the industrialized countries. Within the less developed countries, the rural people are the least dependent of all. Fate has often favored

the urban and industrialized areas of the world--and dealt harshly with rural people--especially in tropical areas. Now it is obvious that a petroleum-based infrastructure, until so recently considered a modern asset, will become increasingly obsolescent. But, paradoxically, an established petroleum economy will impede the development of technology to use renewable energy simply because the investments in petroleum-based technology have been so great there will be reluctance to abandon it. Could it be that Fate is beginning to favor the less developed countries, where the energy of the sun is plentiful and where there is virtually no petroleum-based infrastructure to dismantle?

The term "solar energy" as used in this report includes all energy from the sun, which takes four major forms. First, there is photosynthesis, which provides all plant food for animal life on earth, as well as the wood on which villagers are dependent for cooking and crop drying. Second, there is the continuous cycle of falling water carried in streams to the sea and lifted back to the highlands by sun-powered evaporation. The third and most obvious form of solar energy is direct sunshine, used by villagers to dry fish and grain. Finally, the sun, shining in different amounts on different areas of the earth, causes the winds that are used by fishermen and seamen to propel sailboats and by farmers to grind grain.

As participants in the solar workshop, we allowed our imaginations to play freely on the application of solar energy to village life, but we did not allow ourselves to deal with futuristic fantasies and imposed upon ourselves the discipline of working only with existing and proven technologies. For those who have not worked in solar energy, it may come as a surprise to learn that there is already an array of existing devices that can be obtained either from the shelves of manufacturers or by reproducing them locally in Tanzania. The technologies represented by these devices fall into five categories, which are described in Chapter V. In addition, there are other devices, prototypes of which could be built in Tanzania with Tanzanian materials.

The important thing is that the technologies and devices discussed have all been proven in practice. Throughout the conference we kept in mind that the people of the villages--whom we spent two days visiting--are real people whose lives are too important to experiment with. The technologies we considered have proven themselves over and over in other countries, for instance, in China where there are an estimated 4.7 million bio-digesters and 60,000 mini-hydroelectric generators. Indeed, the bulk of the electricity for some three-quarters of the rural communes of China is furnished by mini-hydroelectric generators with an average capacity of about 40 kilowatts, or enough to put a 100-watt light bulb in 400 village homes. The technologies have also been proven in India, where 20,000 bio-digesters are now in operation; in Holland and the plains of North America, where windmills have been vitally linked to development; and in New England, where waterwheels were a major source of mechanical power until cheap oil drove them--along with other renewable resource technologies--out of existence.

What about the cost of these new technologies? Should they not be delayed for more research, or further inflation in the costs of oil, or

the evolution of a mass market to make them cost-competitive with technologies based on conventional energy sources? Surprising to most people, including many workshop participants, the answer that developed at the workshop is "no." According to estimates done at the workshop, four of the five technologies to be discussed are already competitive with the cost of delivering electricity to villages by decentralized diesel generation of electricity. Moreover, the solar technologies have three advantages: first, most of them are simple and some of them are reliable--more so than a diesel engine, which is highly complex--and they are much less complicated to set up and manage than the transmission and distribution systems in a rural electrical power grid. Second, they are decentralized, which fits the spirit and style of self-reliance that underlies the Tanzanian villagization program. Third, most solar technologies involve no fuel and a lower component of imported capital than conventional systems, thus relieving the pressure on Tanzanian foreign exchange reserves.

In a more speculative vein, several additional observations are relevant to the use of solar energy:

1. The cost of conventional energy based on oil is increasing, while there is reason to hope that the cost of certain solar energy technologies will decrease with new developments and with mass production.

2. For most conventional energy technologies, there are two major costs--capital costs of the original equipment and operating costs, especially for fuel. For solar energy there are essentially only capital costs--no fuel costs and only minor maintenance costs. In our conservative calculations (which still gave results competitive with diesel generation and, in a number of cases, with electricity from the grid), we assumed that interest on money for solar equipment would cost 10 percent per year and would have to be repaid during the life span of the equipment. However, in the real world, loans can sometimes be had from the "soft-loan" window of the World Bank for 3/4 of 1 percent with 10 years' grace period (no repayments) and up to 40 more years to repay. Even with the austere 10-year, 10-percent assumptions, electricity could be produced for as little as Sh. 75 per kilowatt hour (in the case of mini-hydroelectric generators) compared with Sh. 2.3 via diesel and an average of Sh. 80 from TANESCO*. If money were available on more generous terms, the advantage would be even more on the side of solar energy.

Finally, a word about the most obvious drawback of solar energy, its intermittency. In the industrialized countries, solar energy solutions are often rejected because there must be a back-up system to meet energy needs when the sun fails to shine or the wind to blow. In Tanzania there are two ways of meeting this problem: the first is storage, either of the energy itself in batteries or of the product of the energy; grain may be ground and water pumped when the sun shines or the wind blows and the grain and water may be stored for later use. The second way of meeting the problem is to rely on previously existing energy sources as the back-up system. Thus, if the wind fails to blow for a week, water will have to be carried; and if the sun fails to shine on a fish drier, the fish can be smoked over a wood fire. In Tanzania, the

*Tanzania Electric Supply Company.

back-up system will be to resort to the traditional energy source for a brief period until the solar energy returns.

This is the first time the U.S. National Academy of Sciences has held a joint workshop with a developing country on solar energy for the villages. It is also the first such workshop for the National Scientific Research Council of Tanzania. The cochairmen of the workshop paid a visit to the Tanzanian Minister of Water, Energy and Materials, the Honorable Al Noor Kassum, to report on the workshop. Echoing the thoughts he expressed at that meeting, we hope that this workshop may be the historic beginning of a process that will not stop until it has brought modern renewable-energy technologies to the villages of Tanzania. We hope that a similar process will unfold in other developing countries. It is fitting that this effort should start in Tanzania, a nation that is almost unique in the world for its commitment to self-reliance and the improvement in the quality of life of its rural population.

The seminar participants expressed great appreciation to the Government of Tanzania, the Tanzanian National Scientific Research Council, and the U.S. National Academy of Sciences for the cooperation that enabled the seminar/workshop to take place. The Tanzanian workshop participants elected nine of their colleagues to form the Provisional Solar Energy Promotion Committee, pursuant to recommendation 5. There was general agreement that more members should be co-opted by the Committee as appropriate, including, in particular, a Tanzanian agricultural economist, a sociologist, and a nutrition expert.

Members of the Provisional Solar Energy Promotion Committee are:

P. Mwombela
S. R. Nkonoki
A. Mzee
D. J. Kavishe
P. A. Msafiri
P. T. Pallangyo
U. S. Nkomo
R. Reichel
J. Duwe
Ex-officio: S. J. Asman.

CHAPTER II

CONCLUSIONS AND RECOMMENDATIONS

During the initial plenary session of the workshop, it was decided to divide the participants into four working groups in order to arrive at specific conclusions and recommendations. These groups focused on: 1) Current Energy Needs and Availability in Tanzanian Villages; 2) Institutional Factors; 3) Methodology and Possible Projects for Early Application; and 4) Short- and Long-term Potential of Solar Energy for Tanzanian Villages. The recommendations of these groups were presented for discussion at the final plenary session.

After appropriate amendments and additions, the following recommendations and conclusions were endorsed:

1. It is recommended that a Solar Energy for Villages Pilot Project (SEVIPP) be established as soon as possible, under the Tanzanian National Scientific Research Council (UTAFITI). There are some solar energy technologies that could be installed and made operational in some Tanzanian villages within a period of three months to nine months from the time a decision is made to utilize such technologies.

2. The technologies recommended, principally on the basis of cost-effectiveness, availability of resources, and long-range power requirements of villagers, are photovoltaic electricity generation, biogas generation, small-scale hydroelectric generation, and solar refrigeration and drying for food and/or crop preservation. These technologies have been singled out, by Tanzanian experts, on the basis of their technical performance in other countries and their applicability to villages.

3. The Tanzania National Scientific Research Council, in planning, implementing, and evaluating the proposed Solar Energy for Villages Pilot Project, should work in consultation and cooperation with the Ministry of Water, Energy and Minerals, the Prime Minister's Office of Regional and District Authorities, and any other relevant institutions such as the University of Dar es Salaam, the Small Industries Development Organization, the Tanzania Electric Supply Company, and the Capital Development Authority.

4. An inventory should be made of the institutions and individuals having particular interest in and/or related to solar energy and other alternative energy systems.

5. A Solar Energy Promotion Committee should be established under the direction of UTAFITI. This committee should take appropriate steps to ensure that the recommendations of the seminar are brought before the

Government of Tanzania and to prepare for the launching and operation of the proposed Solar Energy for Villages Pilot Project, if the government endorses such a project.

6. The proposed Solar Energy for Villages Pilot Project should be implemented in three selected villages in as many agro-economic zones of Tanzania as resources and environmental factors will permit. (Tanzania has seven agro-economic zones.)

7. A scientific methodological approach should be followed in the evaluation and assessment of any conventional and/or renewable energy technique(s) before a final decision is made to adopt or choose a technology.

8. Certain established criteria should be considered in the selection of villages to be included in the proposed Solar Energy for Villages Pilot Project (SEVIPP). These criteria include:

- The village's energy/power needs;
- Availability of renewable energy resources (e.g., wind, water, and sun);
- Availability of human skills;
- Economic viability of the project;
- Village enthusiasm and interest in participating in the project; and
- Social utility of the project.

9. To shorten periods of research before installation of equipment, the project participants should first make use of any relevant research data that may be available from the government or other organizations. Where data are not available or are inadequate, research should be conducted in the shortest time possible.

10. A training program for village technicians and for some specialist staff should be included in the proposed Pilot Project. A fully fledged, formal training unit or institute within the project is not thought necessary for the Pilot Project.

11. Current Tanzanian afforestation programs should be implemented at the village level to ensure that the supply of wood fuel is not depleted. Wood is still a main source of fuel for domestic purposes, as well as for curing tobacco and baking bricks.

12. Provision of an adequate supply of reasonably clean water should be given top priority in Tanzanian villages. One method that should be tried is the collection and storage of rainwater from clean roofs, as well as the use of solar distilling systems.

13. Development of the new national capital in Dodoma should be seen as a unique opportunity to utilize renewable energy in Tanzania. UTAFITI should provide information, advice, and encouragement regarding renewable energy to the Capital Development Authority within the urban and village areas of the capital.

CHAPTER III

CURRENT ENERGY NEEDS IN RURAL TANZANIA

The villages of Tanzania use only a fraction of the nonhuman energy utilized in the industrialized nations. Three features of their energy use are conspicuous. First, people depend largely on muscular energy to perform all basic activities and obtain their needs for survival. Second, obtaining domestic fuel for cooking, which is mainly derived from wood or vegetation-based sources, probably accounts for 80 percent of the extra-muscular energy used. This source of energy is already threatened in many parts of Tanzania. Third, there are as yet very few energy technologies in actual operation, and the few that have been introduced depend on fossil fuels and are of a conventional design. Moreover, both the fuels and the techniques have to be imported. The quality of life can generally be described as close to the poverty level, in which drudgery, toil, and uncertainty can at times make life wretched. This bleak picture is tempered by the varied nature of the country, its resources, and its past development history. The obvious and indisputable fact, therefore, is that something has to be done. This points to a pressing need for data gathering, research, and development.

In this chapter the characteristic village-level energy outputs and needs are summarized. Specifically, these are: the requirements of village level institutions such as schools, clinics, shops; of the villagers as a group (water especially); of indigenous and modern methods of economic production and processing; and of the component households within the village. In 1977 many villages were newly registered, were potential ujamaa villages in the constitutional sense of the term, and were newly settled. There are also older villages, some of which may not yet be registered. All villages are included in the discussion that follows.

The target number of households in new villages is 250. Tanzanians calculate the average number of persons per household at 6, so that most newly settled villages should be approximate 1,500 inhabitants; however, villages are known to range in size from several hundred to 2,000. Although average household size can be taken at 6, variation from an occasional household of 1 or 2 persons only to larger compounds of 30 to 40 people are also known. The average figures of the 1,500-person village and the 6-person household are vital to estimating the energy requirements on a per capita basis at the scale of the village-level institutions and/or for household use. Devices should be judged for their suitability according to the scale required. A further key variable is

settlement pattern. New villages are commonly designed to have compact residential and village center areas--in fact, increasing village population density is one of the reasons for resettlement. Older villages display so much greater variation in settlement patterns that degree of dispersion and average size of household become extremely important considerations in evaluating their current energy needs.

Excluded from consideration are the energy requirements of industrial installations, towns of more than 2,000 people, non-village-related processing of agricultural products, and other special uses. Included are actual current practices and those aspects of contemporary village life in different parts of Tanzania for which requirements can most obviously be met with devices utilizing renewable sources. At this point it should probably be stressed that overwhelming demand exists in certain key areas for domestic fuels and water pumping, but that little or no change can be expected in other areas such as weeding, pruning, and harvesting of tree crops that universally require intensive hand labor.

The remainder of this chapter is presented in three main parts: I, a fairly detailed discussion of the most common energy-use features of village life in Tanzania; II, a discussion of energy use at the household and individual level; and III, the regional variation in energy supply and village-level demand or deficit in each of seven principal zones--Coastal, Central, Western, Southern Highland, Southern, Lake, and Northern. The questions on resource assessment and technology are repeated for each zone. Results are summarized here and given in full in Appendix K.

VILLAGE ENERGY REQUIREMENTS

Energy demands at the village level fall into a number of broad, sometimes overlapping categories: subsistence, production, processing, agricultural, and social and community.

Subsistence

Energy for basic needs like food and water cannot be taken for granted; even the energy required for day-to-day survival has recently been threatened on a regional scale in Africa. In Tanzania, human catastrophe was averted by a huge expenditure from the nation's foreign exchange reserves and diversion of funds from other pressing needs. The big drive in the country is to produce more food. With a less-than-adequate diet, there is a problem of efficient use of human energy. Another problem is the amount of energy that must be spent on collecting water.

Production

The production of food and other essentials, for both subsistence and less pressing needs, depends a great deal on human labor, including

child labor. Human energy is used for preparing land, weeding, fertilizing, and harvesting. A number of steps could be taken in the present agricultural system to save energy. For instance, in areas of rainfall variation or low rainfall, production could be increased by irrigation; draft animals could be introduced, although there are social and technological problems; and improved seed and techniques could be used.

Processing

Processing presents the largest demand on nonhuman energy requirements, especially if cooking is included. Processing energy is needed for drying, threshing and grinding, preserving, converting, and storing. In a class by itself is the processing of raw material other than food for obtaining income or creating shelter.

Agricultural

In addition to production and processing needs, agriculture requires energy for transport, distribution, and marketing.

Social and Community

Communal uses of energy are increasing as the villages develop. Energy for lighting public places and for schools and hospitals, for instance, are now common village needs.

These general categories of village energy use received considerable attention during the workshop, a fact that will be reflected in the more detailed discussion that follows. The energy categories will be discussed under two headings: Economic Production and Processing, and Community Energy Needs.

Economic Production and Processing

The regional variation or heterogeneity of resources in Tanzania provides the base for a number of economic adaptations for the production of food: gardening (manual--hoe and digging stick); agriculture (plow cultivation, primarily of grain crops); tree crops; animal husbandry (cattle and small stock and fishing, both fresh water and ocean).

Three general statements can be made:

First, in different regions and among the 110 ethnic groups, combinations of activities are common (e.g., gardening with tree crops and fishing). Emphasis is commonly placed on one or two prominent economic activities in what becomes the characteristic complex of each group. The regional picture is a distinctive composite.

Second, each group and probably each zone, has a characteristic human energy budget. The existing human energy budget (and animal energy budget) creates--and should be evaluated for--a demand. (A rough attempt is made below.)

Third, demand, and a gap between demand and current supply, may be great in areas that also contain an abundance of a renewable energy supply. For example, the dry Central zone, where trees grow slowly and firewood demand exceeds supply, also has (or may be expected to have) significant amounts of solar energy (the number of sunny days exceeds the number of cloudy days).

The objective of this report is to make a first-cut review of village and domestic level needs, to cover the main areas that need supply. Rates of demand are difficult to figure, and their estimate should be derived from an analysis of available data and, where necessary, supplemented by new or forthcoming information.

In a summary review of village energy requirements, a useful dichotomy can be made between food production and the production of other goods and services such as building and the provision of water and fuels. In turn, food production can be further divided into the type of crop (cash or subsistence); range management; fishing; and, most marginally, hunting. Some production data are cited from Berry, 1971[1]:

Gardening

Hoe cultivation of subsistence crops is universal. It may be performed for kitchen crops under shifting cultivation or continuous cultivation. The main crops include: maize, beans, millet and sorghum, gourds and squashes, onions, English potatoes, spinach, tomatoes, Bambara, groundnuts, and sugarcane.

Agriculture

Plow cultivation cropping includes: wheat, rice, some maize, cotton, and tobacco.

Tree Crops

Coffee, tea, and cashew nuts are primarily commercial crops but are grown or collected on a household basis. Bananas, mango, citrus fruits, papaya, and almond are staple or supplemental. Tree crops can be incorporated into shifting cultivation, but more commonly are grown in more-or-less permanent holdings or form the basis for continuous cultivation (bananas and plantain).

A set of tables was generated during the workshop in Tanzania to summarize the types of energy customarily or potentially used in the cropping and processing cycle. The completed matrix used for this exercise appears in Appendix K.

The tables were used by the working group to make a systematic review of the customary workload of the villagers and to summarize the knowledge and experience of the Tanzanians so that the most opportune situations for the use of renewable resources could be demonstrated.

Livestock

Cattle predominate, but goats and sheep are also commonly kept along with cattle. (The commercial parastatal ranches are not included.) The dominant pastoral groups are confined to certain grasslands; much of the area of Tanzania that is hospitable to animals is utilized for mixed economies rather than as pure or dominant pasture land. It is understood that some areas are fly-infested, and others are in forest reserves.

Fishing

The largest lakes (Victoria and Tanganyika) provide fish locally and for export to other areas. Coastal fishing is also divided into subsistence and commercial sectors. In 1967 the total catch from the large lakes was as follows:

Victoria	38,700 tons
Tanganyika	22,500 "
Rukwa	22,000 "
Kitangiri	5,500 "
	88,700 tons

This amount was 83 percent of the total annual catch, with the remaining 17 percent from marine catches. There are also 10,000 family fishponds.

Building

Poles, reeds, thatch, and twining are all harvested and subject to human management. Thatching grass is sometimes cultivated as a crop. Trees (teak) especially suitable for use as house poles are also cultivated in small plantations. Poles used for walls and supporting structures are already scarce near the big cities and in the semiarid regions.

Production of building materials such as cement, lime, and burnt bricks also consumes energy. In the table below, the energy needed for production of 1 m^3 of several building materials is roughly calculated and we can see from the table that the production of locally burnt bricks consumes much energy, and therefore a vigorous afforestation program should be undertaken to provide the necessary firewood.

The building industry also uses energy in the form of transport (of poles, bricks, cement, sand, roofing materials, etc.). This energy is imported from abroad, and the organization of the construction industry should therefore be organized in order to minimize the transportation of materials over long distances. The energy required for transporting

TABLE 1 Consumption of Energy per m^3 in Production of Building Materials

Building Material	Energy Needed in m^3 Firewood		Energy Consumption		Additional Energy Needs
		kWh	Oil	Wood/Coal	
Concrete (44.1)	0.080		X(or gas)		Transport of aggregates and cement (oil)
Bricks (locally made)	0.380			X	Solar energy for drying, short transport
Bricks (ring kiln)	0.130		X	X	Solar energy for drying. Transport of bricks and fuel (oil)
Soil cement (10.1)	0.065		X		Transport of cement (oil)
Soil cement (16.1)	0.041		X		Transport of cement (oil)
Soil lime (10.1)	0.064			X	Transport of lime
Mud and poles (traditional house)	0.110			X	
Mud blocks	0				

conventional cement makes a soil-cement alternative very attractive, since the only thing transported is cement and the mix proportion is approximately 1:16.

The use of firewood in the construction industry is small compared to household use. But it is still important in areas where deforestation is a problem. In the design of a house, solar heat is often taken into consideration. Along the coast the houses are built with thin walls in order not to store the day's heat into the night. On the other hand, in inland areas we usually find thick walls, and sometimes a mud roof, to act as a heat reservoir. The mud roofs are generally found in the semi-arid areas because rainfall must be taken into consideration. When modern building materials (concrete blocks, bricks, and corrugated iron sheets) are introduced, the good traditional building principles are sometimes forgotten.

Community Energy Needs

The growing community uses of energy spring, in part, from the current political nature of a village. Tanzania has 8,000 villages; it is estimated that by the end of the Village Program there will be about 10,000. In 1975 the Government passed an act to provide for the registration of villages, the administration of registered villages, and the designation of Ujamma villages. By definition, a village is a community registered under this act when the registrar is satisfied that not less than 250 families have settled and made their homes within the boundaries of that community. Each village has a Village Assembly, Village Council, and a 10-cell administration setup.

Every village also has certain activities imposed on it that promote its economic and social development. The table below lists the usual ones, in terms of the organizations or facilities basic to each function, and shows the energy needs of each of these.

TABLE 2 Village-level Energy Requirements

	Water Pumping	Water Purifying	Lighting	Communications	Cooking, group	Machinery	Firing	Heat, Cool
School	X	X	X	(X)	X			XX
Clinic	X	X	X	X	X			XX
Shops	X	X	X					X
Village Office (Assembly, Council)			X	X				
Village Industry	X		X			X	X	XX
Utilities	X	X	(X)					

In order to facilitate these operation centers, it is important to improve, or to establish, reliable sources of energy at the village level.

Energy plays a larger role in man's struggle with the vagaries of nature than merely sustaining life. The purpose of the village program is to give people control over their own lives and development; they can be successful only if there is enough energy. Most of these village functions are too large to be operated by an individual household. Looking at the functions in the chart above, we try to tentatively assess their requirements for energy.

Schools

Light. At the present time, the use of school buildings is restricted to daylight hours. If energy for lighting were supplied, the hours could be extended. With the introduction of Universal Primary Education (UPE), classroom space has been a limiting factor on enrollment. If lighting were provided, schools could be available for more classes, including adult education classes.

Heating. For different school tasks such as experiments for science subjects, a source of heat is required. In cold areas such as the Southern Highlands, Kilimanjaro, and the Usambara areas, space heating of the classrooms is required on a seasonal basis.

Water pumping and purifying. There is a need for drinking water and water for washbasins, laboratory sinks, and kitchens.

Cooking. If stoves and water were available, schools could serve hot lunches to children, who often walk considerable distances to school. The same kitchen could be used for village-wide events.

Clinic/Health Centers

Light. Light is needed for medical emergencies that occur during the night.

Heat. Heat energy is required for sterilization of equipment.

Energy for cooling. Certain equipment and medicines require storage at a specified temperature. Refrigerators are too expensive to be provided for every village. Alternatives such as solar cooler could be used.

Water. Water for cleaning equipment and potable water for drinking are required.

Cooking. Cooking facilities are needed for staff and outpatients.

Shops

Village shops are retail outlets for items such as sugar, kerosene, matches, torches (flashlights) and batteries, tea, tinned milk, bread, seeds, and sometimes locally obtained supplies of flour. While butchers, dry goods merchants, hotel keepers, and others may not be found in every village, they are nonetheless common. The business or shop may be quite small and often is part of the owner's family home.

Energy needs--mainly light and heat--depend, of course, on the size of the shop, its hours of operation, and the local climate.

Community Centers

Light. Light, often not available in community centers, is required from sunset to about 10 p.m. for recreational purposes and cultural activities that could take place during the evening after the day's work.

Heat. Heat is needed at times in cooler regions.

Small-Scale Industries

Traditional crafts practiced at the village level, i.e., by villagers or groups of villagers, include carpentry, blacksmithing, pottery, and weaving. Blacksmithing and pottery require intensive heat sources, traditionally obtained with charcoal and firewood. Handsawn timber is giving way, where possible, to power-driven saws. Weaving is primarily a hand operation, but spinning could be mechanized. The demand on firewood for crafts and industrial processing is an especially important consideration in a review of village energy requirements.

Clearly, energy is required for many uses at the village level and can be obtained from different sources. However, since the provision of energy from fossil sources is increasingly expensive, the use of renewable energy sources should be investigated.

ENERGY NEEDS AT THE HOUSEHOLD LEVEL

In rural Tanzania, the major source of energy at the household level will continue to be wood fuel. With the rising prices of petroleum and natural gas, the country will not be able to provide every household with these fuels, partly because rural incomes are still too low to afford them.

The energy needs existing in village homes are: cooking, heating, lighting, and water.

Cooking

Ninety-five percent of cooking is done with wood; charcoal and kerosene account for the remainder. Estimates on household consumption are difficult to obtain. One ad hoc estimate is 1/25 of m^3 per household per day in an area where plantain is the principal starch. In other areas where maize or beans are a main item in the diet, two to three times as much cooking time may be required. It is not known how much extra fuel is necessary in this case, but at least twice as much should be considered in analyzing supply requirements.

Heating

The evening cooking fire provides heat as well as some light. In the central plateau and highlands, this aspect of firewood use is important; on cold days, fires may be used predominantly for heating.

As noted, for both cooking and heating purposes, the use of wood fuel (firewood and charcoal) will continue to be dominant, and in the rural areas it is still not feasible to provide alternative sources at the household level other than renewable sources. Demand for wood fuel is estimated at 2 m^3 per capita per year. The rural population estimate is 92 percent of 14.4 million, or 13.2 million. Given the target standard of 250 families per village in new settlement areas, the demand per village is 2 m^3 x 250 x 6 = 3,000 m^3 per year. The growth increment of 40 m^3/ha* would require 75 ha of consolidated forest per village. It is not characteristic for each village to have a forest reserve of that size. The supply deficit is estimated at 18 million m^3/rs. Because cultivation and firewood requirements create a predictable demand on flora in the vicinity of newly settled villages and require plant regeneration, the definition of productivity, [3] biomass, [2] and yield [3] are defined as follows:

° "Above-ground biomass consists mostly of vegetation, i.e., grasses, forbs, trees, and shrubs. However, it is not (strictly speaking) phytomass (the mass of plants) or the standing crop of plants, because precise measurement which excludes nematodes, insect deposits, etc., is highly technical and difficult to achieve under field conditions. For working purposes biomass does not include animals."*

° Primary productivity is the rate at which organic material is created by photosynthesis. Primary productivity is limited by such factors as availability of light, soil nutrients, and water. Water is of course critical in arid and semiarid environments. Not only is water used during photosynthesis (in the chemical reaction when carbon dioxide is fixed into sugar that serves as the basis for other organic compounds), but water is necessarily lost from moist cell surfaces in leaves and green stems because surface pores must be kept open so that carbon dioxide from the air can be absorbed. Some desert plants have evolved a chemical means of storing CO_2 absorbed at night and thus can keep the pores closed during the day, but these plants are very slow-growing--sometimes only millimeters/year--and no crop plants fall into this category.

° Net primary productivity is the amount of CO_2 incorporated into organic material in plants in excess of the organic material used by the plant for its own metabolic needs. For desert scrubland throughout the world this ranges from 10 to 250 grams dry weight/square meter/year, with a world average of 70 g/m^2/yr.

° Yield (harvest) is that fraction of net productivity that it is feasible to remove without destroying the basis of the productivity. The world "productivity" is often used throughout the Plan of Action to mean "yield," and the delegates should be aware of how ecologists distinguish the two terms. Note that yield is always lower than net productivity. Yields are at most 30 percent of net productivity in the case of cereals and wood.

---

*American Association for the Advancement of Science, Handbook on Dissertification Indicators, (Washington, D.C.: American Association for the Advancement of Science, 1978), pp. 35-36.

It is customary to expect a headload of firewood to last a household for three days. (The task of gathering it is rotated among the women of the household.) It is also expected that firewood will be collected within walking distance, which defines a natural "firewood collection zone" around each village. It also means that if firewood supplies dwindle, the foraging and walking times increase. Firewood also enters the market for town dwellers, invalids, and for craft shops, etc. Changes in the kinds of plant species, can serve as an indicator of the deterioration of plant resources.

Lighting

A 1977 estimate is 1 liter of kerosene per household per week for lamps. In 1967, kerosene was sold at the rate of 4.4 liters per person per year.

Water

Approximately 8 liters of water per person per day is a reasonable minimum, which is determined by the demand/supply equation and the human labor time required for carrying water.*

REGIONAL VARIATION

With the great differences in resources and problems among regions of Tanzania, there is obviously no single solution to the major problems of development. However, use of the guidelines that follow can help put these regional differences into a workable perspective, enabling the establishment of valid priorities.

1. Priority, in most cases, should be given to problems that threaten basic human needs. One such problem is domestic fuel for cooking, especially in semiarid and densely populated areas.
2. Each problem should be viewed in a macro-perspective. In the case of wood shortages, for example, while domestic fuel for cooking is approaching a crisis stage in districts like Dodoma and Mwanza, it exists in abundance in Mpanda.
3. Every attempt should be made to increase the productivity of human labor and reduce drudgery. The problem most in need of attention is water supply, that is, the development of technologies to make water available in quantities that will satisfy domestic needs with less human drudgery and that will also have an impact on overall development. In coping with this and other problems, efforts should be greatly increased to introduce technologies that will improve productivity through better

---

*The provision of an adequate supply of reasonably clean water is considered the highest priority by many rural Tanzanians.

energy utilization. Energy for irrigation, for drying produce, and for processing and storage are only a few of the areas that need attention.

4. In introducing new energy technologies, priority should be given to those that will benefit the community as a whole. For instance, the village schools could act as energy extension-agents; an assured supply of water and light in school buildings--along with the energy technology being demonstrated--could better promote local skills and self-reliance than some of the more conventional techniques of community development.

5. Last, whenever possible, existing energy systems should be improved in lieu of establishing new ones.

In establishing development priorities, Table 3 can be used as a data-gathering format. For the lefthand column, planners should find out what energy is currently being used in the area and where the major energy deficit lies. For the righthand column, they should explore the potential for remedying this deficit by expanding the energy supply, mainly by using existing renewable resources.

TABLE 3 Data-Gathering Format*

		Chief Energy Deficit	Renewable Resource
1. COASTAL ZONE	TANGA COAST MOROGORO DAR ES SALAAM LINDI MTWARA	Domestic fuel for cooking and food processing	Wind Hydro Direct Solar
2. CENTRAL ZONE	DODOMA SINGIDA	Domestic fuel for cooking	Direct Solar
3. WESTERN ZONE	TABORA KIGOMA RUKWA	Pumping water	Wood
4. SOUTHERN HIGHLANDS	IRINGA MBEYA	Domestic fuel for heating, lighting, and cooking	Hydro
5. SOUTHERN ZONE	RUVUMA	Domestic fuel for heating and lighting	Hydro (coal) Direct Solar
6. LAKE ZONE	MWANZA BUKOBA SHINYANGA	Domestic fuel for cooking and heating	Hydro Biogas
7. NORTHERN ZONE	KILIMANJARO ARUSHA MARA	Domestic fuel for cooking	Hydro

*See Appendix K for more details.

Source: Leonard Berry, ed. Tanzania in Maps. (London: University of London Press, 1971), p. 15.

REFERENCES

1. Berry, Leonard, ed. 1971. Tanzania in Maps. London: University of London Press Ltd., 172 pp.

2. American Association for the Advancement of Science. 1978. Handbook on Dissertification Indicators. Washington, D.C.: American Association for the Advancement of Science, 160 pp.

3. Whittaker, Robert H. 1970. Communities and Ecosystems. London: The Macmillan Company, Collier-Macmillan Limited, 158 pp.

CHAPTER IV

INSTITUTIONAL FACTORS

If an innovation like solar energy technology is to be successful, it needs the full support and cooperation of all relevant institutions. This is especially true in Tanzania, where all development activities are publicly controlled. The relevant institutions are the Party (CCM), the Government Ministries, the Parastatal Organizations, academic institutions, and villages.

Following is a list of the relevant Ministries, Parastatals, and other institutions that should be involved in the village solar energy effort:

Ministries
1. Water, Energy and Minerals
2. Natural Resources
3. Agriculture
4. Works
5. Industries
6. Communications
7. Finance and Planning
8. National Education
9. Prime Minister's Office
10. Land, Urban Development and Housing (including Building Research Unit).

Parastatals
1. UTAFITI (Tanzania National Scientific Research Council)
2. TANESCO (Tanzania Electrical Supply Company) and other institutions such as
   RUBADA (Rufigi Basin Development Authority)
   TPDC (Tanzania Petroleum Development Company)
3. SIDO (Small Industries Development Organization)
4. CDA (Capital Development Authority)
5. Banks: Tanzania Investment Bank; Tanzania Rural Development Bank; Tanganyika Development Finance Company, Ltd; East Africa Development Bank; National Bank of Commerce; IBRD office in Tanzania.

Academic and Research Institutions
1. University of Dar es Salaam
2. IDM (Institute of Development Management) - Mzumbe
3. Agricultural Research Institutes

4. East African Management Institute
5. Tropical Pesticide Research Institute
6. Meteorological Institute

Village Organizations

The Village Act of 1975 and the Urban Ward Act of 1976 gave legal status to all the villages and urban wards within Tanzania as multipurpose economic entities. The Village Council and the Village Assembly are the bodies responsible for village/ward development.

The Village Council has five committees:

1. Planning and Finance
2. Production and Marketing
3. Education, Culture and Social Welfare
4. Security and Defence
5. Building and Transport.

All of these committees are directly relevant to any solar energy project.

NATIONAL FUNCTIONS INVOLVED IN ESTABLISHING A VILLAGE ENERGY PROGRAM

The first step in establishing a village energy program is the design of an initial program so that experience with solar energy may be gained at the village level to determine:

° Solar technologies that might be applicable to the various tasks of the village;

° How these technologies compare with conventional ones in cost and performance; and

° How to ensure the active interest and cooperation of villages and their capacity to make use of, maintain, and repair such technical devices.

Selecting Villages for the Testing Phase

For an adequate comparison of various proven solar devices, a sufficiently large number of villages should be chosen to represent the various climatic, economic, and topographic features and the cultural groups in Tanzania. This would probably require not less than 15 villages, and the exercise would be more valid if the number were several times that large. Criteria to be considered for the selection of these villages would include:

1. Availability of renewable energy resources (e.g., wind, water, and sun)
2. Human skills
3. Village needs
4. The economic viability of the project
5. Social utility of the project
6. Village interest in participation.

Establishing a Training Unit

Since the success of solar device in a village depends on the ability of villagers to operate, maintain, and in many cases to repair it, there should be a national training unit to train a number of mechanically apt people from each village in the technology. Although a formal training unit is not needed for the testing phase, it will be needed if a decision is made to extend solar energy throughout the country. Such a unit would need qualified technicians and an array of solar devices. The Village Management Technicians Training Program could incorporate the subject of solar energy into its curriculum.

Enlisting Village Support

In developing a program for any given village, the national authorities should ensure that appropriate village authorities participate in its planning and are fully involved in its implementation.

Soliciting Feedback

The national authorities should work with regional, district, and village authorities to ensure that experience of the village with the technology is reported to, and taken into account by, those doing research on solar energy.

Engaging in Research and Liaison

The national authorities should undertake continuing research on solar technology applicable to the village level and should keep abreast of similar research going on elsewhere in the world.

Performing Analysis

National solar energy authorities should analyze the experience of the villages with solar energy technologies. Based on their findings they should recommend the appropriate levels of the Government of Tanzania what role such technologies should play in meeting the expanding energy needs in the villages over the next 10 years or so. If the experience warrants, steps should be taken to rapidly extend the technology throughout rural Tanzania.

Ensuring Program Validity

The organizations charged with the functions described above should combine scientific rigor, to ensure that action is guided by fact, with a missionary sense of the importance of village development to make sure that information is pursued not as an end in itself but as a basis for action.

In a broad sense, the national Government has three related but separately identifiable solar energy functions. These are:

1. Coordination

It is essential to assure that all units of the Government of Tanzania take into account solar energy potential in any use of energy at the village level, rather than installing diesel or gasoline engines without considering solar alternatives.

2. Research

Adequate applied R&D will permit consideration of worldwide developments in solar technology, the adaptation of technology relevant to Tanzanian needs, and the development of wholly original Tanzanian ideas.

3. Implementation and Extension

The nation and Government will be responsible for bringing existing and newly developed technology to the village level, initially on a test basis, and, as experience warrants, to all of rural Tanzania.

RECOMMENDATIONS

1. The Government of Tanzania should establish an organization to carry out the functions of coordination, research (including a centralized solar laboratory), and implementation of solar energy programs and activities within Tanzania.

In this regard, the Government may wish to consider the following organizational alternatives, among others:

- Establishing a Solar Energy and Extension Institute located directly under the President's Office (alternatively under the Prime Minister) or the Ministry of Water, Energy and Minerals).
- Separating the three functions by designating UTAFITI to be responsible for research; the Ministry of Water, Energy and Minerals for implementation (or extension); and the President's Office or Prime Minister's Office for coordination.
- Assigning the coordination function to the Prime Minister's Office and research and implementation and extension to the Ministry of Water, Energy and Minerals.
- Establishing a Solar Energy Institute under the National Scientific Research Council.
- Establishing a coordination committee under the National Scientific Research Council or the Economic Division of the President's Office.
- Assigning research activities to be the responsibility of UTAFITI.
- Placing implementation and extension under a special section of the Ministry of Water, Energy and Minerals, which will also collaborate with other technical Ministries and the Prime Minister's Office.

2. An inventory should be made of the institutions and individuals having a particular interest in, or relationship to, solar energy and other alternative energy systems.

3. TANESCO should incorporate in its electricity planning the investigation of solar energy sources generated on-site as well as

electrification by diesel or gasoline engines or from a central grid system. Such solar energy sources should include mini-hydro generation utilizing dependable streams, wind, and organic wastes, as well as diesel and sunshine.

4. The development of the new national capital in Dodoma should be seen as a unique opportunity to utilize renewable energy in Tanzania. In this regard, UTAFITI should provide information, advice, and encouragement to the Capital Development Authority to promote this utilization in the urban and village areas of the capital.

5. A provisional committee should be established under the direction of UTAFITI to take whatever steps are appropriate to have this report considered by the Government of Tanzania.

CHAPTER V

SOLAR APPLICATIONS APPROPRIATE TO THE VILLAGE

In the sections that follow, five technologies are discussed that we believe are potentially applicable to one or more village tasks--small-scale hydropower, biogas generation, use of windmills, use of photovoltaic power generators, and low-temperature applications. These five were selected from a larger array of possible solar energy devices. Table 4, Solar Energy Applicability Matrix, illustrates this wider range of technologies together with the village tasks to which each might be applicable. The table suggests that there are 12 technologies (including the use of draft animals) which, when applied to 14 common village or household tasks, result in 34 applications and 39 potential applications.

The discussion of the five selected technologies describes each one briefly, discusses its applicability to village and household tasks, and analyzes the probable costs of its installation and use.

Small-Scale Hydropower

For centuries, energy from water flowing from a higher to a lower level has been used to rotate shafts that replace manual work. In the last century, this energy of rotation has come to be used principally for conversion to electricity. In Tanzania there are many small rivers and streams with a sufficient flow to make them possible sources of small-scale hydroelectricity. This is particularly true of the East African plateau fall line, the western region bordering on Lake Tanganyika, the area in the northwest around Lake Victoria, and the slopes of Mt. Kilimanjaro. The technology is a mature one, with devices available in a variety of sizes "off the shelf" not only in the United States, but in many other countries. With known cost figures as a basis, four cases are considered in the table below. These cases provide for two basic situations--one in which the needs of the village (300 kWh/day in 5 hours) would be supplied directly by the generator during the hours of use (i.e., 60 kW), and one in which a smaller generating capacity (i.e., 15 kW) would be used with storage batteries to supply the required 300 kWh/day by generating over a period of 20 hours.

TABLE 4 Solar Energy Applicability Matrix. Animals are included as a solar technology (based on photosynthesis). For many villages the use of animals would represent a modernizing step. It includes the use of dung for burning or fertilizing. Presentation by J. R. Williams.

Symbols: ++, applicable; +, potentially applicable; -, not applicable.

Solar technology	Energy Use													
	Water pumping	Lighting	Cooling	Communications	Water desalting	Spinning	Sawing	Heating			Grinding	Drying	Transport	Fertilizing
								Cooking	Space	Domestic water				
Solar cells	+	+	+	++	-	+	-	-	-	-	+	-	-	-
Flat-plate collectors*	+	-	+	-	++	-	-	+	++	++	-	++	-	-
Concentrating thermal collectors	+	+	+	+	+	-	-	+	-	-	-	-	-	-
Solar, Stirling (small scale)	+	+	+	+	-	+	+	-	-	-	+	-	-	-
Solar, rankine	+	+	+	-	-	+	+	-	-	-	+	-	-	-
Wind (mechanical)	++	-	-	-	-	+	+	-	-	-	++	-	-	-
Wind generator	++	++	++	++	-	+	+	-	-	-	++	-	-	-
Water (mechanical)	++	-	-	-	-	++	++	-	-	-	++	-	-	-
Hydroelectric	++	++	++	+-	-	++	++	-	-	-	++	-	-	-
Bioconversion wood/charcoal	-	+	-	-	-	-	-	++	++	++	-	++	-	+
Biogas	+	++	+	-	-	-	-	++	-	+	-	+	+	++
Draft animals	++	-	-	-	-	-	-	+	-	+	++	-	++	++

*Includes solar stills.

The cost calculations for these four ways of supplying hydroelectric power are summarized in Table 5. For the purposes of this exercise, it was assumed that dams and penstocks, if needed, could be constructed with local labor and materials (timber and earth) without significant capital costs.* The water requirement estimates were based on data supplied by manufacturers of turbine/generator systems of the scale discussed. In all cases, where battery storage was required, it was assumed that the cost of the batteries would be amortized over the six-year life expected for that subsystem, allowing for battery replacement as needed, independent of the lifetime and/or amortization rates for the other equipment. As with dams and penstocks, no cost figures were included for protective housing for batteries or power-conditioning equipment, on the assumption that locally available materials would suffice. (For all of these cases, some maintenance would be advisable. At an estimated cost of Sh. 1,000/month, this would add Sh. 0.10/kWh to each of the cost figures.) Any of these assumptions might not be valid in specific circumstances; nevertheless, the estimates show that small-scale hydroelectric installations are competitive with present large-scale systems (to say nothing of their freedom from the serious environmental and social consequences of large-scale hydroelectric projects) and are worth serious consideration in rural areas.

TABLE 5 Types of Hydroelectric Power Equipment Considered

Case	Type of Power Generated	Type of Power Used	Power Conditioning Required	Storage Required	Generating Capacity
1	DC	AC	Yes	No	60kW
2	AC	AC	No	No	60kW
3	DC	AC	Yes	Yes	15kW
4	DC	DC	No	Yes	15kW

*Techniques using local labor and materials to construct dams and penstocks for installations capable of producing power in tens of kilowatts have been developed in Colombia, for example, at the Centro de Desarrollo Integrado "Las Gaviotas." Tanzanian participants indicated that the small local civil works would be built with local labor and materials and would not need to be included in the national budget; hence they were not counted in our calculations. Experience may prove, however, that some national technical assistance will be needed. The local costs in materials and labor--which it is believed will be met by villagers--will, of course, be considerable.

As a result, the panelists felt it helpful to extrapolate these estimates to the case where a large region of, say, 500 villages would be supplied with perhaps as many as 500 small hydroelectric generating units--in those areas where the availability of rainfall and water flow are sufficient. As an example, the local capital requirement for Case 1 would be Sh. 330,000,000. If a loan could be procured from the International Development Association (IDA), the "soft-loan window" of the World Bank, the economics of small-scale hydroelectricity applied on a large scale would be very attractive.

For such a loan, no payment is required for the first 10 years, and the loan is repayable, in equal annual installments over the next 40 years, at an annual interest rate of 0.75 percent. For this example, this would mean a financing cost of Sh. 9,600,000/year from the eleventh through the fiftieth years. If the energy generated were sold to the village's at the cost figures calculated in Table 6c, the annual income would be Sh. 53,000,000, assuming a conventional 10-year loan, and Sh. 35,000,000, with a conventional 30-year loan. This would provide the

TABLE 6 Cost of Supplying Hydroelectricity with Small-Scale Systems (a)

a. Base Data

Power (kW)	Head (m)	Flow (m^3/min)
60	48 24 12 6 etc.	12 25 50 100
15	24 12 16 etc.	6 12 24

Item	Lifetime (yr)	Unit Cost (Shillings)
Generator/ Turbine	30	4,000/kW
Power Conditioning	30	6.00/W
Batteries (Eff. 85%)	6	800/kWh

government with between 25 and 40 million shillings for other projects. On the other hand, if energy were sold at a rate just sufficient to meet the 40-year cost of the IDA loan, the rate would be Sh. 0.17/kWh, less than one-fifth the current price of electricity in Dar es Salaam, and a cost more easily supportable by the villages electrified in this scheme. (This is approximately one shilling per week.)

The four hydroelectric cases considered were based on use by the villagers of 200 watts of electricity for five hours per day. For Cases 3 and 4, this is the total capacity of the system. For Cases 1

b. Equipment (Fixed) Costs (Shillings)

	Case 1	Case 2	Case 3	Case 4
Generator/Turbine	240,000	240,000	60,000	60,000
Power Conditioning	360,000	-0-	90,000	-0-
Installation	60,000	24,000	15,000	6,000
Subtotal	660,000	265,000	165,000	66,000
Battery Storage	-0-	-0-	280,000	280,000
Installation	-0-	-0-	28,000	28,000
Subtotal	-0-	-0-	308,000	308,000
Total (approx.)	660,000	270,000	470,000	370,000

c. Financing Costs @ 10% Annual Interest Rate [a], [b]

	Case 1	Case 2	Case 3	Case 4
Annual Cost in Shillings[c] for				
30-year loan	70,000	29,000	89,000	78,000
10-year loan	107,000	44,000	99,000	82,000
Cost of Electricity in Sh/kWh (Based on 110,000 kWh/yr)				
30-year loan	0.64	0.26	0.81	0.71
10-year loan	0.97	0.40	0.90	0.75

(a) Cost of dams and penstocks not included. See text.
(b) Based on amortization of loan in equal yearly installments.
(c) In both cases, it was assumed that the cost of the battery storage would be amortized over six years.

and 2, however, the system would be capable of supplying energy at the same rate (60 kW) day and night for 24 hours. If this capacity were used for more than five hours daily, the cost per killowatt-hour could be reduced as much as a factor of four or five. That is, with load factors greater than 0.2 (five hours' use per day), the cost of electricity production by small-scale hydropower systems of the type considered could approach Sh. 0.1 - 0.2/kWh.

BIOGAS GENERATION

The generation of methane from human, animal, and agricultural wastes is a process increasingly used in developing countries, as people grow more aware of the potential of these "waste" materials as a source of both energy and fertilizer. The process involves fermentation of these materials, in the absence of air, to produce "biogas," which contains roughly 60 percent methane. The process also produces a residue that is a valuable fertilizer, since it contains all the plant nutrients present in the original materials. Several biogas plants are already operating in Tanzania and a body of experience in their construction and operation is being accumulated. The results show that the use of biogas should be considered not only for village lighting and cooking, but also for the generation of electricity or mechanical power. The use of cattle dung is assumed, with average production rates and methane concentrations. Table 7 gives the costs of lighting by a gas-mantle lantern and with generated electricity when biogas is used.

Analysis of the data shows that gas requirements for cooking three times a day are approximately 1.4 m^3/day per family, which could be supplied by dung from three to four cows. On the other hand, to supply the electric lighting needs of a family (1 kWh/day) by using biogas to operate an engine-generator set (at peak load) would require 4-5 kWh/day of heat energy, which could easily be supplied by two cows. This method of lighting, therefore, is almost four times as efficient, in energy use, as a gas-mantle lantern, even though it requires a much greater capital investment. Finally, this same amount of gas--the gas supplied by dung from one cow--would provide mechanical power alone at 1 kWh/day. Of course the variations in methane composition that may occur in actual practice may reduce the efficiency of the internal combustion engine by an unknown amount from the figures used in our calculations.

Another potential use for biogas, as a replacement for wood and charcoal, is in firing clay pottery, used for water and cooking vessels. For small-scale production, 8 m^3 of methane, over a period of about 5 hours are required to fire earthenware to 1,000°C in a kiln having a volume of 6 ft^3 (0.2 m^3). This is the equivalent of about 13 m^3 of biogas, which could be supplied by a 4-day accumulation of biogas from the dung of 5 cows. Larger production capacities--for instance, a village industry--could be scaled up accordingly, and would represent another potential use for community digesters.

To summarize:

Heat energy, even from a single-family biogas plant, can be supplied at well below (less than one-ninth) the equivalent energy cost of electricity.

Ujamaa villages lend themselves readily to communal systems. Because of the economies of scale in biogas plant construction, such communal systems (e.g., schools, community latrines, community cattle-dung digesters in Masai settlements) should be seriously considered. (See Appendix K for significant regional variations in settlement patterns.)

TABLE 7 Cost of Supplying Cooking Fuel, Lighting, Mechanical Power, and Electricity by Biogas

Base Data	Cattle dung:	10 kg/cow/day
	Biogas production: @ 0.6m^3/kg dung =	0.6 m^3/cow/day
	Energy content of biogas @ 60% methane: (This means that about 4 kWh of biogas energy is available daily from each cow.)	6.4 kWh/m^3
	System lifetime:	20 years
	Conversion efficiencies Internal-combustion engine:[c] Electrical generator:	 25% 90%
Plant Cost	Single-family plant (3 m^3)	Sh. 6,000
Financing Costs[a]	Single-family plant Sh. 6,000 @ 10% for 20 years:	Sh. 705/yr
	Engine/generator to provide 1 kWh/day Sh. 5,400[d] @ 10% (5 hr/day)	Sh. 5,940/yr
	Engine to provide 1 kWh/day mechanical energy Sh. 3,200[d] @ 10% (4 hr/day)	Sh. 3,520/yr
Energy Costs[b]	Cooking and lighting directly by gas (20 kWh/day)	Sh. 0.10/kWh
	Cooking and generation of electricity @ 1 kWh/day	Sh. 18.2/kWh
	Cooking and generation of mmechanical power @ 1 kWh/day	Sh. 11.6/kWh

(a) Based on amortization of loan in equal yearly installments.
(b) Cost of energy production only--does not include cost of appliances, or cost of collecting dung.
(c) Efficiency at peak loading. At lower loading rates, engine efficiency would drop off rapidly, with consequent higher gas requirements.
(d) Retail costs, Dar es Salaam, August 1977.

WINDMILLS

Windmills had long since proven themselves in Holland and the plains of the United States when they were driven out of existence by rural electrification, originally based on coal but later on by cheap oil--now a thing of the past. They have been used to pump water for drinking and irrigation, and to generate electricity.

Wind-driven generators are available commercially with up to 15 kW rated power. Larger units up to 200 kW outputs are in the research and development stage. Electricity systems based on wind power require some sort of energy storage system if electricity is needed on demand, since wind conditions may not always be sufficient. The storage system used to date has been lead-acid storage batteries, which are available for approximately $100 - $150 per kWh. Lifetimes of these batteries range from 6 to 10 years depending on the umber of units and the charging/discharging cycles.

In Tanzania, a few windmills are already being tested for their applicability. The types of windmills, and a short description, are listed below:

1.	Location:	Kurasin, Dar es Salaam (Maji godown)
	Type:	Fan mill, water pumper
	Diameter of Rotor:	6 m--18 blades
	Height Above Ground:	15 m
	Transmission System:	Through 10-ton Bedford truck near axle through a vertical rotary shaft step-up in transmission 1:7
	Starting Speed:	2.5 m/sec.
	R.P.M.:	10 of the fan mill
	Pumping Height:	15 m
	Supporting Structures:	4-pole steel truss
	Purpose of Construction:	Prototype for testing
2.	Location:	Department of Electrical Engineering, University of Dar es Salaam
	Type:	Savonius Rotor (made up of 3 drums)
	Diameter:	1 m
	Height Above Ground:	4 m
	Transmission System:	Pullys connected to a 12-volt dynamo with rubber belt
	Supporting Structure:	Wooden pole-frame
	Purpose of Construction:	Research and student demonstration for generating electricity
	Prototype Costs:	Sh. 500 to 600 without the generator
3.	Location:	Tandale, Dar es Salaam Tanzania Food & Nutrition Center
	Type:	Fan mill, water pumper
	Diameter:	3.6 m--6 blades
	Height Above Ground	10 m
	Transmission System:	A shaft system operating a piston pump. Thirty-eight cm stroke

Starting Speed:	2 to 3 m/sec.
Pumping Height:	10 m
Supporting Structure:	3-pole steel truss
Pumping Capacity	100 m^3/day at average wind speed of 5.6 m/sec. (predicted output)
Purpose of Construction:	Water pumping for a small irrigation project
Prototype Cost:	Sh. 4,000 for material and 100 hours of labor--approximately Sh. 3,500: Total cost Sh. 7,500.
4. Location:	University of Dar es Salaam
Type:	Wind charger type (propeller blades, not yet installed)
Diameter:	3.6 diameter; 2 blades, wooden
Height Above Ground:	8 m
Transmission System:	Pully connected to a 12-volt dynamo with a rubber belt. A brake system installed together
Supporting Structure:	A single wooden pole
Purpose of Construction:	Research and student demonstration
Output:	1/2 kW or 1 h.p. at 400 r.p.m.
Phototype Cost:	Sh. 10,000, including generator.

Applicability to Village Tasks

There are many villages where water must be brought in by hand and where human muscle is the chief source of energy--not only for supplying water, but also for grinding grain, gathering fuel for cooking, and most other work. Windmills, where the proper wind conditions exist, can take over for some of these tasks. They can be used to pump water for drinking and irrigation, grind grain, or generate electricity (which can, in turn, be used for a variety of purposes).

Costs

The use of windmill generators to supply a village's proposed electrical energy needs was considered in this exercise. However, even though costs can be reasonably well estimated, wind-velosity/duration measurements must be made to determine the suitability of any proposed site before a windmill project is seriously contemplated.

The estimates are based on several assumptions. Windmill generators of a size that is fairly available and large enough to provide significant amounts of power for village use could be expected to produce 10 kW at wind sppeds of 20 mph (9 meters per second). Winds of 18 - 22 mph are not infrequently reported in the lake and coastal regions of Tanzania, with the higher speeds occurring during the day. In such areas, it would be reasonable to assume that such winds might be available 25 - 30 percent of the time, in the absence of wind-

TABLE 8 Cost of Supplying Electricity by Means of Windmill Generators

Base Data	Useful life of windmill generator	15 years
	Lifetime of batteries	6 years
	Efficiency of batteries	85%
Equipment Costs	Windmill generator (10 kW)	Sh 170,000
	Wiring, controls	Sh 42,000
	Installation	Sh 42,000
	Battery storage (100 kWh @ 85% efficiency) 118 kWh @ Sh 800/kWh	Sh 94,000
	Total equipment costs (approx.)	Sh 350,000
Financing Costs (a)	Windmill generator, wiring, installation Sh 254,000 @ 10% for 15 years	Sh 33,000/yr
	Batteries Sh 94,000 @ 10% for 6 years	Sh 22,000/yr
	Total cost of financing (approx.)	Sh 55,000/yr
Cost of Electricity	Total energy generated	36,000 kWh
	Unit cost	Sh 1.5/kWh

(a) Based on amortization of loan in equal yearly installments.

NOTE: In many places, maintenance cost estimates of commercial systems usually run about 5 percent of initial capital cost per year. This would add about Sh 0.5 to the cost of the electricity per kW. However, this can vary either way significantly depending upon the location.

velocity/duration measurements. This would mean that some 100 kWh daily would be provided, on the average, with electricity costs of less than Sh 2/kWh. It means, also, that to provide the proposed 300 kWh daily to a village of 300 families, three such installations would be required. If the task is pumping water, serviceable wind pumpers can be made with substantial savings by using local materials and skills. In the Omo River Valley in Ethiopia, for example, simple sail wind pumpers were built with Ethiopian materials following a design long used in Crete. The cost of mills that pumped 800 imperial gallons of water per hour to an elevation of 9 feet in 13 mph winds was only $375 for each sail mill.

PHOTOVOLTAIC POWER GENERATORS

Photovoltaic power supplies (solar cells) are semiconductor devices that generate electrical power when exposed to light. The electric power is produced directly from the light with no mechanical motion. This process, discovered in the early 1950s, is a consequence of the same physical properties of the semiconductors that make transistors work. The devices produce DC electric current with no environmental pollution such as noise or exhaust gases. The solar cells are inherently very reliable; however, as with any electrical device, the electrical contacts must be protected from moisture to prevent corrosion. This is done by encapsulating the semiconductor materials with a transplant material such as glass.

The amount of power generated by the power supply depends on the amount of light falling on the array of solar cells. In their simplest form, these arrays are flat plates on which the individual solar cells are placed, with plates mounted in a fixed position facing the noontime sun. The peak power is generated at noon when the sun shines directly on the panel, with decreasing amounts of power being produced in the afternoon as the angle between the flat plate and the sun increases. There is no power produced after sunset or before dawn.

For village applications, the stand-alone capability of these devices may be their single most desirable feature. The fuel is the sunlight itself, and because there are no moving parts, mechanical maintenance is rarely required. The analysis of the cost of supplying electrical power by a solar-cell array was based on a cost estimate of US$20/$W_p$.* Although in a recent large-scale purchase by the U.S. Government the cost was US$15/$W_p$, a cost of US$20/W_p was used in these estimates on the assumption that the more favorable price would not be available for an initial small-scale purchase.**

---

*W_p = peak watt.

**Since this was written the price has fallen below $12/$W_p$.

Cost calculations are summarized in Table 9.* The size of the array needed to supply 300 kWh daily was based on World Meteorological Organization (WMO) insolation data for Tanzania.** These figures indicate that an array with a peak power capacity of one kilowatt will

TABLE 9 Cost of Supplying Electricity by Means of Photovoltaic Generators

Base Data	Lifetime of silicon solar cells	20 years
	Lifetime of batteries	6 years
	Efficiency of batteries	85%
	Cost of silicon solar cells	Sh 160/W_p (a)
	Cost of batteries	Sh 800/kWh
Equipment Costs	Solar-cell array 60 kW_p (b) @ Sh 160/W_p	Sh 9,600,000
	Battery storage (300 kWh @ 85% efficiency) 353 kWh @ Sh 800/kWh	Sh 280,000
	Total equipment costs (approx.)	Sh 10,000,000
Financing Costs (c)	Solar-cell array Sh 9,600,000 @ 10% for 20 years	Sh 1,100,000/yr
	Batteries Sh 280,000 @ 10% for 6 years	Sh 64,000/yr
	Total cost of financind (approx.)	Sh 1,200,000/yr
Cost of Electricity	Total energy generated	110,000 kWh/yr
	Unit cost	Sh 11/kWh

(a) W_p = peak watt
(b) See text.
(c) Based on amortization of loan in equal yearly installments.

produce, on the average, 5.3 kWh daily. Thus, for 300 kWh/day, an estimate of 60 kW was used. An interest rate of 10 percent per annum, currently prevailing in Tanzania, was used to calculate financing costs. The estimated cost of energy provided by photovoltaics, Sh 11/kWh, is approximately 12 times the average current cost of grid electricity in Dar es Salaam.

*In view of the uncertainties in the cost estimates, all numbers are given only to two significant figures.

**World Meteorological Organization, average of data for June 1966.

In view of the targeted drop in the cost of photovoltaic devices (the U.S. Department of Energy looks to a cost of US\$0.50/W_p by 1985 or earlier) it is interesting to see how sensitive the electricity cost is to the array cost. For an array cost of Sh 4.1/W_p (US\$0.50/W_p), the total system cost for this sample would be Sh 528,000, with the same battery costs assumed. The annual cost would then be Sh 94,000 and the cost of electricity Sh 0.83/kWh, or 10 percent less than the current cost of electricity from the grid. If the electricity is used only when generated so there is no "on demand" capability of the system, this cost becomes Sh 0.38 kWh, or less than half the urban grid price. The "break-even" array cost, i.e., the cost of photovoltaics that would enable on-demand electricity to be generated at the average current selling price in Dar es Salaam, would be Sh 5.28/W_p or US\$0.64/W_p. Thus, the use of photovoltaic devices for the generation of electricity would, under these assumptions, be economically competitive with grid electricity in less than 10 years. Moreover, for any village that wants small amounts of electricity now (e.g., enough to power a two-way radio) but is not within reach of the grid (to be discussed later), photovoltaic devices may already be cost-effective compared with conventional alternatives.

LOW TEMPERATURE APPLICATIONS

Perhaps the simplest means of collecting and using solar energy is to allow the available solar radiation to provide low-grade heat for drying food, heating water, space heating, distillation, and other uses. Low-grade heat can also be used with an ammonia or lithium bromide absorption cycle for cooling or refrigeration. In this area, the greatest challenge is adapting these technologies for village use by developing prototype equipment that can be largely manufactured locally, using indigenous materials and labor, and that can be maintained at the village level.

Three low temperature solar applications were selected as having major importance for Tanzanian villages: distilling water, drying agricultural products, and solar refrigeration. Solar heating and hot water heating would only be needed in the coldest parts of the country.

Solar Stills

In many villages in Tanzania, a dependable supply of pure drinking water is not available except at considerable distance from the village center. If the mineral content of the water is greater than 0.2 percent, it is not fit for consumption by humans or animals. (The average mineral content of seawater is 3.5 percent.) Solar stills use the evaporation condensation process to convert brackish water (mineral content greater than 0.2 percent) into pure drinking water.

A simple solar still consists of a flat evaporating tray resting horizontally on an insulating support and covered tightly, either with a single inclined glass or plastic pane forming an L-shape (Figure 1) or

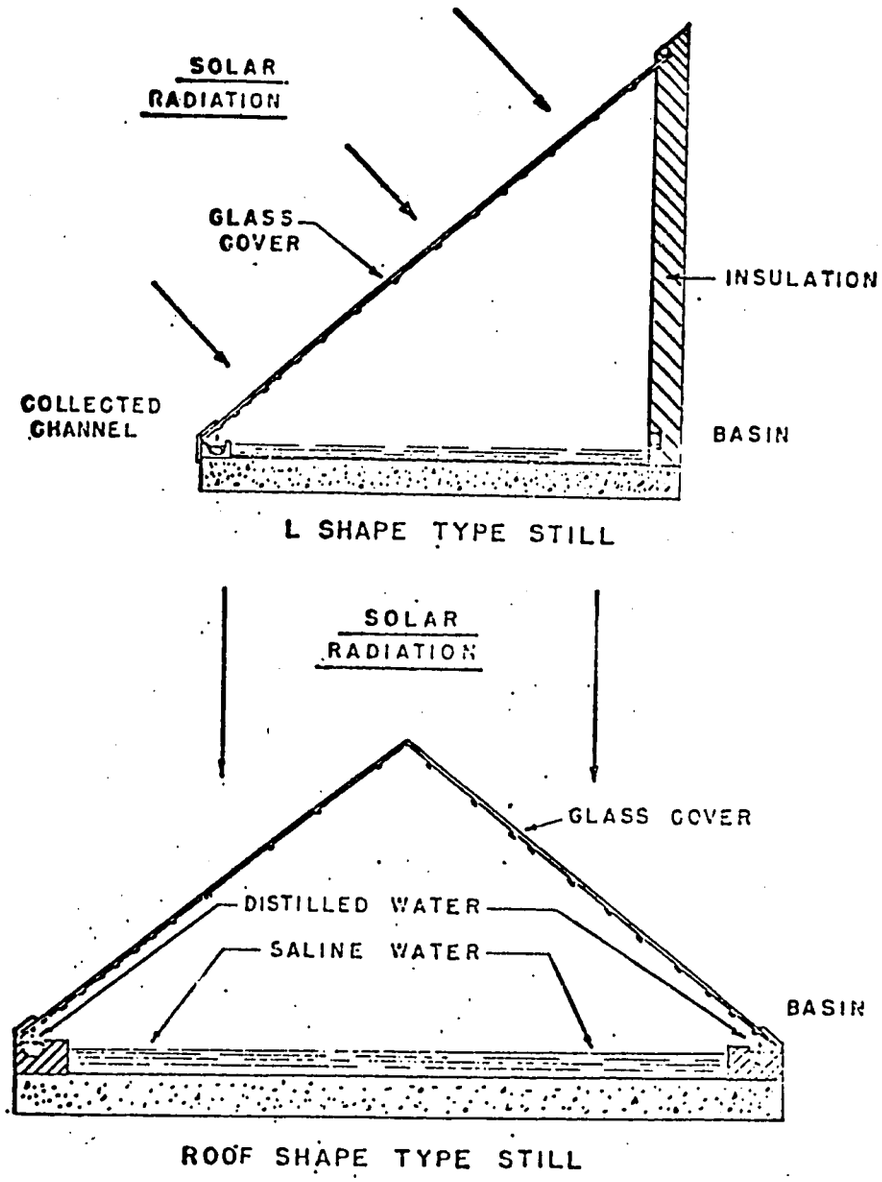

FIGURE 1 L-Shape Solar Still (Upper) and Roof-Shaped Solar Still (Lower)

with two inclined glass or plastic panes forming a roof shape. Solar radiation penetrating the glass cover warms the brine in the evaporating tray, producing an excess of water vapor inside the still, and the enclosed air becomes nearly saturated. Thus, vapor condenses at the inner surface of the glass cover, which is at a relatively lower temperature than the enclosed air. The condensed water slides down to the collecting channels in thin films. The theory of solar stills has been developed in a system of equations based on heat and mass transfer laws. Figure 2 illustrates a large solar still system that could be used to supply a village.

The efficiency of a solar still is defined as the ratio of the output of the still to what the output would be if all the incident solar radiation were used in the conversion processes. For a roof type solar still, the efficiency is typically as follows:

Solar Radiation Received on Horizontal Surface (kWh/day)	Daily Production of Pure Water (Liters per m^2 horizontal surface)	Efficiency of Solar Still (%)
3	0.5	5
4	1.4	14
5	2.5	25
6	3.1	31
7	3.5	35

Energy losses from this kind of device are caused by reflection on the glass surface (20 percent), absorption (5 percent), reflection from the bottom (5 percent), and radiation (15 percent).

Since the output of a solar still is normally pure water containing no minerals at all, it is often advisable to mix in a small amount of the brackish water to raise the mineral content of the drinking water to the desired level.

A Tanzanian village usually receives about 5 kWh/day of solar heat, so such a still should produce about 2.5 liters per day or about 900 liters per year from each square meter of area covered by glass as if a solar still costs about Sh 150 per m^2 for construction materials such as glass, sealant, cement, plastic pipe, and insulation and the cost of the still is amortized at 10 percent per year, then the cost of water is Sh 15 per 900 liters, or 60 liters per shilling (0.2 cents per liter). As a comparison, if 500 liters of water are transported 20 km (each day) at a cost of Sh 2 per km, the cost of the water is one cent per liter. No consideration is given to labor costs, but it is expected that the labor required to build and operate the solar still will also be less than the labor required to transport water from a distance.

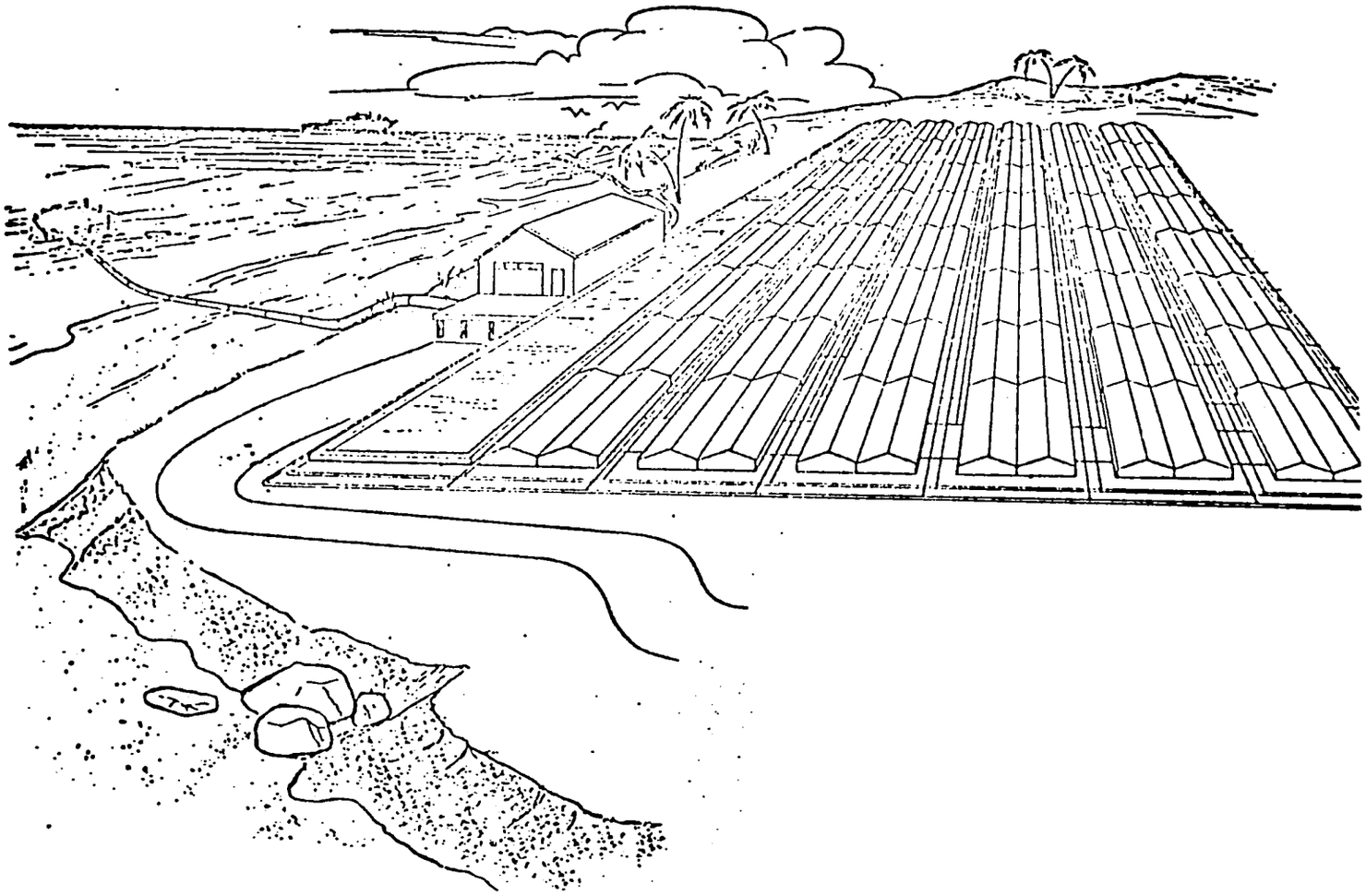

FIGURE 2 Large Solar Still

Solar Drying

Tanzania is predominantly an agricultural country. Most food and cash crops need to be dried in one way or another before they can either be consumed or sold as export materials. From time immemorial sun drying of crops has been the most common method, of all the direct uses of solar energy, this is perhaps the most ancient and widespread. The traditional methods differ from place to place, but they involve spreading material in thin layers and thereby exposing them to the sun to dry. Solar dryers typically place the food in solar-heated chambers or cabinets that protect the food from weather, animals, and insects. Crops traditionally dried include maize, coffee, beans, cocoa, grapes, cassava, prunes, peaches, peas, cauliflower, barley, and wheat. Fish and other meats are also dried to prevent spoilage.

Solar dryers hasten the drying process and result in a higher quality food product than that yielded by conventional sun drying. Solar drying also greatly reduces food losses to animals, insects, and bad weather.

Types of crops and the type of solar dryers appropriate for each are listed as follows:

Maize:	Open air or tray dryers
Coffee:	Open air or tray dryers
Beans, Cocoa:	Cabinet dryers
Grapes:	Rack dryers
Cassava:	Vertical tray dryers
Fruit:	Chamber dryers
Grain, Barley, Wheat:	Chamber on tray dryers, forced circulation
Bananas:	Rack dryers
Peanuts:	Chamber dryers

Solar dryers can usually be locally fabricated using largely indigenous materials. Solar drying techniques could be productively utilized in almost every village that produces agricultural crops, as well as in fishing villages.

Solar Refrigeration

In the basic absorption/refrigeration system the working fluid for the system is a solution of refrigerant and an absorbent that have a strong chemical affinity for each other. For example, in the ammonia cycle the refrigerant is ammonia and the absorbent is water. As shown in Figure 3, heat is added to this solution in the generator; as a result, the refrigerant is vaporized and a mixture weak in refrigerant concentration is left behind. The heat is then removed from the vapor and the vapor is liquified in the condenser. The liquid refrigerant is then available for expansion from the high pressure portion of the system (generator and condenser) into the low pressure evaporator wherein

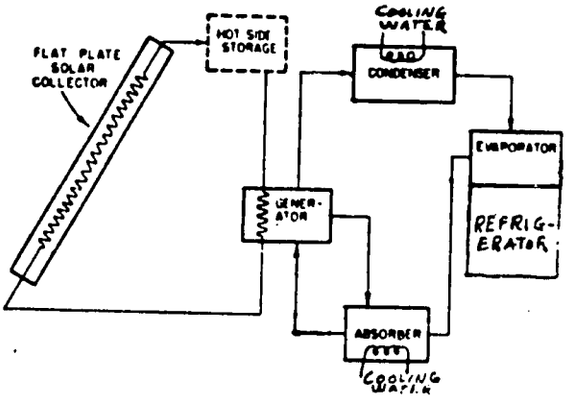

(a). Schematic diagram of a continuous solar refrigerator with flat-plate collector. Heat exchangers for sensible heat recovery are not shown.

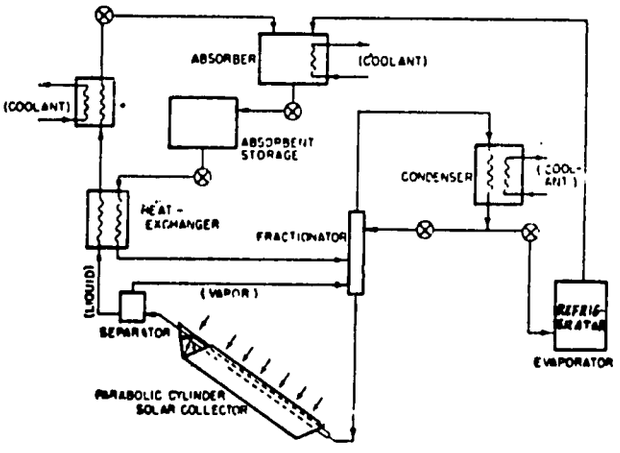

(b). Schematic diagram of an intermittent absorption cooler which includes a fractionator and a heat-exchanger for sensible heat recovery

FIGURE 3 Illustrations for the Solar Refrigeration Device

Source: Chung, R. and J. A. Duffie. 1964. "Cooling with Solar Energy," Proceedings of the U.N. Conference on New Sources of Energy, Vol. 6, p. 20.

vaporization of the refrigerant occurs and cooling is achieved. The vaporized refrigerant is next recombined in the absorber with the absorbent mixture from which it was initially obtained. Since this recombination reaction produces heat, heat is removed from the absorber to maintain its temperature at a point low enough to assure a high chemical affinity between the refrigerant and the solution. The absorber solution, now rich in refrigerant, can be pumped back into the generator so the cycle can continue. Since refrigerant-weak solution must be circulated continuously from the high temperature generator to the low temperature absorber, and strong solution must circulate in the opposite direction, the recouperator shown in the diagram is required to minimize the heat losses associated with fluid transfer between these two components.

The properties of absorption system working fluids are such that the absorber temperature (determined by the heat rejection temperature) and the refrigerant concentration in the absorber determine the affinity of the solution for the refrigerant and hence the pressure in the absorber. The absorber pressure is equal to the evaporator pressure, which determines the temperature of the evaporator. Similarly, the temperature of the condenser determines its pressure and hence the pressure in the generator. This pressure and the concentration of refrigerant in the generator determine the temperature at which it must be maintained to assure continued vaporization of the refrigerant. The desired evaporator temperature and the available heat rejection temperature determine the refrigerant concentration required in the absorber. Since the refrigerant concentration in the generator must be less than that in the absorber and since the heat rejection temperature determines the condenser temperature, one is constrained to generator temperatures greater than a minimum value at each heat rejection temperature.

The ammonia cooling units (Figure 3) can be simply constructed with no moving mechanical parts. The collectors, if located below the generator, provide heat transport by thermal siphoning. This technique of heat transport without the necessity of using a pump has been successfully employed in a number of solar water pumps throughout the developing world. In terms of heat collection and transport, the Sophretes water pumps are very similar to the arrangement that would be used.

Heat from the solar heated water causes the ammonia/water solution in the generator to boil. A two-phase solution rises through a column, and the ammonia vapor becomes separated from the ammonia solution. The less concentrated water/ammonia solution flows into the absorber, which is physically located in a higer elevation than the generator. At the same time, the ammonia vapor flows into the condenser where heat is rejected by convection into the atmosphere. Liquid ammonia from the condenser then flows into the lower pressure evaporator coil inside the cold storage unit, where the liquid again vaporizes and the vaporized ammonia vapor is transported back to the absorber where it is reabsorbed into the less concentrated ammonia solution. This solution flows by gravity into the generator.

This cycle is very similar to the lithium bromide absorption cycle used by Arkla-Servel in its Arkla 501 WF absorption and similar units. These units were used in the earlier solar houses and require no mechanical moving parts for the circulation of the refrigerants or absorbent. Ammonia units have not been used recently because of the toxicity of ammonia gas. As long as these units are located outside and away from heavily populated locations, this toxicity problem should not be a significant safety hazard. It is believed that ammonia absorption units of this type offer a substantial or a large potential for solar refrigeration in developing countries where electricity is not available and where there are substantial benefits to be gained by the use of refrigeration for the prevention of spoilage of scarce food and the storage of vital medical supplies. Properly designed and constructed, units such as this should have the potential of exhibiting high reliability due to the absence of mechanical moving parts.

Village Applications

Solar-powered cooling units based on the ammonia absorption cycle should be used in areas where electric power is not available for the storage and preservation of foods (milk, produce, etc.) and medical supplies. Solar refrigeration units based on the ammonia absorption cycle could be used, for example, in fishing villages to keep the fish from spoiling. The cost of cooling and preserving a catch of 500 kg, typical for a day's fishing, was calculated based on the use of local materials and labor for the container and its insulation and commercially manufacturable collector and absorption-cooling units. Estimates were based on the assumption that ammonia-based cooling systems could be used, since the units would be located out of doors, and that they could be constructed in Tanzania. The cold storage unit was assumed to be 2-1/2 m long, 1 m wide, and 1 m deep, the cost of the absorption chiller was estimated by scaling down the costs of available machines (which are larger by a factor of 3 to 4 than would be needed), and current U.S. costs of collectors were used. The results based on these assumptions are shown in Table 10. They indicate that solar refrigeration would cost only slightly more than the current cost of electricity alone, assuming a 5-year equipment life.

Fish preservation would be highly desirable in the coastal villages of Tanga, Dar es Salaam, Lindi, and Mtwara; in lakeshore villages (Bukoba, Mwanza, Mara, Ruvuma, Kigoma, and Myeba); riverside villages (Morogoro, Kigoma, and Ruvuma); areas with dams (Kilimanjaro); and island areas (Ukerewe and Mafia).

At present a few large 5-ton electric-powered refrigerators are available in areas such as Ukerewe and Magu and in Dar es Salaam, Mwanza, and other regional centers under Chakula Baraju (NCCO). In many Tanzanian villages, large economic losses periodically occur due to the total lack of refrigeration.

TABLE 10 Cost of Solar Refrigeration of Fish

Base Data	Lifetime of equipment	5 years
	Weight of fish (M) caught daily	500 kg
	Specific heat of fish (Cp)	(Est) 1 cal/gm•°C
	Average storage time (t)	3 days
	Average ambient temperature	25 °C
	Cold storage temperature	5 °C
	Surface area (A) of insulated box	12 m^2
	Thermal conductivity (K) of insulation[a]	10^{-4}cal/sec•cm^2•°C/cm
	Insulation thickness (d)	20 cm
	Hours of sunshine (average)	6
Heat Requirements	Cooling (Qc):	
	$Q_c = M \cdot Cp \cdot \Delta T =$ 10,000 kcal/day	
	Losses (Q_L):	
	$Q_L = \frac{K \cdot A \cdot \Delta T}{d}$ 1,000 kcal/day	
	Total cooling requirement	11,000 kcal/day
	Total heat requirement (@ coefficient of performance - 0.5)	22,000 kcal/day
Equipment Cost	Chiller (2/3 ton ≃ 2,000 kcal/hr)	(Est) Sh 20,000
	Collector (@ efficiency - 1/3) (15 m^2)	(Est) Sh 17,000
	Total equipment cost	(Approx) Sh 37,000
Financing Cost (b)	Sh 37,000 @ 10% for 5 years	Sh 9,800/yr
Cooling Cost	Energy required for cooling (22,000 kcal/day)	9,200 kWh/yr
	Unit cost	Sh 1.06/kWh

(a) Based on the use of a material such as sisal, with a thermal conductivity similar to that of sawdust.
(b) Based on amortization of loan in equal yearly installments.

CHAPTER VI

CURRENT CONVENTIONAL ENERGY IN TANZANIA

DISTRIBUTION GRID TO A VILLAGE

This network is projected on the basis of either extension of transmission lines to cover the country to within 20 km of each village or construction of distribution systems to villages that lie within 20 km of present transmission lines. In view of the overwhelming cost of the first alternative, workshop participants gave serious thought only to the first alternative, workshop participants gave serious thought only to the second. On this basis, it was assumed that a village of 300 families would occupy about 16 km^2 at a distance of some 20 km from a 33-kV transmission line. A summary of the analysis is given in Table 11. Transmission line costs, transformer 33 kV to 11 kV at (500 kW), and substation 11 kV to 400 kV at 5 kW costs, and connection costs came to an estimated total of about Sh 2,180,000. Financing costs, based on a 20-year life for the system and a 10 percent annual rate of interest, would be about Sh 230,000/year. If this system were fully utilized (i.e., load factor of 1.0), the unit cost would be Sh 0.05/kWh. Usually, however, a grid system is poorly matched to village needs. For example, in the case considered, a village of 300 families has a 500-kW supply continuously available--much more than it can reasonably use on a continuous basis. A more reasonable load factor would be 0.1, which would make the transmission costs Sh 0.58/kWh. With the average generating cost in the existing grid Sh 0.30/kWh, the cost for delivered electricity by this scheme would be Sh 0.88/kWh--a figure comparable to current consumer prices in Dar es Salaam. This modest cost, it must be remembered, would be available only to those fortunate few villages within 20 km of the existing grid--assuming, of course, that TANESCO would be willing to sell electricity to the distribution point for its cost of generation.

SMALL-SCALE DIESEL GENERATION

In view of the ubiquity of diesel electric generators, it is instructive to examine the cost of generating electricity by this technology. Table 12 summarizes the cost figures, based on current retail prices in Dar es Salaam. At a cost of Sh 2.3/kWh for diesel-generated electricity, it is apparent that, with the exception of photovoltaics at present prices

TABLE 11 Cost of Supplying Electricity from Existing Grid

Base Data	Grid voltage	33 kV
	Distance from grid to village (assumed)	20 km
	Distribution voltage to substation	11 kV
	Local distribution voltage	400 V
	Number of substations assumed[a]	45
	Average hook-up distance for 45 substations and 300 families in 16 km^2 village	0.2 km
Fixed Costs	High-voltage step-down transformer 33 kV to 11 kV, 500 kW @ Sh 1,000,000/500 kW	Sh 1,000,000
	11-kV transmission line 20 km @ Sh 500/km	Sh 10,000
	Substation transformers 11 kV to 400 V, 50 kW @ Sh 10,000/50 kW	Sh 450,000
	Local distribution lines (400-V) 300 families @ 0.2 km/family and Sh 12/m	Sh 720,000
	Total fixed costs	Sh 2,180,000
Financing Cost[b]	Sh 2,180,000 @ 10% for 20 years	Sh 256,000/yr
Cost of Electricity[c]	Total annual capacity 500 kW x 8,760 hrs/yr	4,380,000 kWh
	Unit cost at capacity (load factor = 1)	Sh 0.06/kWh
	Unit cost at 10% load factor	Sh 0.58/kWh

(a) Because local distribution is so expensive, in this example it is cost effective to underutilize the substations by using many of them to reduce local hook-up distance.
(b) Based on amortization of loan in equal yearly installments.
(c) This calculation represents the unit cost of transporting electricity from the 33-kV transmission line to the consumer. It does not take into account maintenance costs for the system, nor the cost of electricity delivered to the point where the 11-kV line starts.

TABLE 12 Cost of Supplying Electricity by Small-Scale Diesel Generators

Base Data	Operation	5 hr/day
	Useful life (This means about 10 years.)	20,000 hours
	Fuel consumption	0.35 liters/kWh
	Overhaul	every 5,000 hours
Fixed Costs	Retail cost, k-kW diesel generator	Sh 29,000
	Overhaul costs	Sh 15,000
	Installation	Sh 2,900
Annual Costs	Equipment and installation Sh 32,000 @ 10% for 10 years[a]	Sh 5,200/yr
	Overhaul Sh 15,000 @ 10% for 3 years[a]	Sh 6,000/yr
	Maintenance, operator	Sh 7,000/yr
	Total annual costs (less fuel) (approx.)	Sh 18,000/yr
Cost of Electricity	Total energy generated annually	11,000 kWh
	Unit cost, less fuel	Sh 1.6/kWh
	Fuel cost, @ Sh 2/liter	Sh 0.7/kWh
	Total unit cost	Sh 2.3/kWh

(a) Based on amortization of loan in equal yearly installments.

and biogas-generated electricity, the alternative technologies considered in this discussion would be preferable on a unit-cost basis. Even photovoltaic devices would (given our calculations) be preferable in a few years.

One of the problems with solar energy technologies that depend on wind or sunshine or even flowing streams is that these are intermittent sources of energy. In the United States such technologies require a backup system based, for example, on gas, oil, or electricity. The cost of the solar-based system plus the backup system may be prohibitive. However, for many village tasks in the developing countries, the backup system may be prohibitive. If the wind fails to pump water, the villagers simply revert to carrying it on their heads; if the sun fails to shine to refrigerate fish, they are smoked over a wood fire, etc. Moreover, a number of tasks can be performed whenever primary energy is available--e.g., grain can be ground or water pumped and then stored for later use.

CHAPTER VII

METHODOLOGY AND IMPLEMENTATION

In order to avoid wasting time and funds implementing questionable projects, a subcommittee was set up to discuss and report on a methodology for assessing the appropriateness of any type of technology in a village setting. Although the methodology outlined here pertains to the provision of water, the steps are applicable to all technologies.

An analysis was made at the village level of factors affecting supply and demand for water. Two types of villages were considered--villages provided with conventional pumping systems and those not supplied with any installations by the Government authorities. Given the large number of villages not equipped with conventional pumping systems, the workshop decided to give priority to these villages in their deliberations.

DESCRIPTION OF THE PROBLEM

One cannot propose to research the problem of water supply without taking into account its effect on village health, sanitation, and a list of other factors. If a particular water system is to be replaced by another, then the question of alternative employment for any displaced worker needs consideration. Hence, a clear definition of the problem viewed in its overall context is essential.

DEFINITION OF DEMAND

If water supply for a rural community is considered as the problem requiring solution, the following data is required:

- The population to be served;
- The quality and quantity of the water demand;
- The availability of water from the sources proximate to the village and its quality; and
- The pumping head--both static and dynamic.

There may, of course, be seasonal variations in any of these factors. It is axiomatic that water which is pumped or purified should be used with some measure of conservation. Particularly in the more arid regions, a careful assessment of climatic factors is essential, with particular reference to possible rainfall collections to supplement water supply systems.

ANALYSIS OF EXISTING SOLUTIONS

A detailed examination must be made of existing conventional pumping methods for village water supplies. As conditions in villages and climatic and cost factors vary markedly from one region to another, it is essential to examine each of the following potential components in designing pumping systems:

- Animal and human power;
- Electrical-powered pumps;
- Diesel-powered pumps; and
- Hydraulic energy.

Each method must be examined with respect to its appropriateness to the village to be served. Technical, economic, and social considerations for each method must be detailed so that the advantages and disadvantages to each system can be analyzed. In this way, not only can cost factors be determined, but each method can also be assessed in relation to the national energy picture. When the conventional systems have been analyzed, they can be compared to options offered by systems powered by renewable energy systems.

FACTORS AFFECTING THE USE OF RENEWABLE SOURCES OF ENERGY IN VILLAGES

It is essential to have adequate and reliable data on renewable energy sources--solar radiation, wind speed, hydraulic resources, and biomass qualities. The variation and reliability of each source must be examined before recommending it as a power source for a technical system powered by this source. For example, the ratio of direct to diffuse solar radiation is critical in determining the type of solar energy collecting system that might be proposed for water-pumping purposes. It is essential that complete and adequate meterorological data be available. Simple meteorological instruments are recommended for this.

The variation of average wind speed must be known on an hourly basis in order to estimate the output performance of a windmill system in a particular location. This is because the power available from windmill a is not directly proportional to increased windspeed, but increases in some instances as the cube of the windspeed. With respect to biomass directly or photosynthetic production such as animal or organic wastes, it is essential to monitor the variation in the available supply over a given period of time. The flow rate of small streams that offer potential for mini-hydro plants must be known as a function of the time of the year to ensure the availability of an adequate supply.

Next, a complete assessment of the social factors involved in the use of each system is important. An interdisciplinary approach is necessary to ensure that appropriate systems are selected for each individual site. It is important to bear in mind that the ability of villages to participate in the decision-making process, as well as their ability to control the pumping systems should be basic in the pump-selection process.

In applying technical considerations for using renewable energy, equipment with well-known operating characteristics must be utilized. Experimental equipment whose precise output, performance, and durability are not well-known should certainly be avoided in examining village-level applications. Renewable energy systems are generally more difficult than many conventional systems whose operating and management characteristics are better understood.

Promising technological developments in the renewable energy field should be tested in national research institutions for a significant period before they are applied to villages on a large scale.

In conclusion, features of appropriate technology were discussed. It was noted that appropriate technology

- Meets a real need;
- Is compatible with local resources;
- Takes into consideration cultural, social, technological, economic and political background
- Involves systems and equipment that can be locally controlled;
- Preferably utilizes local resources;
- Permits control over imported resources;
- Produces a minimum of cultural disruptions;
- Is flexible;
- Is ecologically and environmentally sound;
- Is dependent on local R&D; and
- Enhances local creativity.

APPENDIX A

PARTICIPANTS

Tanzanian National Scientific Research Council (UTAFITI)

ASMAN, S. J. - Tanzania National Scientific Research Council, Box 4302, Dar es Salaam

BAKKEN, Arnt - Civil Engineer, Building Research Unit, P. O. Box 1964, Dar es Salaam

BITANYI, H. F. - Tanzanian National Scientific Research Council, Box 4302, Dar es Salaam

BWATHONDI, P. - Zoology Department, University of Dar es Salaam

CAPPELEN, P. - Architect, Building Research Unit, P. O. Box 1964, Dar es Salaam

DUWE, Jeremy Elias - Prime Minister's Office, P. O. Box 980, Dodoma

GONDWE, Vincent T. - Electrical Engineer, Maji, P. O. Box 9153, Dar es Salaam

GUJARATI, M. A. M. - Mechanical Engineering Department, University of Dar es Salaam, Box 35131

HIRJI, K. N. - University of Dar es Salaam

IDDI, R. - Building Research Unit, P. O. Box 1964, Dar es Salaam

ISHENGOMA, R. C. - Faculty of Agriculture and Forest, Morogoro

KAVISHE, D. J. - Mechanical Engineer i/c, Mali Asili na Utalii, Box 1944, Dar es Salaam

KHALFAN, M. M. - Capital Development Authority, P. O. Box 1, Dodoma

KIMARYO, S. J. - Assistant Manager Operations, TANESCO, Box 9024, Dar es Salaam

KIVAISI, R. T. M. - Department of Physics, University of Dar es Salaam

LEE, Douglas H. - Capital Development Authority, P. O. Box 1, Dodoma

MABELE, R. B. - Director, Economic Research Bureau, P. O. Box 34096, Dar es Salaam

MACHAGGE, A. M. - Ministry of Education, P. O. Box 9121, Dar es Salaam

MAKALLA, T. M. - Capital Development Authority, P. O. Box 1, Dodoma

MASANJA, D. E. - Prime Minister's Office, P. O. Box 980, Dodoma

MASCARENHAS, Adolph C. - Director, BRALUP, University of Dar es Salaam

MAYIGE, C. N. - Physics Department, University of Dar es Salaam

MJUNGU, Y. B. - Physics Department, University of Dar es Salaam

MMARI, E. G. K. - Meteorologist, Analyst of East Africa, Meteorology Department, Box 3056, Dar es Salaam

MREMA, A. J. - Tanzania National Scientific Research Council, Box 4302, Dar es Salaam

MSAFIRI, P. A. - Meteorologist, Analyst of East Africa, Meteorology Department, Box 18004, Dar es Salaam

MUNGALA, P. M. - Faculty of Agriculture and Forest, Morogoro

MUSCHALIK, Mathias - Civil Engineer, Town Planning, Capital Development Authority, Box 225, Dodoma

MWOMBELA, P. - (Chairman) Tanzanian National Scientific Research Council, Box 4302, Dar es Salaam

MZEE, A. - Ministry of Water, Energy and Minerals, P. O. Box 9153 Dar es Salaam

NGANA, James O. - BRALUP, University of Dar es Salaam

NGULI, H. M. - Tanzania National Scientific Research Council, P. O. Box 4302, Dar es Salaam

NKOMA, U. S. - Physics Department, University of Dar es Salaam

NKONOKI, S. R. - Institute of Development Studies, University of Dar es Salaam, Box 35169

NNKO, A. A. - Physics Department, University of Dar es Salaam, P. O. Box 35063

PALLANGYO, P. T. - Mechanical Engineer, SIDO Headquarters, Box 2476, Dar es Salaam

PRAG, Maths - Architect, Building Research Unit, P. O. Box 1964, Dar es Salaam

REICHEL, R. - Faculty of Engineering, P. O. Box 35131, Dar es Salaam

SIKAWA, M. L. - Daily News, P. O. Box 9033, Dar es Salaam

STANLEY, R. J. - Project Coordinator, Arusha Appropriate Technology Project, Box 764, Arusha

TEMU, H. Y. - Hydrometeorologist (I), East Africa, Meteorology Department

TIBANYENDA, Cleophas G. - Agrometeorologist (C.II), East Africa, Meteorology Department

U.S. National Academy of Sciences (NAS)

HOWE, James (Chairman) - Senior Fellow, Overseas Development Council, Washington, D. C. (Economics)

BROWN, Norman L. - LDC Program Officer, Office of International Programs, Department of Energy, Washington, D. C. (Physical Chemistry, Energy)

LAWAND, Thomas A. - Director of Field Operations, Brace Research Institute, Macdonald College, McGill University, Montreal, Canada (Agricultural Engineering, Solar and Wind Energy)

REINING, Priscilla C. - Project Director, Office of International Science, American Association for the Advancement of Science, Washington, D. C. (Anthropology, East African Specialist)

WILLIAMS, Brown F. - Director, Energy Systems Research Laboratory, RCA Laboratories, Princeton, New Jersey (Solid State Physics, Photovoltaics)

WILLIAMS, J. Richard - Associate Dean for Research of the College of Engineering, Georgia Institute of Technology, Atlanta, Georgia (Physics, Engineering, Solar Energy)

Staff

BANNIGAN, Rose - Board on Science and Technology for International Development, Commission on International Relations, National Academy of Sciences, Washington, D. C. 20418

COPELAND, B. K. Wesley - Board on Science and Technology for International Development, Commission on International Relations, National Academy of Sciences, Washington, D. C. 20418

Observers

GRAHMBHATT, Pushkar - Engineer, REDSO/EA, U.S. Agency for International Development Mission, Box 30261, Nairobi, Kenya

KLEIN, Stephen - Deputy Director, Office of Development Resources, Bureau for Africa, Agency for International Development, Washington, D. C. 20523

APPENDIX B

AGENDA

Thursday, August 11, 1977

8:30 AM --	Opening Remarks	DR. PETER MWOMBELA Chairman, Tanzania Delegation Tanzania National Scientific Research Council
	Welcome Address	HON. AL NOOR KASSUM, M.P. Minister for Water, Energy and Minerals
	Response	DR. VERNON JOHNSON Director U.S. AID Mission to Tanzania
		MR. JAMES W. HOWE Chairman, National Academy of Sciences Delegation Senior Fellow, Overseas Development Council
	Commentary	
	"Energy Needs in the Villages"	
		DR. S. R. NKONOKI Institute of Development Studies University of Dar es Salaam
	"Villages in Tanzania"	
		DR. PRISCILLA C. REINING Project Director, Office of International Science American Association for the Advancement of Science

"Energy Needs in Tanzania"

DR. JEREMY ELIAS DUWE
Assistant Commissioner
Office of the Prime Minister

Phase I, Seminar: State of the Art of Solar Energy--Potential Applications at the Village Level

2:30 PM -- Presentation

"Space Heating and Cooling and Water Heating"

DR. J. RICHARD WILLIAMS
Associate Dean for Research, College of Engineering
Georgia Institute of Technology

"Distillation and Desalination of Water"

DR. THOMAS A. LAWAND
Director, Field Operations
Brace Research Institute, Macdonald College
McGill University

7:30 PM -- Dinner at Agip Hotel hosted by Dr. Peter Mwombela

Friday, August 12, 1977

8:00 AM -- Presentation

"Photovoltaic Electric Generation"

DR. BROWN F. WILLIAMS
Director, Energy Systems Research Laboratory
RCA Laboratories

"Solar Cooking, Drying of Crops, and Other Agricultural Products and Food Preservation"

DR. THOMAS A. LAWAND
Director, Field Operations
Brace Research Institute, Macdonald College
McGill University

2:00 PM -- "Concentrated Solar Applications"

DR. J. RICHARD WILLIAMS
Associate Dean for Research, College of Engineering
Georgia Institute of Technology

"Capital Development Authority Attitude Toward Solar Energy Utilization"

PROF. DOUGLAS H. LEE
Capital Development Authority

"Overview of U.S. Solar Energy Program"

DR. NORMAN L. BROWN
Country Program Specialist, Office of the Assistant Administrator for Internal Affairs
U.S. Department of Energy

Closing Remarks

DR. PETER MWOMBELA
Chairman, Tanzania Delegation
Tanzania National Scientific Research Council

Saturday, August 13, 1977

Phase II, Village Visits

8:00 AM -- Visit to Kimbiji

7:30 PM -- Cocktail party hosted by Dr. Peter Mwombela

Sunday, August 14, 1977

8:00 AM -- Visit to Chengeni and Kerege

Monday, August 15, 1977

Phase III, Workshop and Design of Projects

8:30 AM -- Plenary Session

"Statement of Objectives"

DR. PETER MWOMBELA
Chairman, Tanzania Delegation
Tanzania National Scientific Research Council

Discussion

"Specific Villages' Functions/Tasks to be Energized"

3:20 PM -- Working Group Sessions

"Current Energy Needs and Availability in Tanzanian Villages"

Arnt Bakken
T. M. Makalla
D. E. Masanja
Adolfo Mascarenhas
Priscilla C. Reining

"Institutional Factors"

Jeremy E. Duwe
James Howe
Stephen Klein
E. G. K. Mmari
D. H. Lee
Mathias Muschalik
H. M. Nguli

"Methodology and Possible Projects for Early Application"

D. J. Kavishe
M. M. Khalfan
Thomas A. Lawand
A. M. Machagge
A. J. Mrema
P. A. Msafiri
A. Mzee
U.S. Nkoma
S. R. Nkonoki
P. T. Pallangyo
J. Richard Williams

"Long-term Potential of Solar Energy for Tanzanian Villages"

S. J. Asman
H. F. Bitanyi
Norman L. Brown
Vincent T. Gondwe
M. A. Gujarati
H. Y. Temu
Cleophas G. Tibanyenda
Brown F. Williams

7:00 PM -- Reception hosted by Dr. Vernon Johnson at his residence

Tuesday, August 16 through Thursday, August 18, 1977

8:00 AM -- Working Group Sessions

Friday, August 19, 1977

8:00 AM -- Plenary Session

Reports by Working Groups

2:00 PM -- Closing Remarks

DR. PETER MWOMBELA
Chairman, Tanzania Delegation
Tanzania National Scientific Research Council

APPENDIX C

WELCOME ADDRESS
-- Hon. Al Noor Kassum

Mr. Chairman, Distinguished Guests, Participants, and Friends, on behalf of the Chairman of the Tanzania National Scientific Research Council, who is unavoidably absent today, I should like to welcome you all on the occasion of the opening of this historic Seminar/Workshop on Solar Energy Utilization in Tanzania. I call it historic because it is the first seminar/workshop of its kind to be held in Tanzania. I therefore consider it a great privilege to have been invited to open the meeting.

Mr. Chairman, before I make any observations on your seminar/workshop, I should like to seize this opportunity to take your minds back a little and give some background information on this seminar/workshop. The National Scientific Research Council, under whose auspices this seminar/workshop is being held, has eight specialist working committees from which the Council gets its expert advice. The terms of reference of these committees include the acquisition of knowledge from all sources, which is necessary for the effective implementation of their functions. One of these committees, the Committee on Natural Sciences and Natural Resources, had discussed the overall energy problem in this country, particularly in the rural areas. After a lengthy debate on the subject, it was finally agreed that a seminar/workshop on alternative sources of energy for the rural population be convened. On the basis of these

proceedings, the Chairman of the Council, Dr. W. K. Chagula, took the initiative to approach some international organizations which might co-sponsor an appropriate workshop in Tanzania. I am glad to note that the U.S. Agency for International Development (USAID) agreed to provide funds to cover the costs of experts to participate in the seminar/workshop and the National Academy of Sciences (NAS) agreed to make the services of six qualified experts available. Today we are witnessing the results of these commendable efforts.

With that brief background, I should like to take this opportunity to thank, and express my sincere appreciation to, both USAID, for providing the financial support, and the NAS for making available their very able staff to come over to Tanzania and participate in this seminar/workshop. I also wish to pay special tribute to Dr. W. K. Chagula, without whose initiative this seminar/workshop would perhaps not have materialized.

This seminar/workshop is particularly important, as it deals with the burning question of energy. Energy, as you all know, is a central issue today, since practically all activities are dependent in some way on one form of energy or another. Tanzania is a young and developing nation and needs to have access to various forms of inexpensive energy. She lacks the technical know-how for harnessing such energy and their effective usage.

In the report on Energy for Rural Development prepared for the National Academy of Sciences the first paragraph of the introduction reads as follows:

> Energy plays a larger role in man's struggle with the vagaries of nature than merely sustaining life. In The Economic History of World Population, Cipolla has said that the more successfully man can use his own energy output to control and put to use other forms of energy, "the more he acquires control over his environment and achieves goals other than those strictly related to animal existence." He then adds what is certainly obvious, but does not suffer from repetition--that fundamental to the utilization of

> nonmuscular energy is the problem of transforming it into the needed form "at a selected time and place and at convenient cost."

And the overview of the same report reads:

> The relationship between energy and economic development is as crucial in the less-developed countries (LDCs) as it was and continues to be in the industrialized nations. The process of economic growth is traceable in large part to the substitution of energy for muscle in the performance of every type of agricultural, industrial, and domestic task. Moreover, many of the pesticides, herbicides, and fertilizers on which successful agriculture in industrialized nations traditionally depends are also derived from energy (fossil fuel) sources. It is hardly surprising, then, that prospects for growth in critical sectors of the less-developed economies are linked, at least in part, to the developing and exploitation of energy resources available to them.

I have deliberately quoted this because within two paragraphs you have a complete philosophy ably and aptly stated.

Mr. Chairman, it is historical knowledge that man has for centuries been harnessing all sorts of energy and power. It will also be appreciated that most of the energy resources, apart from being a source of pollution, are also finite. Because of this, it is considered appropriate to investigate other means of direct harnessing of solar energy. Our country is not very rich in energy resources, but the solar intensity which it receives is comparatively high. This form of energy could be used on a small scale in villages where it can be put to various uses. The sun's effect on this country produces a variety of topographical features resulting in winds which can be harnessed and used for pumping water for domestic use and irrigation in the villages. It is clear, therefore, that the impact on the rural areas of our country, as a result of the availability of a less expensive and easily accessible form of energy can be quite profound.

Mr. Chairman, I have gone through the program of your nine-day seminar/workshop. I see that you are going to cover three important phases, which are necessary before any concrete proposals are made on the utilization of solar energy radiation. These are:

1. The state-of-the-art of solar energy and the application of the technology.

2. Energy consumption and requirements in selected villages.

3. Project design and follow-up activities.

I have also noted that in one of your reading documents, titled "Energy for the Villages of Africa," you have appended a hundred bibliographic titles. It is really amazing, the amount of documented literature that is available on the subject, and yet there is a very wide gap between what is already known and what is actually applied. I do hope that this seminar/workshop will primarily look into this considerable wealth of knowledge and suggest ways of matching the known technology with the prevailing problems of the majority of our people.

Your program also includes visits to some villages during the weekend. There you will be able to see and feel the magnitude of the problems which we face, some of which can perhaps be tackled by the use of solar energy. I should perhaps caution our visitors that this country has a wide range of diversified geographical regions, and therefore, the villages you are going to visit may not always be representative of the rest of the country.

After your visit to the villages I note that you intend to spend a good part of your time designing projects. Here, of course, you will enter into the complex subject of the choice of appropriate technology. It is complex because virtually all the technology we depend upon is imported from countries

where capital is plentiful and labor scarce. In any case, besides the fact that we live in an entirely different environment, we have to import expensive equipment which we can ill afford. I am confident that with the panelists' wealth of experience, coupled with the participation of local counterparts, this subject will be discussed thoroughly and meaningful conclusions will be drawn.

Mr. Chairman, it will be seen that the Government is very anxiously waiting for the outcome of this workshop. We look forward to collaborating with all of you in achieving the expectations of the Council. I am certain that the Tanzania National Scientific Research Council will, as usual, give high priority to those activities designed to promote the standard of living of our people and also benefit the other Third World countries which have similar problems.

Ladies and Gentlemen, it is my great pleasure to formally open this workshop. Thank you.

APPENDIX D

RESPONSE TO WELCOME ADDRESS
-- James W. Howe

Honorable Minister Kassum, Mr. Chairman, and Members of the Joint Workshop Group on Solar Energy for Rural Tanzania. I would like to talk about three things: first, a brief discussion of the interaction between energy and development; second, a sketch of the topic to be addressed in the next two days by the members of the NAS panel; and third, an identification of the panel members.

I. Energy and Development

Current consumption of energy in the world is very uneven, with the lion's share being used by the industrialized countries. For example, the average citizen of the United States consumes sixty times as much as the average citizen of India; in the case of Bangladesh and Mali, the ratios are 370 to 1 and 700 to 1. Now these comparisons, of course, are overstated because they leave out of account all of the traditional or noncommercial sources of energy such as firewood. These sources provide an estimated 50 percent of all the energy consumed in the developing countries. Moreover, they supply virtually all of the energy available to the people in the rural areas of those countries. This is an important part of the world, amounting to 50 percent of the people in Latin America, about 70 percent of those in Asia, and 85 percent of the

African population. Thus, it is evident that developing countries in general need to increase sharply their consumption of energy.

Of course, styles of development vary. A country may achieve its goals with an exceptionally wasteful pattern of energy consumption, as those in the United States or Canada, or it may adopt techniques that are designed to conserve energy, such as in China, Taiwan, and Sri Lanka. Dr. Harrison Brown has calculated that an individual in the rural areas of a very poor country may not use more than 15,000 calories per day for all purposes, including food, firewood, animal traction, etc. That is only about one-third as much as a suburban North American might use driving to and from work. At that low level, it is probably not possible to make much progress toward development.

At the village level, some of the tasks now performed in large measure by human energy or traditional sources include clearing, planting, weeding, irrigating (or watering livestock), harvesting, threshing (or decorticating, shelling, or husking), drying--which is important to avoid spoilage--transporting, grinding, cooking, heating (in cool areas), lighting, and (for certain purposes) refrigerating. In many cases there are shortages of labor during critical times in the crop cycle, which limit the crop area or the yield per acre or both. Hence, helping villages develop better energy sources is not only a matter of reducing human drudgery but also of increasing economic production.

Unfortunately, almost all calculations of future supply and demand of oil--the most widely used commercial fuel--show that between 1985 and 1995 world demand for oil imports will exceed the ability of OPEC countries to export and prices will likely explode again as they did in 1973-74. The Third

World already has serious problems meeting its requirements for oil, even at present prices and with the present sharply limited imports. Yet, unlike the industrialized countries, its consumption of energy should be expanding rapidly. Under these circumstances, the importance of developing the potential of solar energy is clear.

II. Solar Energy as Used in this Workshop

In one sense, all energy is based on the sun, except geothermal, nuclear, and a part of tidal energy. For example, oil, gas, and coal are the residue of solar photosynthetic energy stored by organisms millions of years ago. More commonly, solar energy has come to mean the energy coming in currently to the earth from the sun, energy which warms water and air and sustains all plants (and therefore all animals), feeds the rivers and streams, and causes the wind to blow.

In this workshop we will be prepared to discuss a number of solar energy forms:

1. Direct sunlight, which works in several ways to produce energy:
   (a) Unconcentrated heat can be collected for space or water heating, to distill water, or to dry food;
   (b) Unconcentrated heat can also vaporize gas to drive an engine (e.g., for pumping, grinding, or refrigerating);
   (c) Concentrated sunlight (collected with mirrors or magnifying glasses) can produce high heat for steam to turn a turbine; and
   (d) Sunlight can excite the atomic particles in a solar cell (such as a silicon strip), creating electric charges that can be collected as direct electrical current.

2. Wind is caused by the differences in amounts of sun that fall on different parts of the earth. It may be used to turn a shaft that can pump, grind, or turn a turbine to generate electricity.

3. Falling water is made possible by the heat of the sun, which evaporates water from the seas and other bodies of water, forming the clouds that carry water to elevations on land where it can feed the streams that again descent to the oceans. It may be used to turn a shaft that can grind grain or generate electricity.

4. Photosynthesis stores the sun's energy in plants which may be burned, as in the case of wood or charcoal, fed to animals or people, or converted into gas or alcohol through the action of bacteria.

III. The National Academy of Sciences

Mr. Chairman, the panelists of the National Academy of Sciences here to discuss these topics consist of six persons drawn from outside the staff of the Academy from throughout North America, all but one working in the private sector. None of them is paid by the Academy for this service, but rather all have responded out of a sense of professional interest and a desire to be of public service. Brief descriptions of their experience are available. As you can see, they represent the academic fields of physical chemistry, chemical engineering, social anthropology, mechanical engineering, and solid state physics. Their experience has covered village studies in East Africa, solar collectors, wind energy, bioconversion, photovoltaics, and a variety of work at the village level with small-scale renewable energy. They have written authoritatively in these fields and were selected by the Academy because they were held in high regard by their professional associates.

Finally, Mr. Chairman, may I make an observation based on my own work. Small-scale renewable technologies have been tried before in Africa. The failure rate has been high, as may be seen from the skeletons of windmills and the remains of biodigesters in various African nations. Yet, the technology of wind and methane generation is not inherently faulty, but quite the contrary, it has been proven in other parts of the world. My hypothesis is that the failure has been due to not involving the people of the village in planning the task to be energized, selecting the device, and installing, operating, and maintaining it. Instead, outside technicians came with pre-selected technology for a pre-selected task. They erected and operated a device, and when they left, it soon fell into disuse. The villagers had not been involved in this alien technology and so they rejected it. Hence, in our deliberations, let us insist on relating each technology we discuss to real life in real villages. If we follow this guideline, we may produce something of value.

APPENDIX E

COMMENTARY ON ENERGY FOR THE VILLAGES OF AFRICA
-- S. R. Nkonoki

Mr. Chairman and Fellow Seminar Participants, the document/report on Energy for the Villages of Africa in my view is an exciting as well as a highly commendable effort by the authors, Mr. James W. Howe and the staff of the Overseas Development Council. I say this because for too long scholars have been too preoccupied with enumerating causes of underdevelopment and not doing much or proposing concrete steps towards the development of the villages of Africa. It is in this context that I personally have found some consolation in the report and some proposals within this report on Energy for the Villages of Africa because we are now beginning to look seriously at the problems of the producers of wealth who have been neglected and exploited for too long. The electricity wire, "the grid," is passing over the heads and homes of villagers as we travel between Kidatu Hydroelectric Plant in Morogoro and Dar es Salaam or between Nyumba ya Mungu in Kilimanjaro and Dar es Salaam. To the villagers, the telephone lines and the electricity transmission line seem to be decorations running not only more-or-less parallel to our trunk roads and railways, but also parallel to the problems of the villagers. Even if they--the "villagers"--know that that line carries "electricity," they often joke to each other, "That is energy for the big people in town. What would you do with it if the power were eventually brought to your village house?"

Mr. Chairman, the peasants of Africa who live in the villages have for too long been fed with promises of this, that, or the other. As a "student" of physics and as a keen student of rural development, particularly in Tanzania, I personally appeal to those of us who can design and develop empirical technology, even if it be on a trial and error basis, let alone systematic technology, to do so for the development of the village people. Let us start to translate our political or even scientific visions, ideas, and goals into specific measures.

Mr. Chairman, in many Tanzanian villages, especially in the districts of Dodoma, Kongwa, Magu, Kwimba, Maswa, Shinyanga, Bariati, Nzega, Igunga, Singida, Kiomboi and Manyoni, housewives sometimes walk as many as three or even more kilometers each day in search of water for domestic consumption, especially during the dry season between July and September/October. A lot of hours are wasted in this way, which could be otherwise utilized for production. We should not rely heavily on a theoretical, elaborate, and long sociological research strategy whose preliminary phases may last two or three years in an effort "to help villagers identify tasks they want performed by non-human energy."[1]

Mr. Chairman, the villagers may be ignorant about mathematical equations and scientific theories, but they are not fools. They know that their ruling Party and their Government know their most pressing problems. It would be absurd to ask villagers if the task they want performed by non-human energy

---

[1]Overseas Development Council, Energy for the Villages, Conference Paper, 1977, p. v.

is to pump water from the nearest river or well to their village. By the same token, the villagers who are still grinding their grain, using the traditional method involving a big flat stone and a smaller hand-driven stone, are more likely to feel cheated should anyone set out to investigate if they would be happy or not to have engine machinery set up in their villages to help them mill their grain within their Kata[2] area. Mr. Chairman, what I am trying to say is that if we really want to help villagers to develop and utilize non-human energy projects, we should emphasize applied or adaptive research, rather than turn villagers into projects--mere sources of statistical, biographical, and other vital information which may be of an economic nature. To accumulate data on yields per acre by peasants in 1977 is not only to do the obvious, but to delay supplying energy to the villagers. Base-line studies are very important, especially when large industrial or agricultural projects are involved, but not so important when one is dealing with small-scale, decentralized energy projects. Tanzania has villages whose population is known almost to the nearest thousand. The average number of homesteads for each village is also known. There are, on the average, between 250 and 300 homesteads per village, following the recent country-wide villagization program which reached its peak in 1974/1975. Now Tanzania has 7,684 villages with 13,067,220[3] people living

---

[2]Kata is a Swahili word which means ward: a political as well as administrative area which has between four and six villages on the average. The population of a Kata ranges between 5,000 and 10,000 people.

[3]Tanzania, MIAKA 10 YA AZIMIO LA ARUSHA, Wizara ya Habari na Utangazaji, Dar es Salaam, 1977, pp. 97-98.

in them, out of an estimated national population of 15 million. Incidentally, Tanzania is to have a National Census in 1978 and a lot of up-to-date data will be available. The Party (CCM)[4] has repeatedly stated that the prime purpose of Ujamaa Village is to establish a foundation that will help Tanzanians to develop themselves and raise their living standard from the depths of ignorance and poverty to prosperity, democracy, and cooperation among villagers. Within these general goals of Tanzania's socialist rural development strategy, we find embraced the relevance of the focus of this conference--energy resources for the development of man, energy to free man from boredom and unnecessary toil so that man can have more time to do more creative and more productive tasks in order to improve his standard of living.

Mr. Chairman, we must avoid the mistake of isolating science and technology from ideology. Tanzania is building a socialist society based on self-reliance. Tanzania can attain self-reliance through the application of scientific research and the diffusion of technology in the rural areas as well as in towns. Once you discuss technology in the Third World you inevitably discuss aid. Tanzania will not achieve technological or industrial independence by relying on foreign aid in the form of scientific personnel funds, information systems, or machinery. No country has been able to become technologically independent through begging. What Tanzania needs is not lock-in technology that perpetuates dependence on foreign know-how. Tanzania needs to develop

---

[4]CCM means Chama Cha Mapinduzi: CCM is Tanzania's only Political Party, which was inaugurated on February 5, 1977, after the merger of TANU and Afro Shirazi Party.

and strengthen her own scientific manpower for research activities in industry and agriculture. The process of providing gas to rural Tanzania, the electrification of villages, and the provision of solar energy devices for drying crops, and fish such as Dagaa, meat, and so on, must enhance Tanzania's policy of self-reliance and hence development of men. If the provision of non-human energy to the villages promotes independence of foreign manufacturers for simple spare parts or maintenance staff, then such technology will be the further development of underdevelopment. For as President Nyerere has said, "Development brings freedom, provided it is development of people. But people cannot be developed; they can only develop themselves. For while it is possible for an outsider to build a man's house, an outsider cannot give the man pride and self-confidence in himself as a human being."[5] During his recent tour of the United States, President Nyerere said, "The whole idea of aid is wrong because it is both ineffective in dealing with the problem of poverty and humiliating to the receiver."[6]

I would therefore like to propose that, among the projects to be considered in promoting the provision of energy for villagers, there should be a strong training component for middle-level village technicians as well as top-level research scientists in the institutes, departments, or faculties of engineering, agriculture, physics, chemistry, and development studies of universities and other research organizations. Short-term and long-term study or research fellowships can be offered for postgraduate students to do further research in

---

[5]Nyerere, J. K. Freedom and Development, Oxford University Press, Nairobi, 1973, p. 60.

[6]See Sunday News, No. 1283, Dar es Salaam, p. 1.

solar energy devices and techniques, better preparation and utilization of wood-charcoal, development of better designs of gobar gas (methane) plants, small-scale hydroelectricity generation for small-scale industries and domestic consumption by using the waters of village streams and rivers, windmills, and so on. In this way, we shall be developing man as well as promoting technical independence and, eventually, economic independence.

A design problem which might be worth mentioning here concerning village-oriented technology relates to the ownership of devices or design of crop-drying appliances for individual homesteads or for a group of homesteads such as Ubalozi.[7] Or should we design large solar heat engines to cater to the needs of the whole village, which in Tanzania is a cooperative society anyway? In a capitalist society we may argue that the more the sizes of devices, the better for the consumer, since choice and variety are offered. But the average villager of Africa, at this stage of development, would not like to own and maintain an electricity-generating system on his own. Such a system will be better utilized and cheaper if it is maintained by the village as a whole for providing energy to a small village-based industry, to light the village dispensary, the village's primary school or welfare center, and so on.

Finally, Mr. Chairman, when we talk of providing developing gas appliances for villagers, we should never lose sight of the explosive dangers of fire. The village houses at present are more often than not thatched with grass, except for the houses of Wagogo, which are plastered with mud. The villagers have been using fire for hundreds of years in these grass-thatched

---

[7]Ubalozi is a Swahili word used in Tanzania's political language to mean ten homesteads which are under a CCM Cell Leader.

houses. It may be over-pessimism on my part to propose that we need to be careful of our design of gas appliances for the villagers because gas, even in modern houses, is extremely dangerous. The answer lies in educating people so that they can cope with technology. Perhaps to suggest that people should cope with technology is to subordinate human beings to technology, rather than vice versa. What I want to say is that people should be educated so that the results of science and technology can serve the cause of man, and in so doing, technology can bring prosperity and happiness to man.

Mr. Chairman, science and technology must be utilized for the liberation of man and not for the enslavement of man or promotion of fear and uncertainty about the future. If we who are gathered here can make concrete proposals and programs of research and development geared toward provision of non-human energy for the villages of Africa, we shall have made a small but important contribution for the liberation of man.

Thank you, Mr. Chairman and fellow participants, for according me this time to make my comments.

APPENDIX F

COMMENTARY ON ENERGY NEEDS IN TANZANIA
--Jeremy Elias Duwe

Ndugu Chairman, Fellow Participants, Ladies and Gentlemen, my colleague and I from the Prime Minister's Office regard ourselves more as observers than resource persons at this scientific seminar/workshop.

Because the Prime Minister's Office has, among its responsibilities, the role of coordinating development efforts and of following up the implementation of national development policies, and because this scientific seminar/workshop is a contribution towards Tanzania's development, we feel honored to have been invited to participate in this very important workshop and share in scientific deliberations.

The Prime Minister's Office has been asked to give a commentary on energy needs in Tanzania. Our first reaction to this request was that this topic should have been assigned to the National Scientific Research Council itself or to the Ministry of Water, Energy and Minerals. I hope that the address given by the Hon. Al Noor Kassum, M.P., Minister for Water, Energy and Minerals, at the opening session of this seminar/workshop this morning has covered the major aspects of this topic.

Having unfortunately missed the Minister's address, the response by Dr. James Howe, Chairman of the NAS Panel, Washington, and the other commentaries given this morning, I fear that I may bore you with the repetition of what has

already been elaborated by the previous speakers. Should it be so, ladies and gentlemen, you will have to excuse me.

Our commentary is going to be very brief. We should like to share your views on the following points:

1. That energy questions are central to any attempt at improving the quality of people's life everywhere in the world.

2. That the hard fact now is that the conventional fossil fuel resources which have been the main source of energy are fast becoming exhausted and are not easily replenished.

3. That most of the developing countries like Tanzania do not have enough financial and manpower resources to harness the limited conventional fossil fuel which they may have.

4. That on the other hand, the world, and especially tropical areas like Tanzania, has an abundance of solar energy to turn to.

5. That through sophisticated research, this abundant solar energy could be tapped for better human consumption.

6. That limited as they are in financial and manpower resources for such sophisticated research on solar energy, the poor nations such as Tanzania could utilize the research findings of the abler nations, with minor modifications to suit their requirements.

In diffusing these technical innovations to the developing nations, especially to the villagers, we should like to remind the technical innovators to bear in mind the right approaches for affecting change and development. People have to be involved so that they will be able to understand, appreciate, and adapt the innovations as part and parcel of their integral development.

For example, in this aspect of solar energy usage, it should be borne in mind that raw solar energy has been used in different forms in Tanzania from time immemorial. Just to mention a few common usages:

- It has been used for heating; people have warmed themselves with the sun's heat, acquiring what you scientists call Vitamin D without their knowing it.

- It has been used for heating, bathing, and washing water.

- It has been used for drying wet clothes and for domestic utensils in order to destroy pathogenic bacteria acclimatized to damp or wet surroundings.

- It has been used for the preservation and storage of foodstuffs such as meat, fish, green vegetables, beans, grains, maize, sorghum, cassava, etc.

- It has been used for fermenting local beer and other drinks.

- and so on, and so forth.

Of late, much effort has been made by domestic and international institutions such as the Ministries of Health, Agriculture, Water, Energy and Minerals, FAO, UNICEF, etc., to improve the utilization of solar energy in the country, especially in the rural areas.

These institutions have contributed in finances and in expertise to helping and advising villagers to build better food-preservation facilities through solar energy.

The efforts of institutions like these and others cannot be appreciated enough. Your research findings on the usage of solar energy and its practical application will surely help the whole of mankind in this critical shortage of fossil energy.

Your efforts need, therefore, to be appreciated and encouraged. In Bob Kennedy's words, "Come friends, it is never too late to build a better world." Ladies and gentlemen, thank you.

APPENDIX G

CHARACTERISTICS OF VILLAGE ORGANIZATION TO BE CONSIDERED IN THE USE OF RENEWABLE ENERGY DEVICES

-- Priscilla Reining

Villages in Tanzania

It is very suitable to consider the uses of renewable energy sources for villages in Tanzania because some of the oldest, as well as the newest, occur in Tanzania. Some of the villages in the northwestern part of Tanzania, in the West Lake Region, have been dated to 800 B.C. (I believe) and have been occupied more or less continuously since that time. The human skills and techniques to adapt to one environment and to maintain it in continuous production are quite extraordinary and we have much to learn, still, on the actual mechanisms and techniques of this type of mixed husbandry. Such longevity also argues for the stability of village populations and the suitability of adding, in this generation, to their viability in modern terms through the use of non-human energy resources. Villages such as these are also inhabited under conditions of high density--approximately 1,000 persons per square mile--which means that new installations can serve more people more easily.

The new villages--the ones being registered under the 1975 act which have undergone resettlement to bring people together--are especially important to consider, since new opportunities are arising for serving a larger number of people in a more compact (and presumably efficient) manner than might have

been possible under other forms of settlement. I would also like to reiterate the clear relationship between decentralization and the purpose of this workshop in evaluating renewable energy sources for use on a small scale and in remote areas.

In terms of social organization, villages can be viewed as an entire community--with community-level needs and patterns of ownership--and also as a unit with sub-groups. In many, if not all, villages in Tanzania, there will be groups of people who are related to each other through ties of common descent--who recognize their common descent through males (or females, in the south) in lineage membership. Other associations within and between villages can also be assumed to exist--craft members, religious groups and so forth--and may also be the basis of acquisition of new devices. Of considerable importance, however, is the domestic group--the household and family--because they form a basic unit of consumption, distribution, and, usually, production. The scale of villages, lineages, and households is quite relevant to our discussions--hundreds, less than a hundred, and five to twenty.

The Social Aspects of "Hardware"

Harnessing the available sources of renewable energy will necessarily involve some form of equipment, or hardware, however simple or complex and however expensive or inexpensive. How the property is to be handled needs to be considered almost as carefully as the technical and economic aspects because it provides a clue not only to acquisition but to maintenance and disposal. We can summarize these considerations:

	Villages	Households - Families
1. Acquisition:	Does the village buy as a whole?	Can a family buy or build?
2. Rights:	Does every villager have equal rights?	Does a family retain rights?
3. Use:	Does every villager have equal use?	Which persons in the family can use?
4. Disposition:	If the village should be moved, what will become of equipment?	What happens when the household head dies?

Seasonality

It is well known that in the northern part of Tanzania the equatorial climate of two rainy and two dry seasons prevails, with a corresponding division into seasons of shorter duration than prevails to the south. In the southern portions of the country one long dry season is interrupted by one rainy season. In addition to the seasonal variation, some parts of the country (northeast, lake, and southern) have much wetter climates than the generally arid middle part of the country. A combination of means of harvesting renewable energy sources will probably be necessary to accommodate these basic facts.

APPENDIX H

SOLAR ENERGY UTILIZATION AND THE DEVELOPMENT OF THE NEW CAPITAL IN DODOMA

--Douglas H. Lee

The Capital Development Authority is pleased to be a participant at this Solar Energy Utilization Seminar and Workshop. From the information that has been communicated at this meeting, and the indication of the program over the next few days, this workshop should indeed be most helpful to us in developing and implementing our plans for the new capital in Dodoma.

As most of you are aware, it is the role of the Capital Development Authority--with the Ministry of Capital Development--to implement the transfer of the national capital from Dar es Salaam to Dodoma, following the decision taken by the Party and the Government to do so in 1973. At that time, Dodoma was a city of 35,000 people. At the present time, it has an estimated population of 60,000, and by 1990, when the transfer will be completed, the planned population of the new capital city will be in the neighborhood of 350,000 people.

It is fair to say that this project represents one of the largest and most significant undertaken by the people of Tanzania since independence--a project of considerable social, economic, and political importance. It has required careful planning to mobilize and utilize, both efficiently and effectively, the wide array of resources that are necessary for the achievement of a project of this magnitude and complexity.

Not the least of these resources is energy--the energy that will be required to build the Capital, the energy to operate it, and the energy to supply the needs of the people who will live in the capital city and the region.

In the development of the master plan for the capital and the strategies for energy supply, distribution, and utilization, two basic objectives were emphasized:

1. Energy utilization should be economical, efficient, and capable of achievement within Tanzania.

2. Methods of energy utilization should follow high standards of conservation and pollution control.

Considering the first of these:

1. It should not be surprising that great importance has been placed on the design of effective and efficient means to provide energy to the capital; what with the so-called "energy crisis" that obtains throughout the world today, no nation--least of all an energy-importing nation like Tanzania--can afford to ignore these considerations. Energy- and resource-saving have been among the most important considerations of the master plan--both in the planning and layout of the new capital city itself and of the materials, equipment, and systems that are proposed for its implementation.

The manifestation of these may be seen in the layout of the neighborhoods and communities, which give precedence to the movement of the people on food and by bicycle--and places less emphasis on catering to the needs of the automobile.

It may also be seen in the importance placed on the design and selection of a public transportation system--a bus way or bus route system--which is likely to serve as an example to many quarters of the world.

Also, in developing guidelines for the design and the construction of buildings, the concept of energy conservation was applied in a number of ways. Structural materials with low energy content, such as masonry, were encouraged for use; local materials, requiring minimum of transport to the site, were recommended. Low-rise buildings with low-rise equipment both for construction and operating are generally called for--to minimize use of energy-consuming machinery such as escalators and elevators.

To ensure human comfort in buildings, building-design regulations stressed orientation, fenestration, and air circulation to obviate the need for mechanical air conditioning and to maximize natural cooling and ventilation.

In relation to the utilization of solar energy, it is interesting to note that the favored basic materials for housing in the capital--making brick and tile--are materials with high capacity for heat storage, which, in the Dodoma climate, will help to keep the buildings cool during the daytime and warm during cool nights.

And finally, it will be of interest to the members of this workshop to know that in our most recent briefs to agent architects designing houses for the new capital, the Department of Urban Design and Architecture has incorporated recommendations that encourage energy and resource conservation, and design innovations which utilize alternate sources of energy including the sun.

2. Energy utilization, conservation, and control: no one disputes the need for the development of the new capital, to adapt procedures for energy utilization which follow principles of conservation and which do not pollute the environment nor contribute to the destruction of the landscape. The effects of neglect of these areas are clearly identified in the background papers to this workshop.

In the Dodoma Capital District and the surrounding Dodoma Region, a serious concern has been shown for the harvesting of wood for fuel for heating and cooking and other processes. It is recognized that the uncontrolled cutting of trees for wood fuel and charcoal can have serious consequences for the capital and region in the erosion of the land, the breakdown of the soil structure, and the removal of an amenity which helps to make the capital city a pleasant and attractive place to live.

In the studies for the development of the Master Plan, this problem was one of the first to be identified, and as a result, a program of reforestation has been an integral part of the development program.

In the capital city, the CDA has planted some 375,000 tree seedlings at its nursery for planting within the capital. Three thousand nine hundred trees have already been planted in the Mlimwa area. These trees will help stop the erosion of the land, rebuild the structure and capacity of the soil to sustain growth, and help to create an attractive and healthy environment. With selective cutting, the trees will add to the fuel supply of the new capital.

In the Dodoma Region, a similar program of afforestation is also being carried out by the Regional Government Authorities and for the same reasons. By 1980/82, it is planned that 750 km^2 of land shall be under forest plantation, both in village woodlots and larger reserves. These trees will become available for use as a fuel in a 7- to 19-year period.

Given the present rate of cutting, it is recognized that there will be a gap of 5 to 6 years between the end of the existing wood resources and the maturity of the new trees. In the light of this projection, it would be

highly desirable if the source of this energy supplement were to come from the sun. We at CDA are therefore looking forward to the activities and findings of this workshop.

APPENDIX I.A

PRESENT STATUS OF TECHNOLOGY FOR SOLAR-TERMAL APPLICATIONS
--J. Richard Williams

Energy from the sun can be converted into usable forms of energy by means of various conversion technologies, most of which may be grouped into these principal categories:

1. Direct thermal applications, involving collection of sunlight through thermal collectors for heating and cooling of buildings, heating water, distillation, or providing industrial and agricultural process heat;

2. Solar electric applications in which energy from the sun is transformed into electricity via solar thermal electric, photovoltaic, wind, or ocean-thermal conversion systems; and

3. Fuels from biomass, involving the production of fuels such as wood, methane, alcohols, hydrogen, or other energy-intensive products from organic materials (biomass).

All of these technologies exist and have been demonstrated; however, until recent years development efforts have been limited in scope, due primarily to the high cost of utilizing solar energy and the abundance of cheap alternative fuel sources (mainly oil and gas). The recent rapid escalation in the costs of fossil fuels, the rising awareness regarding environmental pollution issues, and the finite size of fossil resources

have changed the picture. Alternative energy sources have to be developed to supplement and eventually replace fossil resources.

Flat Plate Solar Collectors

Flat plate solar energy collectors are used for providing low-grade heat. A blackened surface is covered by one or more transparent cover plates of glass or plastic, and the sides and bottom of the box are insulated, as shown conceptually in Figure 1. Sunlight is transmitted through the transparent covers and absorbed by the blackened surface beneath. The covers tend to be opaque to infrared radiation from the plate and also retard convective heat transfer from the plate, so the black plate heats up and in turn heats a fluid flowing under, through, or over the plate. Water is most commonly used, since the temperatures involved are usually below the boiling point of water. The hot water may be used directly or heat may be extracted from the hot water for other uses. Collectors of this general type can also be used for heating air.

In order to design and construct solar collectors, detailed properties of materials and characteristics of the components must be available in order to predict the performance and durability of the collector. For commonly available materials the required data are often available in standard engineering handbooks; however, when new materials are involved, additional property measurements may be necessary.

Needed property data can generally be classified into three categories: thermophysical properties, physical properties, and environmental properties. Thermophysical properties include thermal conductivity, heat capacity, and the radiant heat transfer characteristics. Physical properties include

density, tensile strength, melting point, modulus of elasticity, and other common properties. Environmental properties include resistance to ultraviolet degradation, moisture penetration, degradability due to pollutants in the atmosphere, and other similar characteristics.

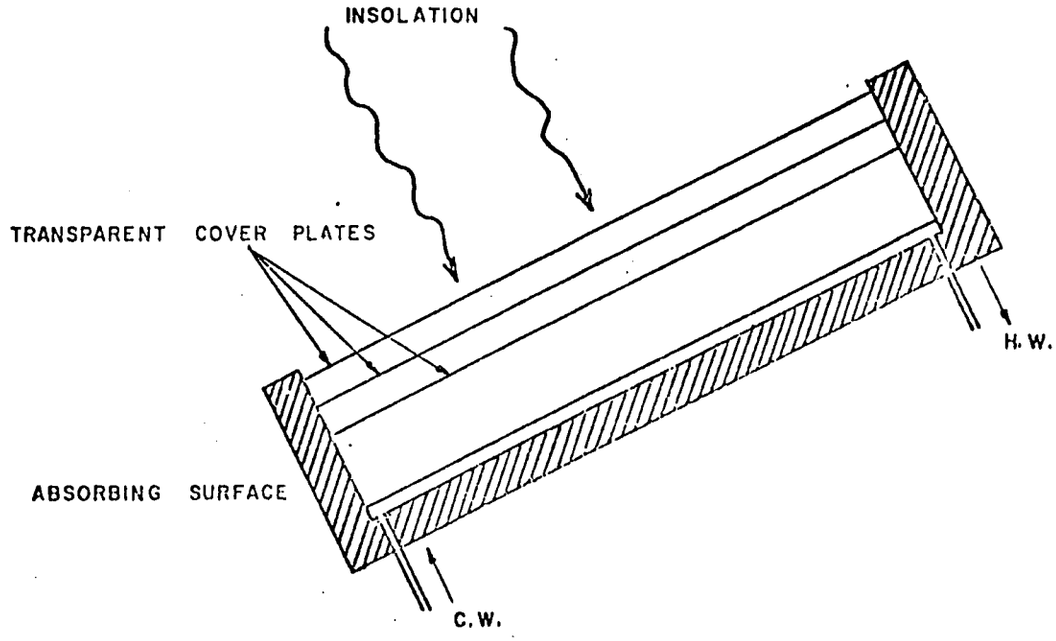

Figure 1. Flat Plate Solar Collector Concept

The most important properties of collector absorber plate materials are thermal conductivity, tensile and compressive strength, and corrosion resistance. For this reason, copper is generaly preferred because of its high thermal conductivity and resistance to corrosion. Collectors are also being

constructed using aluminum and steel absorber plates with a corrosion-inhibited heat transfer fluid.

Aluminum is susceptible to many forms of corrosion, which can ultimately result in perforation and leakage of the heat transfer fluid. Most potable waters contain chloride ions and heavy metal ions such as copper and iron, which cause pitting in the aluminum channels. This is one reason why one cannot mix copper plumbing and aluminum collectors, since the copper plumbing will provide a ready source of copper ions from corrosion of the piping and chlorides may be introduced from the soldering fluxes. Galvanic effects can also become important in multi-metal systems, to electrical isolation must be provided between dissimilar metals. In addition, corrosion can be produced by the simple erosion process resulting from high flow rates and turbulence in the fluid passages. Partial blockages of fluid passages can cause localized high velocities resulting in this type of degradation.

Because of the cost and corrosion characteristics of metals, efforts have been undertaken to utilize plastics for solar collectors because of their inherent resistance to corrosion by heat transfer fluids and resistance to environmental degradation. The use of plastics also offers considerable promise for weight reduction. The most versatile family of plastics available for the fabrication of solar collectors appears to be the silicones. These have very good weathering characteristics. Silicone resins have been used for coating collector covers and as a binder for high-temperature paints used for the absorbing surfaces. Many collectors have also utilized silicone adhesives and sealants in their construction because of their resistance to heat, low temperatures, and weathering. Also, the silicone sealants

accommodate thermal expansion processes in collectors.

Until recently, absorber plates for flat plate solar collectors were usually constructed with tubes soldered or welded onto a metal plate, which was then blackened. Some of the earlier solar water heaters actually had tubes fastened to the plate without soldering, resulting in poor heat transfer and poor thermal performance. The standard procedure for fabricating an absorber plate was to take a sheet of copper or aluminum and solder tubes to it; the sun falling on the plate would heat the metal plate, which would transfer heat to water flowing through the tubing. An exception to this is the trickle collector, which uses an aluminum or galvanized iron absorber plate with water or oil flowing on the top of the blackened metal surface. This type of collector is not as efficient as most conventional flat plate collectors when the fluid temperature is considerably higher than the ambient temperature.

One of the primary components which affects the performance and durability of flat plate solar collectors is the cover plate or plates through which the solar energy must enter. The functions of the cover plate are 1) to transmit as much solar energy as possible to the absorber plate; 2) to minimize heat loss from the absorber plate to the ambient; 3) to shield the absorber plate from direct exposure to weathering; and 4) to receive as much of the solar energy as possible for the longest period of time each day.

The most critical factors for the cover plate materials are strength, durability, non-degradability and solar energy transmission. Tempered glass is the most common cover material for collectors because of its proven durability and because it is not affected by the ultraviolet radiation from

the sun. Experience has shown that, unless the glass is tempered, the day-by-day thermal cycling of the cover plate tends to cause breakage. Tempered glass, properly mounted onto a flat plate solar collector, is highly resistant to breakage both from thermal cycling and from natural events. Glass is also effective in reducing radiative heat losses because it is opaque to the long wavelength radiation reemitted by the hot absorber plate.

Plastic materials may also be used for cover plates, such as the acrylic and polycarbonate plastics and plastic films of Tedlar and Mylar and commercial plastics such as Lexan. Plastic materials tend to have limited lifetimes because of the effect of ultraviolet light in reducing the transmissivity of the plastic. Also, they usually are partially transmitting to long wavelength radiation and are therefore less effective in reducing radiative heat losses from the absorber plate. Some plastics also are unable to withstand the maximum equilibrium temperatures that are encountered in flat plate collectors, especially when the collector is dry. The main advantages of plastic materials are greater resistance to breakage, reduction in weight, and, in some cases, a reduction in cost.

Most glass and plastic materials of interest have refractive indices of about 1.5; unless special coating or surface treatments are applied this results in approximately 8 percent of the normal incidence solar radiation reflecting from the glass away from the absorber plate, and a greater fraction is reflected at higher incidence angles. This means that the maximum transmittance is 92 percent for a single perfectly clear, non-absorptive sheet of glazing material. In multi-glazed panels, the reduction in transmission is about 8 percent more for each additional sheet of glazing. In addition, there

is a transmission reduction due to the absorption of sunlight within the glazing material.

The transmissivity of glass depends on the iron content. A normal sheet of window glass will look green when viewed through the edge because of the iron oxide within the glass. Water-white crystal glass has the lowest iron content and therefore the highest transmission of solar radiation. Water-white crystal is available either in annealed (cutable) form or tempered. Tempered glass has about 5 times the impact and thermal shock resistance of ordinary annealed glass.

In selecting a glass for collector cover plates, the mechanical strength must be adequate to resist breakage from the maximum expected wind loads, snow loads, and normally expected impacts. The mechanical strength is proportional to the square of the thickness of the glass, so cover plates for solar collectors are normally at least one-third cm thick.

Thermal shock to glass cover plates results from several processes. First is the day-to-day heating and cooling from the increase in solar radiation intensity on the collector during the morning hours and its subsequent decrease in the afternoon. In addition, in partly cloudy weather, glass temperatures can rise and fall by 50 degrees or more in a matter of minutes, as clouds pass overhead. The central area of the collector is subjected to greater heating than the edges of the glass, since normally the edges are enclosed in flashing and are not exposed at all to direct sunlight. The thermal stress in the glass at the edges may be estimated at 60,000 kg/m^2 ^oC of temperature difference between the heated center and the cooler edge of the glass plate. Thicker glass plates are more subject to thermal shock than

thinner plates. Additional stress can occur when a single collector is partially shaded. In this case, part of the glass plate is subjected to high temperatures, while the shaded area is not. These various processes can easily result in breakage of non-annealed glass and accounts for the use of tempered glass in solar collectors.

The rigidity of a glass plate is proportional to the cube of its thickness, and the resistance to flexure under mechanical stress is especially important when the glass is assembled into double-glazed units with a seal between. Some flexure may be desirable to accommodate the expansion of the air within the gap when the collector is heated.

At the present time it is doubtful that infrared reflective films will find much applicability for flat plate solar collectors because of the development of effective and economical selective coatings which themselves reduce infrared emission from the absorber plate. With a highly selective coating on the absorber, there is little infrared to reflect back. Also, infrared reflective coatings developed to date incur a penalty of reduced solar transmittance.

Spectrally selective coatings applied to solar collector absorber plates enhance the absorption of sunlight while reducing the emission of infrared radiation, thus causing a higher equilibrium temperature to be reached. At a given operating temperature, the collector efficiency is increased because less heat is lost by reradiation from the absorber plate.

Desirable properties for practical solar selective coatings are ease of application, reasonably low cost, and long-term durability under solar radiation and environmental conditions found within the solar collectors. One

method of producing a solar selective coating on a copper plate is to coat the collector surface with black copper oxide by oxidation of the surface of the copper absorber plate or by thermal decomposition of copper nitrate on the collector surface.

Although optically black nickel seems to be a highly desirable coating for solar collectors, its major drawback is attack by moisture. Solar collectors utilizing black nickel as the selective coating must be protected so as to prevent any moisture from reaching the absorber plate, thereby destroying the selective coating. Fortunately, a similar type of electroplated coating has been developed called black chrome, which has selective characteristics equal to that of black nickel but is extremely resistant to environmental degradation and capable of withstanding temperatures to 370° C or higher. Since black chrome has been used as a commercially decorative finish for many years, the technology for plating black chrome is well in hand and a number of organizations have made black chrome available for commercially manufactured solar collectors. At the present time, it appears that black chrome is an excellent choice of selective coating for flat plate solar collectors because of its highly desirable optical characteristics (absorptivity = .95; emissivity = .07), its durability and resistance to attack by moisture or high temperature, and its moderate cost ($12 per m^2 as of September 1977). Thus, it appears that at present the best coating for higher temperature applications (80° C - 300° C), such as systems which involves air conditioning, is black chrome. For lower temperature applications (less than 80° C), black ceramic enamel may be preferred in severe environments because of its selectivity and non-degradability, whereas less expensive organic enamels

with higher absorptivity values are preferred under favorable environmental conditions.

Figure 2 illustrates a conventional flat plate collector design with two transparent sheets of glass mounted over the blackened metal absorber plate. The insulation beneath the absorber plate considerably reduces heat losses from the rear of the collector. The glass is sealed so as to prevent moisture from entering the collector; however, a small gap at the edges of the glass covers accommodates thermal expansion. Water, or another heat transfer liquid, circulates through tubes in the plate.

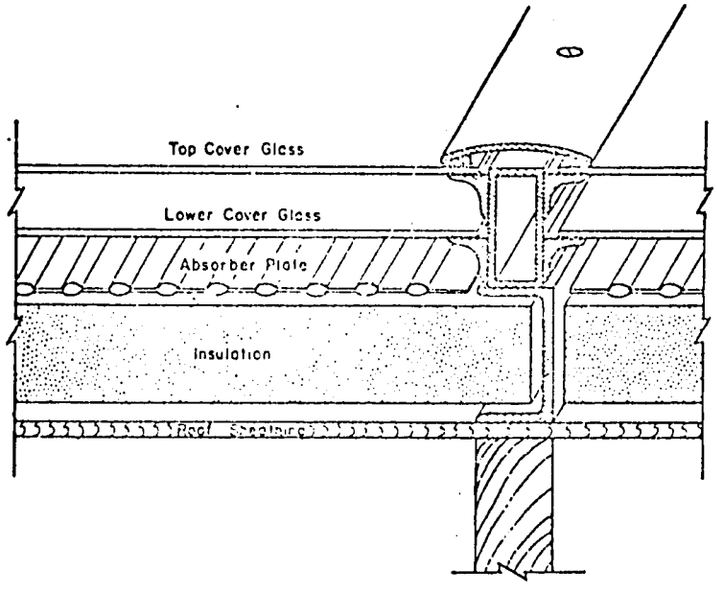

Figure 2. Cross Section of Typical Conventional Flat Plate Solar Collector Installation

Another type of flat plate collector currently being manufactured is the trickle collector (Figure 3), in which water or another fluid is allowed to trickle over the vertical absorber plate surface, thereby becoming heated. These types of collectors can be manufactured more cheaply than conventional flat plate collectors and are nearly as efficient as long as the difference in temperature between the fluid and ambient is less than 40° C. However, for larger temperature differences, the efficiency of the trickle collector drops off rapidly. Trickle collectors cannot be used for solar absorption air conditioning because of the high fluid temperature required by the absorption equipment.

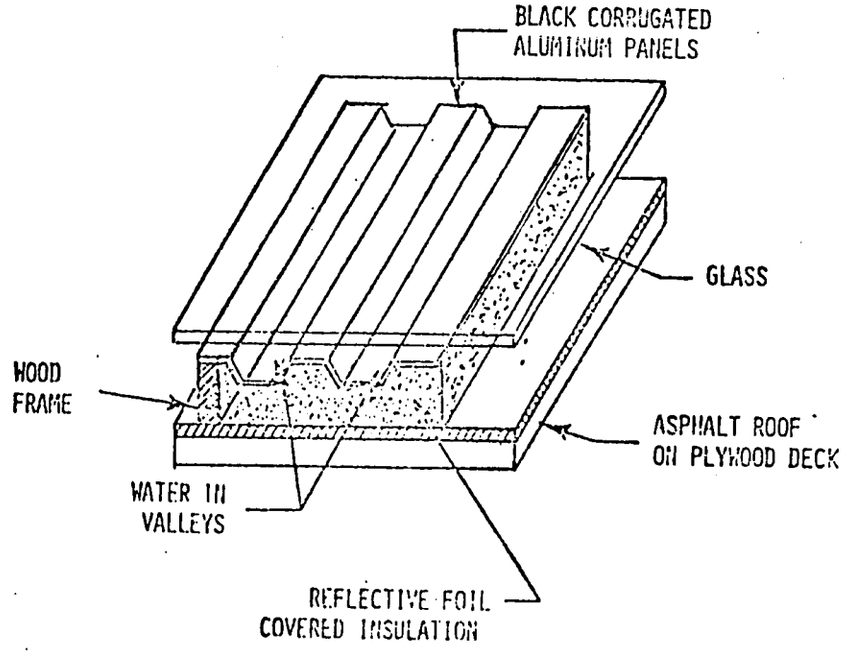

Figure 3. Typical Trickle-Type Flat Plate Solar Collector Installation

Collector Performance Evaluation

Theoretical analyses of the performance and operating characteristics of flat plate collectors have been carried out by numerous researchers since the original Hottel and Woertz paper in 1942. It has been shown that the instantaneous performance of a flat plate solar collector operating under quasi-steady conditions can be described by

$$\frac{q_u}{A_a} = I(\tau\alpha)_e - U_L\ (\overline{T}_p - T_a) \tag{1}$$

where q_u is the useful heat collected (Watts)

A_a is the aperture area (m^2)

I is the solar radiation intensity on the collector (W/m^2)

τ is the overall transmissivity of the cover plates

α is the hemispherical absorptivity of the absorber plate

$(\tau\alpha)_e$ is the effective $\tau\alpha$ product

U_L is the loss coefficient (Watts/^oC)

$\overline{T}_p$ is the average collector plate temperature

T_a is the ambient temperature

One may introduce F_R where

$$F_R = \frac{\text{(actual useful energy collected)}}{\text{(useful energy collected if the entire collector surface were at the temperature of the fluid entering the collector)}}$$

Introducing this factor into equation (1) results in a new performance equation

$$\frac{q_u}{A_a} = F_R\ [I(\tau\alpha)_e - U_L\ (T_{f,i} - T_a)] \tag{2}$$

$T_{f,i}$ is the fluid inlet temperature

If an instantaneous solar collector efficiency is defined as

$$n = \frac{\text{(actual useful energy collected)}}{\text{(solar energy incident upon or intercepted by the collector)}}$$

or

$$n = \frac{q_u/A_a}{I} \qquad (3)$$

then the instantaneous efficiency of the flat plate collecter is given by:

$$\eta = F_R\,(\tau\alpha)_e - F_R\,U_L\,\frac{(T_{f,i} - T_a)}{I} \qquad (4)$$

This equation indicates that if the efficiency is plotted against $T_{f,i} - T_a$ a straight line will result where the slope is $F_R\,U_L$ and the y intercept is $F_R(\tau\alpha)_e$. This is the way actual performance data for solar collectors is presented, with the efficiency η plotted against $\frac{T_{f,i} - T_a}{I}$. is the efficiency the collector would have if the fluid inlet temperature was equal to the ambient temperature.

In general, the energy conversion performance of flat plate collectors can be improved by two methods.

1. Increasing the transmission of energy through the collector to the working fluid. This may be done by improving:

(a) the transmittance (in the approximately 0.4 - 1.9μm spectral range) of the transparent (glass or plastic) cover plates.

(b) the absorptivity of the absorber plate to the incident solar radiation. Absorptivities approaching 1.0 are obtained by appropriate black coatings.

(c) the heat transfer coefficients from the absorbing surface to the fluid. These depend on the thermal conduction resistance through the solid (thermal conductivity, plate thickness) and on the nature of convection in the flow channels, such as whether the flow is turbulent or laminar, and surface roughness.

2. Decreasing the thermal losses from the collector to the ambient. This is accomplished by reducing:

(a) Conductive losses: Those that occur through the back and sides of the collector can be reduced to a negligible amount by using a sufficiently thick layer of thermal insulation. The main problem is in the front where heat is conducted from the absorber plate through the air layer(s) between the plate and the transparent covers and on out to the ambient air. The increase in the thickness of the air gaps reduces the loss up to a certain limit, where further increases allow significant natural convection. Natural convection transfers heat at higher rates than conduction; this leads to higher, rather than lower, heat losses. Alternatively, several transparent panes could be used to create a number of narrow air gaps. This, however, reduces the transmission of solar energy to the absorber. The single-pane collector is the most efficient when the absorber temperature is not much higher than that of the outer window pane (transmission dominating over heat losses), but becomes rapidly less efficient when this temperature difference increases. Therefore, high temperature collectors require multiple panes in the window.

(b) Convective losses: These separate into internal convective losses from the absorber plate to the outer window pane, and external losses from the outer window pane to the ambient air. In the absence of wind, the external convective losses are due to natural convection. Even low winds, however, dominate convection when they occur. While means could and should be introduced to reduce external convective losses, it would be most useful to reduce the internal losses and thus also to reduce the temperature of the outer window pane. While the available information on natural convection in vertical air gaps is not conclusive, the convection is very small and comparable in its effect to conduction for small values of the Grashof (or Rayleigh) Number, and it becomes significantly greater for large values of these numbers. The nature of the convection also depends on the specific boundary conditions and the geometrical aspects of the enclosure. Besides the maintenance of narrow air gaps to decrease convection, a cellular structure can be placed between the absorber and the cover plate.

Besides the cost, the major problems associated with the incorporation of cellular structures are that they reflect a part of the solar radiation, thus preventing it from reaching the absorber plate, and that they increase the thermal conductivity of the space between the absorber and the cover plate.

Finally, the evacuation of the space between the absorber and the window pane has been tested. Evacuation of the air would eliminate the internal convection and greatly reduce conductive losses, but probably at prohibitive cost.

(c) Radiative losses: The radiative losses from the absorber to the ambient can be reduced by a spectrally-selective coating on the absorber plate. These coatings have a high absorptivity in the solar spectrum but have a substantially lower emissivity, usually of the order of one-tenth, in the infrared spectrum in which most absorber plates radiate. The selective absorbers thus decrease heat losses and increase collector efficiency. Recent tests at the NASA Lewis Research Center have shown black chrome to be a high performance, durable selective coating, which can be applied to solar collector plates at a cost of about $\$7.50/m^2$.

Solar Refrigeration

In the basic absorption refrigeration system the working fluid for the system is a solution of refrigerant and absorbent, which have a strong chemical affinity for each other. As shown in Figure 4, heat is added to this solution in the generator; as a result, refrigerant is vaporized and a mixture weak in refrigerant concentration is left behind. Heat is subsequently removed from the vapor and the vapor is liquified in the condenser. The liquid refrigerant is then available for expansion from the high pressure portion of the system (generator and condenser) into the low pressure evaporator wherein vaporization of the refrigerant and cooling is achieved. The vaporized refrigerant is next recombined in the absorber with the absorbent mixture from which it was initially obtained. Since this recombination reaction is exothermic, heat is removed from the absorber to maintain its temperature low enough to assure a high chemical affinity between the refrigerant and the solution. The absorber solution, now rich in refrigerant, can be pumped back into the

generator so the cycle can continue. Since refrigerant-weak solution must be circulated continuously from the high temperature generator to the low temperature absorber, and strong solution must circulate in the opposite direction, the recouperator shown is required to minimize the heat losses associated with fluid transfer between these two components.

The thermodynamic properties of absorption system working fluids are such that the absorber temperature (determined by the heat rejection temperature) and the refrigerant concentration in the absorber determine the affinity of the solution for the refrigerant and hence the pressure in the absorber. The absorber pressure is equal to the evaporator pressure, and therefore, the temperature of the evaporator wherein refrigerant vaporization occurs is determined. Similarly, the temperature of the condenser determines its pressure and hence the pressure in the generator. This pressure and the concentration of refrigerant in the generator determine the temperature at which it must be maintained to assure continued vaporization of the refrigerant. The desired evaporator temperature and the available heat rejection temperature determine the refrigerant concentration required in the absorber. Since the refrigerant concentration in the generator must be less than that in the absorber, and since the heat rejection temperature determines the condenser temperature, one is constrained to generator temperatures greater than a minimum value at each heat rejection temperature.

It is the function of the absorber to (1) maintain the desired pressure in the low pressure side, and (2) dissolve the vapor in the absorbent so that the refrigerant can be returned to the high pressure side

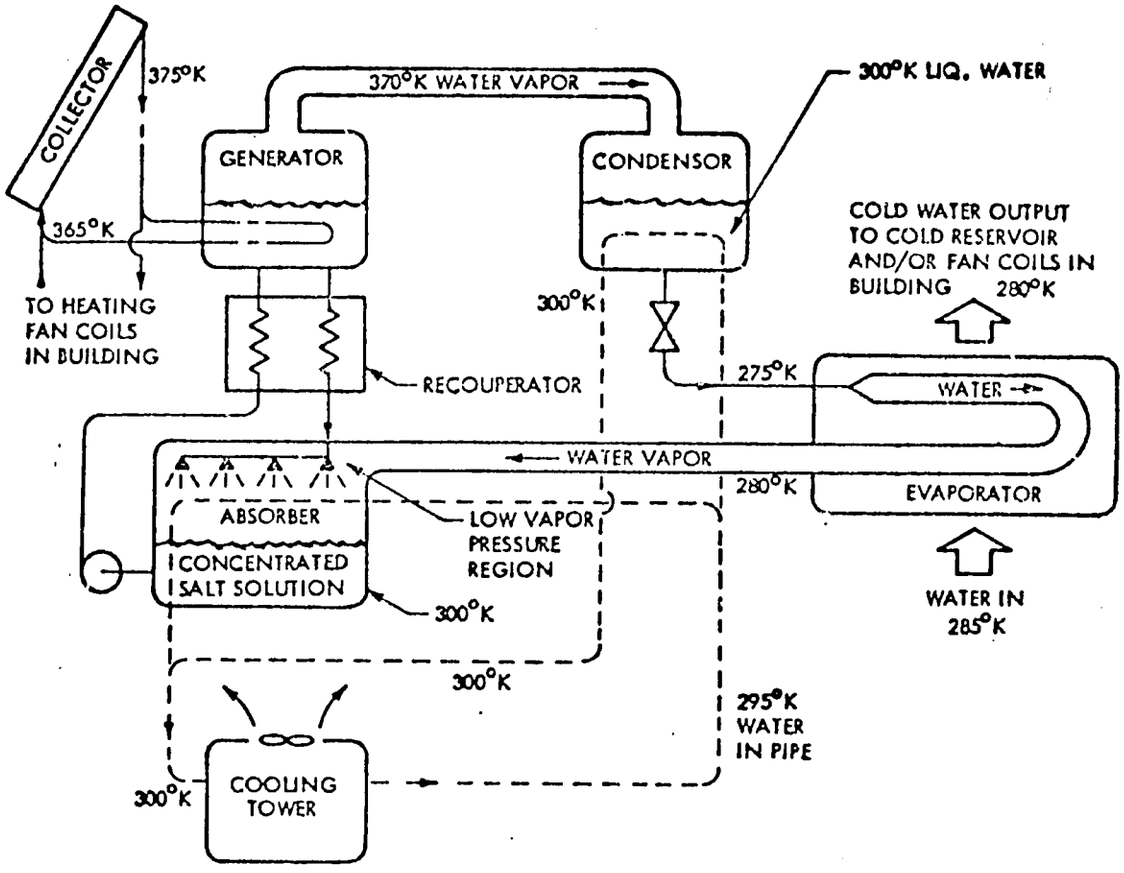

FIGURE 4 Schematic Diagram of Absorption Cycle
Hot Water Fired Chiller Unit

without expending a large amount of mechanical work to compress the vapor. Both functions are accomplished because the absorbent has a high affinity for the refrigerant vapor, i.e., the absorbent has a strong tendency to absorb or dissolve the vapor. The pressure maintained is that fixed by the nature of the absorbent, its concentration, and its temperature. These factors are selected by the designer in order to obtain the desired results. In the absorber, the absorbent and the refrigerant vapor are brought into intimate contact to facilitate the dissolving of the vapor. The absorption process is exothermic and the heat released is known as the heat of absorption. This quantity of heat is equal to the sum of the heat of condensation of the vapor and the heat of dilution of the absorbent. Thus, in order for the absorber to continue its function, the heat of absorption must be continuously removed. Furthermore, this heat must be released at a temperature high enough so that the heat can flow to an available heat sink. Generally, the same heat sink will be available for both the condenser and the absorber.

The compression step occurs when the refrigerant vapor is dissolved in the absorbent. For example, if 0.9 kg of a 10 percent aqueous-ammonia solution at 49° C (volume of 960 cm^3) is allowed to absorb 0.45 kg of saturated ammonia vapor at 3.3° C (volume of 117,000 cm^3), the resulting 1.35 kg of 40 percent solution cooled to 49° C will have a volume of 1,610 cm^3. The increase of liquid volume is thus 650 cm^3, and the compression ratio is therefore 117,000/650 = 180. This very high compression ratio demonstrates the effectiveness of the absorber as a compressor. The effect is the result of the attraction between the absorbent and refrigerant molecules.

The function of the generator is to separate the refrigerant from the absorbent. This is accomplished by vaporizing the refrigerant so that the physical separation of the refrigerant vapor from the absorbent liquid is relatively easy. This process requires the addition of heat, most of which is used to vaporize the refrigerant. The absorbent in concentrated form flows back to the absorber through a flow control, and the refrigerant vapor flows through an unrestricted passage to the condenser.

Heat is put into the absorption cycle in two places; i.e., into the generator and into the evaporator. Energy must also be supplied for the solution pump; this is generally very small in comparison to the other energy requirements, and the heat equivalent of the energy used for circulating the solution is simply added to the heat applied to the generator. Heat is dissipated from both the condenser and the absorber.

Solar Stills

A simple solar still consists of a flat evaporating tray resting horizontally on an insulating support and covered tightly eigher with a single inclined glass or plastic pane forming an L-shape (Figure 5) or with 2 inclined glass or plastic panes forming a roof shape.

Solar radiation penetrating through the glass cover warms the brine in the evaporating tray, producing an excess of water vapor inside the still, and the enclosed air becomes nearly saturated. Thus, vapor condenses at the inner surface of the glass cover, which is at a relatively lower temperature than the enclosed air. The condensed water slides down to the collecting channels in thin films. The theory of solar stills has been developed in a system of

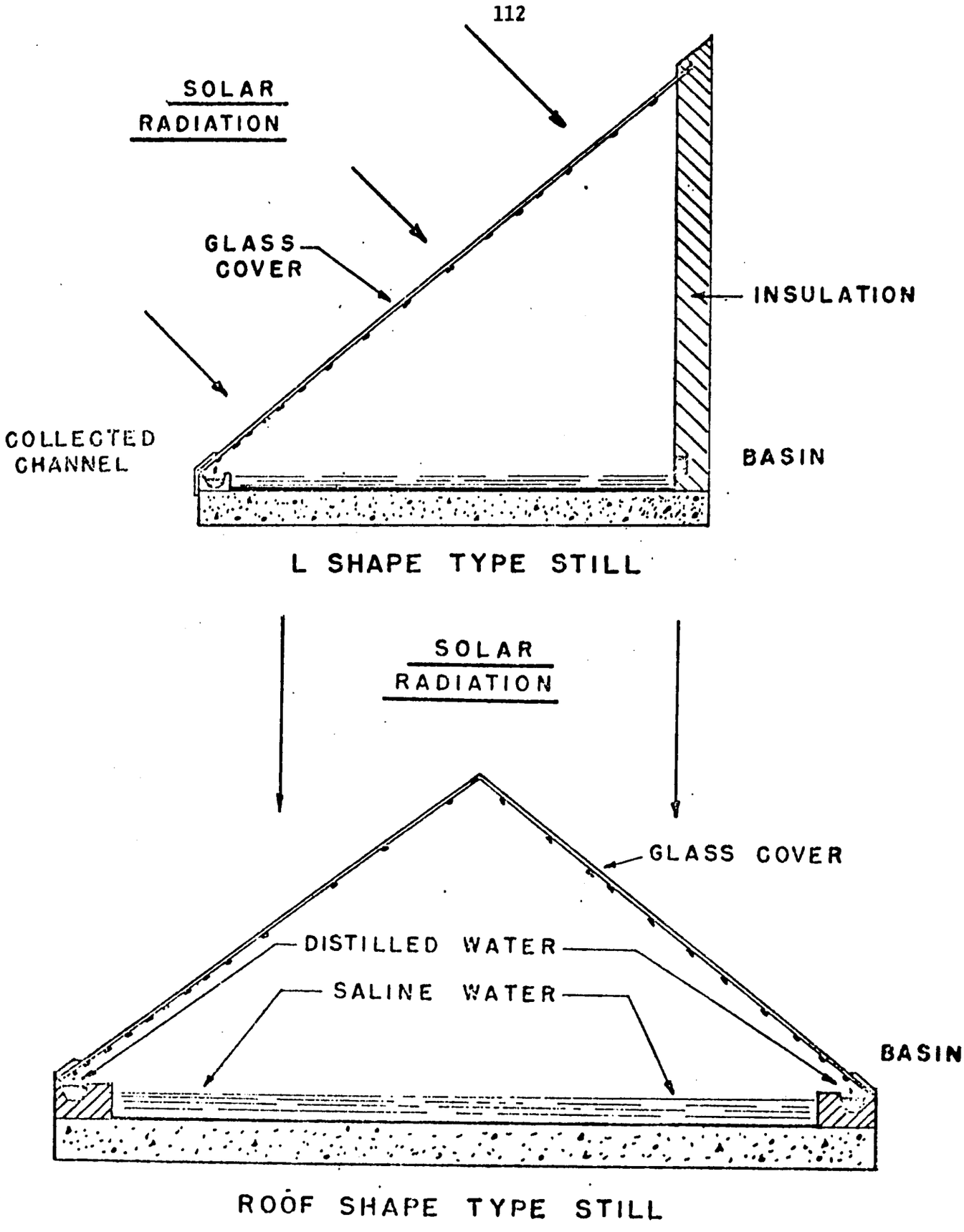

FIGURE 5 L-Shape Solar Still (upper) and Roof-Shaped Solar Still (lower).

equations based on heat and mass transfer laws. Figure 6 illustrates a large solar still system which could be used to supply a village.

The efficiency of a still is defined as the ratio of the productivity to the theoretical obtainable amount if all the incident solar radiation were used in the conversion process. The theoretical energy requirement to demineralize one gram of saline water is about 2,500 Joules. This is the sum of heat of vaporization and the heat required to warm one gram of water to the evaporating temperature.

Solar Heating and Cooling Systems

A typical solar heating system uses flat plate collectors located on a southward sloping roof to heat water which is stored in a hot water tank. This heat reservoir for a single dwelling could be a tank 2 m in diameter, 2 m deep, and insulated on all sides. An auxiliary heating system is necessary to provide heat during extended cold and cloudy periods when the supply of solar heat is not adequate.

A control system extracts heat from the solar collector when it is available, but shuts off the flow through the collector whenever the collector temperature drops below the storage temperature. The pump circulates whater through the collector whenever the collector outlet temperature exceeds the storage temperature. If the room temperature is lower than both the collector temperature and the thermostat setting, water from the collector is circulated directly through the heating coil. If the room temperature is lower than both the thermostat setting and the storage temperature, but higher than the collector temperature (such as at night), hot water from the storage tank is circulated through the heating unit.

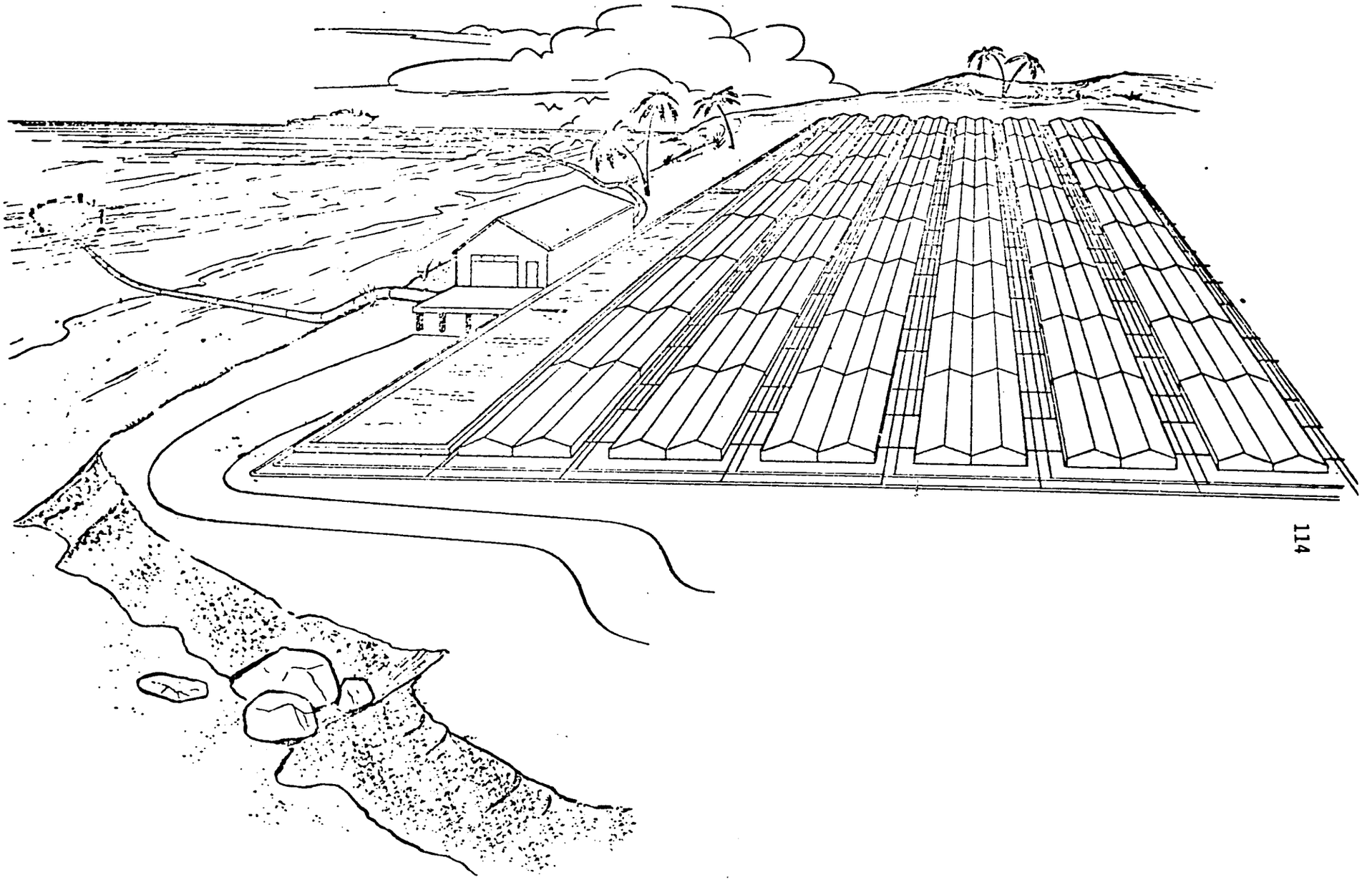

FIGURE 6 Large Solar Still

A simple technique for heating and cooling a house is to locate a pond of water 15 - 25 cm deep on the roof. The pond is covered by thermally insulating panels which can be open or closed. In the winter all the water is enclosed in polyethylene bags atop a black plastic liner. Sunlight heats the water to about 30° C during the day. At night, the insulating panels cover the water to prevent loss of heat to space. During the summer, the insulating panels are open at night and closed during the day, so the water is cooled by radiation to space at night. Tests with a small 3 m by 3.7 m structure showed that temperatures were maintained close to 21° C year round, even though ambient temperatures ranged from subfreezing to 40° C.

An economically attractive natural circulation solar heating system has been developed in France and tested with several full-sized houses. A south-facing concrete wall is painted black and covered with glass, with an air gap between the wall and the glass. Sunlight heats the concrete wall and air circulates through vents from the room, rises as it is heated in the air gap, and flows out into the room through vents near the ceiling. The concrete wall acts both as a heat collector and a heat storage medium, since the warmed wall continues to provide heat in the evening. During the summer the room vent near the ceiling is closed and an exterior vent opened, so the system operates as before but the warmed air flows outside, drawing cooler air into the room from the north side of the house. This type of solar heating system can supply half or more of the year-round heating requirements of these homes in France.

Solar Power

The two main approaches to solar-thermal power generation are the central receiver concept, in which sunlight reflected from many different locations is

concentrated on a single heat exchanger, and the distribution system, with a large number of linear reflectors focusing solar radiation on long pipes which collect the heat.

A central collector system is an attractive method to concentrate solar radiation and convert it to heat energy in a useful form for electrical power generation or synfuels production. In this concept a large field of steered mirrors reflect solar radiation to a single contral receiver. The solar radiation can be highly concentrated, and the high-temperature heat used for a power or chemical cycle. The use of a central receiver avoids the need for the large heat transfer flow networks required when large arrays of focusing collectors are used to deliver energy to centrally located conversion equipment. The selection of mirror size for a given size field, the percent of total solar input that can be captured by a mirror array, and the possible tower structural designs have been studied in detail.

A 100 kW plant has been built and operated in Italy and a 400 kW plant is at Georgia Tech in the U.S.A. An advantage of this system is that the separate mirrors and steering mechanisms can be inexpensively mass produced, and the smaller reflectors are less subject to high wind loadings than a single large steerable concentrator of the same total collector area.

The various proposals to generate electrical power using heat collected by a large number of solar collectors spread over a large area have been examined. Almost all types of solar heat-collecting devices have been considered for thermal power generation, including flat plate collectors with selective coatings. Usually focusing collectors are advocated because of the importance of high-temperature heat collection for power generation. Systems have been proposed using parabolic trough concentrators to focus sunlight onto a central

pipe surrounded by an evacuated quartz envelope. Heat collected by a fluid flowing through the pipes could be stored at temperatures over 500° C in a molten eutectic and used as required to produce high enthalpy steam for electric power generation. Another approach is to store the heat in rocks, and extract the heat as required to generate steam on demand.

The fixed-mirror solar concentrator produces a sharply focused line image regardless of the incident sun direction. The major advantage of the fixed mirror concentrator is its potential cost reduction as compared with other types of concentrators capable of providing heat at more than 500° C. A 50 m^2 fixed mirror concentrating heat supply system has been built at Georgia Tech. The concentrator uses 28 mirrored facets to concentrate sunlight onto a heat exchanger. The collector is 2 m wide by 24.5 m long. This type of collector may prove cost effective in the next few years for high-temperature applications.

Performance Analysis Techniques

Several computer programs are now in use to evaluate the performance of heating and cooling systems for buildings. The detailed engineering design information required to make accurate predictions for using solar energy include the effects of variations in flat plate collector designs (angle of tilt, number and type of cover plates, efficiencies, flow rates), storage capacity and form of storage (water, salts, solids, paraffins), load patterns (meteorological effects, use patterns, internal heat sources, temperature zones), building variables (orientation, window area, construction details, architectural features, shading, infiltration, heating and cooling distribution system options, etc.), and an economic analysis (sensitivity to first cost, compari-

sons of life cycle costs as functions of interest rates and fuel prices, variations between types of fuel, distributions with respect to location, etc.). In order to study the effects of each variable and select a successful path through the labyrinth of operations, one must have an extremely versatile and relatively sophisticated computer available.

Solar Power and Synfuels

Solar energy holds great promise for the production of electric power and synthetic fuels; however, these processes are not presently economically competitive nor are they expected to be on a large scale before the turn of century. Solar power may be generated from high-temperature collectors, directly from solar cells, from ocean thermal gradients, and from biomass. Synthetic fuels may also be produced from biomass, from high-temperature thermochemical cycles, or from solar-generated electricity.

APPENDIX I.B

REMARKS ON PHOTOVOLTAIC SOURCES
- Brown F. Williams

Introduction

Photovoltaic power supplies are in use today because they provide cost-effective electric power under numerous circumstances. These circumstances are all characterized by a lack of electric power availability from conventional power grid sources. Because of the decreasing price of the photovoltaic arrays themselves, the number of cost-effective applications is increasing. The purpose of this review is to indicate the present cost of photovoltaic electricity, compare it to an alternative, diesel electric generation, and estimate the cost of water provided by a photovoltaic water pump. An estimate of the timing of future cost reductions is also given.

Figure 1 shows examples of the three types of photovoltaic array types which are presently under development. In the flat plate collector, the solar cells are covering most of the area exposed to the sun. These devices are expensive because of the large amount of semi-conductor (light-sensitive) material used. Concentrators use plastic or glass lenses or mirrors to focus light on a reduced area of semi-conductor material. This substitutes lens or mirror material for the usually more expensive semi-conductor material. The complexity of the system is increased, however, especially for large concentration factors, because tracking the motion of the sun is required. Flat plate

arrays are common today, and concentrator systems are experiencing very limited use. This may change. Further, practically all arrays use silicon as the semi-conductor material; however, Cu_2S - CdS arrays are also in limited production. There are numerous other materials under study. In the remainder of this review, the specific nature of the power supply is not considered, and the only important concern is the cost of the array and its peak power output. This is expressed in Dolars/Watt ($/W).

Figure 2 compares the cost of electricity generation for gasoline and diesel engine driven generators. Gasoline engines have lower initial cost and have short life. They also use more fuel per kW hr and this fuel costs more. Because of the relatively short life of either engine, the impact of interest cost is not great. For fuel costs of $1 gal, electricity costs $0.35 per kW hr. Fuel costs must include delivery cost.

For any power supply, the capabilities of the supply should be matched to the needs. The effect of underutilizing a diesel generator is shown in Figure 3. The life is not dramatically altered by drawing less power. Fuel consumption is one-half maximum at no load. Photovoltaic devices are modular and can be matched to the load.

Figure 4 shows present-day costs of electricity generated by photovoltaic arrays. It is important to compare a photovoltaic power supply which can provide the same services as the diesel generator. For this reason the costs in Figure 4 include battery storage for up to 20 days. If temporary interruption of the service is permissible, then the no

storage case may be appropriate. The data on which these costs were derived was based on sunshine data in June 1966. (See Figure 5.)

Photovoltaic array costs are decreasing. Figure 6 shows my estimate of these costs, which is identical to the U.S. Government estimates for large systems.

The implication of these potential reductions on electricity costs are shown in Figure 7. At a selling price of $2 watt, anticipated in 1982, electricity is produced for $0.11 kW hr, with an array financed at 10 percent interest and a 20-year life. As an example of costs for mechanical work performed by such a power supply, we consider the system described in Figure 8. This water pump uses a battery to interface between the motor and the solar cells, so that the motor and pump operate at high efficiency. In this particular case, the efficiency of the motor + pump combination is 17 percent. A practical maximum is 60 percent. The poor efficiency in this example is due to the mismatch between the pump for which we could get real costs and the work performed. This system is analyzed for two cases: pumping at constant rate for 12 hours and at constant rate for 24 hours. The costs for the water pump system can be seen in Figure 9. At an array cost of $2 watt, the cost is $0.03/1000 gal. In terms of today's costs, $20/watt for the array, the cost is $0.20/1000 gal.

Conclusion

Depending on the costs of alternative fuels, photovoltaic power supplies are already cost effective. With the expected cost reductions within 5 years, these systems will be cost competitive with small fossil fuel generators anywhere the cost of fuel is $1/gal or more.

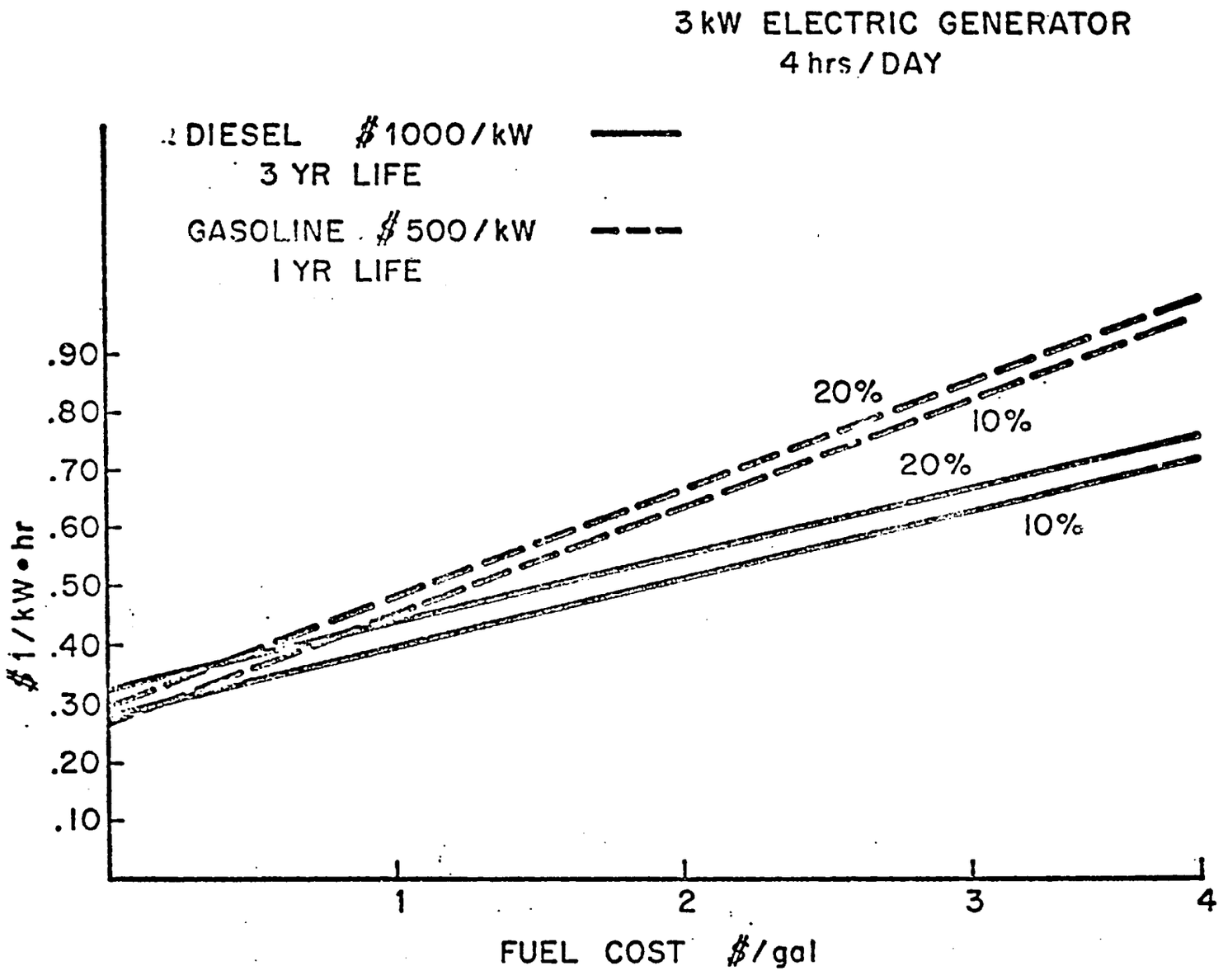
3 kW ELECTRIC GENERATOR
4 hrs / DAY
DIESEL $1000/kW
3 YR LIFE
GASOLINE $500/kW
1 YR LIFE
20%
10%
20%
10%
.90
.80
.70
.60
.50
.40
.30
.20
.10
$1/kW•hr
1
2
3
4
FUEL COST $/gal

FIGURE 2

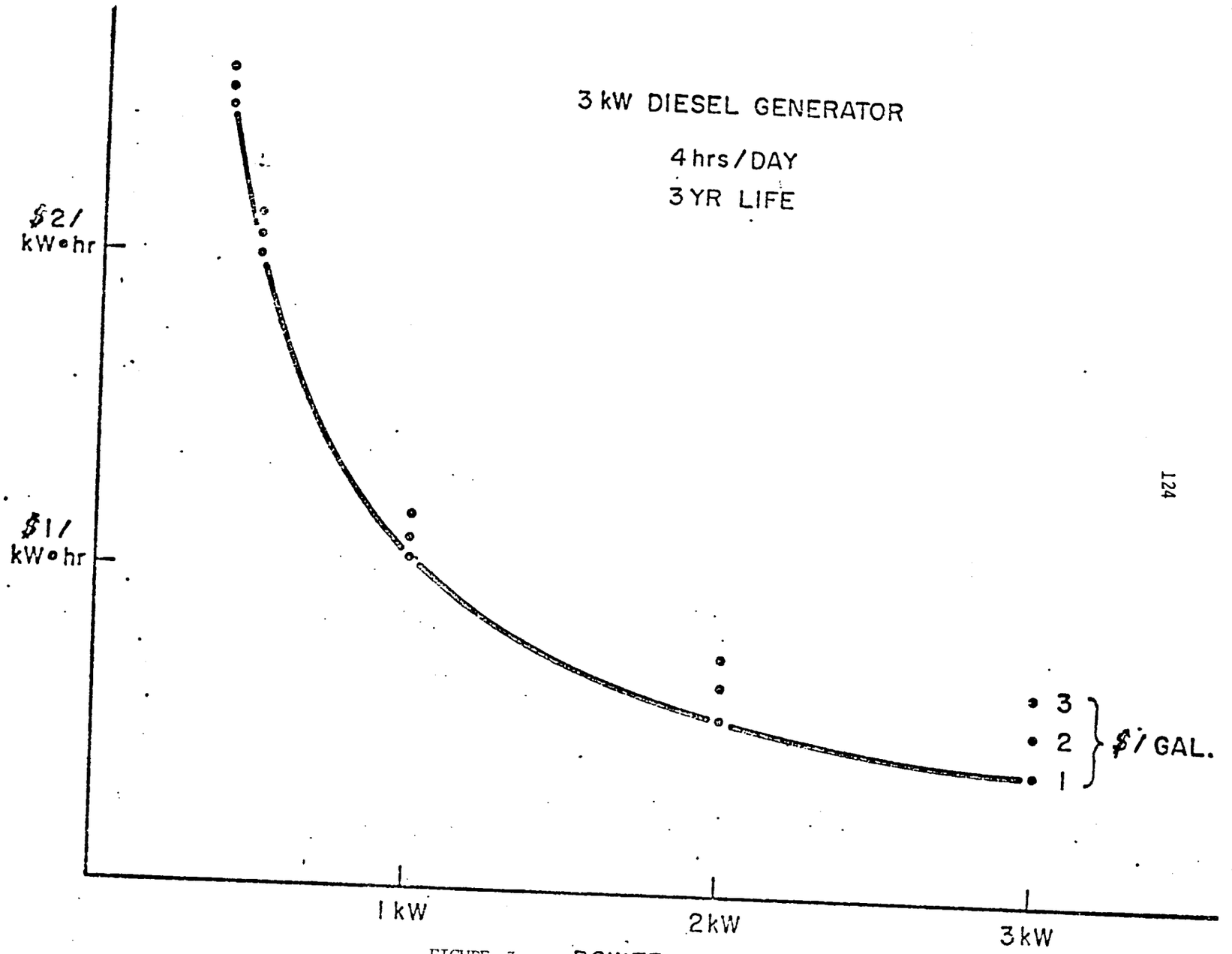
3 kW DIESEL GENERATOR
4 hrs/DAY
3 YR LIFE
$2/ kW•hr
$1/ kW•hr
3
2
1
$/GAL.
1 kW
2 kW
3 kW
POWER CONSUMED

FIGURE 3

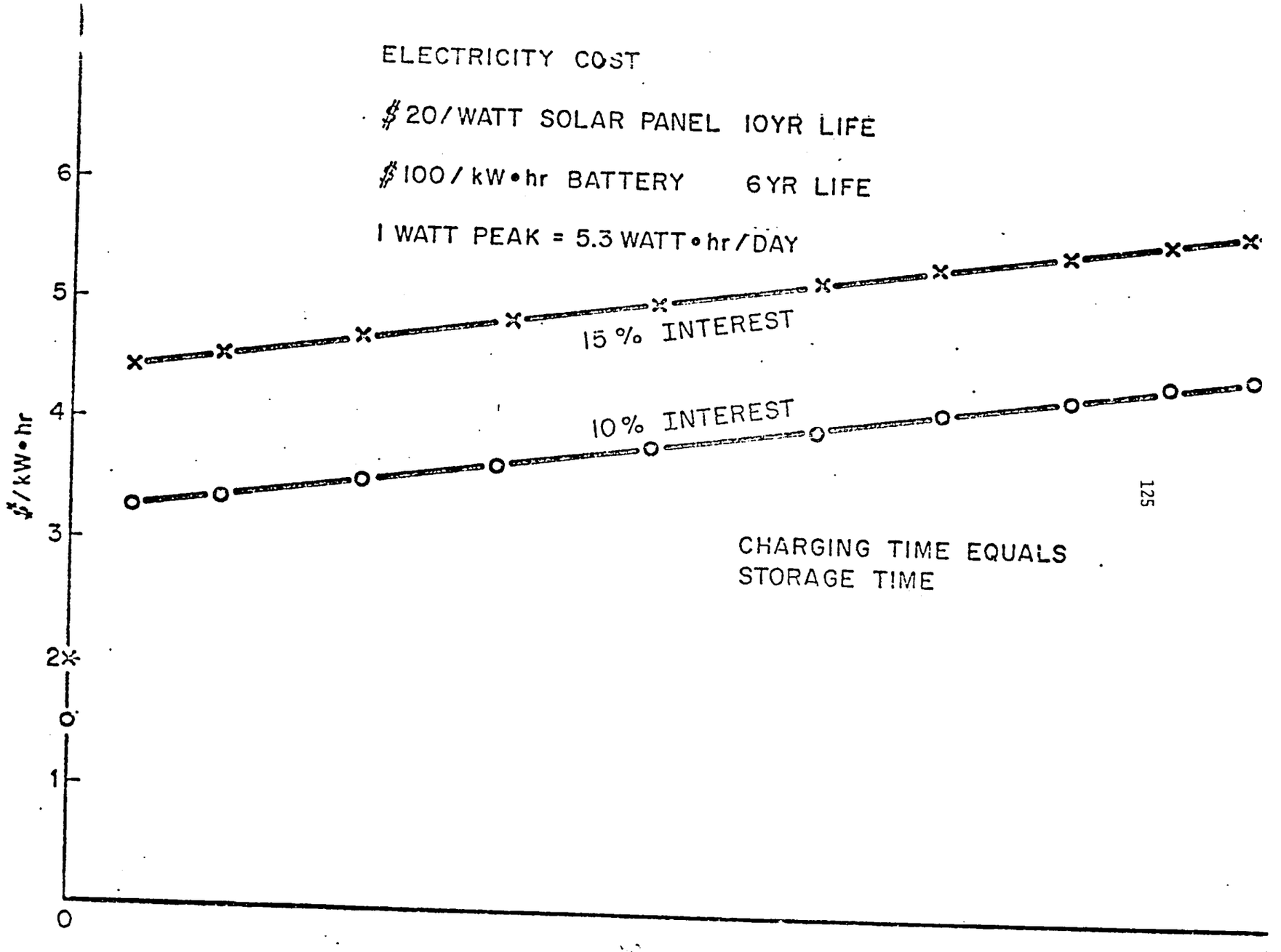
ELECTRICITY COST
$20/WATT SOLAR PANEL 10YR LIFE
$100/kW•hr BATTERY 6YR LIFE
1 WATT PEAK = 5.3 WATT•hr/DAY
15 % INTEREST
10 % INTEREST
CHARGING TIME EQUALS
STORAGE TIME
$/kW•hr
0
1
2
3
4
5
6
DAYS OF STORAGE

FIGURE 4

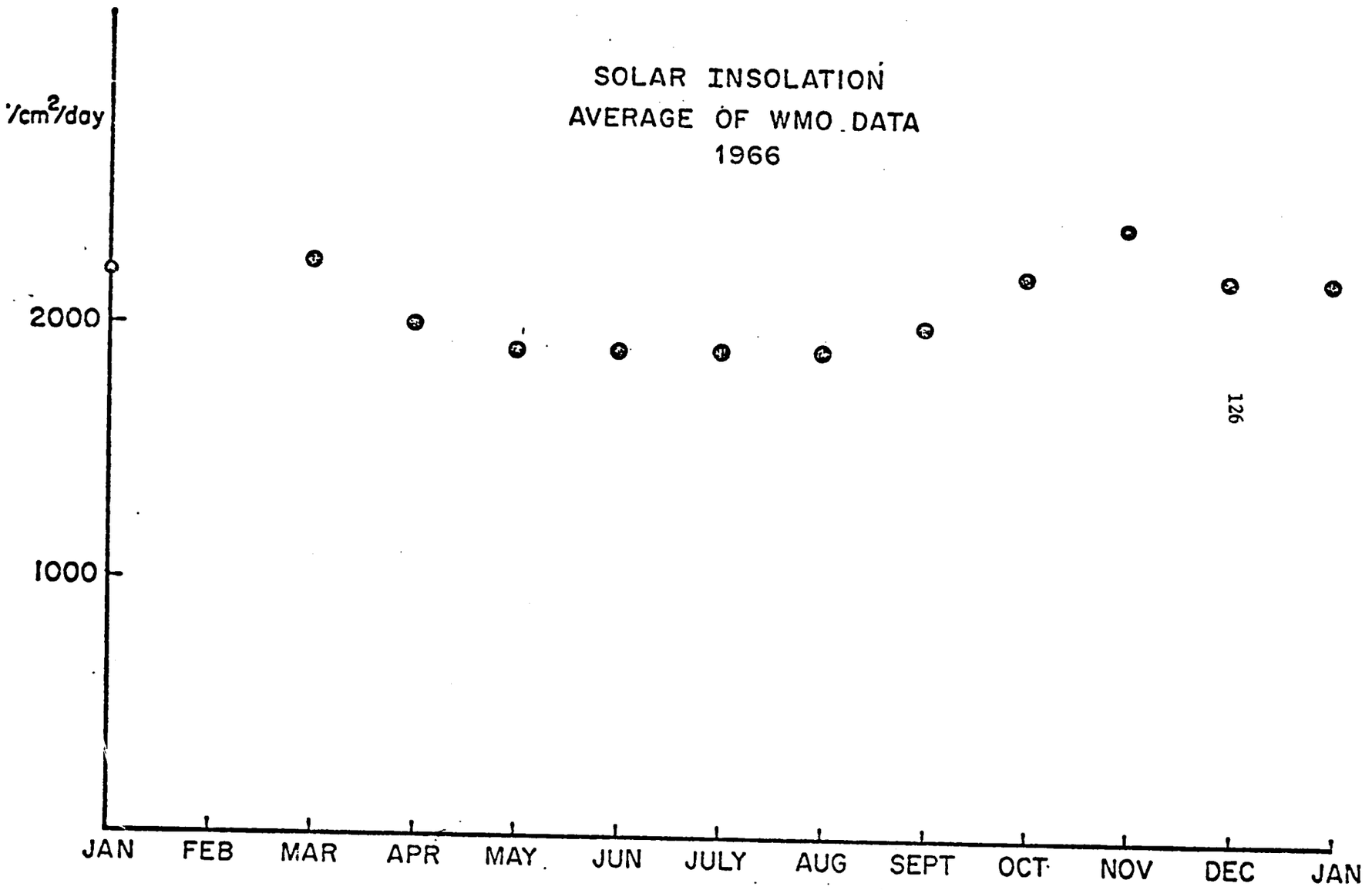
SOLAR INSOLATION
AVERAGE OF WMO DATA
1966
/cm²/day
2000
1000
JAN
FEB
MAR
APR
MAY
JUN
JULY
AUG
SEPT
OCT
NOV
DEC
JAN

FIGURE 5

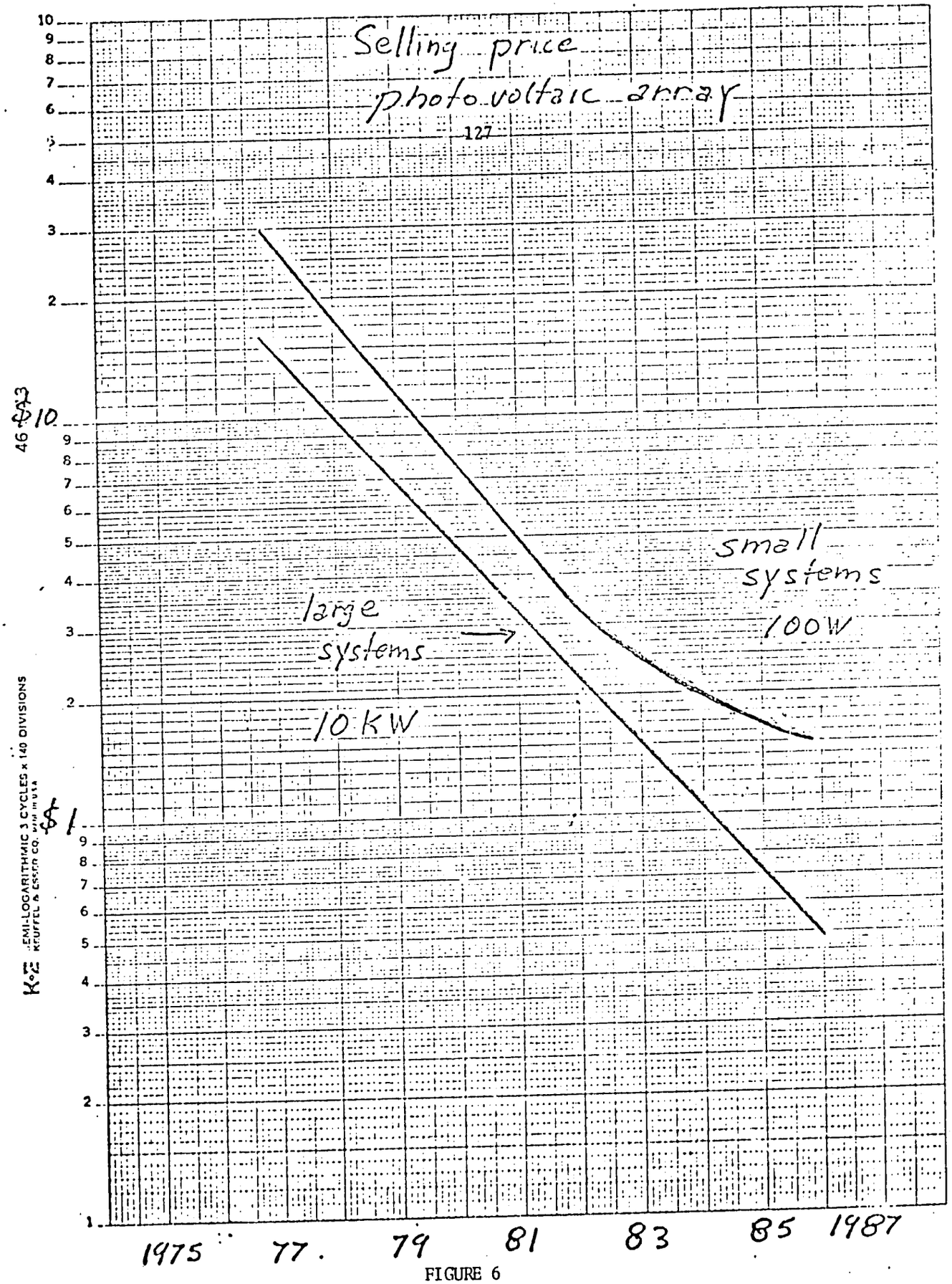
Selling price
photovoltaic array
small systems 100W
large systems
10 KW
$10
$1
1975
77
79
81
83
85
1987
SEMI-LOGARITHMIC 3 CYCLES x 140 DIVISIONS
KEUFFEL & ESSER CO.

FIGURE 6

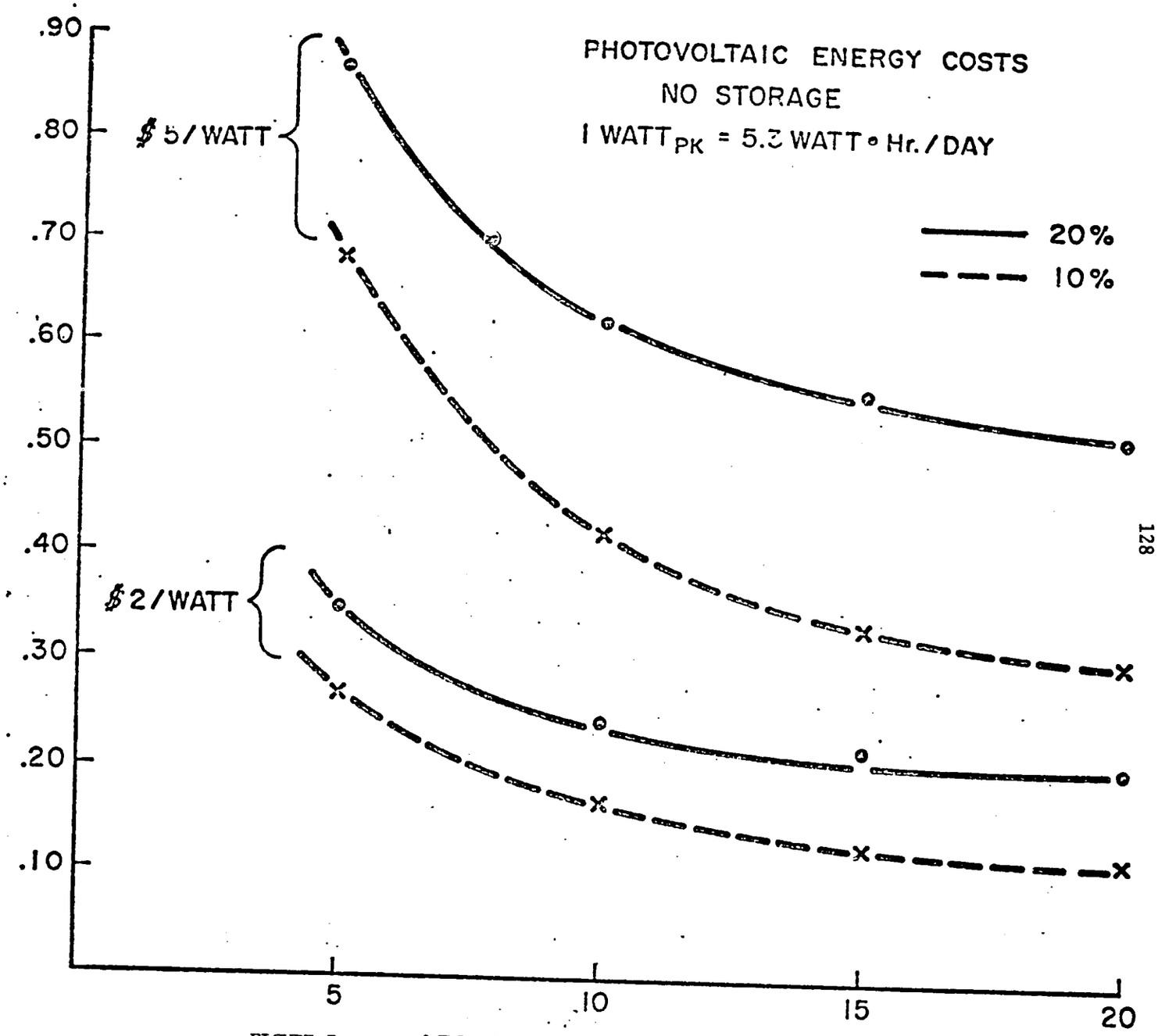
PHOTOVOLTAIC ENERGY COSTS
NO STORAGE
1 WATT$_{PK}$ = 5.3 WATT • Hr./DAY
20%
10%
$5/WATT
$2/WATT
.90
.80
.70
.60
.50
.40
.30
.20
.10
5
10
15
20
ARRAY LIFE TIME, YRS.

FIGURE 7

PHOTOVOLTAIC WATER PUMP 12 HR/DAY (24 HR/DAY)

	PV ARRAY	BATTERY STORAGE	DC MOTOR	PUMP
SIZE	1.4 kW pk (2.8)	2.25 kW·HR (13)	1 HP = 746 W	4000 GPH 10 FT
COST	$20-$2/WATT	$225 ($1,300)	$120	$50
LIFE	20 YR	6 YR	10 YR	10 YR
EFFICIENCY		85%	17%	

FIGURE 8

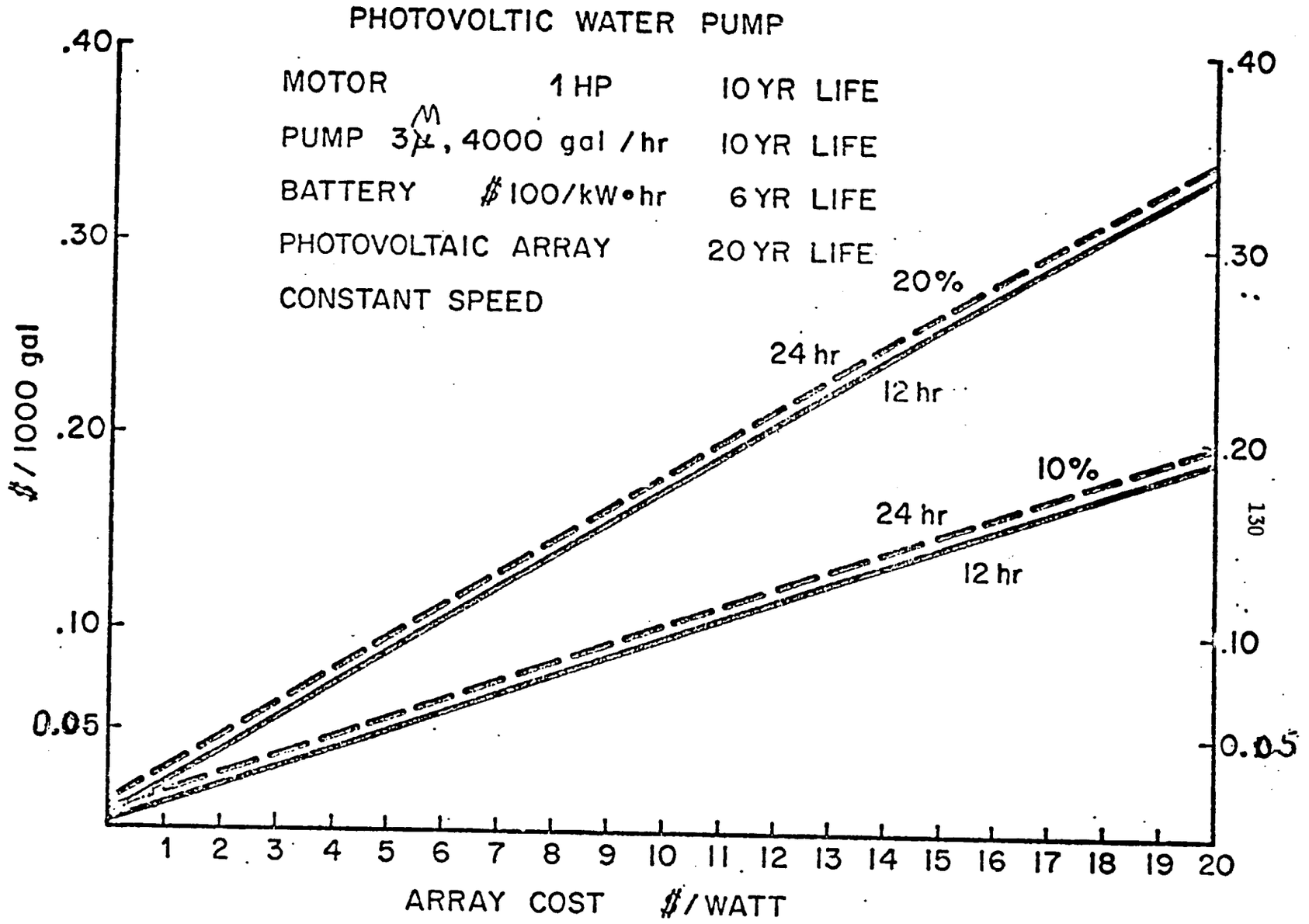
PHOTOVOLTIC WATER PUMP
MOTOR 1 HP 10 YR LIFE
PUMP 3M, 4000 gal /hr 10 YR LIFE
BATTERY $100/kW•hr 6 YR LIFE
PHOTOVOLTAIC ARRAY 20 YR LIFE
CONSTANT SPEED
20%
24 hr
12 hr
10%
24 hr
12 hr
$/1000 gal
.40
.30
.20
.10
0.05
1 2 3 4 5 6 7 8 9 10 11 12 13 14 15 16 17 18 19 20
ARRAY COST $/WATT

FIGURE 9

APPENDIX I.C

PRESENTATION
-- Thomas A. Lawand

This technology has been developed in order to help people living in arid or semiarid areas who have no easy source of fresh water. In most cases brackish water cannot be used for animals and people, as it contains a lot of undesirable elements.

Small solar distillation plants to supply water for drinking and even for agriculture have been devised. This process of water purification is very important for health and in some parts of the Caribbean Islands it has proved very successful. The technology involves using solar reflectors with glass on which water condenses before it is collected in troughs and used by the people for drinking. Since the amount of water created is small, this water is not used for flushing into the latrines or for washing.

The use of glass was in certain areas substituted by plastic sheets, though their life is short due to deterioration. It was hoped that this kind of technology could find some application in arid and semiarid areas mentioned earlier. Application could also be sought in the Brine Lagoons that will be visited at a later date. While solar energy would be used to increase faster evaporation of water in salt production, this same water could be used in generating fresh water for the people. Some energy losses from this kind of device were found to be reflection on the glass surface (40 percent), absorption

(5 percent); reflection from the bottom (5 percent), and radiation (15 percent). The system was still quite efficient in the process of desalination and solar distillation.

Solar Energy for Drying

Solar energy has been used as a vast source of energy in drying and food preservation in areas where conventional energy resources are expensive.

Of all the direct uses of solar energy, sun drying of crops is perhaps the most ancient and widespread. The traditional methods differ from place to place but they involve spreading material in a thin layer that is then exposed to the sun to dry. Solar drying technology now involves drying materials without exposure to direct sun, and hence other environmental factors including rain, wind, insects, vermin, and birds, etc., by means of solar-heated air in more protected environments.

A number of designs have been devised that use solar-heated air, and others that use a combination of direct drying and air drying. In Tanzania, the problem of using direct sun for drying, particularly for fish, grain legumes, etc., were cited, since during the rainy season sunshine is hidden and rain pours heavily. Under these conditions, firewood or charcoal or other conventional sources of energy are used and these are expensive.

The workshop was urged to seriously look into the problem of food drying by using this technology. Locally available materials which are relatively simple should be used, of course, without losing the technological skills involved. The sizes and shapes could be modified to suit local needs.

Combination of solar collector-dryers with flat plate air heaters and energy storage should be of conceivable benefit. So far, Tanzania has done very little in the form of research in this direction. It was, however,

reported that the Tanzania Food and Nutrition Center has been looking into ways of improving preparation and storage of food using the locally available technologies.

Solar Cooking

The problem of cooking in arid and semiarid regions was very much similar to the problem of water.

In some parts of the world, deforestation has led to disastrous effects on the environment, causing soil erosion, river silting, decrease in rainfall, decrease in fuel energy, and reduction in size of rivers.

The calorific value of some fuel products are:

Animal dung	2,200	KCal/kg
Firewood	4,800	KCal/kg
Charcoal	8,000	KCal/kg
Kerosene	10,000	KCal/kg
Peanut shells	6,000	KCal/kg
Compressed nut shells	8,000	KCal/kg*

It was further reported that 3 kg of butane was equivalent to 24 kg of charcoal, thus showing greater efficiency of gas for cooking over charcoal and wood that are currently used in our villages. It was observed that there were a number of losses resulting in 20 percent of the energy from the fuel used for actual cooking since 45 percent of it was lost by convection and 35 percent lost to evaporated water during cooking.

Major world sources of energy were cited as follows:

1. Fossil fuels (coals, oil, peat, natural gas).
2. Wood and vegetable wastes.

---

*Information obtained from the Senegalese Government.

3. Edible crops which generate human and animal energy (muscular energy).
4. Hydroelectric energy.
5. Environmental heat.
6. Solar energy.

Of the incoming solar energy about 50 percent is lost by radiation.

Cooking traditions using some of the above sources of energy are varied. In India, for example, cow dung is used for cooking. The traditional stoves have, however, been modified. Aluminum solar cookers are replacing the cow-dung energy cookers. The problem faced by this technology, however, is that the cooking has to be done in the open. This, sociologically, has been the great obstacle for using these stoves, and instead, the energy is now mainly used for pressing clothes.

Further developments have indicated that greater efficiency in cooking using solar stoves can be improved by using pressure cookers. For large-scale cooking, the technology, so far, needs further research before it is used.

APPENDIX I.D

U.S. SOLAR ENERGY PROGRAMS
--Norman L. Brown

An almost complete review of the U.S. solar energy program has already been given in the comprehensive presentations by Brown Williams and Richard Williams. It is a program aimed at meeting the energy needs of the United States, and since these needs are large-scale needs, the program is concerned primarily with research for large-scale solutions. The few exceptions are largely in crop-drying, as you have seen in Tom Lawand's presentation, and in wind-energy conversion. But even those involve technological approaches that are not applicable to village energy needs in Tanzania. There are, however, two aspects of the overall U.S. energy program that are particularly pertinent to the concerns of this workshop, and in the short time left for me I shall confine myself to discussing them.

A comprehensive program of cooperation in energy research, development, and demonstration with developing countries is currently being developed by the U.S. Agency for International Development, the Department of State, and the Energy Research and Development Administration (just recently reorganized into a new Department of Energy). Among the aims of this program are the improvement of the quality of life in developing countries and assisting them in reducing their dependence on petroleum. In the case of Tanzania, since 90 percent of your population is in the villages, this program would be concerned

with the development and application of small-scale decentalized technologies based on renewable resources.

The approach we shall be using is based on an assessment of the resources and needs, an evaluation of potentially applicable technologies, and cooperation in the development, demonstration, and use of those technologies. A major element of the program involves training in both planning and analysis skills and technology development. Thus an exchange of scientists, technologists, and management and planning personnel is envisioned.

One of the things I hope to see developed is the establishment of a system of paired sites--one in the United States and one in the developing country--where the physical and meteorological characteristics are similar. (The United States is a large country with a wide variety of ecological conditions, so this kind of matching would not be difficult.) In this way, the same technologies could be investigated at each site, personnel exchanged, and a cooperative approach to solving problems more easily established. The other aspect of the U.S. energy program that may be relevant to the concerns of this workshop is a newly funded program in appropriate technology. Although this program is aimed at domestic needs in the United States, it is deliberatly designed to attract and support ideas from individuals and small groups whose suggestions would not normally be of interest to the large-scale orientation of the rest of the U.S. energy program.

Most of the people who will participate in this program will be those who are concerned with our increasing dependence on the power grid and are seeking a degree of independence by way of decentralization and smaller-scale technologies. In addition, they are concerned with our wasteful use of non-renewable

resources and seek technologies using renewable resources, based on locally available skills and materials, to the greatest extent possible. Although these concerns are shared by many people in the United States, it is primarily younger people who have been actively interested in these "appropriate" technologies, and I have great hopes that this program will produce results useful for both the United States and for countries like Tanzania. I might point out in passing that a strong precedent exists for development of a new technology by people not normally part of the "system." Radio communication owes its rapid and exciting early development to the efforts and devotion of thousands of young, enthusiastic amateur radio operators, many of whom had no formal training in the field, who worked on their own and in small groups, with no support except their own means.

I look forward to the combined efforts of our domestic Appropriate Technology Program and our U.S. Program for International Energy Development with less developed countries to develop and apply the kinds of technologies that will help meet the energy needs of the villages of Tanzania.

APPENDIX I.E

UTILIZATION OF SOLAR ENERGY IN FOOD PRESERVATION
-- T. W. Maembe

Introduction

Traditionally, sun drying is one of man's oldest methods of preservation. Cereal grains are preserved by natural drying in the field and the natural process is so efficient that it hardly required added effort by man. However, during bad climatical conditions, man attempted to assist the natural drying process by supplying heat to save the grains from decomposing. The natural sun drying of food yields highly concentrated materials of enduring quality, but a highly complex and technological society cannot depend on the reliability of the elements. With modern technology it is possible to harness solar energy for purposes of food dehydration where dehydration is defined as the process of artificial drying.

Climatically, Tanzania is well placed for use of direct solar energy for preserving foods, e.g., cereals, fruits, meats, fish, and vegetables, because there is a high percentage of cloud-free, sunlight days in a year. The workshop should therefore aim at drawing up a suitable program for harnessing this energy for direct and indirect use by villages in Tanzania under the villagization program.

Solar Energy Potential

The natural process of sun drying is at the mercy of the elements, and plenty of area is required for exposing the product to the direct rays of the sun. In sun drying of fruits, approximately one acre of drying surface is required per 20 acres of crop land with an average yield. Under good climatic conditions (in the tropics), it would appear economic to sun dry foods, as the sun is available at no cost and traditionally no complicated equipment is engaged. Sun drying has the following disadvantages:

1. The traditional process is uncontrollable, as it is at the mercy of the elements.

2. Good quality of the product cannot be guaranteed.

3. A lot of area is required for the drying purposes. This would tie up land that could be used for agricultural or other purposes.

4. Sanitary conditions cannot be controlled, as the food can often be contaminated by dust, insects, birds, and rodents. The quality of the product is often reduced by beetle infestation during drying.

5. Sun drying is time consuming but economical, in the sense that no cost is committed to making the energy available.

With advances in technology and the rising fuel costs, it would still be considered feasible for economic development to harness solar energy for food dehydration instead of depending on the traditional sun drying. Dehydration, as has already been mentioned, imples control over climatic conditions within a chamber or micro-environment control.

Ways of designing simple solar energy dehydrators suitable for use in villages should be the concern of the workshop. This should take the form of solar energy collection and storage equipment for use in operating driers for

processing of different food products. When preparing annual plans at the village level, integrated planning should be stressed to make room for use of solar energy. Trained solar energy technicians could be made available to impart this important technology to the villagers.

At present, fish smoking and drying (to pick a simple village example) is undertaken by utilizing kilns whose fuel supply has to come from wood. Recent mass destruction of forests indicates that in future wood is going to be expensive and difficult to obtain, and a continuous supply of firewood for fish smoking cannot be guaranteed. Besides, traditional fish smoking by using wood produces a product of low quality. Proper control of solar energy concentrators will ensure that energy is available at low cost for the fish drying operation.

Commercial Aspects of Solar Energy Utilization

The commercial utilization of solar energy other than direct sun drying in food technology is ideal for tropical countries whose limited financial resources will not allow them to compete in utilizing other sources of fuel due to the constant escalation of prices of oil. Solar energy may be utilized to heat air which, in turn, could be used in hot-air driers for drying of vegetables, fruits, fish, milk, and a variety of milk products. Air is recommended here as the drying medium to be heated by solar energy concentrators because its plentiful, convenient, and overheating of the food can be controlled. Air will be used to conduct solar energy through food placed for dehydration in suitable driers.

Where utilization of solar energy is found suitable, the goal should be multiple use of this energy at the village level. Information is already available on the type of solar energy collectors and concentrators that can be

available for use. What is required now is transferring this technology to commercial small-scale operations at the village level. The following types of driers should be investigated and the possibility of utilizing solar energy for their economic operation at the village level defined: 1) cabinet driers, ii) tunnel driers, and iii) kiln driers.

The use of solar energy dehydrators will ensure that the product produced is of better quality, since the dehydration temperature and other physical conditions can be controlled. The sanitary aspects of the process can also be improved. The use of solar energy will reduce the expenses associated with fuel from other sources utilized for dehydration. Generation of heat from solar energy will provide the following economic benefits in a commercial operation.

1. Ensure the lowest fuel cost per unit of useful heat, since the sun is obtainable free of charge. The only investment required is the provision of energy collectors and concentrators to provide enough energy to support commercial requirements.

2. Ensure lowest capital and maintenance costs for the collection and transfer equipment.

3. Ensure lowest direct labor cost per unit of useful heat.

4. Ensure that there are no fire and explosion hazards under dusty conditions.

5. Ensure the lowest risk of product contamination by the source of energy and its by-products.

Further, the solar energy utilizing food processing equipment should be flexible in operation and control and should ensure maximum reliability in producing the type of product required in terms of quality. The workshop should

come up with recommendations that will enable our reliance on costly fuels to be reexamined with the ultimate objective of utilizing the readily available solar energy.

Quality Aspects of Solar Energy Processed Food Products

An acceptable dehydrated food should be competitive pricewise with other types of preserved foods, and have a taste, odor and appearance comparable with the fresh product. Since solar energy is likely to be available at low cost, the final price of the product is due to be low and with care during processing the processed product should be attractive. In drying a food looses its moisture content which results in increasing the concentration of nutients in the remaining mass. Proteins, fats and carbohydrates are present in larger amounts per unit of weight in dried foods than in their fresh counterpart.

TABLE 1 Comparative Composition of Dry and Fresh Meat

Meat	Percentage Composition	
	Fresh	Dried
Proteins	20	55
Fats	10	30
Carbohydrates	1	1
Moisture	68	10
Ash	1	4

Source: The Technology of Food Preservation by Norman W. Dosrosier.

The biological value of dried protein is dependent on the method of drying. Sun dried fish Tilapia sp. has a high-quality protein if, during the process of drying, sanitary conditions are observed and contamination of the product by insects is prevented. Proflonged exposure to high temperatures of over 80° C can render the protein less useful. Direct rays of the sun are also known to cause decomposition of some vitamins in certain foods.

Solar concentrators able to produce low temperature are recommended, as low-temperature treatment of protein makes the digestibility easier.

It is a common observation that rancidity is an important problem in dried foods. Since the oxidation of fats in foods is greater at high temperatures than at low temperatures of dehydration, any solar dehydrator should take this factor into account to ensure good quality of solar energy processed food products.

The use of antioxidants to protect the oxidation of fats may be investigated.

Carbohydrate deterioration (by browning) is very noticable in fruits and vegetables being sun dried. Products that will deteriorate when being subjected to solar energy processing should be protected by treating them with suitable agents. Fish contains small amounts of carbohydrate and therefore their carbohydrate deterioration is of minor importance.

The color of sun dried fruits changes depending on the chemical composition. When designing solar energy food processing equipment, the need to preserve the color of the final product should be taken into account.

Summary and Conclusions

In principle, dehydrated foods find their greatest use in times of disaster, either natural or man-made. While it is true that drying is one of the

principal methods of food preservation and a natural force used by plants in the preservation of seeds and fruits, dried vegetables have not been popular when wartime or national disaster does not enforce their use.

Dried fish find a good market in most villages in Tanzania and, with a good distribution system, could act as a good source of protein in villages lacking this commodity. Sun dried dagaa finds a good market in Zaire, Zambia, and in Tanzania.

Current-day drying operations are expensive but yield highly acceptable food products as is noticed in dried skimmed milk, potato flakes, soup mixes, soluble coffee, etc. The obvious economic benefits in the distribution of a highly acceptable dried food should find increasing use being placed on this method of food preservation.

The higher fuel costs normally required for operation of driers will require greater attention to be placed in finding alternative sources of cheap energy. There is, therefore, every reason to recommend that developing tropical countries should place greater emphasis on solar energy utilization.

Solar energy will be available at reduced cost, which will ensure low cost of the final product. The workshop will find it important to come up with an action plan recommending that appropriate action be taken to train local scientists on solar energy technology as means of assisting Tanzania to provide itself with cheap energy so much required for our economic development. Small-scale solar energy food preservation equipment can be experimented on and, if found suitable, should be recommended for use at the village level to reduce the dependence on high-cost energy. The rays of the sun will be economically wasted unless we plan to harness them for economic and social development.

References

1. Desrosier, N. W. The Technology of Food Preservation (AVI 1959).

2. Morris, T. N. The Dehydration of Food (Chapman and Hall).

3. Charm, W. E. The Fundamentals of Food Engineering (AVI 1972).

4. Gorling, P. Physical Phenomena During the Drying of Foodstuffs (S.C.J. 1958).

APPENDIX J

VILLAGE CHARACTERISTICS: KIMBIJI, CHENGENI, KEREGE
--Priscilla Reining

I. Type of Agro-economy

Kimbiji, Chengeni, and Kerege are all coastal villages inhabited by the Zaramo people who profess Islam and who practice a diversified economy based on gardening, grain and tree crops, and fishing. Except for chickens, they keep little livestock. The garden crops are cassava, sweet potatoes, and maize, which are planted in mounds. The coastal area in which the three villages are situated is in various stages of active shifting cultivation. Some areas are not inhabited, or have the appearance of very sparce population. The tree crops are mango, cashew, almond, and palm. Cashew predominates and is "wild"; papaya is predominately near habitations; palm and mango are common; and almond is present but rare. Rice is grown as a plantation crop of the upland variety. Fishing for subsistence and, to some extent, for commercial purposes is practiced using dugouts and outrigger canoes in the immediate coastal waters. The boats in Kimbiji were not mechanized.

On this generalized base, the newly forming village of Chengeni is actively engaged in the specialized processing of ocean water to harvest salt, and Kerege is in charge of a diversified and modernized farming operation--comprising cotton, dairy cattle, palms, and cashews. Kimbiji has acquired a mechanized rice-farming operation.

II. Type of Settlement Pattern

The Kimbiji settlement pattern is an extensive area of dispersed compounds, each compound surrounded by its own kitchen garden of cassava, maize, beans, papaya, and mango trees. The village center consists of a shop, two hotels, the village office, and fruit and fish stalls. The water tap is centrally located and several houses are aligned in rows in the immediate vicinity. The houses are designed in the classic Swahili style of a rectangle with veranda, constructed of poles, reeds, and mud and roofed with thatch. New components of the village--the clinic, water tank, school, and the mechanized rice installations are located at a distance from the village in several different directions. In addition to the principal compound, many households have access to a shelter for use during the rice-harvesting period; each household maintains its own shelter at the rice fields. The village center is inland, approximately 1 km from the beach. The village has also acquired a refrigerator (non-functioning) for storing fish. The village components are widely dispersed but located in the immediate vicinity of the appropriate activity.

Chengeni salt works does not yet have a housing area for the families of the village-to-be. The nucleus of the village is the salt works. Plans have been made to select the village site, construct housing, and move families.

Kerege has an extensive set of buildings, which form the installations for dairying, cashew nut hulling, cotton seed processing, cotton storage, sesame storage, grinding, and storage for coconut harvest. The living areas of the village were not visited.

III. The Historical, Ecological, and Social Aspects of Settlement Patterns

1. Historical

Kimbiji appears to conform more closely to the usual Zaramo village pattern than do the two recent ones. The village is registered. Chengeni has recently been created through the formation of a cooperative (45 men) salt works.

Kerege's installation was the property of a Greek farmer until 1968. It was purchased by the Government of Tanzania, which transferred it to the registered village of Kerege. The initial group of 250 families was subsequently joined by 163 families. Most families did not originate in the immediate area and few of them are related. In the intervening period, the dairy herd has decreased from 55 to 2 cows, and much of the equipment has become inoperative.

2. Ecological

The dispersion of compounds and the citing of village resources (rice, fishing, house sites, etc.) would appear to maximize the natural opportunities afforded by the area. The rice is grown in a flat area approximately 6 km in diameter.

Chengeni salt works are located by a natural estuary north of Bagamoyo toward the ocean side of a similar salt works maintained by a European. Most of the Chengeni co-op members of young men were trained by him. A small ocean inlet serves the salt works and higher tides occur twice monthly. Sluice gates are adjusted accordingly through the active period of salt making, which coincides with the dry season.

Kerege crops (maize, rice and cassava, cashew and sesame, vegetables--beans, peas, tomatoes, and okra) and tree crops of orange, tangerines, and papaya are all suitable for the coastal zone. As noted above, cattle are not common in the coastal area, and there may be a shortage of palatable forage throughout the year without carefully managed substitutes.

3. Social

The Zaramo are a patrilineal, patrilocal, polygamous group organized in loose patrilineages. Each wife's children inherit according to their mother's share at the time of the father's death. Women, singing work songs, are accustomed to coordinate some of the gardening and other work tasks with their relatives and neighbors.

Compounds accommodate extended families with several houses joined by a palm frond fence. Within the compound are a pit latrine, kitchens, a number of small peak-roofed boxes set on poles for chickens, and usually one or more mango trees for shade.

IV. Energy Requirements

The need for potable water in Kimbiji, and Chengeni especially, was marked. Chengeni must haul all drinking water from Bagamoyo town for their consumption of 7 drums each week. Kimbiji has a brackish water supply--more pronounced during certain times of the year. Firewood is in moderately short supply--though the needs are probably less marked than in some other parts of Tanzania. Solar driers might well meet the need for more rapid food preservation.

APPENDIX K

REGIONAL VARIATION IN ENERGY SUPPLY AND DEMAND
- Priscilla Reining

The Tanzanian National Scientific Research Council divides mainland Tanzania into the following seven zones: (1) Coastal, (2) Central, (3) Western, (4) Southern Highlands, (5) Southern, (6) Lake, and (7) Northern.

The heterogeneity in natural resources, indigenous culture, and population distribution makes even a summary review of the more prominent or obvious sources of renewable energy supply and the chief areas of demand in the rural areas not only appropriate, but quite necessary if the technical possibilities are to be matched both to supply and to demand.

For each of the seven zones, information is presented according to the following outline.

1. The principal bases of subsistence and marketing in the rural sector.

2. The type of energy now used in the cultivation cycle for different cropping systems identified by these symbols: H = Human, M = Mechanical, A = Animal, T = Tractor, and S = Direct solar drying.

3. The presence or absence of animals is noted, since their management places demand on the time budget of their owners as well as indicating a potential source of energy as draft animals (donkeys, oxen), or fuel (dung).

4. Fishing also requires time and labor, and may benefit especially from solar dryers and/or sources of refrigeration.

5. Crafts: pottery, blacksmithing, charcoal making, and construction require fuel supplies which are competitive with domestic requirement.

6. Population density and type of indigenous and recent settlement pattern is vital to determining feasibility of the several devices.

7. Supply of renewable energy sources, e.g., sun, wind, flowing water, human and animal wastes and crop residues, and, finally, type of seasonality in the annual cycle, whether single rainy/dry or double rainy/dry season.

This summary review is designated to indicate those areas which are now and can be expected to make continuing demands on human energy. However, alternatives to human transport of water and firewood from their sources would alter the present human energy budget in significant ways.

The information presented in this appendix is derived from the panelists' experience and knowledge and from information presented in Tanzania in Maps, Leonard Berry, ed., University of London Press, Ltd. (1971).

I. Coastal Zone: Tanzania, Coast, (Dar es Salaam), Lindi, Mtwara, Morogoro

1. Subsistence and market crops and processing.

2. Type of energy (see symbols below table):

		Clearing Shifting Cultivation	Planting	Weeding	Harvesting	Processing Grinding Maize	Storing
Women	Gardening (Hand) Maize, Cassava, Potatoes, Millet	H	H	H	H	H&M	H
Men	Agriculture (Plow) Rice, (machine cultivation)	H & T	T	H	H&T	M	H
Women and Men	Tree Crops Pawpaw, Coconut, Mango, Cashew, Banana					Cash M	

H = Human A = Animal S = Direct solar drying
M = Mechanical T = Tractor

3. Animals: Except for Tanga Region and the immediate coastal area in Bagamoyo, cattle are absent; some small stock are kept, but these are not common throughout the zone.

4. Coastal fishing is common both for subsistence and the market. Dams and fish ponds are common in Tanga and Bagamoyo Regions.

5. Crafts: charcoal making is important; pottery making and blacksmithing are practiced.

6. Population density in Tanga, near Morogoro, and in the vicinity of Dar es Salaam and Mtwara is medium to high (30 - 99 per square kilometer [pskm]; in most of the remainder of the zone, population is the lowest in Tanzania--0-4 pskm). Settlement pattern is traditionally compact, in the Swahili style, and dispersed elsewhere.

7. Supply:

Sun: Dar es Salaam has 2,800 hours of sunshine per year.

Wind: Along the coast, night wind speeds of 16 knots are common and day wind speeds of 21 knots are not infrequent.

Flowing water: The East African plateau fall line characterizes the western border and fainfall is in the 1,000 - 14,000 mm level, which strongly suggests numerous possibilities for mini-hydro as well as the major hydroelectric projects such as Kidatu. The northern part of the zone has double rainy/dry seasons and the southern a single rainy/dry cycle. Except as noted, the zone received median rainfall of 800 - 1,000 mm. Animal wastes are in poor supply, and the settlement pattern does not favor the collection of human wastes.

8. Demand is for firewood and water pumping and, secondarily, for food processing.

II. Central Zone: Dodoma, Singida

1. Subsistence and market crops.

2. Type of energy (see symbols below table):

		Clearing for Shifting Cultivation	Planting	Weeding	Harvesting	Processing, Grinding	Storing
Women	Gardening Millet, Maize, Groundnuts	H	H	H	H	H&M	
Men	Agriculture (Plow (of minor importance)						
Women and Men	Tree Crops Citrus, (Grapes)		H	H	H		

H = Human M = Mechanical

Many changes are taking place in Dodoma with the plans and preparations of the Capital Development Authority.

3. Livestock are important in the economy; herding is combined with shifting cultivation of grain crops.

4. Fishing is confined to fish ponds in the Dodoma area.

5. Crafts are of reduced importance.

6. The settlement pattern has consisted of dispersed homesteads with cattle.

7. The zone is the driest in Tanzania and has been subject to drought. The rainfall in Dodoma, below 600 mm; 3,000 hours of sunshine annually; Singida also has substantial sunshine. There is a single, long dry season.

8. The demand for firewood and charcoal is of critical imprtance. Water supplies, especially at the end of the dry season, are also in short supply.

III. Western Zone: Tabora, Kigoma, Rukwa

1. Subsistence and market crops and processing.

2. Type of energy (see symbols below table):

		Clearing, Tilling	Planting	Weeding	Harvesting	Processing	Storing	Additional
Women	Gardening (Hand) Millet, Rice, Cassava, Onions, Maize, Vegetables	H	H	H	H	S	J	
Men	Agriculture Maize, Tobacco, Cotton	H, A	H,M	H	H,A	H	H	In Tabora, 80 percent of the income is from tobacco sales
Women & Men	Tree Crops Mango	H	H	H	H	H	H	

H = Human A = Animal S = Direct solar drying M = Mechanical

3. Animals. Oxen are very important as draft animals for tobacco cultivation, and 75 percent of Tabora families have oxen and plows.

4. Fishing in Lake Tanganyika provides 22,500 tons annually. The catch is dried in the sun or over charcoal.

5. Lumbering with machine saws, blacksmithing, pottery making, and firing wood for charcoal all make demands on forestry supplies. However, firewood is not seen as a problem.

6. Except in the vicinity of Kigoma, population density is low, between 0 and 4 psm, and the settlement pattern is dispersed; settlement pattern and density are responsive to the presence of tsetse fly.

7. Rainfall is between 800 and 1,000 mm and occurs during a single rainy season. Forest and bush are common.

8. The chief demand is for the pumping of water. However, in Tabora, fuel supplies for the curing of tobacco are also in demand.

IV. Southern Highlands: Iringa, Mbeya, Njombe

1. Subsistence and market crops and processing.

2. Types of energy (see symbols below table):

		Clearing	Planting	Weeding	Harvesting	Processing	Storing	Additional
Women	Gardening (Hand) Maize, Cassava, Beans, Potatoes, Tobacco, Pyrethrum	H	H	H	H	S,F	H	
Men	Agriculture: Wheat, Maize, Tobacco	T	H	T	H	S,F	H	
Women and Men	Tree Crops Tea, Coffee, Bananas	C		H	H	F	Sell	
Men	Irrigation Rice (Paddy)	H	H	H	H			

H = Human S = Direct solar drying F = Firewood
T = Tractor C = Continuous

3. Animals. Cattle are commonly kept along with small stock in mixed husbandry regimes.

4. Dams and fish ponds are common in the comparatively well-watered Iringa and Mbeya districts.

5. The crafts of blacksmithing and pottery are practices.

6. Although portions of the zone (Chunya for example) are lightly populated, Mbeya, Iringa, and Tukuyu are all populated in the 50 - 90 pskm range. In Tukuyu the settlements are compact; in other parts the pattern consists of dispersed settlements. Recent regrouping has taken place in the newly registered villages, where tobacco is becoming more important.

7. Rainfall of 2,000 mm is concentrated in a single, long rainy season. Altitude moderates evaporation. Possibilities for mini-hydro installations would appear to be excellent. Sunshine hours are reduced by frequent cloud cover and may not average more than 1,500 hours annually. There are known coal deposits.

8. Demand is for space heating and lighting, in addition to cooking fuel, which can be in short supply locally.

V. Southern Zone

1. Subsistence and market crops and processing.

2. Types of energy (see symbols below table):

		Clearing	Planting	Weeding	Harvesting	Processing	Storing	Additional
Women	Gardening (Hand) Maize (Paddy), Tobacco, Groundnuts	H	H	H	H	S, F	H	
Men	Agriculture Maize, Tobacco	H	H	H	H		H	need fuel
Women and Men	Tree Crops Citrus	H	H	H	H		H	

H = Human F = Firewood S = Direct solar drying

3. Due to fly infestation there are very few domestic animals, and the overall crop productivity is low.

4. Fishing is accommodated in ponds and dams with concentrations both in Songea and Tunduru.

5. Crafts are dominated by pottery making.

6. The overall population density is low, below 14 pskm, but the settlement pattern consists of compact villages.

7. Rainfall is in the 1,000 - 1,400 mm range; it occurs in a December-April rainy season.

Coal. There are identified coal reserves.

8. Demand is for heating and lighting, as well as for cooking fuel. (The coal is not exploited for local domestic needs.)

VI. Lake Zone Mwanza, Bukoba Shinyanga

1. Subsistence and market crops and processing.

2. Type of energy (see symbols below table):

		Clearing	Planting	Weeding	Harvesting	Processing	Storing	Additional
Women	Gardening Beans, Bambara, Maize, Nuts, Cotton	H	H	H	H	S,F	H	
Men	Agriculture Cotton	T	H	T	H	S,F	H	
Women and Men	Tree Crops Coffee, Tea, Bananas	C		H	H	F	Sell	

Mwanza District inhabitants cultivate annual crops on an intensive basis in a mixed husbandry regime. Bukobi inhabitants combine tree cropping with annual crops and cattle keeping. In Shinyanga and Maswa are the most dense, large herds of cattle in sub-Saharan Africa.

H = Human A = Animal S = Direct solar drying C = Continuous

3. Cattle and small stock. Exceptionally large herds of cattle are systematically maintained in Shinyanga and Maswa. Goats and sheep are also held.

4. Fishing in Lake Victoria accounts for 40,000 tons annually and fish ponds also occur in inland water sources. Part of the catch is marketed and part consumed on a subsistence basis.

5. Crafts of blacksmithing, pottery, and lumbering are all practiced and require fuel supplies.

6. Overall population density is the highest in Tanzania, even though distribution is not uniform varying from 220 pksm on Ukerewe to no more than 4 pskm in Kahama. In Mwanza, villages consist of compound clusters surrounding granitic outcrops. In Bukoba, villages are compact, with a density of 500 pskm. In some other parts, dispersed compounds are usual.

7. Rainfall patterns between 1,000 - 2,000 mm characterize the zone occurring in a double rainy/dry season. Musoma has 99 rain days, Mwanza 105, and Bukoba 162 on the average, with a corresponding increase or reduction of sunshine. There are hydroelectric possibilities. The sizeable herds and compact villages suggest biogas generation possibilities.

8. Energy demand is for space heating, cooking and crop drying.

VII. Northern Zone: Kilimanjaro, Arusha, Mara

1. Subsistence and market crops and processing.

2. Types of energy (see symbols below the table following):

		Cleaning	Planting	Weeding	Harvesting	Processing	Storing	Additional
Women	Gardening (Hand) Maize (Paddy), Beans	H	H	H	H	H	H	
Men	Agriculture (Machine) Wheat, Maize	T	M	M	M	M	M	
Women and Men	Tree Crops Coffee, Bananas	C		H	M	M		

Kilimanjaro and Arusha are high-density and northern zone grasslands carry large herds of wildlife as well as cattle. Mechanized cropping of wheat is now common in certain areas.

3. Animals are stall fed on Kilimanjaro and herded in a transhumant pattern on the grasslands. Small stock is also kept.

4. Some fishing is done in dams in the highland areas, but it is not a prominent part of the economy.

5. The shortage of firewood hampers the extensive utilization of traditional crafts while modernization has supplanted the demand for their products.

6. Population density on the slopes of the mountains is high (150 - 221 pskm) and low (0 - 4 pskm) on the grasslands and the settlement pattern ranges from continuous habitation to compact settlements of herders.

7. Rainfall and the melting of snow on Kilimanjaro would make mini-hydro an important possibility. The Arusha-Moshi area is now serviced by

the Kidatu hydroelectric scheme. Elsewhere the much lower rainfall in the grassland is consistent with higher rates of sunshine.

8. The chief demand is for domestic fuel supplies in the densely populated area where firewood is in very short supply and fuel is used for heating as well as cooking.

APPENDIX L

A TECHNICAL COMMENT ON THE PRODUCTION AND EFFICIENT USE OF FIREWOOD

-- Priscilla Reining and Adolfo Mascarenhas

Domestic fuel requirements and fuel for crop drying, making pottery and other such rural uses make necessary accurate estimates of demand for firewood. The supply of wood is extremely important for two reasons. As has been noted above (III .15) domestic fuel accounts for 80% of extra-muscular energy used in Tanzania today. For most practical purposes rural energy needs today are met with wood. The second reason is the environmental degradation which is attributed to the gap, estimated at 18,000,000 m^3/yr, between supply and demand. The deficit and its environmental corollary are especially marked in semi-arid areas where trees and bushes grow slowly. For purposes of clarifying the estimates in relation to the production of wood the following definitions of standing biomass, primary productivity, net primary productivity and yield are reproduced from the "Working Paper on Indicators" (American Association for the Advancement of Science, 1977). The fraction of forest growth which may be used without damage to forest resources is yield.

Standing Biomass. The amount of organic matter present at a given time. It is possible to estimate, or at least to extrapolate, standing biomass using surface data plus satellite multispectral data. While reduction in standing biomass may be the result of seasonal changes in vegetation, it also may be

a result of overgrazing, fire, declining water tables, or other causes. Desertification may enhance these causes and contribute to the long-term reduction of biomass.

Primary Productivity. The rate at which organic material is created by photosynthesis. Primary productivity is limited by such factors as availability of light, soil nutrients, and water. Water is of course critical in arid and semi-arid environments. Not only is water used during photosynthesis (in the chemical reaction when carbon dioxide is fixed into sugar that serves as the basis for other organic compounds), but water is necessarily lost from moist cell surfaces in leaves and green stems because surface pores must be kept open so that carbon dioxide from the air can be absorbed. Some desert plants have evolved a chemical means of storing CO_2 absorbed at night and thus can keep the pores closed during the day, but these plants are very slow-growing--sometimes only millimeters per year--and no crop plants fall into this category.

Net Primary Productivity. The amount of CO_2 incorporated into organic material in plants in excess of the organic material used by the plant for its own metabolic needs. For desert scrubland throughout the world this ranges from 10 to 250 $g/m^2/yr$ (dry weight), with a world average of 70 $g/m^2/yr$.

Yield (harvest). That fraction of net productivity that it is feasible to remove without destroying the basis of the productivity. The word "productivity" is often used to mean "yield," and readers should be aware of how ecologists distinguish the two terms. Note that yield is always lower than net productivity. Yields are, at most, 30% of net productivity in the case of cereals and wood.

To reduce the estimated deficit in fuel wood yield there are several possible alternatives: (1) afforestation programs, (2) design and distribution of more efficient stoves, and (3) design and distribution of new devices utilizing other renewable resources for cooking, crop drying, and kiln firing.

Afforestation Program. The current plans on afforestion should be implemented seriously, especially at the village level. This will ensure that the supply of wood fuel is not depleted. It is recommended that every village establish a wood/forest plot for wood fuel. The goal should be, 75 ha of consolidated forest per village.

Stoves. While the supply of wood fuel is increased, measures should be taken to improve wood fuel cooking stoves to make them more efficient and use less wood fuel. This is especially important for charcoal stoves, which are mainly used in urban areas. Since the charcoal is produced in rural areas, a more efficient use of charcoal will ease demand and reduce the pressure on forests. The use of clay stoves should be investigated.

Crop Storage. Storage of farm produce requires improvement and the use of insecticides must continue. In the case of perishables, especially meat and fish, drying methods should be improved instead of relying on direct solar drying. At the household level, the introduction of solar driers may be still remote but should be given serious consideration. Wood fuel driers should be investigated and, if possible, be introduced.

APPENDIX M

CLOSING REMARKS
-- Peter Mwombela

Fellow Workshop Participants, Ladies and Gentlemen, we have now come to the end of our workshop, but only to the beginning of the tasks ahead. In the first two days we had the opportunity to have an overview of the development of solar energy technologies at the international level. This opportunity has enabled us to realize that the use of solar energy technologies is a reality and not a dream, as people apparently seem to believe. The experiences gained in the U.S.A., Europe, China, and other parts of the world, which have been demonstrated in the seminar, were very inspiring to us all.

I would first like to take this opportunity to express our most sincere gratitude to our colleagues from North America (U.S.A. and Canada) and particularly to the U.S. National Academy of Sciences for having made available these experts who have made a very significant contribution in sharing their knowledge and experience with us in this important field. I have no doubt in my mind that our fellow colleagues from Tanzania have found this opportunity both an enrichment to their technical know-how and challenging during the consideration of its application in Tanzania. I also believe that our colleagues from North America have had something to take from this seminar/workshop, at least

an insight into the type of problems encountered by Third World countries like Tanzania.

This is the first attempt in which the NAS and the Tanzanian National Scientific Research Council have jointly organized an activity of mutual interest. This should be a beginning and not an end of such collaboration. We should look forward to future collaboration not only between these two institutions, but also with organizations of similar interest with NAS so that, in our joint ventures, we may be in better position to tackle the serious technical problems that face us in Tanzania. It is therefore very important that the recommendations and projects that are the results of this workshop ending today are followed up with vigor and commitment so that we may look forward to seeing the application of these technologies both in those villages we have visited and in others where these technologies both in those villages we have visited and in others where these technologies are appropriate. This will be in line with the Government and Party policy which aims to improve the conditions of the masses living in villages, so that their lives may be more enjoyable and fulfilling.

It was obvious throughout the five-day workshop that there is a great need for gathering relevant data necessary for planning and implementation of these technologies, e.g., data on availability of direct sunshine, rainfall, wind, etc. I also realized that the methodology to be adopted before the application of these technologies is very important. Nonetheless, even under present conditions where adequate data is not available, it was observed that certain technologies which could be put to use on a small scale, can immediately be applied. It is to the interest of the Tanzania National Scientific Research Council to see to it that whatever can be applied to the villages, a follow-up action

should be immediately taken. In this connection, I would like to appeal to the NAS, the University of Dar es Salaam, and the Ministry of Water, Energy and Minerals to make available both the human and financial resources required for the implementation of these projects. As you will recall, the villages we had visited have some expectation, and it is therefore important that we mobilize all our energies and resources to make their expectations a reality. It is only when we can demonstrate our commitment to solving their problems that the villagers will, in future, have more confidence and pride in their technicians. This is consistent with the call made by our Honorable Prime Minister, who has directed that experts and technicians spend most of their time with villagers so that solutions could be found to solve their problems.

This is not the time to make a lengthy speech. I would like to end by first paying a special tribute to all participants who have shown keen interest in the proceedings of this seminar/workshop. I feel very gratified to state this is the first seminar/workshop in which I have found almost 100 percent attendance. This is indicative of your devoted interest in solar energy technologies, and we from the Tanzania National Scientific Research Council will take all necessary steps to see that this interest is kept alive and transformed into real activities.

I am sure you also wish me, on your behalf, to thank the Building Research Unit and particularly the Institute for Finance Management who have provided excellent facilities for our seminar/workshop. Last, but not least, I would like to thank our supporting staff-typists, drivers, etc.; without them our activities would not have been possible.

Finally, I would like to apologize to our visitors for having kept them so busy that they had no time to relax and make use of some of our attractive

beaches and game reserves--not to mention sunshine, which is plentiful here on the coast. This means that our visitors should be encouraged to come back again to see what they have missed. We hope, therefore, to have another opportunity to welcome you here in a more humane and relaxing mood than we have done this time. Please remember, if you ever manage to come again, don't plan to leave immediately after the official engagements because it does not permit us to show you what we would have liked to do outside the conference room.

With these remarks, I wish to thank you all for your indulgence in listening to me and wish our visitors a safe and enjoyable journey home. We look forward to seeing you in the not too distant future. Kwa herini!