AGENCY FOR INTERNATIONAL DEVELOPMENT
WASHINGTON, D. C. 20523

BIBLIOGRAPHIC INPUT SHEET

FOR AID USE ONLY
Batch 80

1. SUBJECT CLASSIFICATION

A. PRIMARY: Development and economics — DP00-0000-0000

B. SECONDARY: Transportation

2. TITLE AND SUBTITLE

Highway and bridge construction manual

3. AUTHOR(S)

(101) Jorgensen (Roy) Assoc.,Inc.,Gaithersburg,Md.

4. DOCUMENT DATE: 1975

5. NUMBER OF PAGES: ~~200p.~~ 205p.

6. ARC NUMBER: ARC 625.7.J82a

7. REFERENCE ORGANIZATION NAME AND ADDRESS

Jorgensen

8. SUPPLEMENTARY NOTES (Sponsoring Organization, Publishers, Availability)

9. ABSTRACT

10. CONTROL NUMBER: PN-AAF-357

11. PRICE OF DOCUMENT

12. DESCRIPTORS

Bridges
Construction
Engineering
Highway planning
Highways
Manuals
Professional personnel

13. PROJECT NUMBER

14. CONTRACT NUMBER: AID/otr-C-1420

15. TYPE OF DOCUMENT

AID 590-1 (4-74)

HIGHWAY and BRIDGE CONSTRUCTION MANUAL

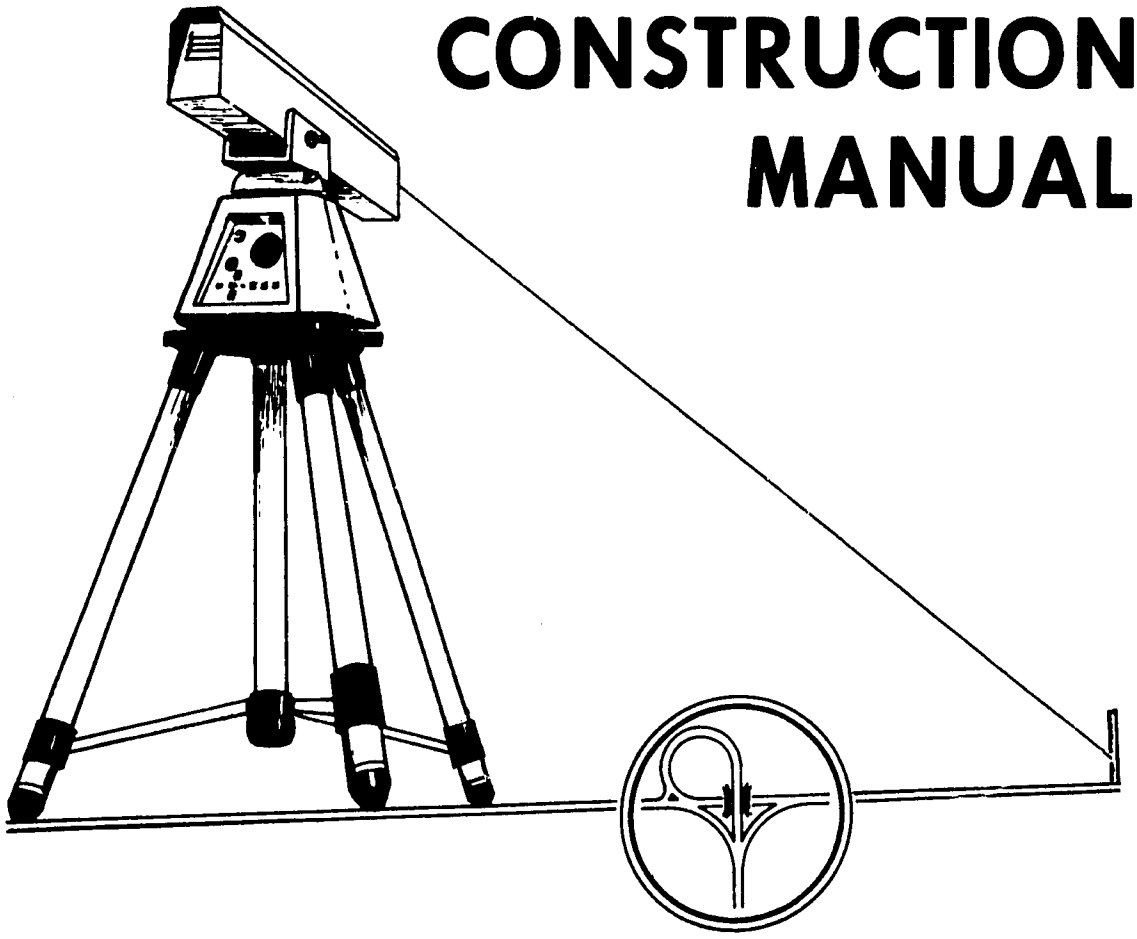

Prepared by

ROY JORGENSEN ASSOCIATES, INC.
Gaithersburg Maryland 20760

for

UNITED STATES AGENCY FOR INTERNATIONAL DEVELOPMENT

Project Number - Highway Manual AID/OTr C-1420

ACKNOWLEDGEMENT

In compiling this Construction Manual, information has been utilized and incorporated from various sources. Roy Jorgensen Associates, Inc. wishes to gratefully acknowledge the following sources of information.

- American Association of State Highway Officials and its many texts relating to highway and bridge construction,
- The Asphalt Institute ,
- And the Highway Engineers employed by the United States Agency for International Development for their outstanding help in reviewing and editing this Manual.

Financial assistance to compile and publish this Manual was provided by the United States Agency for International Development.

FOREWORD

This Construction Manual is one of a series of five publications prepared under the auspices of the United States Agency for International Development to provide guidance and assistance to highway agencies in other countries. The other publications are:

- Standard Specifications for Highways and Bridges,
- Design Manual,
- Planning Manual, and
- Accounting Manual.

Although these publications reflect the best of current known practice, they are intended principally as models from which individual agencies might develop specifications, manuals and procedures to fit their own unique needs.

This Construction Manual is directed primarily to highway agency personnel who are responsible for supervision and inspection of contract projects for highway and bridge construction. The principal objectives are:

1. To provide basic orientation and understanding of contract construction practices and responsibilities.
2. To document policies and procedures with regard to standardized inspection procedures and reports.
3. To define criteria to guide judgments and decisions by construction personnel.
4. To describe the most effective techniques and procedures, and to present reporting systems, tables and other information valuable to the Engineer and Inspector on construction projects.

This Construction Manual consists of five parts:

Chapter I	-	Organization and Responsibilities
Chapter II	-	General Provisions
Chapter III	-	Roadway Construction
Chapter IV	-	Bridge Construction
Chapter V	-	Records and Reports

The Manual should not be considered a complete and comprehensive Construction Manual -- rather it is a first step toward orderly documentation of policies, procedures, instructions and a guide toward better management.

INDEX

Acknowledgment i

Foreword ii

CHAPTER I - ORGANIZATION AND RESPONSIBILITIES 1
- Headquarters Construction Division 3
- District Operations 5
- Field Organization 10
- Public Relations 11

CHAPTER II - GENERAL PROVISIONS 15
- Specifications 15
  - Standard Specifications 16
  - Supplemental Specifications 16
  - Special Provisions 16
  - Governing Order 17
- Highway Plans 17
- Bridge Plans 21
- Construction Staking 26
  - Staking of Roadways 27
  - Bridge Layouts 30
- Highway Terms and Definitions 36

CHAPTER III - ROADWAY CONSTRUCTION
- General Responsibilities 59
  - Preconstruction Conferences 59
  - Approach to Inspection 61
  - Check list 62
- Earthwork 63
- Roadway Excavation 64
  - Slopes 64
  - Slides 64

Hauling of Materials 65
Unsuitable Material 65
Blasting 66
Embankments 67
Embankment Foundation 67
Embankment Construction 69
Compaction 71
Optimum Moisture 72
Rock Embankment 73
Embankment Over Swampy Areas 74
Embankment at Structures 75
Balancing Earthwork Quantities 76
Surplus Material 77
Deficiency of Material 78
Culverts 78
Excavation for Culverts 79
Foundation 80
Camber 80
Backfill 80
Protection during Construction 81
Pavements 81
Types of Pavement 82
Types of Bituminous Material 83
Preparing Asphalt Mixtures 85
Bitumen Content Determination 86
Estimating Material Requirements 87
Test Strips 88
Penetration Macadam 89
Road Mix Pavement 91
Plant Mix 91

CHAPTER IV - BRIDGE CONSTRUCTION 93
Reinforcing Steel 93
Inspection Prior to Placing 96
Inspection During Placement 96
Splicing 98

Welding 98
Pile Driving 99
Safety 99
Use of Survey Sheet 102
Pile Definition 103
Types of Support 103
Types of Pile 105
Test Piles 107
Penetration 107
Jetting 107
Preboring 108
Pile Driving Equipment 108
Inspection 113
Concrete Design 113
Aggregate Blending 114
Coarse Aggregate Blending Chart 115
Fineness Modulus Method of Blending 117
Stockpiling Aggregates 119
Consistency of Concrete Mixes 119

CHAPTER V - RECORDS AND REPORTS 123
Types of Reports 124
Daily Reporting 124
Bi-weekly Reporting 126
Non-recurring Reports 126
Report Processing 126
Field Books 128
Example Reports and Records 142

TABLES AND CONVERSION CHARTS 187

CHAPTER I

ORGANIZATION AND RESPONSIBILITIES

The purpose of this Manual is to define the organization, responsibilities and procedures for a highway agency to perform supervision and management of contract construction of roads and bridges.

Because this is intended as a "model" manual, there may be need for individual highway agencies to modify and adapt the Manual to their own particular conditions and needs. The discussions assume a "typical" organizational structure as shown in the following diagram, and define three basic levels of organizational responsibilities:

- Headquarters Construction Division,
- District Engineers, and
- Field organization responsible to the District Engineers.

Although this probably is the most common type of organization, other types of organizational framework may work equally as well.

These discussions are limited to those functions related to road and bridge construction even though an organizational level may have other responsibilities such as design, maintenance, equipment shops, etc. No attempt is made to identify the number of personnel required at each level. This can be established only after the workload has been defined.

TYPICAL ORGANIZATION FOR HIGHWAY CONSTRUCTION FUNCTION

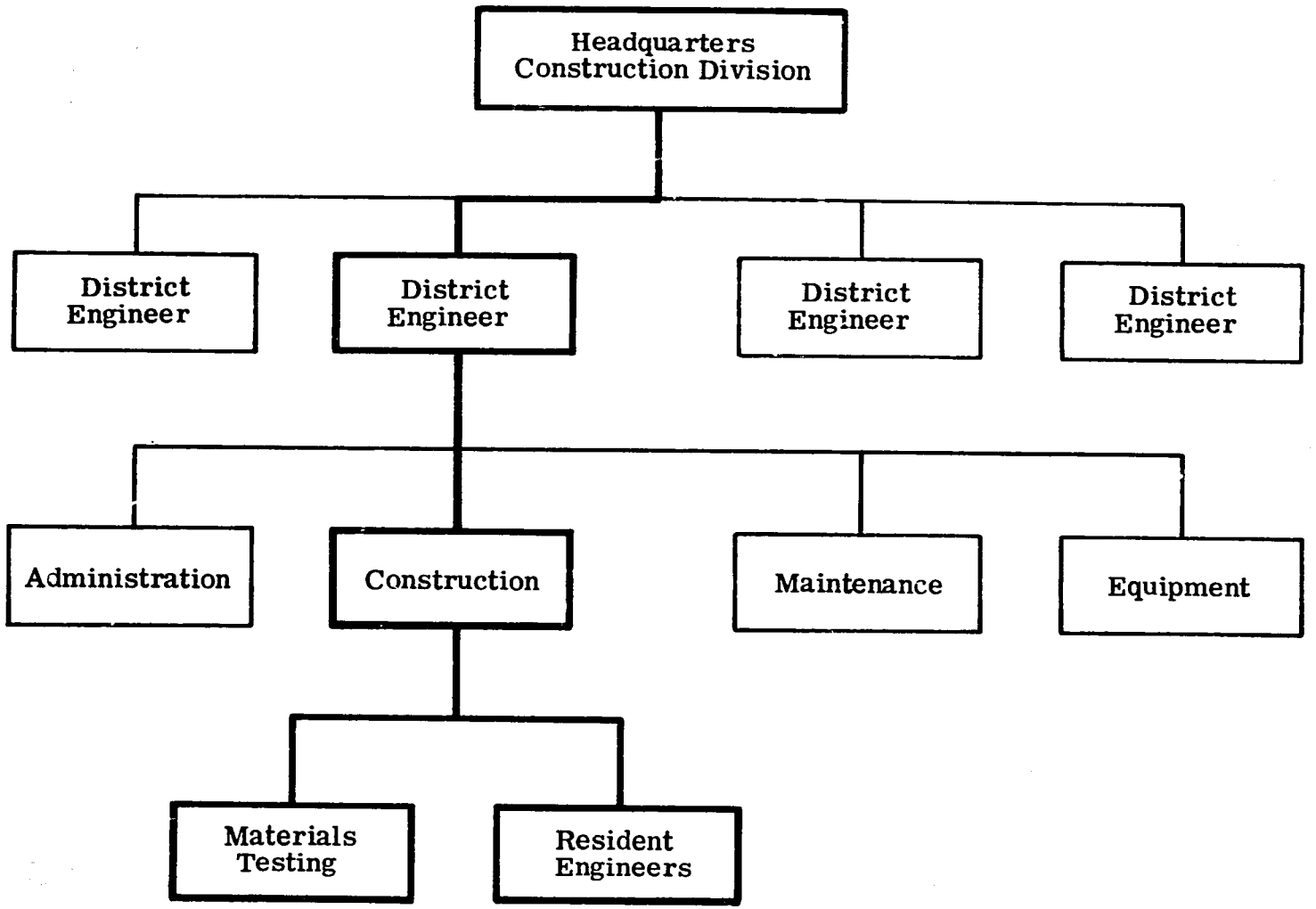

HEADQUARTERS CONSTRUCTION DIVISION

The Construction Division is headed by a Division Chief and staffed with engineers, technicians and clerical personnel as needed. The principal functions are to provide:

- Technical support for field personnel, and
- Project control of the construction program.

Technical Support

Objective:

To provide technical advice, assistance and guidance in the preparation of construction project plans and contracts involved in implementation of highway construction projects.

Responsibilities:

a. Develop a Construction Manual that details policies and procedures pertaining to highway construction operations.

b. Obtain uniform understanding among District personnel of new construction techniques and construction methods outlined in the Construction Manual through periodic visitations, meetings and directives.

c. Furnish consulting and coordination services for field operational problems and office inquiries regarding construction projects.

d. Perform continuous study of methods and equipment to promote improved methods of highway construction.

e. Recommend improvements in construction specifications and design standards.

f. Provide personnel to participate in the prequalification of contractors.

g. Review contract plans and specifications in cooperation with the Road Design and Bridge Design Divisions.

h. Assist in identifying areas of training needed for construction personnel.

i. Evaluate contractors capabilities and establish a record of their performance.

Project Control

Objective:

To ensure that construction activities comply with the plans and specifications and to provide complete documentation to verify the compliance.

Responsibilities:

a. Inspection of construction activities to monitor compliance with established construction procedures.

b. Establish a detailed construction record system and audit the use thereof for all contract work.

c. Record and process all change orders.

d. Monitor progress and final estimates for payment to contractors.

e. Investigate contractor claims for additional compensation and make recommendations.

f. Receive field information from Districts and prepare progress reports.

g. Participate in acceptance of completed work.

DISTRICT OPERATIONS

General

Objective:

To construct, maintain and operate the highway system and all other highway facilities within the District in an efficient manner within the policies, procedures, and guidelines established by top management.

Responsibilities:

a. Act as the official representative of the Department in all matters relating to the highway within the District.

b. Direct and coordinate all activities and operations within the District.

c. Maintain good working relations and contacts with divisions at Central Headquarters.

d. Provide budgets, reports and other information when requested.

e. Maintain proper staffing patterns consistent with manpower authorizations.

f. Inspection and acceptance of completed contract or force account work.

Construction

Objective:

To ensure that proper engineering work is carried out in the construction of road and bridge projects.

Responsibilities:

a. Support the District Maintenance Engineer in all activities where inspection is required.

b. Prepare documents for payment estimates for work performed by contract.

c. Perform the necessary inspection on all projects to assure the contractor's operation meets the contract requirements.

d. Prepare and submit required progress reports on construction projects.

e. Secure samples and perform preliminary materials testing as directed by the Materials Division.

f. Prepare the necessary reports on the preliminary materials testing.

g. Perform sampling and testing of materials used on construction projects.

h. Prepare the necessary reports on the results of materials tests.

i. Perform sampling and testing of maintenance materials when requested.

j. Supervise and perform work on construction projects as directed by the Construction Division.

k. Perform all staking for any construction project.

l. Perform all surveying for preconstruction activities.

Geology Research (District or Headquarters)

Objective:

To provide technical analysis, evaluation, advice, assistance and guidance relative to soils and aggregates pertinent to construction.

Responsibilities:

a. Conduct subsoil and foundation investigations for highway and bridge construction.

b. Make recommendations to Design and Construction Divisions regarding soil materials to be used in construction.

c. Direct geological investigation for materials inventory including sampling, classifying, maintaining and up-grading in-country geology information relative to material sources.

Laboratory Testing (District and/or Headquarters)

Objective:

To conduct tests on material samples of construction projects to ensure adequate quality control.

Responsibilities:

a. Perform chemical and/or physical analysis of materials purchased or used under specifications.

b. Perform laboratory analysis of field samples using proper sampling techniques as outlined in the Specifications Manual.

c. Perform other related testing procedures as assigned.

d. Perform tests on materials to determine their physical properties.

e. Determine physical properties of aggregates for use in concrete and bituminous pavement design.

Materials Research (District or Headquarters)

Objective:

To conduct tests on materials to determine proper standards and quantities of materials.

Responsibilities:

a. Perform analysis of combinations of basic ingredients to establish proper proportions.

b. Perform all field tests relating to materials used in construction for quality control of concrete work, bituminous surface course, etc.

Administration

Objective:

To implement and support the general administration sub-functions of the District in accordance with the prescribed policies and procedures of the accounting, general administration, personnel and training functions.

Responsibilities:

a. Recruitment and selection of District personnel as delegated by the Personnel and Training Division.

b. Determine District manpower requirements.

c. Administer District training programs.

d. Orientation, intra-district transfers, and maintenance of records of district employees.

e. Maintain filing system and typing pool.

f. Operate District communication center.

g. Process distribution vouchers and field purchase orders.

h. Maintain obligation voucher ledger.

i. Maintain cost ledgers for maintenance, construction, design and administrative activities in the district.

j. Process tolls and fees collected on toll bridges, highways and ferries.

k. Process equipment use reports and payrolls and maintain an employee pay system.

l. Provide support to other district functions in preparation of annual budget.

FIELD ORGANIZATION

The field organization consists of the Resident Engineers and their assigned technicians responsible for direct supervision and inspection of ongoing construction projects.

Composition

The size and composition of the field organization is determined by the size of the construction program and by the size and complexity of individual projects. A Resident Engineer is in charge of each project. Sometimes he supervises several projects at the same time when they are in close proximity.

Each Resident Engineer is assigned technical assistants as needed -- including a survey party, inspectors and a materials man.

Responsibilities

The principal responsibilities of the Resident Engineer and his staff are to:

a. Provide adequate construction stakes.

b. Interpret and explain Plans, Special Provisions, and the General Specifications to the Contractor.

c. Inspect materials and construction methods for quality and conformance with Plans, Specifications, and Special Provisions.

d. Measure, compute quantities, and prepare estimates for payment to the Contractor.

e. Continually check the project to insure the safety of job personnel and the general public, including pedestrian and vehicular traffic.

f. Keep a comprehensive "Project Diary" in ink.

g. Prepare "as built" plans.

PUBLIC RELATIONS

Public relations are divided into five categories: (1) internal relations within Highway Administration, (2) relations with the Contractor personnel, (3) relations with utilities and other public agencies, (4) relations with abutting property owners, and (5) relations with the general public.

Internal Relations

Maintenance of good relations between Division personnel is largely a matter of adequate communication and a clear division of responsibility. Employees must know precisely what their responsibilities are and they must be given the authority to handle these responsibilities.

For project personnel, the most important communications are between themselves and the Resident Engineer. It is strongly recommended that Resident Engineers hold short staff meetings each week. At these meetings, the Resident Engineer should brief his assistants on the operations for the week, announce any changes or new assignement of responsibility, and discuss any other subjects which are pertinent. These meetings should be held Monday morning, if possible.

Communication is a two-way responsibility. Good management practice requires that supervisors keep their personnel informed, through proper channels. An important phase of internal relations is the necessity for working with other departments within the organization. If there is a difference of opinion on some part of the project, whether it is design, handling traffic, or some other feature, the Resident Engineer should approach the other party with an open mind and discuss the problem with him. An understanding of how the departments fit into the organization is important.

Relations With The Contractor

In communicating with the Contractor and his personnel it is important that the Engineer make his position clear right from the start. It is far better to get started on a basis of administering the contract firmly in accordance with the plans and specifications than it is to correct a situation caused by laxity, later on in the life of the contract. The employees assigned to construction must have a thorough knowledge of the plans and specifications governing the contract.

Clear evidence of possession of this knowledge will go a long way in promoting smooth relations with the Contractor's personnel. In other words, if the Resident Engineer and his assistants know the plans and specifications thoroughly, the Contractor's personnel will respect the Engineer's judgment in cases where interpretation of the specifications and instructions becomes necessary. An important result of smooth relations between the Resident Engineer and the Contractor's superintendent is the satisfactory relationship between the Highway Administration and the Contractor at all levels.

Relations With Utilities And Other Public Agencies

Good public relations will have a beneficial effect in dealing with utility companies and other public agencies. The Resident Engineer is urged to make early personal contact with the official in charge of the utility company or governmental agency or department with which he will be dealing. He will find it much easier to work with these people during the life of the contract if he has met them personally. He should have more than an impersonal telephone contact with the police organizations. Personal contact with these people to acquaint them with the planned operations prior to actual construction, will enable them to schedule their work or services to the best advantage of all concerned.

Relations With Property Owners

One of the most important phases of the Engineer's public relations work will be in dealing with the property owners near the project. They are the ones who are most affected by construction operations.

In all public relations work, the Engineer is urged to conduct himself in the same manner which he would expect from others. By courteously listening to the property owner's problem or request, or perhaps just a question, and taking the time to explain or answer, he can establish relationships which will be beneficial to both the individuals and the Highway Administration. This will again generally help to avoid unreasonable demands and complaints by the property owner.

It cannot be stressed too strongly that public relations efforts should be started early. The fullest possible cooperation of the Contractor's organization should be solicited in order to most effectively achieve good public relations. By calling property owners together, the Resident Engineer and the superintendent can best assure them that inconvenience and the nuisance of noise and dust will be kept to a minimum. At times, it may be advantageous for the Contractor to distribute his own information to the property owners and the general public.

Relations With The General Public

The main differences in public relations toward the property owners and the general public are the scope of coverage and the degree of personal contact. Where information must be conveyed to large numbers of highway users, including those commuting regularly over a given route on which improvements are being constructed or those who use that route only occasionally, full use of the press, radio, and even television is the most satisfactory method.

Another proven method of promoting good public relations is the appearance of district personnel as speakers at meetings. Resident Engineers so inclined should join local organizations. Frequent notices and progress reports in the local press are also a very common and effective method of keeping the public informed of changing conditions of the project.

News releases should be issued by the District Office on advice by the Resident Engineer or may be issued by the Resident Engineer, depending upon district policy. The District Office should contact the local press before the job starts, tell them how they can get in touch with the proper person for information during the life of the contract and invite them to tour the job with the Resident Engineer. In special cases, pamphlets may be prepared and passed out to motorists who are subjected to delays in passing through construction.

CHAPTER II

GENERAL PROVISIONS

This chapter provides highway agency construction personnel with basic orientation related to:

- Specifications,
- Highway plans,
- Bridge plans,
- Construction staking, and
- Highway terms and definitions.

Specifications

Contract specifications are documented in several ways. Standard Specifications usually are presented in a bound book that becomes part of the contract documents. Supplemental Specifications usually are attached to contract documents and reflect changes in specifications. Special Provisions are related to unusual conditions on an individual project or to considerations not included in other specifications.

Standard Specifications

The Standard Specifications contain three areas of specifications that differ from each other in some major aspects. The first area is the General Provisions which comprise Section 100. These specifications cover such items as definitions, contract procedures, legal relations, prosecution and progress, and general rules of measurement and payment.

The second area relates to different items of construction. These comprise Sections 200 through 600 and define or contain such items as description of work, materials used, methods of construction, methods of measurement and basis of payment.

The last area includes the material specifications that are referred to in the General Specifications. The tests included are those which the Field Engineer will perform or be closely related to. Other tests required by the Specifications that are not included are available at the Highway Administration Headquarters.

Supplemental Specifications

The Supplemental Specifications amend, delete, or add to the Standard Specifications and give additional information related, in general, to all projects. The Field Engineer should become thoroughly acquainted with these Supplemental Specifications before the Contractor starts work on the project. These specifications will appear in the contract documents.

Special Provisions

The Special Provisions are almost the same as the Supplemental Specifications except they relate or apply to one specific project. Examples of Special Provisions might be the requirements of maintaining horizontal and vertical clearances of a temporary bridge over a navigable river or the relocation of House No. 16 to a specified location shown on the plans. These should be reviewed in the same manner as the Supplemental Specifications.

Governing Order

Although the plans will be discussed following this explanation, it seems appropriate at this time to discuss the governing order among the plans and specifications. The Field Engineer, must at all times, be aware that this order of governing is a legal part of the contract and must be adhered to without exception.

A Special Provision has top priority and governs over any other part of the legal contract.

The Plans govern overall portions of the contract, except the Special Provisions.

Next, in order, are the Supplemental Specifications. These govern only over the Standard Specifications.

HIGHWAY PLANS

Field Engineers and inspection personnel must have a thorough knowledge of construction plans. The objective of this portion of the Manual is to make project personnel aware of how the parts of the plans fit together and where certain information is located. Complete interpretation of the plans comes from experience in using the plans in an actual working situation. The following is the general content of all Project Plans; the contents and location of information may vary slightly in any particular set of plans.

Title Sheet

The Title sheet, or first sheet of the plans, will contain the following information:

1. Location Map - this is located in the upper left corner of the sheet and shows the general location of the project within the District.

2. Layout Map - located in the center of the title sheet, this small scale map shows, in detail, the topography surrounding the project, the stationing of the project, route numbers, railroads, and other physical features.

3. Title Information - this information, in the top center of the title sheet gives the project name and number, District, the types of work involved, and project length to the nearest tenth of a kilometer or one hundredth of a mile.

4. Design Data - this information will appear in a block in the upper right corner of the sheet. Both highway and bridge design data are given here.

5. Reduced Plans - when plans are reduced in size, this will be shown above the title block on the title sheet. (It will also appear in the lower right corner of every reduced sheet).

Table of Contents Sheet

The Table of Contents sheet is the second sheet in a set of plans. The sheet is self-explanatory.

Symbols and Abbreviations Sheet

This is the third sheet and is also self-explanatory.

Notes Sheet

The Notes sheet provides general information necessary for plan users to understand the contract plans. The notes should be thoroughly understood before attempting to use the remaining sheets of the plans. In general, the notes apply to the remaining sheets.

Typical Sections Sheet

The Typical Sections sheet or sheets show the dimensions and physical properties of the various materials of a cross-sectional view of the highway. A typical section is one whose characteristics usually will be used numerous times on the original ground cross sections. These will indicate thicknesses and widths of the different layers of material from the highway base to the subgrade, side slope gradients and any other feature necessary to construct the highway as designed.

Each project cross section will show the original ground plotted with one of the typical sections superimposed upon it. The user of the plans will have to, from inspection, determine which typical section is being used.

In areas of transition, the plan user must interpret, from each section, the amount of change from the typical section.

The typical sections will also show the quantities of materials for that particular section. These are quantities that do not vary from station to station.

Also these quantities will be shown in units per 100 meters.

This information is primarily for the use of the Engineer in estimating quantities for progress estimates and for the final quantities. Many other uses can be made from this information to control the work as it progresses such as checks of materials measured by other methods.

Summary Sheet

The Summary sheet will show the estimated quantities of work and material, as required by the Plans and Specifications. These, like the quantity units on the typical sections, are a valuable guide to the Engineer in controlling the work and for preparing monthly progress estimates for payment to the Contractor.

It must be understood, clearly, that these quantities are estimated quantities and cannot be used for, or instead of, computed final quantities. Each quantity in the contract, with the exception of Lump Sum items, must be computed by the Engineer in accordance with the Specifications. These actual measured quantities will vary in almost every case with the quantities on the Summary sheet.

Detail Sheet

The Detail sheet shows nonstandard items or more detailed drawings of portions of the work that cannot be shown clearly on other sheets. It will also show the mass diagram if one is used. This Detail sheet will not show details of bridges and related structures; these will be in the bridge or structure portion of the plans.

The mass diagram will be helpful in providing an overall view of the earth quantities and where they are to be placed. Balance points, earth volumes and haul quantities are shown.

Right-of-Way Sheet

The Right-of-Way sheet is an ownership summary sheet to be used with the right-of-way data found on the Plan and Profile sheets. It is useful to the Engineer for help in determining the owner's name of any parcel of land abutting the project. Many highway Administrators use separate sets of plans for the right-of-way.

Plan and Profile Sheets

These sheets comprise the basic work sheets of the project. The top portion of each sheet indicates the following:

1. The horizontal alignment along the project including all horizontal control information for tangents, curves, and tie points to establish these controls.

2. The topography of a strip of land from the highway centerline to the right-of-way line and beyond. This includes all features, natural and manmade, that are of significance.

3. All right-of-way lines.

4. Underground utilities.

5. Overhead utility lines.

6. Horizontal alignment of temporary detours and bridges.

7. Any other information that can best be shown on a plan view.

The lower portion of the sheet shows the vertical alignment and its necessary control information. It should be noted that the two scales are not the same, vertically and horizontally and this will cause such things as circular pipes to appear distorted or egg-shaped. The only structures shown on the profile section are culverts and bridges.

The original ground at the centerline is also shown on this portion of the sheet.

Cross Section Sheets

The Cross Section sheets show graphical pictures of the relationships between the proposed roadway and the existing ground surface. These sections are shown at all normal sections and at selected intermediate stations if they are needed to make some portion of the work more clear. Of all the sheets in a contract, these are the ones that will be used the most by the Contractor's foremen.

These sheets will also show the cut or fill areas of each section, and these quantities are valuable to the Engineer for estimating quantities for progress estimates. They have no value in determining final quantities. The Engineer must take his own original ground sections, plot the correct typical section on it, and determine the actual quantities of cut or fill.

This seeming duplication of work is necessary because the original survey may have been made a long time prior to actual construction and many changes may have taken place such as the addition of or removal of material, subsidence of the soil, erosion or deposition of material by water action and other changes. In fairness to the Contractor and the Highway Administration these changes must be recorded just before the start of the work.

BRIDGE PLANS

The following descriptions of a set of Bridge Plans are given as if the project were a bridge project including some approach work. These plans will differ slightly in numerical order of the various sheets from that given under PLANS.

In a combined highway and bridge project, the Structure Plans will follow the Highway Plans. Whenever possible, sheets described below will be eliminated and the information will appear with the Highway Plans.

Survey Sheet

The Survey sheet is very similar to the Plan and Profile sheet described above. The exceptions are that generally more detail is shown in the bridge area and this additional detail is taken with great care, particularly if there is an existing structure. This is often necessary if any portion of the existing structure can be utilized in the design of the new one.

Structures that cross water also require hydrologic information and this is easier to obtain at the same time the survey is being made. This hydrologic information will aid the Engineer in determining the adequacy of temporary bridges, the effects of cofferdams, and in other ways when the Contractor is working in or around the water.

Layout Sheet

A Layout sheet is only necessary and used if the structure layout is too complicated to be placed on the survey sheet. This sheet enables the Engineer to readily see the basic data necessary for the layout of the bridge and shows the control points and horizontal alignment if different for the structure itself. It is not uncommon to use a series of chords, if a multi-span structure is on a curve. Skew angles, if used, are also shown clearly on a separate layout sheet.

Typical Sections and Cross Sections Sheet

These sections are the same as those described under Highway Plans.

Soils Report Sheet

The Soils Report sheet, used primarily for structures requiring an extensive soils survey, contains information that is of great importance to the Field Engineer when the foundation units are being constructed. Foundation excavations should be examined closely and the material excavated and exposed should be compared with the soils report. If the soil is found to be less stable than that shown on the soils report, the Soils Division or the Design Division or both should be contacted. The bearing capacity of the soil is an important factor in the design of a footing. If the bearing capacity of the soil is less than the designer anticipated, the footing may have to be redesigned.

Similar use of the soils report should also be made while driving piles. If the log of the piles being driven indicates that subsurface conditions vary greatly from the soils report, it may be necessary to change the length or the number of piles.

Substructure Details Sheet

The Substructure Details sheet or sheets will show all the information necessary to construct the substructure units, such as abutments, piers, bents, and the bases of other related structures.

If piling is used, these sheets will show the pile layout and the pile details.

The mark, size, number, and location of all reinforcing steel will also be shown.

Beam or Girder Details Sheet

This sheet will show the details of prestressed beams, cast-in-place beams, steel beams, wood beams or any other beam or girder that is to be used in the work.

The details for these beams and girders must be complete.

Superstructure Details

The Superstructure Details sheet will show plan views and numerous sections necessary to construct the superstructure or deck.

In addition to the deck, the following parts of the structure will also be detailed on these sheets:

1. Sidewalks, if any are used,

2. Railings and parapets,

3. Bearing devices,

4. Post tensioning details, if used, and

6. Other units as required.

This portion of the Bridge Plans generally contains more details which require careful study by the Engineer. Much of the information relates to the use of temperature expansion and contraction devices, safety rails, the riding quality of the bridge decks and to the quality and workmanship of the superstructure in general, which are matters of concern to the safety and comfort of the general public.

Slope Protection Sheets

Most larger structures and practically all water crossings require some form of slope protection from erosion. Slopes in front of abutments, which seldom, if ever, receive sunlight, will not support vegetation and the slope will rapidly erode. If erosion becomes severe, undermining of the abutment will result.

There are numerous types of slope protection and whichever type is selected will be detailed on this sheet.

CONSTRUCTION STAKING

Construction staking is an essential first step for the construction of bridges and highways, and accuracy and accessibility of stakes during construction are the keys to good control. With this in mind, the following staking practices are recommended:

1. Check all dimensions relative to layout on plans before staking.

2. Check alignment and stationing in the field.

3. Check benchmarks in the field from two independent references when possible.

4. Do all staking before construction operations begin.

5. Visibility of stakes during construction is very important and precautions should be taken to ensure that they are easily seen.

6. Check the accuracy of staking.

Staking of Roadway

All staking must be accomplished by the highway organization or their consultant, never the Contractor. This will include, but will not be limited to, the following:

A. Reference Stakes

1. These must be set at right angles to the highway centerline at each section and in such a way that the centerline can be re-established rapidly.
2. Control points will be set using a transit at least every 350 meters.
3. Reference stakes at each section will generally be set on the right-of-way line.
4. The station and distance from centerline will be marked on the face of stake and the cut or fill to the centerline sub-base profile will be marked on the back of the stake.

B. Slope Stakes. These will be set at the exact location in which the cut or fill bisects the original ground line and will be driven on a slant with the cut or fill marked on the front of the stake so it can be read from construction equipment. The station will be marked on the back. Elevation will be taken directly in front of slope stake and on the original ground line. The distance from centerline will be marked below the cut or fill as shown in the diagram.

FRONT

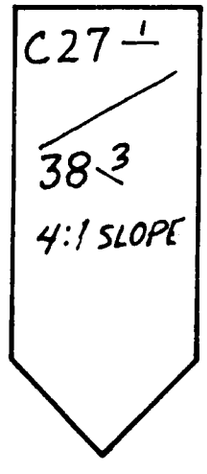

BACK

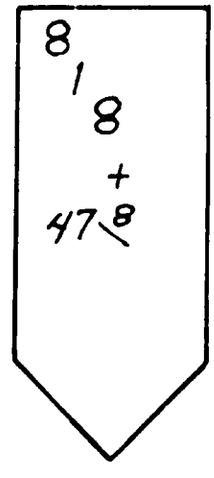

C. Culverts and minor structures are also staked for alignment and grade. For example, in the case of culverts, one or more stakes are driven on the centerline of the culvert, both above the inlet and below and far enough away so that they will not be disturbed during installation.

The invert elevation of the inlet and outlet of the pipes are given as a cut or fill from a hub or stake driven flush with the ground, one meter from the end of the pipe if feasible.

D. Elevation control benchmarks will be established throughout the length of project. These are points at which the elevation is determined and recorded in the field book. These points may be a projecting horizontal spike in the base of a tree, or the top of any fixed and sturdy object where the elevation will not change during construction. These benchmarks should be established at least every 200 meters.

An illustration of typical highway construction staking is shown in the illustrations on the following page.

Details Regarding Stakes

Use substantial wood material smooth on two sides, sized as follows:

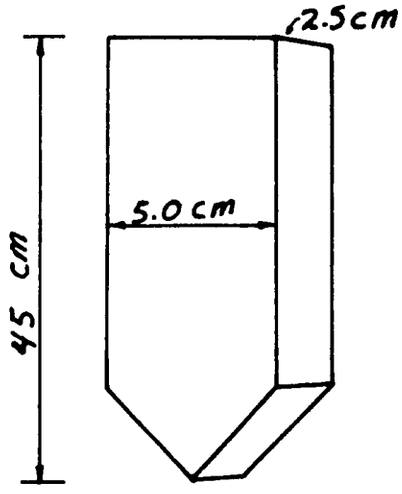

STAKE

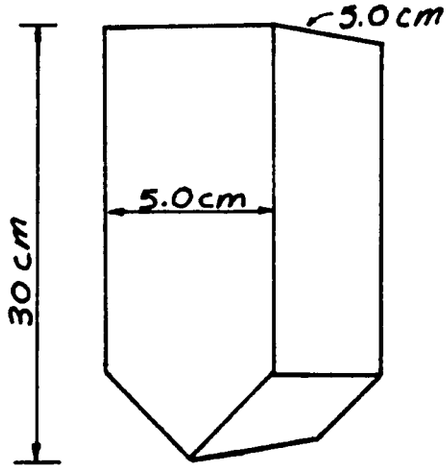

HUB

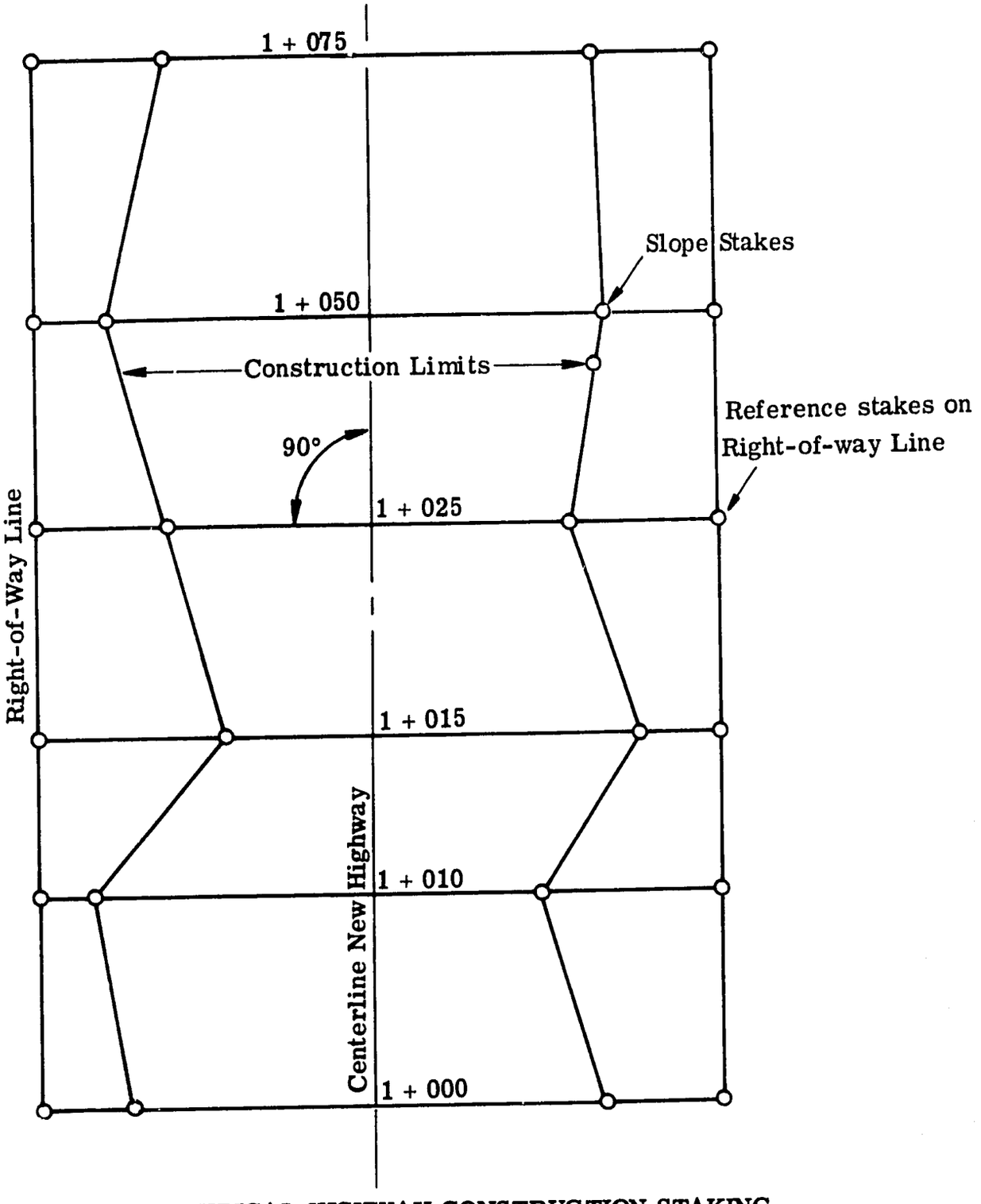

TYPICAL HIGHWAY CONSTRUCTION STAKING

All hubs used as reference points should be driven flush with the ground. If used for elevation control, they need not be an exact distance from centerline. If used as a control point, they must be at the correct angle and distance with a nail driven in top as the reference point.

Always protect hubs with substantial guard stakes.

Bridge Layouts

The layout or staking of structures is quite unlike that of road staking. Individual units of the structure are laid out and staked both in the transverse and longitudinal directions. If the structure is skewed, the transverse control stakes define the skew line. (See the sketch of a typical bridge layout, following this section.)

On smaller structures such as box culverts or retaining walls, the face of the vertical portion of the unit is often a better control line than a centerline or the top or bottom of battered surfaces.

Accuracy is extremely important as the layout generally involves the location of substructure units which are physically separated. These will become connected physically by the top or superstructure of the bridge and there is little room for error as the units of the superstructure are usually prefabricated to the design dimensions at a location far from the jobsite.

On river crossings, it is often necessary to establish distances other than by direct measurements. If electronic measuring devices are not available, triangulation methods must be used and the following rules will be helpful in establishing distance by triangulation:

1. Measurements should be corrected for temperature and scales should be used to obtain the desirable tension on the tape.

2. It is preferable to lay out a base line so that it will not be necessary to use a plumb bob nor correct for slope measurements.

3. If it is necessary to lay out the base line on rough ground, compute horizontal distances from vertical angles, measured by transit.

4. If possible, the base line should be perpendicular to the centerline, as this will simplify computations.

5. Measured angles between base line and centerline should be larger than 6 degrees.

Control of elevation of all portions of the structure are equally important and a series of accurate, double checked benchmarks are the basics of good control. As the work on the substructure units progresses, additional benchmarks established on these permanent units often are helpful as they are nearer the work, thus saving time in establishing elevations as work progresses. Also by reducing the length of the foresights and backsights, greater accuracy is obtained.

An easy way to establish a benchmark in a concrete unit is to insert a large spike vertically in the fresh or green concrete, leaving the head of the spike exposed about 5 mm.

Shown on the following pages are:

1. A typical bridge layout,

2. A typical triangulation layout,

3. An example solution to a triangulation layout, and

4. A typical concrete box layout.

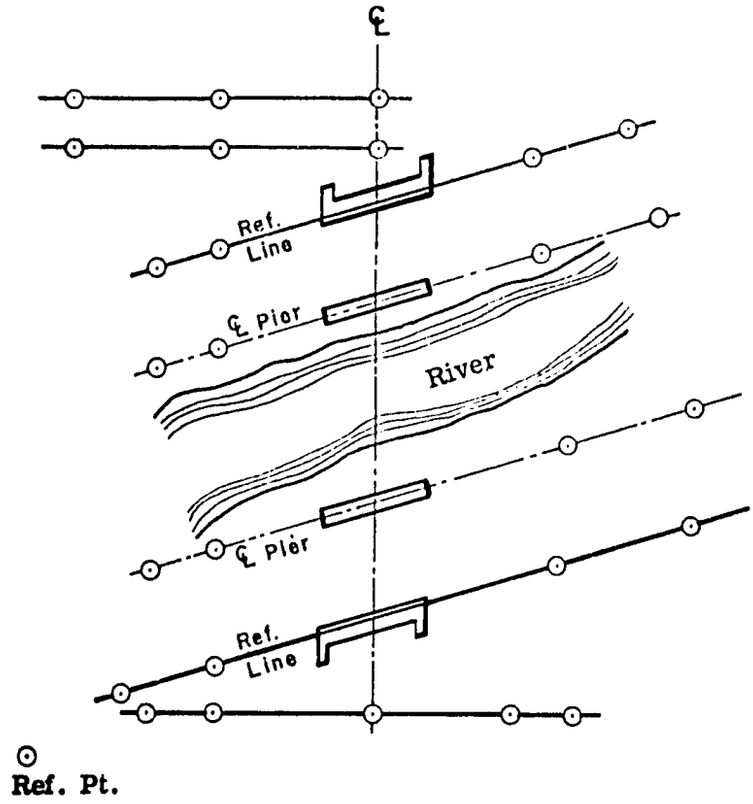

TYPICAL BRIDGE LAYOUT

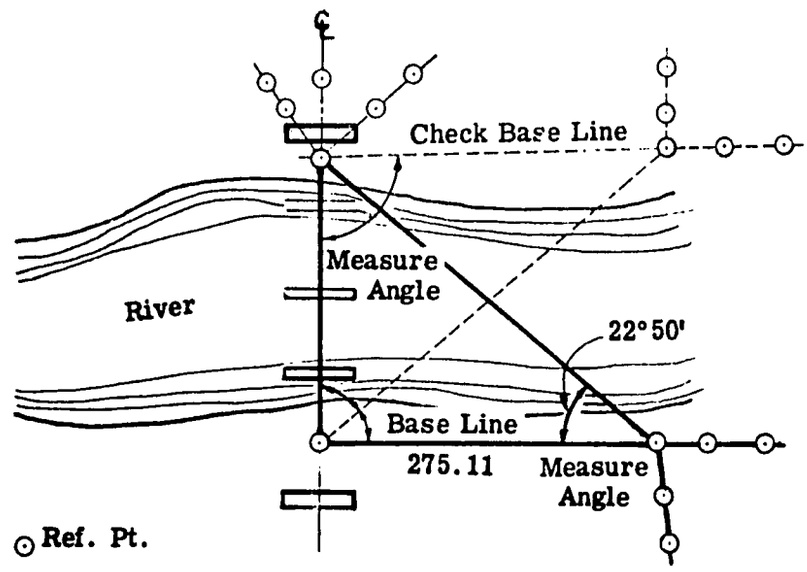

TYPICAL TRIANGULATION LAYOUT

Following is the solution to the above problem.

SOLUTION TO TRIANGULATION LAYOUT

The purpose of the typical triangulation layout on the preceding page is to accurately determine the horizontal distance across the river along the centerline when conventional chaining practices cannot be used. The procedures are:

1. Establish points B and C along the survey centerline at visible locations on opposite sides of the river.

2. Turn a right angle from the centerline at point C to establish a base line roughly parallel to the river.

3. Establish point A along the base line at a location where points C and B are both visible -- and measure the distance AC.

4. Set up at point A and measure the angle between AC and AB.

The known information is shown below:

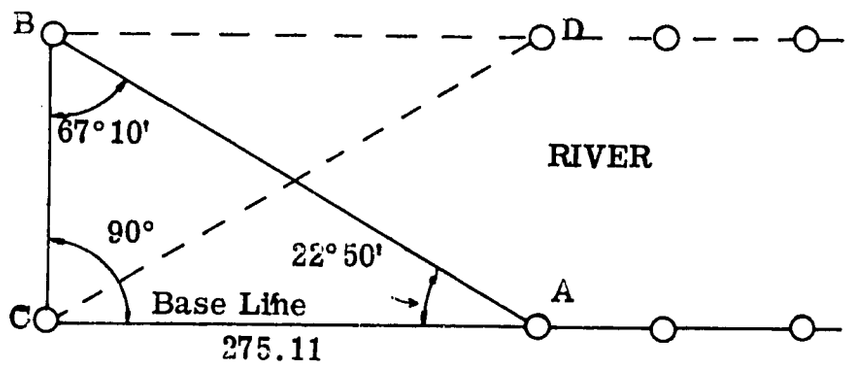

The problem is to determine the distance BC. This is computed by the following formula:

BC = AC x Tangent of angle A = 275.11 x 0.4210460

BC = 115.83

This distance measurement can readily be checked by establishing a new base line, BD, on the opposite side of the river and repeating the procedure.

Other trigonometric formulas and guides are given at the end of the Manual in the section on "Tables and Conversion Charts."

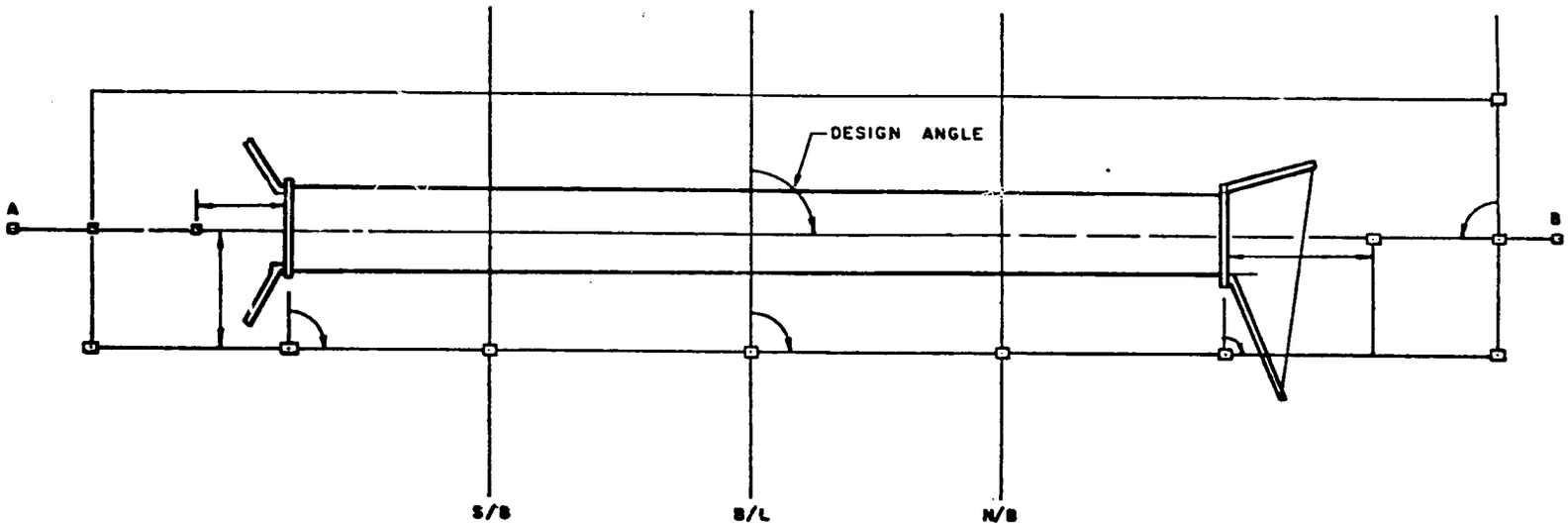

CONCRETE BOX LAYOUT

1. Establish roadway centerline station or the line that the structure is controlled by.
2. Occupy and establish line AB and other points along this line. Indicate beginning and end of box with offsets from ℄ .
3. Establish a line parallel to line of box and use this line as working control until excavation is complete.
4. Along the parallel offset line, establish control points opposite the ones you wish to control for future layout work, such as expansion and construction joint locations.
5. Useful and accurate control must be easily reproduced to be of any real value to the project engineer or inspector. All control must be established with this in mind.
6. Any grades given must be to flow line elevation only.
7. Offsets should be to centerline of structure and inlet and outlet only.

HIGHWAY TERMS AND DEFINITIONS

As an aid in understanding nomenclature used in highway work, this section defines many of the standard terms recognized by Highway Engineers. The terms "highway" and "road" as used herein, shall be construed to be the same.

Types of Highways

a. National Highways. The network of roads officially designated as a responsibility of the National government.

b. Province, County Roads. Every public highway outside of city limits and towns not designated as National Highways.

c. Arterial Highways. Every public highway, or portion thereof designated as such by proper authority.

d. Control of Access. The condition where the rights of owners or occupants of abutting land or other persons to access, light, air or view as related to a highway facility is fully or partially controlled by public authority.

e. Full control of access means that the authority to control access is exercised to give preference to through traffic by providing access connections with selected public roads only and by prohibiting crossings at grade or private driveway connections.

f. Partial control of access means that the authority to control access is exercised to give preference to through traffic to a degree that, in addition to access connections with selected public roads, there may be some crossings at grade and some private driveway connections.

g. Expressway. A divided arterial highway for through traffic with full or partial control of access and generally with grade separation at intersections.

h. Freeway. An expressway with full control of access.

i. Parkway. An arterial highway with full or partial control of access, usually located within a park or a ribbon of parklike developments, and limited to passenger cars only.

j. Major Street or Major Highway. An arterial highway with intersections at grade and direct access to abutting property of which geometric design and traffic control measures are used to expedite the safe movement of through traffic.

k. Local Streets or Local Roads. A street or road primarily for access to residence, business or other abutting property.

l. Divided Highway. A highway with separate roadways for traffic in opposite directions.

m. Toll Road, Toll Bridge, or Toll Tunnel. A highway, bridge or tunnel open to traffic only upon payment of a direct toll or fee.

Elements of the Cross Sections

a. Highway. The entire width between the right-of-way or boundary lines of all publicly maintained highways.

b. Roadway. The paved, improved or proper driving portion of public highway designed or designated for vehicular traffic, including shoulders and auxiliary lanes.

c. Median. The portion of a divided highway separating the traveled ways for traffic in opposite directions.

d. Traveled Way. The portion of the roadway for the movement of vehicles, exclusive of shoulders and auxiliary lanes.

e. Shoulder. The portion of the roadway contiguous with traveled way for accommodation of stopped vehicles for emergency use and lateral support of base and surface courses.

f. Traffic Lanes. The portion of the traveled way for movement of a single line of vehicles.

g. Parking Lanes. An auxiliary lane primarily for the parking of vehicles.

h. Speed Change Lane. An auxiliary lane including tapered areas primarily for the acceleration or deceleration of vehicles entering or leading through traffic lanes.

i. Median Lane. A speed change lane within the median to accommodate left-turn movements.

j. Auxiliary Lane. The primary purpose of auxiliary lanes is to provide storage and for turning movements.

Traffic Terms

a. Motor Vehicle. Every vehicle which is self-propelled and every vehicle which is propelled by electric power obtained from overhead trolley wires, but not operated upon rails.

b. Auto Stage (Bus) means any motor vehicle used for the purpose of carrying passengers together with incidental baggage.

c. Truck Tractor. Any motor truck designated and used primarily for drawing a semi-trailer and not constructed to carry a load thereon other than a part of the weight of such semi-trailer and load so drawn.

d. Road Tractor. Every motor vehicle designed and used primarily as a road building vehicle in drawing road building machinery and devices.

e. Traffic Control Devices. All signs, signals, markings and devices not inconsistent with established laws and erected by authority of a public body or officials having jurisdiction for the purpose of regulating, warning or directing traffic.

f. Traffic Marking. A traffic control device consisting of lines, patterns or colors on the pavement, curbs, or other objects within or adjacent to the roadway, or words or symbols on the pavement.

g. Traffic Control Signal. Any traffic device, whether manually, electronically, or mechanically operated, by which traffic alternately is directed to stop or proceed or otherwise controlled.

h. Delay. The time lost while traffic is impeded by some element over which driver has no control.

i. Speed. The rate of movement of a vehicle, generally expressed in either kilometers or miles per hour.

j. Design Speed. A speed determined for design and correlation of the physical features of a highway that influence vehicle operation. It is the maximum safe speed that can be maintained over a specified section of highway when conditions are so favorable that the design features of the highway governs.

k. Merging. The converging of separate streams of traffic into a single stream.

l. Diverging. The dividing of a single stream of traffic into separate streams.

m. Weaving. The crossing of traffic streams moving in the same general direction accomplished by merging and diverging.

n. Volume. The number of vehicles passing a given point during a specified period of time.

o. Density. The number of vehicles per kilometer, or mile of traveled way at a given instant.

p. Design Volume. A volume determined for use in design representing traffic expected to use the highway; unless otherwise stated, it is an hourly volume.

q. Average Daily Traffic. The average 24 hour volume being the total volume during a stated period divided by the number of days in the period. Unless otherwise stated, the period is a year. The term is commonly abbreviated as ADT.

r. Thirtieth Highest Hourly Volume. The hourly volume that is exceeded by 29 hourly volumes during a designated year. (Corresponding definitions apply to any other ordinal highest hourly volume such as tenth, twentieth, etc.)

s. Design Capacity. The practical capacity or lesser value determined for use in designing the highway to accommodate the design volume.

Intersection Terms

a. Channelized Intersection. An at grade intersection in which traffic is directed into definite paths by islands.

b. Unchannelized Intersection. An at grade intersection without islands for directing traffic into definite paths.

c. Railroad Crossing Angle. The angle of 90 degrees or less where a railroad and highway intersect.

d. Skew Angle. The complement of the acute angle between two centerlines which cross.

e. Minimum Turning Radius. The radius of the minimum turning path, of the outside of the outer front tire. (Secure from auto makers.)

f. Turning Tract Width. The radial distance between the turning path of the outside of the outer front tire and the outside of the rear tire which is nearest to the center of the turn.

g. Grade Separation. A crossing of two highways, or a highway and a railroad of different levels.

h. Underpass. A grade separation where the subject highway passes under an intersecting highway or railroad.

i. Overpass. A grade separation where the subject highway passes over an intersecting highway or railroad.

j. Interchange Ramp. A turning roadway of an interchange for travel between intersection legs.

k. Two-way Ramp. A ramp for travel in two directions. At a cloverleaf it serves as both an outer connection and a loop.

l. Cloverleaf. A four leg interchange with loops for left turn and outer connections for right turns or two way ramps for these turns. A full cloverleaf has ramps for two turning movements in each quadrant.

m. Diamond Interchange. A four leg interchange with single one way ramp in each quadrant. All left turns are made directly on the minor highways.

Right-of-Way Terms.

a. Right-of-Way. A general term denoting land, property or interest therein usually in a strip, acquired for or devoted to a highway.

b. Partial Taking. The purchasing of a portion of a parcel of property.

c. Remainder. The portion of a parcel retained by the owner after a part of such parcel has been acquired.

d. Right-of-Access. The right of ingress to a highway from abutting land and egress from a highway to abutting land.

e. Severance Damages. The loss in value of the remainder of a parcel resulting from an acquisition.

f. Parcel Plat. A map of a single parcel of property or portion thereof needed for highway purposes showing the boundaries areas, the remainder, improvements, access, ownership and other pertinent information.

g. Right-of-Way Appraisal. A determination of the market value of property including damages, if any, as of a specified date, resulting from an analysis of facts.

h. Right-of-Way Estimates. An approximation of the market value of property including damages, if any, in advance of an appraisal.

i. Easement. An easement is an interest in land consisting of the right to do an act, otherwise not permitted on the land of another.

j. Acquisition. Acquisition is to acquire all rights, title and interest to a tract of land.

Pavement Structure Terms.

a. Pavement Structure. The combination of subbase, base course and surface courses placed on a subgrade to support the traffic load and distribute it to the road bed.

b. Flexible Pavement. A pavement structure which maintains intimate contact with and distributes loads to the subgrade and depends upon aggregate interload friction, and cohesion for stability.

c. Rigid pavement. A pavement structure which distributes loads to the subgrade having as one course a portland cement concrete slab of relatively high bending resistance.

d. Axle Load. The total load transmitted by all wheels whose centers may be included between two parallel transverse vertical planes 40 inches apart, extending across the full width of the vehicle.

e. Tandem Axle Load. The total load transmitted by two or more consecutive axles, whose centers may be included between parallel transverse vehicle planes spaced more than 40 inches apart and not more than 96 inches apart, extending across the full width of the vehicle.

f. Embankment Foundation. The material below the original ground surface whose physical characteristics affect the support of the embankment.

g. Embankment. A structure of soil, soil aggregate or broken rock between the embankment foundation and the subgrade.

h. Roadbed. The graded portion of a highway within top and side slopes, prepared as a foundation for the pavement and shoulder.

i. Roadbed Material. The material below the subgrade in cuts and embankments and in embankment foundation extending to such depth as affects the support of the pavement structure.

j. Borrow. Suitable material from sources outside the roadway prism, used primarily for embankments.

k. Backfill Material. Used to replace or the act of replacing material removed during construction; also may denote material placed or the act of placing material adjacent to structures.

l. Subgrade. The top surface of a roadbed upon which the pavement structure and shoulders are constructed.

m. Select Material. Suitable native material obtained from roadway cuts or borrow areas or other similar material used for subbase, roadbed material, shoulder surfacing slope cover or other specific purposes.

n. Subbase. The layer or layers of specified or selected material of designed thickness placed on a subgrade to support a base course.

o. Base Course. The layer or layers of specified or selected material of designated thickness placed on a subbase or a subgrade to support a base course.

p. Leveling Course. The layer of material placed on an existing surface to eliminate irregularities prior to placing an overlaying course.

q. Surface Course. One or more layers of a pavement structure designed to accommodate the traffic load, the top layer of which resists skidding, traffic abrasion and the disintegrating effects of climate. The top layer sometimes is called "Wearing Course."

r. Additive. A substance or agent added in small amounts to a basic ingredient of a mixture prior to mixing.

s. Resurfacing. The placing of one or more new courses on an existing surface.

t. Dense-Graded Aggregate. A well-graded aggregate, so proportioned as to contain a relatively small percentage of voids.

u. Open-Graded Aggregate. A well-graded aggregate containing little or no fines with a relatively large percentage of voids.

Flexible Pavement Terms

a. Bituminous Concrete. A designed combination of dense graded mineral aggregate, filler and bituminous cement mixed in a central plant, laid and compacted while hot.

b. Plant Mixed Surfacing. A designed combination of material components of a flexible pavement mixed on the roadbed or in a traveling plant.

c. Sand Asphalt. A mixture of sand and asphalt, either plant mixed or road mixed.

d. Sheet Asphalt Surfacing. A designed mixture of well graded sand, mineral filler and asphaltic cement processed in a central plant, laid and compacted while hot.

e. Macadam. A layer of coarse, graded, angular mineral aggregate with a filler of fine aggregate, interlocked by compaction.

f. Bituminous Macadam. A Macadam bound with bituminous material.

g. Surface Treatment. One or more applications of bituminous material and cover aggregate or thin plant mix on an old pavement or any element of a new pavement structure.

h. Tack Coat. An application of bituminous materials to an existing surface to provide bond with a superimposed course.

i. Prime Coat. An application of a low viscosity liquid bituminous material to coat and bind mineral particles preparatory to placing a base or surface course.

j. Binder Course. A plant mix of graded aggregate (generally open graded) and bituminous material which constitutes the lower layer of the surface course.

k. Seal Coat. A thin treatment consisting of bituminous material usually with cover aggregate, applied to a surface course. The term includes but is not limited to sand, chip seal, slurry seal, plant mix seal, contrast seal and fog seal.

1. Slurry seal. A seal coat consisting of a semifluid mixture of of asphaltic emulsion and fine aggregates.

2. Contrast seal. A seal coat designed primarily to provide color or texture contrast with an adjacent surface.

3. Fog seal. A thin application of bituminous material without cover aggregate.

l. Asphalt. Asphalt Cement (AC) is considered to be practically pure bitumen which is in a semisolid state at ordinary temperatures.

m. Batch. The quantity of mix discharged from the mixer in one complete operation of the plant.

n. Cutback Asphalt. Asphalt cement which has been rendered liquid by fluxing with a petroleum distillate and includes: RC - rapid curing, MC - medium curing and SC - slow curing.

o. Emulsion. An AC asphalt mixed with water with the aid of a small amount of emulsifying agent (usually a detergent.)

Rigid Pavement Terms

a. Rigid Slab. A section portland cement concrete pavement bounded by joints and edges, designed for continuity of tensile stress.

b. Joint. A designed vertical plane of separation.

c. Longitudinal Joint. A joint normally placed between traffic lanes to control longitudinal cracking.

d. Contraction Joint. A joint at the end of a rigid slab to control the location of transverse cracks.

e. Expansion Joint. A joint located to provide for expansion of a rigid slab, without damage to itself, adjacent slabs or structure.

f. Construction Joint. A joint made necessary by a prolonged interruption in placing of concrete.

g. Warping or Hinged Joint. A joint in which flexure is permitted but separation and vertical displacement of abutting rigid slabs are prevented by metal ties and mechanical or aggregate interlock.

h. Faulting. Differential vertical displacement of rigid slabs at joint or crack.

i. Load Transfer Device. A mechanical means designed to carry loads across a joint.

j. Dowel. A load transfer element usually consisting of a plain round steel bar.

k. Reinforcement Steel. Steel imbedded in a rigid slab to resist tensile stress and detrimental opening of cracks.

l. Tie Bar. A deformed steel bar or connector imbedded in the concrete across a joint to prevent separation of abutting sides.

m. Pumping. The ejection of foundation material, either wet or dry, through joints or cracks or along edges of rigid slabs due to vertical movement of the slab under traffic.

n. Consistency-Designation. The relative mobility of freshly mixed concrete commonly defined as slump.

o. Fineness Modulus. An index of the fineness or coarseness of an aggregate. It is the summation of the accumulated percentage retained on the standard sieve and dividing by 100, the size openings in consecutive sieves are related by constant ratio. The sieves are: 75 mm (3"); 37 mm (1-1/2"); 19 mm (3/4"); 9.5 mm (3/8"); 4.75 mm (No. 4); 2.36 mm (No. 8); 1.18 mm (No. 16); 0.60 mm (No. 30); 0.30 mm (No. 50); 0.15 mm (No. 100).

p. Honeycomb. A surface or interior defect in a concrete mass characterized by the lack of mortar between the coarse aggregate particles.

q. Laitence. Extremely fine material of little or no hardness which may collect on the surface of freshly placed concrete resulting from the use of excess mixing water.

r. Slump. A measure of consistency.

s. Curing Period. A period provided to prevent formation of surface cracks due to rapid loss of water while concrete is plastic and assure attainment of specified strength.

t. Yield. Defined as that part of a cubic meter of concrete produced per sack of cement.

u. Admixture. Materials other than cement, aggregate and water in concrete used to entrain air, retard setting, or accelerate setting.

Soil Engineering Terms

a. Soil. The word soil refers to all of the unconsolidated mineral material at or near the earth surface, plus the air, water, organic matter, and other substances which may be included therein.

b. Residual Soils. A residual soil is located directly above the parent rock from which it has been derived by physical and chemical disintegration and decomposition of bedrock.

c. Cumulose Soils. Cumulose soils are those, such as the peats and mucks, which have been formed by the accumulation of chemically decomposed residues and aquatic plants in marshy or shallow ponded areas.

d. Alluvial Soil. One which has been transported by water and deposited along a stream.

e. Colluvial Soil. This is an accumulation of rock debris or talus at the base of a steep cliff or rock escarpment.

Texture of Soils

a. Texture. The terms commonly used to indicate texture of soil, such as loam, sandy loam, and silty clay, are wholly arbitrary in origin, and their general meaning and connotation may vary from place to place.

b. Sandy Soil and Sandy Loam. Sandy soil is loose and granular. The principal individual grains can readily be seen and felt. Sandy loam contains much sand, but contains enough silt size and clay size material to make it somewhat cohesive.

c. Loam and Silt Loam. Loam is a soil consisting of a relatively even mixture of sand and silt size and clay size particles. It is mellow with a somewhat gritty feel -- yet it is fairly smooth and slightly plastic. Silt loam is a soil in which more than half of the material falls in the range of silt size, but there is a moderate amount of fine sand and only a small amount of clay sized material.

d. Clay Loam and Clay. Clay loam is a fine textured soil which breaks into clods or lumps that are hard when dry. When the moist soil is squeezed between the thumb and finger, it will form a thick ribbon which will break readily, barely sustaining its own weight. The moist soil is plastic and will form a cast which will bear much handling. Clay is a fine textured soil which forms very hard lumps or clods when dry. When the moist soil is squeezed between the thumb and finger, it will form a long, flexible ribbon.

e. Gravelly or Stony Texture. If soil of any of the textural class is mixed with sufficient gravel or broken stone to noticeably influence the appearance and feel of the soil, say with 8 to 10 percent of large particles, it may be described by prefixing gravel or stony stony before the textural class name.

f. Soil Density. Density of soil is defined as the weight per unit volume being expressed in such units as pounds per cubic feet, or grams per cubic centimeter. It is synonymous with the terms unit weight and specific weight. The weight of the dry solid particles in a unit volume of soils is called the dry density; and the weight of the dry solids plus the moisture contained in the void spaces is called the wet density.

g. Specific Gravity. The specific gravity of any soil or solid substance is the ratio of the unit weight of the substance to the unit weight of water.

h. Moisture Content. The moisture content of soil refers to the total amount of water contained therein, either as free water, or capillary water in the soil pores or as absorbed water film around the solid particles.

i. Liquid Limit. The moisture content which is the boundary between the liquid and plastic states for the minus No. 40 fraction of a soil. For the laboratory purposes it may be defined as the moisture content at which that soil fraction will cause a groove to close with 25 blows in a liquid limit device.

j. Plastic Limit. When the moisture content of a soil-water mixture is reduced below liquid limit, the material becomes plastic in character. In this state it no longer flows under its own weight but external force is required to cause it to deform and its bearing power begins to increase appreciably. It loses its stickiness and can be molded in the hands into a ball or any shape. The minimum moisture content at which the mixture acts as a plastic solid is called the Plastic-Limit.

k. Optimum Moisture. The moisture content which will permit maximum dry unit weight to be obtained for a given compactive effort.

l. Permeability. The measure of the facility of a soil mass to transmit liquids; largely dependent upon grain size distribution.

Sketches on the following pages identify terms commonly used in reference to elements of bridges and bridge construction.

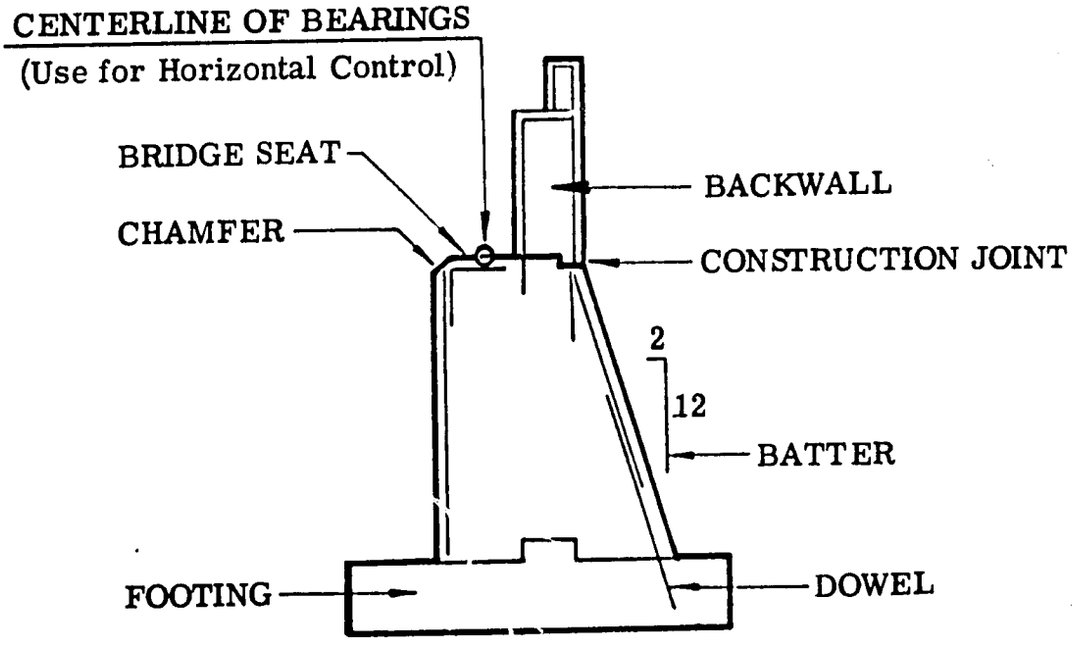

ABUTMENT - SECTION

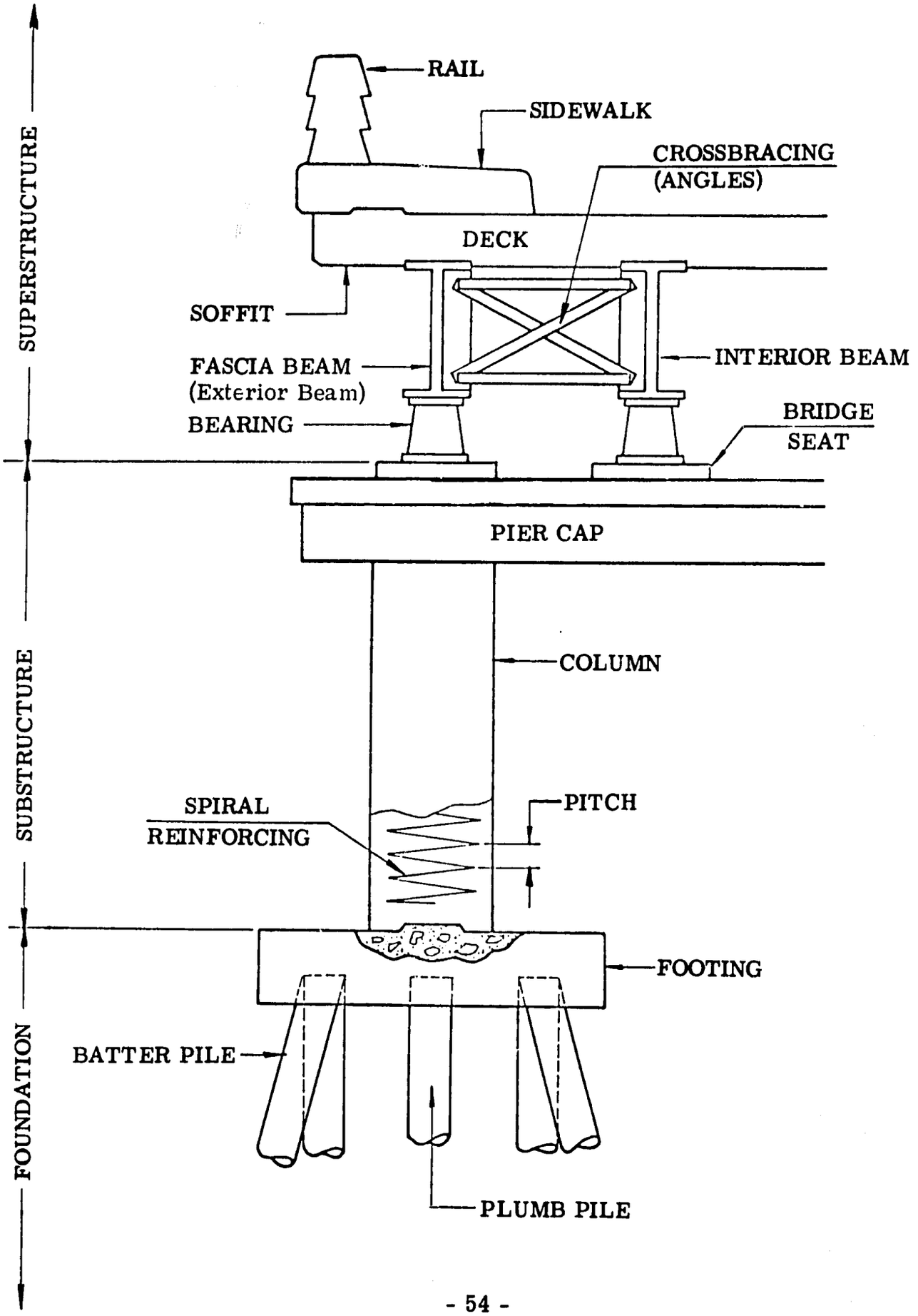
SUPERSTRUCTURE
SUBSTRUCTURE
FOUNDATION
RAIL
SIDEWALK
CROSSBRACING
(ANGLES)
DECK
SOFFIT
FASCIA BEAM
(Exterior Beam)
BEARING
INTERIOR BEAM
BRIDGE
SEAT
PIER CAP
COLUMN
SPIRAL
REINFORCING
PITCH
FOOTING
BATTER PILE
PLUMB PILE

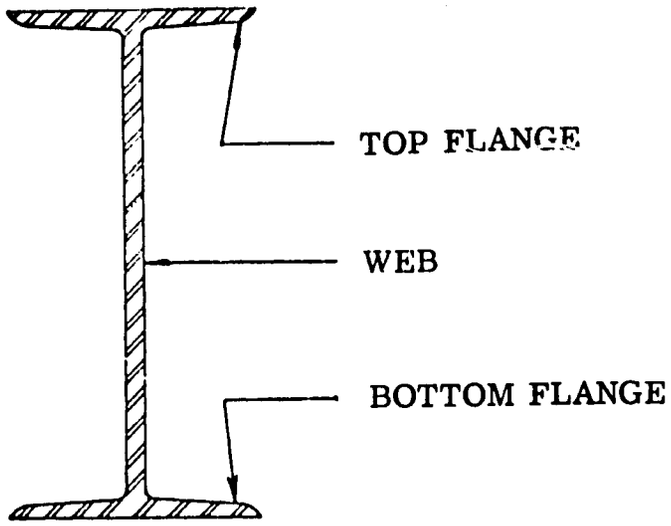

ROLLED BEAM (ROLLED IN ONE PIECE)
This may also be termed a girder or stringer

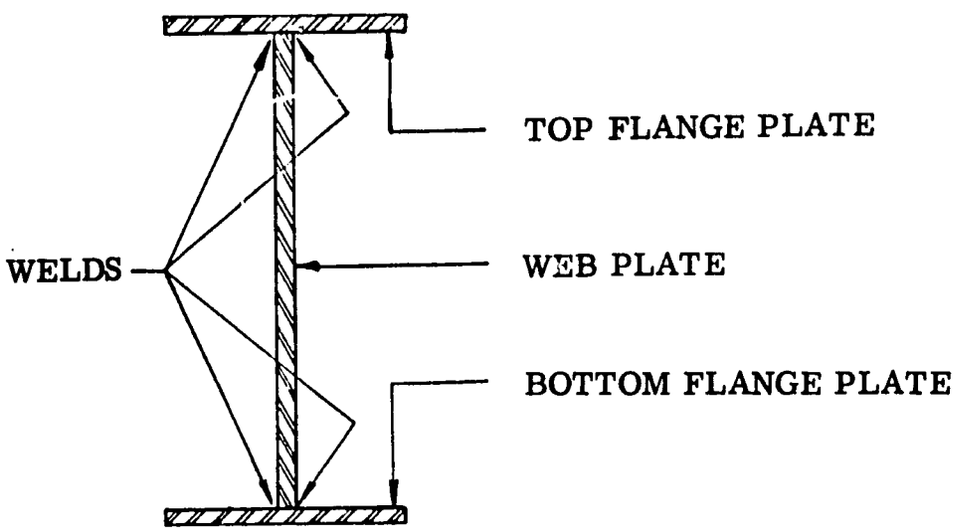

WELDED GIRDER (SEPARATE WEB AND FLANGE PLATES WELDED TOGETHER)

This may also be termed a beam or stringer

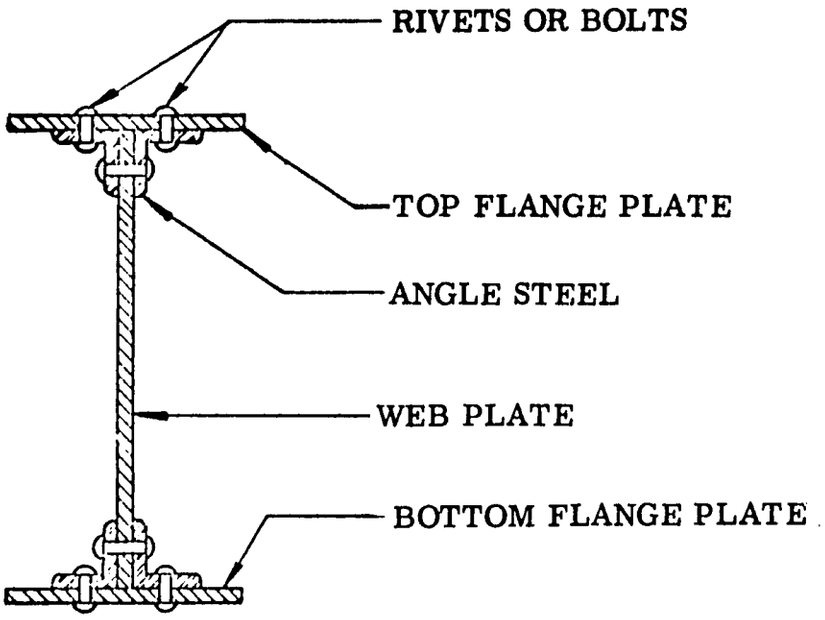

BUILT-UP GIRDER

This may also be termed a beam or girder

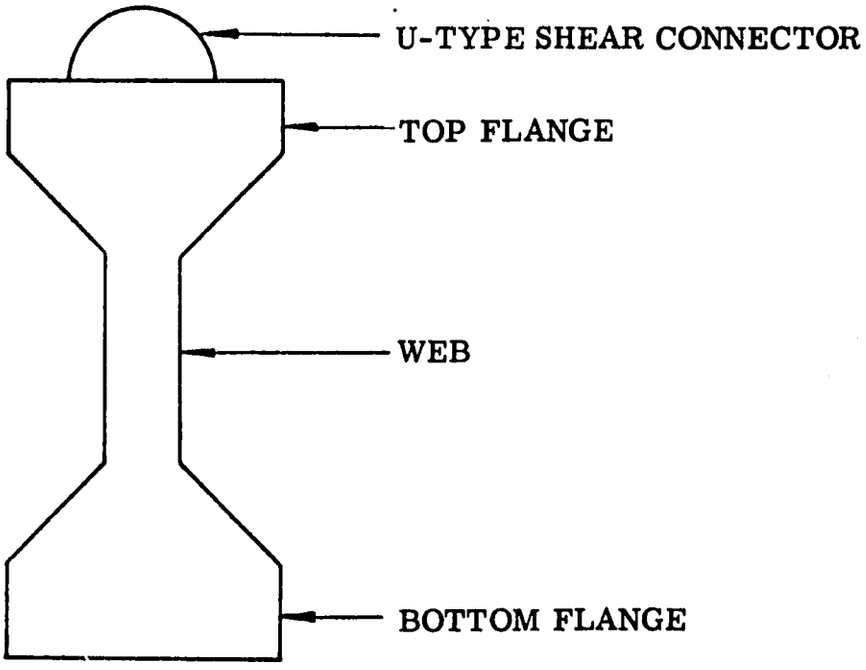

PRESTRESSED CONCRETE STRINGER

This may also be termed a beam or stringer

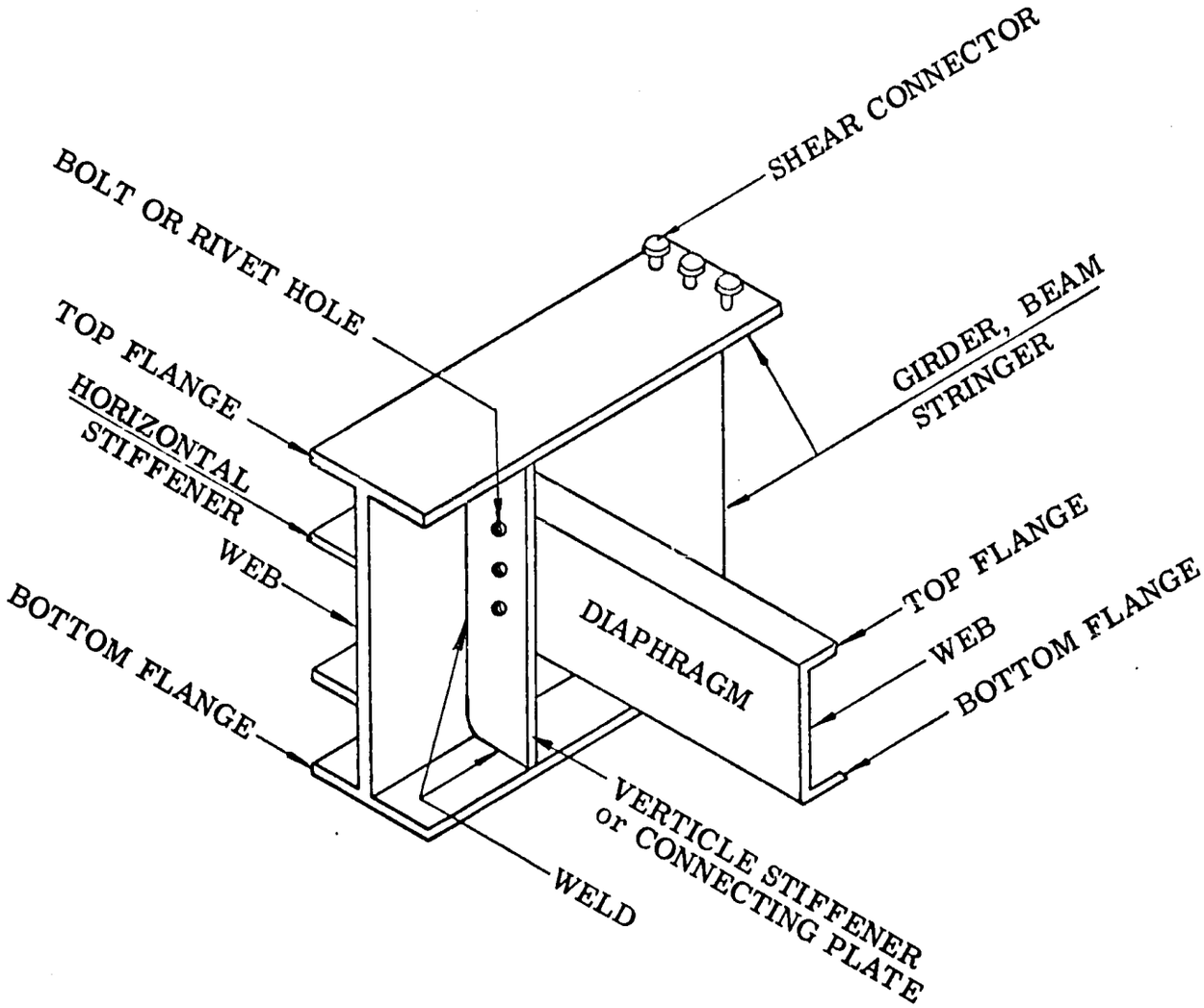
SHEAR CONNECTOR
BOLT OR RIVET HOLE
TOP FLANGE
HORIZONTAL STIFFENER
WEB
BOTTOM FLANGE
GIRDER, BEAM
STRINGER
DIAPHRAGM
TOP FLANGE
WEB
BOTTOM FLANGE
VERTICLE STIFFENER
or CONNECTING PLATE
WELD

BEAM DETAIL

TYPICAL SLAB FALSEWORK DETAILS

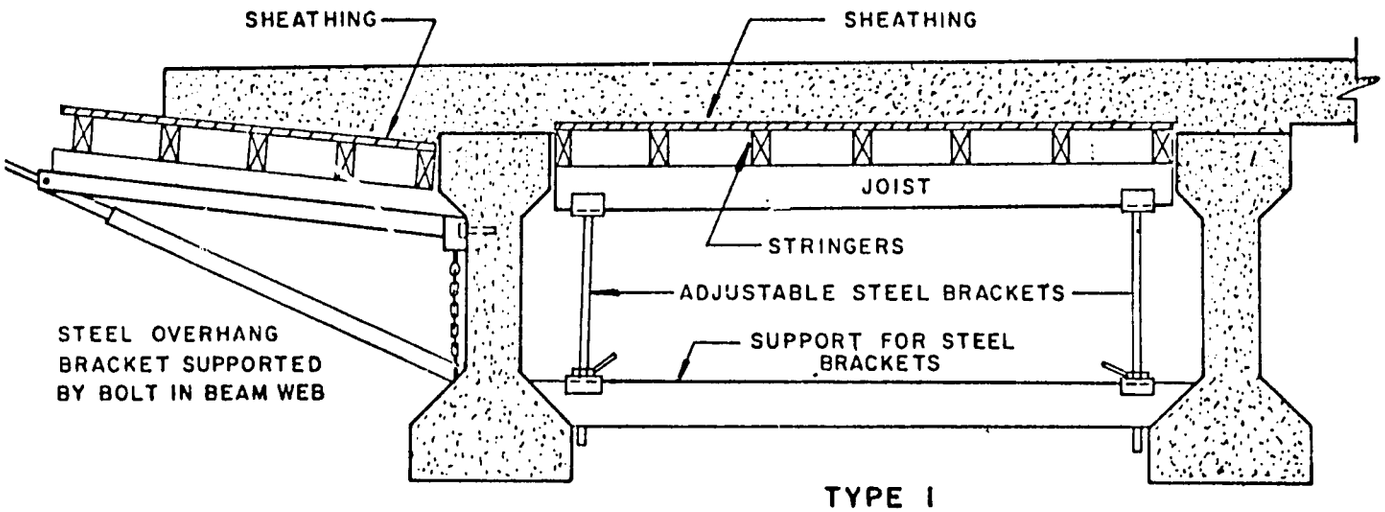

TYPE 1

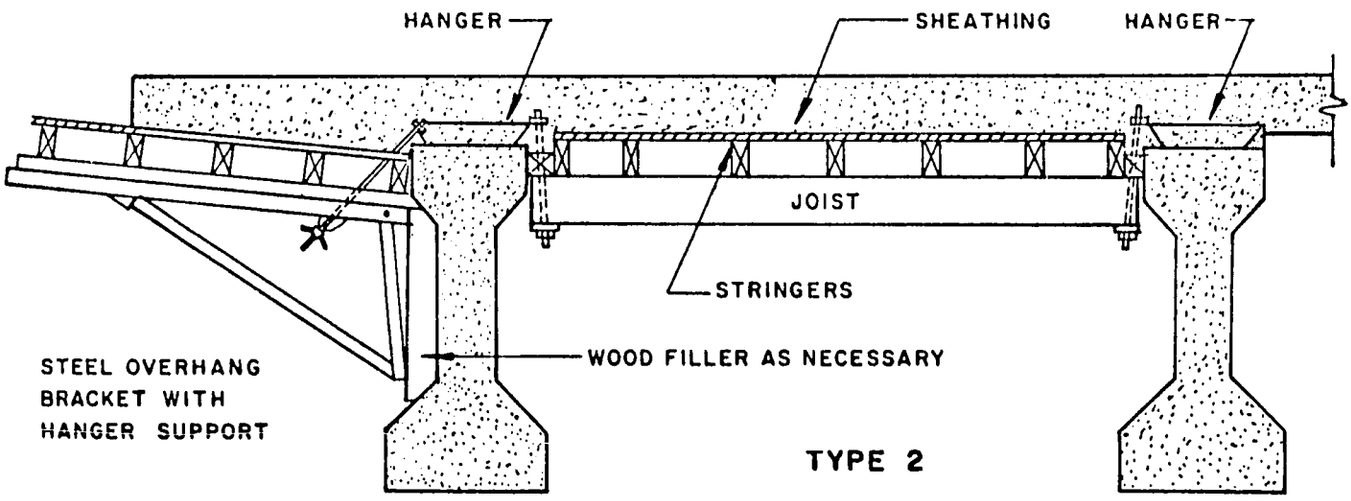

TYPE 2

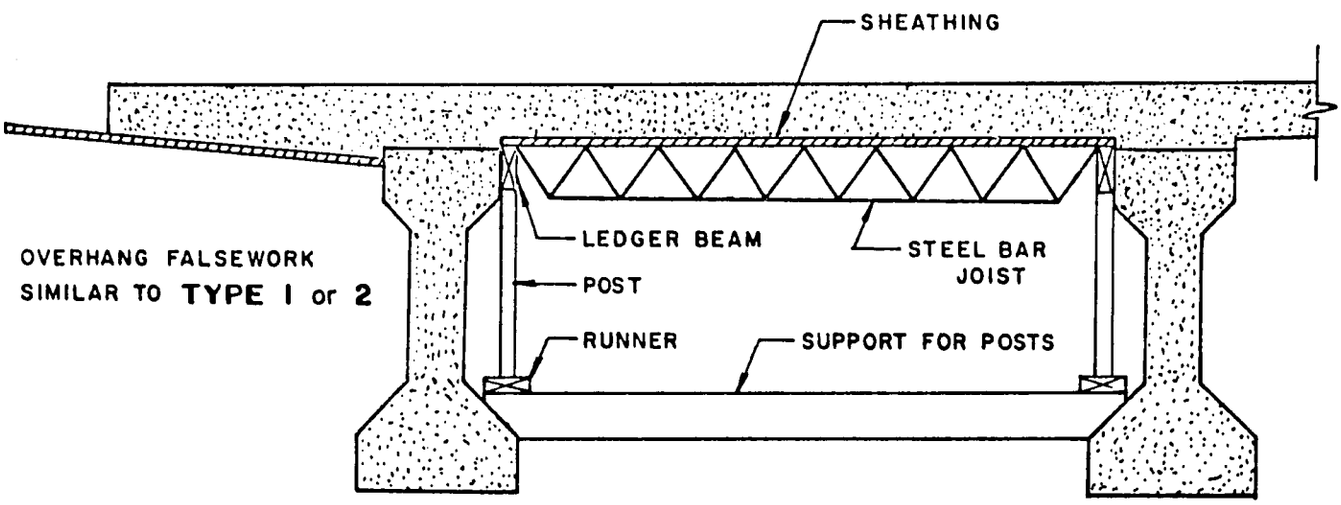

TYPE 3

CHAPTER III

ROADWAY CONSTRUCTION

This chapter describes procedures for construction of major roadway items and identifies principal responsibilities for supervision and inspection of the work.

GENERAL RESPONSIBILITIES

The importance of public relations was discussed in Chapter I. It is essential that good communication and relationship be established at the outset between the Engineer and the Contractor.

Preconstruction Conferences

A preconstruction conference should be held between the Contractor's representative, the Project Engineer, the District Engineer and/or his assistant, and if possible, a representative from Headquarters Construction Division should be present. Discussion of the project, the specifications, unusual conditions, the Contractor's plan and schedule of operation and other pertinent items are conducive to better job understanding.

Concise minutes of the conference should be kept. Such information as the project number, the time and place of meeting, persons present, etc. are recorded and then placed on file with the Project, District and Headquarters Offices. The minutes should cover interpretations of the Plans and Specifications, decisions made, important instructions given to the Contractor, agreements entered into between Contractor and Engineer, and other items pertinent to the project.

The giving and receiving of instructions should be discussed. A very important phase of the initial conference is the agreement on the way instructions are to be handled. The Contractor is required by the Specifications to provide a responsible foreman or superintendent at all construction operations to supervise and carry out the instructions of the Engineer and/or Inspector. The Engineer and Inspector should avoid giving instructions to other than the properly designated superintendent or foreman. The Engineer should keep the Inspector informed of any and all instructions he might give regarding the operation.

The Engineer or Inspector should not make any adjustment to the plants or pavers, or any other equipment. When an adjustment is necessary, instructions should be given to the designated person in charge of the operation. Neither should the superintendent or foreman make any adjustment that would effect a change in the final product without first consulting the Engineer or Inspector. Such an agreement strictly honored by all parties will insure a harmonious relationship between Contractor's personnel and the Inspectors.

The Plans and Specifications define the end product required without being restrictive as to methods and equipment which might be used to accomplish the desired results most efficiently. Because it is not practical to extend specifications into minute details, the Engineer and his Inspectors should, at the preconstruction conference, confer with the Contractor's superintendents and foremen and carefully plan the entire operation. Some of the details which should be given cooperative attention are mentioned in the following paragraphs.

Continuity of operations should be discussed. One of the essentials of a good plant-mix asphalt paving operation is uniformity and continuity. Good riding qualities are easier to obtain in a continuous operation than in a start-stop operation. Quality suffers when the paver stops. Any mix in or under the paver cools in proportion to the delay, making it difficult or impossible to spread to the same surface elevation or roll to the same density as that placed with correct temperature.

Nothing is gained by operating the paver at a greater speed than the plant can produce. When the paver is operated at a fast speed for a few minutes and then forced to wait for trucks, the working parts of the paver cool off and the remaining mix in the machine becomes stiff; related problems arise. When the paver resumes operation with the next load of material, all of the resisting forces have increased and the paver must overcome these forces before it can settle down to a smooth spread again. An intermittent operation will cause the mix trucks to bunch up at the plant. This results in erratic operation at the plant as well as at the paver. To minimize such disorderly operations, it is necessary for the paver to be operated at a speed in balance with the plant production. It is true that all stops cannot be avoided, however when plant and paver output are in balance, a large portion of the interruptions are eliminated and stops are held to a minimum.

Rolling procedures should be discussed. The Standard Specifications require the use of both steel wheel rollers and pneumatic tire rollers. This requirement permits a wide latitude in the choice of types and weights of rollers to be used. It is difficult to foresee at preconstruction conference time the job conditions that will exist at paving time, for which reason the understanding should be that when compaction requirements are not fulfilled, the types and/or weights of rollers shall be altered as a corrective measure.

Approach to Inspection

A joint responsibility exists between Contractor's supervision and the Project Engineer. The Engineer, as representative of the Highway Department and traveling public, has the responsibility of seeing that a high standard of workmanship is accomplished and that each phase of construction meets the specification requirements. The contract vests the Engineer with considerable authority which makes it his duty to be absolutely fair in his interpretation of plans and specifications. The Contractor must complete his work with the high standard of workmanship expected of him. Each should recognize and respect the position of the other.

Check List

As a part of the initial project planning, the discussions between the Engineer and the Contractor should result in mutual understanding of the following items:

1. Project personnel assignments,
2. Project records,
3. Equipment,
4. Public relations,
5. Detours,
6. Plans and special provisions,
7. General specifications,
8. Proceed and stop orders,
9. Inspection of materials,
10. Payment for work accomplished, and
11. Safety regulations

Additional items should be added to the list for particular types of projects with unusual work requirements.

EARTHWORK

Earthwork includes all the necessary operations connected with roadway excavation, structure excavation and backfill, ditch excavation, compaction, embankment construction and borrow excavation. Before start of work, the Engineer should:

1. Review the Project Plans, Special Provisions, Right-of-Way Agreements and other data for details pertaining to earthwork which may require special handling. Begin a preliminary check of earthwork quantities and decide how quantities will be measured for partial payments.

2. Review the soil profile and materials report, if available.

3. Review the status of utility relocation work. Advise the Contractor in writing of any changes which will affect his operation.

4. When required by the contract, obtain from the Contractor his detailed plan showing the design of shoring, bracing, sloping, or other provisions made for worker protection.

5. Discuss with the Contractor his schedule of earthwork operations, source of materials, equipment capacities and any potential hauling problems involving public traffic. Ensure that the Contractor's plan of operation is in accordance with any specified order of work and pollution control program.

6. Plan construction in accordance with the Contractor's work plan and schedule.

Special considerations of the Engineer and Inspector for roadway excavation include the following.

Slopes

The Engineer in charge of earthwork should review all stakes and see that missing stakes are replaced. In addition, he should:

1. Observe the operation and make sufficient measurements to determine that slopes are proper.

2. Make sufficient spot checks to determine that slope tolerances are being met.

3. Check the slope rounding for compliance with the contract. Decide whether additional slope rounding or contour grading should be performed while the top of slope is still reachable with the equipment.

4. Ensure that any special requirements for erosion control are being performed in accordance with the contract or recommendations.

5. Check all top of slope or toe of slope ditches to ensure that they will drain.

Slides

1. Examine slopes for areas of potential slides. Decide on any corrective action to be taken. For major problems, request the Materials and Testing Division to make a detailed analysis and recommendations.

2. If slides have occurred, conduct investigations to determine the probable cause. Decide on corrective work to be done. This will usually involve total or partial removal of the slide and may include flattening slopes, installation of horizontal drains and/or underdrains. For small areas, consider construction of bulkheads or retaining walls. For large areas, construction of benches to

reduce traffic hazards from falling material should be considered. When benches are constructed, access roads should be provided for future maintenance operations.

3. When corrective action is required, determine the method of payment and prepare and process a change order when extra work is involved.

4. Decide on where the material removed from slides is to be deposited. When practicable, utilize all material in embankments or for flattening slopes or contour grading.

5. Make adequate measurements and keep records of slide removal operations to support the particular method of payment which has been agreed upon. This must include records of disposal areas.

6. Before and after photographs of the slide area must be taken for project records.

Hauling of Materials

Requirements for hauling materials are covered under various sections of the contract. The Contractor must adequately control dust and spillage of material from hauling units.

Unsuitable Material

Unsuitable material is that material which will adversely affect the stability of the roadbed. Material which is unsuitable merely because of a saturated condition may be satisfactory for use in embankments when dried. Duties of the Engineer with respect to unsuitable material include the following:

1. Examine for possible unsuitable material at all ground areas upon which embankments are to be constructed.

2. Advise the Contractor of the areas and depths of material.

3. When necessary to remove unsuitable material, decide on the method of payment for excavation and disposal prior to removal.

   a. If payment is to be at contract prices, record adequate measurements for calculation of quantities.

   b. If payment is to be made as extra work, prepare and process a contract change order and keep the necessary extra work records.

4. Decide on disposal areas for unsuitable material and advise the Contractor accordingly.

5. Examine areas where unsuitable material has been removed and decide on any necessary drainage or other corrective action prior to backfilling.

6. Advise the Contractor of type of material which will be suitable backfill. Observe the operation to ensure compliance with specified backfill requirements.

7. In addition to routine data, record all pertinent discussion and orders to the Contractor with respect to unsuitable material.

Blasting

When blasting is required for roadway excavation, the Engineer should have special concern for the following safety considerations:

1. Observe the operation to determine whether specified procedures for storage, handling, and usage of explosives are being followed.

2. Ensure that the blasting foreman is familiar with and understands the stakes sufficiently well to avoid accidental placing of explosives beyond slope tolerances.

3. Order discontinuance of any method of blasting which leads to overshooting or is dangerous to the public or destructive to property or natural features.

4. Observe that warning signs prohibiting radio transmitting are posted. Also, signs to warn the traveling public of blasting operations must be posted.

5. Examine slopes for material which has been shattered or loosened because of blasting. Order the removal of such material.

EMBANKMENTS

Embankments are those fill sections where it is necessary to elevate the new road grade above the natural ground. Several factors are important during the supervision and inspection of embankment construction.

Embankment Foundation

Areas upon which embankments are to be constructed must be carefully examined by Field Engineers. Such examination is to include review of the materials report as well as on-site observation during clearing operations.

Look for seepage, springs, lush growth of vegetation in local areas, indicating ground water; trees and brush leaning downhill, indicating slippage of the surface mantle; rolling, hummocky terrain; and twisted trees or lack of vegetation in otherwise timbered areas, indicating a large slide.

When foundation problems are known during the project design phase, normally the contract will include treatment of such areas. When serious problems arise which are not covered under the contract, the Resident Engineer is to consult with the District Materials Engineer who in turn contacts Central Laboratory and the foundation section of Testing Division. Some of the common major problems encountered and types of solution frequently recommended are shown below.

1. The weight of the embankment displacing or consolidating material in the foundation causes settling. This condition is corrected by:

    a. Removal of the plastic foundation material if it is economically feasible.
    b. Placement of strut fills or buttress fills on either or both sides of the embankment to act as a counterweight and resist upward movement of foundation material adjacent to the embankment.
    c. Construction of the embankment at a controlled rate so that anticipated settlement will take place over a period of time and allow dissipation of hydrostatic pressures.
    d. Construction of surcharges on the completed embankment to accelerate settlement.

Settlement platforms, piezometers and levels are generally used to monitor rates of settlement for the foundation control techniques c and d, and are installed and used under the direction of the Materials and Testing Divisions.

2. Loss of stability occurs when the embankment forms a dam and impounds water, causing saturation. This type is usually identified by sloughing of part of the fill and is corrected by:

    a. Placing a filter material blanket over the area which is to receive embankment in order to provide drainage. Stripping of foundation material may be necessary.

b. Construction of ditches or underdrains at the upper side of the fill to intercept water. This method is effective only if the underdrain or ditch intercepts all the seepage water and provides for its removal.

3. The weight of sidehill embankment causes movement on a slippage plane in the underlying foundation. This type of embankment failure is characterized by the mass movement of a large portion of the fill. Corrections are made by:

   a. Construction of a stabilization trench through the slippage plane. Stabilization trenches are constructed in wet areas to intercept and remove water from deep unstable embankment. These trenches are often major installations involving large quantities of excavation, filter material and drainage pipe.
   b. Installation of horizontal drains to drain water from the slippage plane.
   c. Changing line or grade so that the roadway is actually in cut or on a smaller embankment, thus reducing overloading of the slippage plane.

Combinations of the above methods are often required for the most troublesome foundation problems.

Embankment Construction

The choice of methods and equipment for embankment construction are generally left to the Contractor's discretion provided that methods are chosen which insure uniform material, proper layer thickness, adequate moisture content and uniform compaction. The amount of inspection needed will depend primarily upon the size of the project, nature of the soils, and the rate at which material is being placed. Inspection personnel should review the area over which construction operations will proceed and should reset any stakes that have been disturbed or destroyed.

Embankment construction generally begins with filling the low areas, washes or holes first and then bringing up the first lift of embankment. The first lift of embankment spread over low areas may be slightly dished, but the intent is to eventually provide an embankment layer approximately parallel to the finished grade with each successive lift of embankment. Frequent checks should be made to see that the work conforms to the proper cross section, that roots or other organic materials are being removed and properly disposed of, that drainage facilities are open and that the embankment site is in the best condition possible to provide maximum runoff from storms.

The construction hauling equipment must be routed in different paths when hauling to and from the embankment placing site. This hauling procedure is particularly necessary when hauling over expansive clay to avoid ruts or over compaction. Uniform compaction is ordinarily best obtained when the embankment layers are relatively thin, usually not more than 20 cm in loose depth.

During embankment construction, the Engineer should:

1. Observe the placement of material to determine that layer thicknesses are as specified. Ensure that all voids between rocks in each layer are filled with earth or other fine material.

2. See that rocks, broken concrete, or other solid materials which are larger than 10 cm (4 inches) in greatest dimension are not placed in areas where piles are to be placed or driven.

3. Ensure that benching into existing material is adequate for proper keying of embankment material to original ground, during hillside construction or where the section changes from embankment to excavation.

4. Observe any end dumping operation and order such method to cease as soon as normal embankment methods can be used.

5. Make the same observations for embankment slopes as previously covered in this section for slopes in excavation.

6. Ensure that contractual requirements relative to surcharges and settlement periods are met.

Compaction

Supporting power of soils is directly affected by compaction. The lower the compaction, the lower the supporting power when the material is saturated with water.

It is the Contractor's responsibility to obtain the required compaction by any means that he desires and the Engineer should not direct the compaction operation.

Following are some of the duties of the Engineer with respect to compaction:

1. Review the contract to determine which compaction test method is applicable. Measure the compaction to detemine whether the specified relative compaction has been attained. The frequency of such tests will depend on the Contractor's operation. This will be decided by the Engineer, taking into account the uniformity of the material and the particular operation. Generally, if the operation is uniform and well within specifications, testing frequencies may be gradually decreased. For non-uniform operations and/or borderline results, testing frequencies are to be increased.

2. Observe the work of compaction testing personnel to insure that testing is in accordance with the requirements of the contract. Advise them of any special requirements which may not be specifically covered by the test method.

3. If the Contractor elects to excavate original ground material to facilitate compaction, examine the underlying material before the area is backfilled. Decide whether the layer of material below the excavated material should be compacted.

4. Ensure that material which contains excessive moisture is dried sufficiently to attain the required compaction and that the resulting embankment will be in a firm and stable condition.

Optimum Moisture

When the proper amount of moisture is uniformly distributed through the embankment layer, little difficulty will be encountered in obtaining proper compaction, provided the thickness of the layer does not exceed the capabilities of the roller being used. It is required that the moisture content be at optimum or very near optimum at all times. The Contractor is required to provide the proper watering equipment to secure proper moisture distribution throughout the embankment material.

Blending and mixing of the water into the soil should be thorough. Large clods or lumps must be broken down to insure a uniform moisture distribution and compaction. Plastic clays may require heavy plowing or disking of the soil to satisfactorily blend moisture; however, in extreme cases mechanical mixers may expedite the work.

Several light applications of water are more desirable than one heavy application. The frequent light applications will allow better moisture percolation through the soils and provide less opportunity for the soil to become rutted and muddy. Care must be taken when adding water to a layer of soil to avoid overlapping or to allow gaps between successive passes of the water wagon. Excessively wet or dry stretches are undesirable. The water truck driver should work progressively from one side of the fill across to the other side to avoid having wet or dry streaks in the center or edges of the embankment.

The following method is a Rule of Thumb for determining the approximate optimum moisture content for generally cohesive or plastic soils. It is a guide to help inspect areas until proper tests can be taken.

> "Optimum moisture content may be approximated by rolling a soil sample into a ball about the size of a golf ball. The soil should be rolled as tight as possible. The ball should then be placed between the thumb and first two fingers of the hand, and pressure applied. If the ball more or less shatters into several fragments of rather uniform size, the soil is very close to optimum moisture. If the ball flattens or pancakes without breaking up, the soil is over optimum. If the ball "weeps" in the hand when held for a few minutes, it is also over optimum. If it is difficult to roll the soil into a ball or cannot be balled at all, it is under optimum."

Rock Embankment

The Standard Specifications provide varying construction methods when soils with different characteristics are encountered. For instance, embankments constructed wholly or partly from rock fragments offer a different challenge to the road contractor, because of the size, lack of fine material, and the general nature of rock embankment construction. Lift thickness should be kept to the approximate average size of the larger rocks. Hauling vehicles should dump the rock fragments adjacent to or near the final position. A dozer or another piece of leveling equipment will maneuver the pile of rock into its proper position at the correct lift over the embankment. By exercising skill, the coarse and fine materials can usually be distributed so that void spaces will be filled with small stones and earth to make the embankment as dense and compact as possible. Material must never be end dumped over the edge of an embankment if there is any other method. However, when end dumping is the only method that can accomplish embankment construction over poor foundation soils this work should be accomplished by dumping on top of the layer being built, then shoved ahead into place with a bulldozer.

The last 45 centimeters of rock embankment below subgrade elevation must be constructed from the finer materials.

Excessively large rocks should be broken into smaller pieces and these pieces uniformly distributed throughout the fill. When an excessive quantity of large rock occurs, it is best to place these rocks near the toe of fill slopes. They should not be placed in piles but separated, then the remaining embankment lifts can be properly constructed in layers around these larger size rocks. If rocks and boulders that are of such a size and shape and can be placed in reasonably uniform layers to permit rolling, rolling should be done with a smooth-wheel roller or vibrating compactor. Sheepsfoot, or pneumatic rollers do not perform well on rock embankments. When a large percentage of the larger sized rocks are present, moisture and density controls of the embankment are impractical.

Embankment Over Swampy Areas

Special construction techniques may be needed to construct embankments over swampy ground. The lift thickness may be increased to a size capable of supporting the hauling and spreading equipment for the first lift only. It is the Contractor's responsibility to select the type of equipment and method of construction which will least disturb the soft foundation, but maintain the proper compaction in succeeding lifts of embankment.

Methods of traversing swampy areas generally consist of totally excavating the undesirable material and properly disposing of it, or providing a sufficient weight of embankment (surcharge) that will displace the swampy material when the depth of the swamp is too great to excavate. The soft ground may be bridged with an embankment composed of a wide bottom and very flat side slopes.

Swampy areas or soft areas are generally shown on the plans with the specific method of construction outlined in the special provisions; however, all low, poorly drained or swampy areas that do not show on the plans must be checked

for their ability to support the planned embankment. Consult the Central Laboratory to determine if questionable areas will have the strength to support the embankment.

Embankment at Structures

The contract Special Provisions will usually contain a section which designates the type of material to be used for backfill at structures. It is important that the Contractor be required to use selective practice in obtaining material for embankments at bridge ends, culverts and similar structures, even though special provisions may not designate the type of material to be used.

Piers, bents, and culverts may be pushed out of line and subjected to undue stresses because of improper backfilling. Backfill is to be compacted uniformly in layers brought up equally on all sides of the structure to reduce unequal earth pressures on the structure.

1. Inspect structures prior to backfilling. Advise the Contractor when backfilling can begin and note such approval in diary.

2. Test structure backfill material for compliance with specified quality requirements.

3. See that any required strutting or bracing is in place prior to backfilling. See that headers are removed if used in connection with shaped bedding.

4. Observe the backfill to ensure that it is being brought up uniformly and in the specified layer thickness.

5. Prohibit use of any compaction equipment or methods which may displace or damage structures or otherwise adversely affect foundations or adjacent embankments.

6. Measure the degree of compaction for compliance with the contract. The frequency of such testing will depend on Contractor's operation but must be sufficient to ensure that requirements have been met.

7. Ensure that a cover of compacted impervious material is placed where erosion of backfill material or seepage through it may occur. This is particularly important at inlet areas.

8. Ensure that pervious backfill material is placed as specified.

9. As soon as backfill is finished, complete the quantity calculations and note in diary.

BALANCING EARTHWORK QUANTITIES

Most roadway projects involve a combination of both excavation and embankment quantities. Usually the designer attempts to "balance" these quantities so that the excavation from the roadway prism will furnish the exact amount of material required for embankments. When the earthwork is not balanced, there will be need for either special borrow excavation or need to dispose of surplus material.

Even when earthwork design is balanced, there are several uncertainties which may change conditions during construction.

1. Subsidence -- the original ground under high fills may experience more subsidence than expected, thus requiring more fill material.

2. Slope tolerances -- slight variations from the design slope in deep cuts and high fills can have a great effect on quantities.

3. Construction changes -- any necessary changes in vertical or horizontal alignment during construction will change earthwork quantities.

4. Shrinkage or swell -- designers have estimated the expected amount of shrinkage or swell that will occur when excavated material is placed and compacted in embankments. In actual operations, these allowances may be more or less than planned, and will affect earthwork balancing.

There is need for the Engineer to anticipate these conditions and plan accordingly for disposal of surplus material or obtaining additional borrow excavation.

Surplus Material

The Engineer's responsibility for surplus material and actions related thereto will vary considerably depending on the terms of a particular contract. In general, for those contracts wherein payments for roadway excavation includes payment for construction of embankments, the Engineer should know as early as possible whether or not there will be a surplus (or deficiency) of material. For contracts which provide separate payment for embankment, the Engineer's responsibility with respect to surplus extends only to ensuring that the conditions of the Standard Specifications are satisfied.

When the amount of any unplanned surplus is known, plans should be made for its ultimate disposal. The Engineer should not order or permit any disposal before embankments are complete, nor should the Contractor be relieved of his obligation to complete all embankments before disposing of material. The action to be taken for unplanned surplus will vary, depending on whether the project already has a planned surplus with available disposal areas or whether it was planned as a balanced project with no readily available or economically feasible disposal sites. Factors to be considered include the location of surplus within the project and whether or not surplus can be disposed of within the right-of-way. Surplus material may be placed within or alongside an embankment or between embankment and right-of-way lines. Remember that such placement is subject to compaction and other requirements for embankment construction.

Deficiency of Material

When the Engineer's analysis of quantities as noted above indicates a deficiency of embankment material, determine whether the shortage is to be made up by increasing excavation (local borrow) or by obtaining borrow from outside sources.

Sometimes it is possible to flatten backslopes or widen ditches in cuts to obtain additional material. When this is not practical, it may be necessary to obtain a borrow source from outside the right-of-way. Adequate measurements and records are to be made to support payment.

CULVERTS

Properly designed and installed culverts are essential to satisfactory service of the roadway facility. Design considerations include both size and strength of culverts. The size and slope is based on hydraulic considerations and expected discharge. The strength requirements are based on height of fill and expected loading.

Ordinarily, culvert design as shown on the plans will have been performed by drainage specialists -- and should be adhered to. But the Engineer should look for and recognize field conditions which may warrant changes in design.

The Engineer is principally responsible for good culvert installation practices. This requires:

1. Locating structures properly to fit the alignment and grade of drainage channels.

2. Installing adequate length for conditions.

3. Excavating accurately to line and grade.

4. Providing a uniform and stable foundation.

5. Handling the material properly.

6. Assembling the structure properly.

7. Using suitable backfill material.

8. Placing and tamping backfill thoroughly.

9. Protecting the structure against concentrated loads during construction.

Excavation for Culverts

The trench excavated for culvert installations must be shaped to fit the bottom of the culvert to proper line and grade.

When a bulldozer or heavy earth-moving equipment is used to excavate for structures, it is often economical to dig a wide, flat base. This is satisfactory if the backfill is carefully tamped under the lower portions of the culvert.

When excavating by hand, lines should be strung to designate the boundaries of excavation and at least one string line should be set parallel to the grade-line which will assist in maintaining line and grade.

If the structure is to be installed in a trench, the trench should be kept as narrow as possible, but sufficiently wide to permit tamping under haunches. Generally, the width of the trench should exceed the outside diameter of the culvert by not less than 30 cm nor more than 60 cm.

Foundation

When the excavated grade-line for the drainage structure crosses both soft and hard spots, the foundation should be made as uniform as possible to prevent uneven settlement and damage to the structure. If the hard spots are rocks, they should be excavated at least 30 cm below grade-line and backfilled with suitable material. When soft material is encountered, it must be removed to a width at least twice the diameter of the culvert and replaced with suitable material.

Camber

At locations where culverts are placed under high fills, the plans and specifications may call for a specified amount of camber (slight arching up in the middle). This anticipates greater settlement along the center of the embankment and prevents ultimate development of a sag in the culvert. These special instructions should be followed.

Backfill

The strength of any structure is largely dependent on proper backfilling. Selected drainage backfill material is preferred, but most local fill material can be used provided it is carefully placed and compacted.

Backfill material should be free from large rocks and hard lumps of dirt. Cinders or earth containing a high percentage of organic material should not be used. Granular material containing a small amount of silt or clay is ideal since it makes dense and stable backfill.

Fill material should be placed in layers about 15 cm deep and each layer thoroughly tamped. Tamping can be done by hand or by mechanical equipment depending on field conditions.

Compaction of fills by puddling or jetting is not recommended except for cohesionless, sandy-gravel material. With most other soils containing clay, puddling will not work satisfactorily and tends to produce a permanently unstable condition.

Protection During Construction

During backfilling around and over a structure, and during other earthmoving operations, the load of heavy equipment may exceed the design limitations of the structure and cause damage.

It is advisable that the structure be covered with at least 30 cm of fill material before direct loads are applied. This may call for a temporary hump in the embankment at the structure until the rest of the embankment has been raised to the same grade elevation.

PAVEMENTS

Three general types of surfacing commonly are used in highway construction -- portland cement concrete, bituminous, and gravel surface. Discussion in this Manual is limited to bituminous pavement. The construction requirements and procedures for four different types of bituminous pavements are discussed:

- Bituminous plant mix,
- Bituminous road mix,
- Bituminous surface treatment, and
- Penetration macadam.

Bituminous pavements are composed of compacted aggregate and bitumen. The aggregate performs three functions. It transmits the load from the surface to the base course, takes the abrasive wear of the traffic and provides a nonskid surface when properly constructed. The bituminous binder(bitumen) holds the aggregate together, preventing displacement and loss of aggregate, and provides a waterproof cover for the base.

Bituminous surfaces are particularly adaptable to stage construction. Additional courses can be added to existing pavements to provide further reinforcement if the loads or density of traffic increases. The flexibility of bituminous wearing surfaces permits slight adjustments caused by settlement of the subgrades without detrimental effects. Bituminous wearing surfaces provide a resilient, waterproof medium that protects the base course from wear and traffic.

Relatively thin bituminous wearing surfaces lack appreciable beam action to carry wheel loads over weak spots in the subgrade. For this reason, the subgrade must have an adequate, uniform bearing strength and the base course must have adequate thickness, bearing capacity and cohesion.

Types of Pavement

The type of pavement and the dimensions of the surfacing materials will be clearly shown on the Typical Section sheet of the contract plans. The characteristics of the various types are described below.

Bituminous Plant Mix

Hot bituminous plant mix is a carefully proportioned and controlled mixture of bitumen and aggregate, premixed and constructed with a paving machine. Often called bituminous concrete, it is the highest type of bituminous surface.

Bituminous Road Mix

Bituminous road mix consists of bitumen and aggregate constructed on the roadway by mechanical mixing and spreading and compacting the resulting mixture. Controls are not as good as for plant mix, but the surface usually is more durable than bituminous surface treatment.

Bituminous Surface Treatment

A bituminous surface treatment consists of one or more applications of bituminous material on a prepared surface, with each application covered with aggregate surfacing material.

Penetration Macadam

Penetration macadam consists of a pavement surface of well-graded washed gravel or broken stone, on a previousy prepared base course, penetrated with hot applications of bituminous binder.

Types of Bituminous Material

Several types of bituminous material (bitumen) are used in highway construction. They are briefly described below.

Asphalt Cement

Asphalt cement is usually used in hot-mix pavements. It is usually solid at temperatures of 25°C (77°F). To make it fluid enough for mixing with aggregate or for spraying, asphalt cement must be heated to a temperature ranging from 135°C (275°F) to 177°C (350°F). One disadvantage of asphalt cement is that adequate heating equipment may not always be available. The various penetration grades are suitable for different uses, including plant mixes, penetration macadam and surface treatment.

Asphalt Cutback

The different types and grades of asphalt cutbacks may be used with various climatic conditions for different types of pavements. The cutter-stock evaporates, leaving asphalt cement as the active bonding and water-proofing agent. Prevailing atmospheric temperatures during construction are factors that must be considered in selecting the grade of asphalt cutback. Lighter grades are usually used in cool weather. If the preferred grade of a given type of cutback is not available, a comparable grade of another type may be substituted. For example, RC-70 may be used instead of MC-70 or RC-3000 instead of MC-3000 without seriously affecting the finished structure. Light grades of asphalt cutback may be produced in the field by adding solvents to asphalt cement or to heavier grades of asphalt cutbacks.

Asphalt Emulsions

The mixing grades of asphalt emulsions can be mixed with damp aggregate with little or no heating. Recommended usage is dependent on the setting rate and mixing ability. Emulsions are used for surface treatment, for road and plant mixes and for crack filling.

Paving Tars

Since tars will not dissolve in petroleum distillates, they can be used in areas where asphalt would be unsuitable, such as refueling aprons of airfields where petroleum distillates are likely to be spilled. Because tars have greater penetrating qualities than asphalt, they are preferable when penetration is critical. Hot tar mixes are used for plant mixes, surface treatments, penetration macadams, crack fillers, and similar uses. Road tar cutbacks are used for patching mixes, surface treatments and road mixes. Open flames must never be used near storage tanks and drums, as road tar cutbacks are highly flammable. Tars are more susceptible to temperature changes than asphalt. They become soft at high temperatures and brittle at low temperatures.

Preparing Asphalt Mixtures

Asphalt mixtures are composed of asphalt cement and aggregates, both crushed and uncrushed. All mixtures make use of local aggregates when available. It is the standard practice of all Highway Administrations to make the best use of local aggregates. This is accomplished through research and development by determining ways and means of using each type of aggregate as well as their individual capabilities. Then these materials will produce the best possible product for highway construction and reduce maintenance costs.

Bituminous concrete is the highest type of bituminous pavement. The construction of bituminous concrete is governed by provisions of Section 400 of the Standard Specifications.

Bituminous concrete can be used for the manufacture of base courses, surface courses, overlays, leveling courses and patching material.

Bitumen Content Determination

The Marshall Method is used to determine the optimum bitumen content of hot mix pavements where stability and durability are required to withstand the action of high pressure tires such as trucks, etc. A modified version of this test is used to determine the optimum bitumen content for cold mixes.

These tests are made in laboratories and results will be furnished to the Field Engineers.

Estimating Material Requirements

The contract plans usually identify the estimated quantities of surfacing materials required for the project. These quantities are based on estimated rates of application, and quite often there is need to make changes in the field. Engineers should be familiar with these procedures so they may verify actual material quantities needed by the contractor.

Bitumen Application

The rates of application for bituminous materials are usually expressed as liters per square meter -- and total requirements expressed in barrels.

The formula for quantity of bituminous material is:

$$B = \frac{A \times R}{159} \times 1.05$$

where:

B = barrels of bituminous material
A = area (sq. meters) of application
R = rate of application (liters per square meter)
159 = conversion (liters per barrel)
1.05 = handling loss factor, an allowance for about 5% shrinkage during the handling.

The surface area is computed by:

$$A = L \times W$$

where:

L = length of application (meters)
W = width of application (meters)

Ordinarily, the width (W) will be the same as the surface width -- but in the case of prime coats and surface treatment applications, an additional width of 30 cm should be provided on each side of the surface. The application should be 0.6 meter wider than the surface.

Example for prime coat computations:

L = 3,000 meters
W = 7 meters (surface) + 0.6 meter (border allowance)
R = 1.5 liters per square meter

$$A = L \times W = 3{,}000 \times 7.6 = 22{,}800 \text{ sq. meters}$$

$$B = \frac{A \times R}{159} \times 1.05 = \frac{22{,}800 \times 1.5}{159} \times 1.05$$

$$B = 225.8 \text{ or } 226 \text{ barrels}$$

Aggregate Application

The rate of application of aggregate usually is specified as kilograms per square meter. The formula for weight of required aggregate is:

$$T = \frac{A \times R}{1{,}000} \times 1.1$$

where:

T = metric tons
A = area in square meters
R = application rate (kilograms per square meter)
1,000 = conversion (kilograms per metric ton)
1.1 = handling loss factor for aggregate (an allowance for about 10% shrinkage).

Example for surface treatment aggregate cover:

L = 3,000 meters
W = 7 meters (surface) + 0.6 meter (border allowance)
R = 15 kilograms per square meter

$$A = L \times W = 3{,}000 \times 7.6 = 22{,}800 \text{ sq. meters}$$

$$T = \frac{A \times R}{1{,}000} \times 1.1 = \frac{22{,}800 \times 15}{1{,}000} \times 1.1$$

$$T = 376.2 \text{ tons}$$

Test Strips

In cases where rates of application are not specified, or where there is need to adjust specified rates, the unit quantities of bitumen and aggregate can be determined by a test strip. The weight of the aggregate, one stone in depth, required to cover one square meter is determined by spreading the aggregate to be used, one stone in depth, over a measured surface, weighing it, and computing the amount in kilograms per square meter.

Example:

A test strip with an area of 100 square meters was used to determine the quantities for a single surface treatment. Careful control was made of materials and handling losses were negligible. A check of materials consumed showed that 1475 kilograms of aggregate and 113.5 liters of bitumen were used. Based on previous experience an aggregate handling loss of 10% (0.10) and a bitumen handling loss of 5% (0.05) are expected. Find the tons of aggregate and barrels of bitumen required to make a double surface treatment on a road 7 meters wide and 10 kilometers long.

Rates of application:

$$\text{Aggregate} = \frac{1{,}475 \text{ kilograms}}{100 \text{ square meters}}$$

$$= 14.75 \text{ kilograms per square meter}$$

$$\text{Bitumen} = \frac{113.5 \text{ liters}}{100 \text{ sq. meters}}$$

$$= 1.14 \text{ liters per square meter}$$

$$\text{Area} = L \times W = 10,000 \times 7.6 = 70,600 \text{ sq. meters.}$$

Project quantities:

$$\text{Aggregate} = \frac{70,600 \times 14.75}{1,000} \times 1.1$$

$$= 1,145.5 \text{ tons}$$

$$\text{Bitumen} = \frac{70,600 \times 1.14}{159} \times 1.05$$

$$= 531.5 \text{ or } 532 \text{ barrels}$$

Penetration Macadam

The amount of bitumen required for penetration macadam is determined in the same manner as for other bituminous applications -- with consideration of area, rate of application and handling loss. The rate of bitumen is about 2.8 liters per square meter for each 2.5 cm of compacted thickness. For example, 5 cm of compacted thickness will require about 5.6 liters of bitumen per square meter of surface area.

To determine the loose volume of aggregate, the area to be paved is multiplied by the compacted thickness of aggregate and the compaction factor. The compaction factor is the ratio of the volume of loose aggregate to the volume of compacted aggregate. The compaction factor for a 10 cm loose layer of aggregate compacted to 5 cm is 2. If a 5 cm compacted thickness is desired and the compaction factor is 1.5, the loose thickness is 1.5 x 5, or 7.5 cm. The compaction factor can be determined in the field in relation to the angularity and roughness of the aggregate, the loose thickness of the layer, and the weight of the roller.

The formula for uncompacted volume of aggregate is:

$$V = A \times T \times CF \times 1.1$$

where:

V = loose volume of aggregate in cubic meters
A = area of surfaced area in square meters
T = finished pavement thickness in centimeters (compacted depth)
CF = compaction factor or ratio of loose depth to compacted depth
1.1 = aggregate handling loss factor

Example:

The specification data for a penetration macadam project are as follows:

L = 2 kilometers
W = 7 meters
T = 15 cm
CF = 1.5
R = 2.3 liters/square meter
Aggregate handling loss factor = 1.1
Bitumen handling loss factor = 1.05

Find the number of barrels of bitumen and loose cubic meters of aggregate needed to complete this project.

$$A = 2,000 \times 7 = 14,000 \text{ square meters}$$

$$B = \frac{A \times R}{159} \times 1.05 = \frac{14,000 \times 2.3}{159} \times 1.05$$

$$= 212.6 \text{ or } 213 \text{ barrels bitumen}$$

$$V = A \times T \times CF \times 1.1$$
$$= 14,000 \times 0.15 \times 1.5 \times 1.1$$
$$= 3,465 \text{ cubic meters aggregate}$$

Road Mix Pavement

Estimates of aggregates required for road mix are identical to requirements for penetration macadam pavements. The Modified Marshall Method should be used for determining the amount of bitumen required. On the basis of experience, approximately 2.3 liters of bitumen per square meter is required for each compacted 2.5 cm of pavement. The rate of application is based on the use of a well graded aggregate with 2.5 cm (1 inch) maximum particle size. The formulas for estimating quantities are identical to those used for a penetration macadam.

Plant Mix

The amount of plant mix material required for a given area is determined by multiplying the compacted volume by the unit weight of the compacted mix.

$$T = \frac{A \times T \times UW}{1,000}$$

where:

T = tons of material
A = area (square meters)
T = thickness (meters)
UW = unit weight (kilograms per cubic meter)

The unit weight for plant mix can be determined by the Marshall Method.

Example:

L = 1 kilometer
W = 7 meters
T = 5 cm
UW = 2,355 kilograms per cubic meter

$$A = 1,000 \times 7 = 7,000 \text{ square meters}$$

$$T = \frac{7,000 \times .05 \times 2,355}{1,000}$$

$$= 824.25 \text{ or } 825 \text{ tons}$$

Methods for determining the proportionate amount of each material in the plant are described in the example below.

Given:

Requirements	=	825 tons plant mix
Aggregate blend	=	50/40/10
		50% coarse aggregate
		40% fine aggregate
		10% mineral filler
Bitumen content	=	6% by weight

Solution:

Total aggregate percent by weight = 100 - 6 = 94% of the total mix.
Coarse aggregate = 0.94 x 50% = 47.0% by weight of the total mix.
Fine aggregate = .94 x 40% = 37.6% by weight of the total mix.
Mineral filler = 0.94 x 10% = 9.4% by weight of the total mix.

To convert to tons the required tonnage of plant mix is multiplied by the percentage of each component of the mix. The results should be adjusted so that the sum of the tonnage of components is equal to the required tonnage of plant mix.

Coarse aggregate = 800 x 0.47 = 376.0 tons
Fine aggregate = 800 x 0.367 = 300.8 tons
Mineral filler = 800 x 0.094 = 75.2 tons
Bitumen = 800 x 0.060 = 48 tons
TOTAL = 800 tons

CHAPTER IV

BRIDGE CONSTRUCTION

This chapter is directed to those functional responsibilities of the Resident Engineer and Inspectors related to bridge construction items. Included are:

- Reinforcing steel,
- Welding,
- Pile driving, and
- Concrete.

These items are not all-inclusive of responsibilities -- but they represent the major significant items. Reference should be made to Section 500 of the Standard Specifications for criteria and requirements related to other miscellaneous items.

REINFORCING STEEL

Steel reinforcing bars are a common requirement of all bridges with concrete superstructure, substructure or foundation. It is essential that these bars be carefully inspected and handled.

REINFORCEMENT
AASHTO M31 GRADE 40
STANDARD HOOK DETAILS

180° HOOK

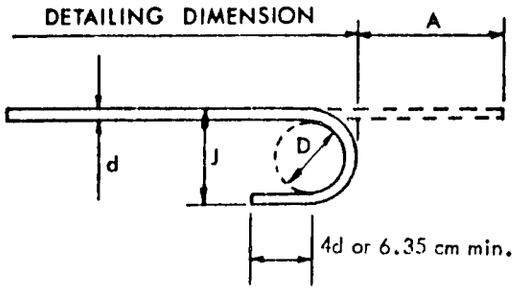

Min. D = 5d for No. 3 through No. 11
Min. D = 10d for No. 14 or No. 18

BAR SIZE NO.		A	J
In.	Mm.	Cm.	Cm.
3	9.52	13	7
4	12.70	15	9
5	15.88	18	11
6	19.05	20	13
7	22.22	23	16
8	25.40	25	18
9	28.65	30	20
10	32.26	33	23
11	35.81	36	25

90° HOOK

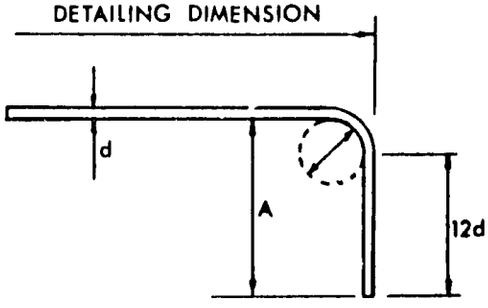

Min. D = 6d for No. 3 through No. 8
Min. D = 8d for No. 9, 10, 11
Min. D = 10d for No. 14 or No. 18

BAR SIZE NO.		A
In.	Mm.	Cm.
3	9.52	15
4	12.70	20
5	15.88	25
6	19.05	30
7	22.22	36
8	25.40	41
9	28.65	48
10	32.26	56
11	35.81	61

90° STIRRUP HOOK

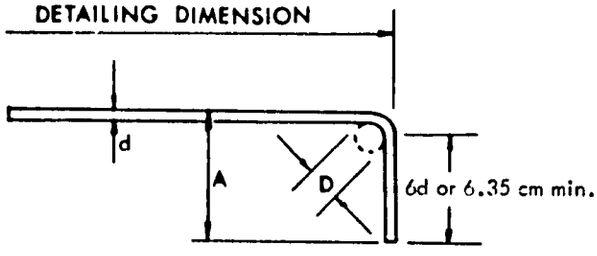

BAR SIZE NO.		A
In.	Mm.	Cm.
3	9.52	10
4	12.70	11
5	15.88	15
6	19.05	17

Note: When supporting bars are used, stirrup hooks may be bent to not less than the diameter of the supporting bars.

REINFORCEMENT

AASHTO M31 GRADES 60 and 75

STANDARD HOOK DETAILS

180° HOOK

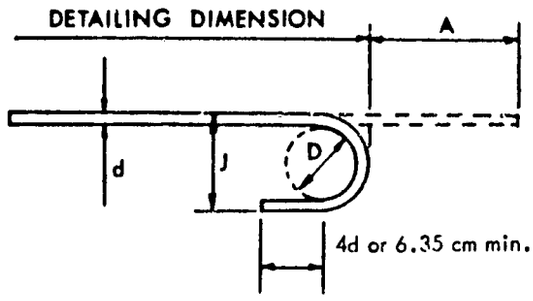

Min. D = 6d for No. 3 through No. 8
Min. D = 8d for No. 9, 10, 11
Min. D = 10d for No. 14, 18

BAR SIZE NO.		A	J
In.	Mm.	Cm	Cm
3	9.52	13	8
4	12.70	15	10
5	15.88	18	13
6	19.05	20	15
7	22.22	25	18
8	25.40	28	20
9	28.65	38	29
10	32.26	43	32
11	35.81	48	36

90° HOOK

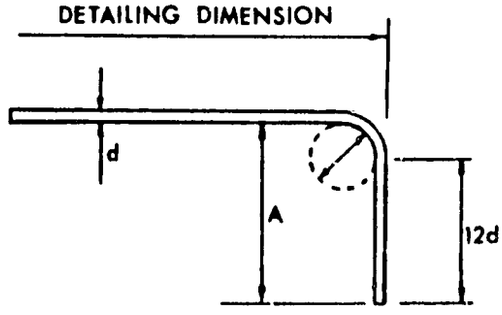

Min. D = same as 180°

BAR SIZE NO.		A
In.	Mm	Cm
3	9.52	15
4	12.70	20
5	15.88	25
6	19.05	30
7	22.22	36
8	26.40	41
9	28.85	48
10	32.26	56
11	35.81	61

90° STIRRUP HOOK

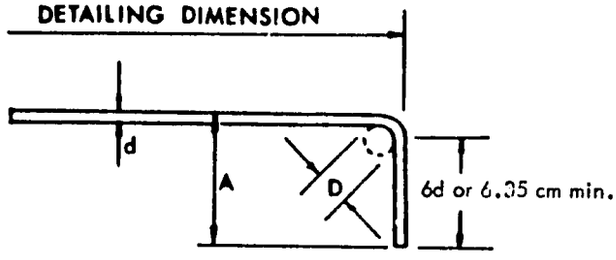

BAR SIZE NO.		A
In.	Mm	Cm
3	9.52	10
4	12.70	11
5	15.88	15
6	19.05	17

Note: **When supporting bars are used stirrup hooks may be bent to not less than the diameter of the supporting bars.**
Any hook shown on the plans and not dimensioned otherwise will conform with above tables.

Inspection Prior to Placing

The responsibilities of the Resident Engineer and his staff are as follows:

1. Visually check for damage and proper storage. Steel should not rest directly on the ground. Check for any kinking or bending of the steel not called for on the plans.

2. Inspect bending details for conformance with specifications. Refer to the standard bending details in this section. Also examine the bars to detect damage from kinks or cracking of the steel on surfaces of the bends. Grade 60 is particularly susceptable to this type of damage.

3. Observe the steel for general cleanliness. It should be checked for loose mill scale, excessive rust or other deleterious coatings. Decide whether any such coating will destroy or reduce bond and advise the Contractor if cleaning will be necessary.

4. Check some of the ends of larger bars to detect evidences of piping which is a cavity in the core of the bar. Also check for such rolling defects as scabs, seams and laminations.

If the above checks are made and the steel is found to be satisfactory, it may be incorporated into the work. It may not be necessary to obtain field samples of the material for testing prior to use unless there is some reason to doubt the quality of the reinforcing steel. Random sampling and testing should be done as required by the contract and specifications.

Inspection During Placement

Final responsibility for insuring that reinforcement is placed as specified rests with the Resident Engineer. Construction forces must therefore check for the following items.

1. After the reinforcement is in place in the forms, determine if it is accurately placed in conformance with sizes, dimensions, locations, clearances, and coverages as required.

2. Determine that all reinforcement is securely wired at intersections, with No. 14 or 15 gauge wire, that it is held in place securely, and that bundle bars are tied at proper intervals. The reinforcement must be placed in the forms in such a manner that it will not be necessary to add bars or adjust bars during the placing of concrete.

3. On cast-in-place, prestressed, post-tensioned structures, it may be necessary to adjust or relocate reinforcement to conform with the prestressing system selected by the Contractor. Also, it may be necessary to place additional steel. These details are shown on drawings submitted by the Contractor and checked and approved by the Highway Bridge Division. Use the approved prestressing details to check the placement of reinforcement so that required clearances to the tendons and anchorages, etc. are provided. In particular, check to see that grillages at end anchorages are placed properly.

4. When mesh reinforcement is used, observe that it is rolled flat and held firmly in place during placement of concrete or air-blown mortar.

5. After the reinforcement is placed, it should again be checked to insure that it has no coating of any kind such as form oil, dust or any substance which would destroy or reduce bond.

6. Caution: DO NOT PERMIT WELDING OF ANY TYPE ON REINFORCING STEEL UNLESS IT IS SPECIFICALLY PROVIDED FOR BY THE PLANS OR SPECIFICATIONS.

Splicing

Splicing of bar reinforcing steel is done by lapping bars, or by mechanical means. Splicing of mesh reinforcement, reinforcing wire or plain bars is generally done by lapping.

1. Inspect all lapped splices to insure that the minimum length of lap required by the plans and specifications is provided. Notice in particular that the size of a bar, and the position of the bar in the structure will determine the length of lap required. Check to see that the laps are securely wired to maintain the alignment of the bars. Lap splices of mesh reinforcement are to be tied securely with wire to prevent distortion of the mesh.

2. Mechanical splicing of bar reinforcing steel. The requirements for this type of splicing should be studied carefully to insure proper inspection and testing. The Materials and Testing Division should be contacted for advice and assistance in inspection and testing of this type of work.

WELDING

Welding is required on almost all bridge construction projects. An understanding of the welding symbols as used on the plans is a necessity for any Project Engineer or Inspector supervising this part of the construction of a project.

Most field welds are usually simple fillet welds while the more complicated welding is done in the fabricating shop. It is the general practice to keep field welding to a minimum because conditions in the field make welding far more difficult than in the shop and Contractor's welders are usually less skilled than shop welders.

All welds should be closely inspected for size, length, and shape. A good fillet weld should be slightly rounded outward from the root, never rounded inward with a concave surface.

Particular attention should be paid to the filler material or welding rods. These should be low-hydrogen rods conforming to Section 510.23 of the Standard Specifications. These rods are marked and are larger and more heavily coated with flux than ordinary welding rods. The welding characteristics of these low-hydrogen rods are different from ordinary rods but once the operator has learned to use them, welds can be made much faster.

The following sheets show the basic and supplemental weld symbols.

PILE DRIVING

A working knowledge of soil classification, soil characteristics, mechanics of pile hammers, dynamic and static loads, specifications, plan reading, welding, and materials inspection are some of the desirable prerequisites for a proficient pile driving Inspector.

Pile driving inspection involves the use of sound judgment, since the Inspector must determine the acceptability of the pile before it is placed in the leads, observe the performance of the hammer, determine when pile damage or breakage has occurred or is likely to occur, and must make a judgment regarding acceptable penetration and bearing capacity.

Safety

Since pile driving is hazardous, the Engineer and the Inspector should take every precaution to reduce the potential for accidents. They should always wear a hard hat and hard-toed shoes.

There is danger when operating near power lines, particularly high voltage lines. It is advisable to check with the power company regarding "safe distance" when it is necessary to drive piles in the vicinity of their lines, or

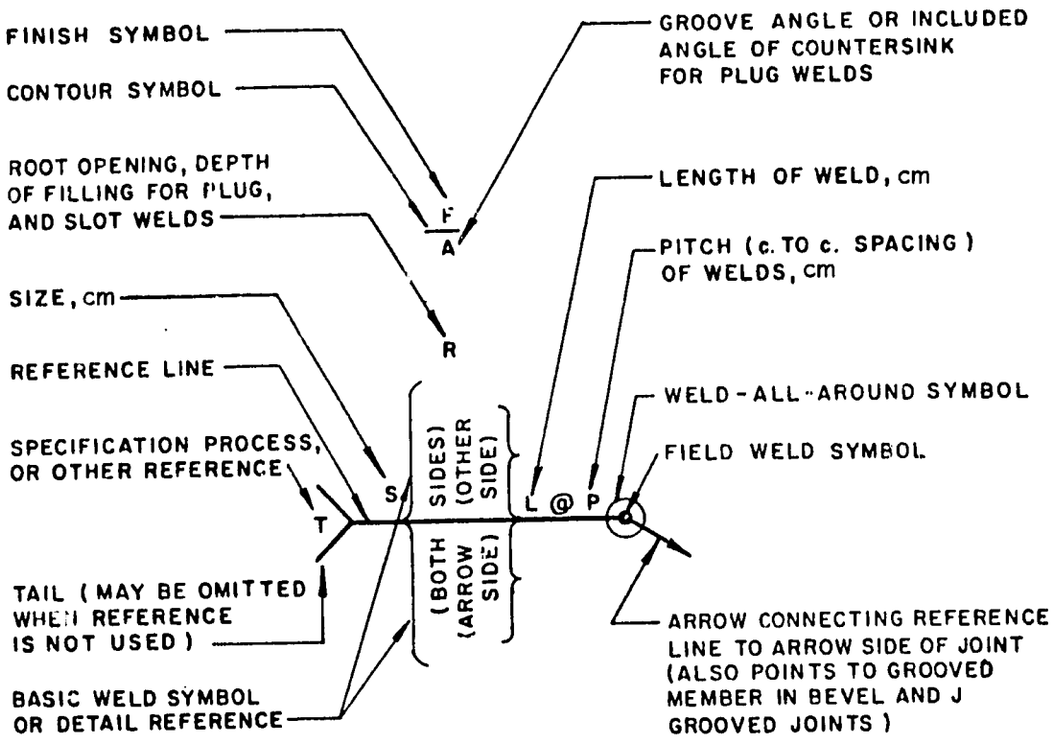

STANDARD LOCATION OF ELEMENTS OF A WELDING SYMBOL

Symbols for welded joints recommended by the American Welding Society. Size, weld symbol, length of weld, and spacing must read in that order from left to right along the reference line, regardless of its orientation or arrow location. The perpendicular leg of symbols for fillet, bevel, J, and flare-bevel groove welds must be at left. Arrow and Other side welds should be the same size. Symbols apply between abrupt changes in direction of welding unless governed by the "all around" symbol or otherwise dimensioned.

When biling of detail material discloses the identity of the far side of a member (such as a stiffened web or truss gusset) with the near side, welding shown for the near side shoul also be duplicated on the far side.

BACK	FILLET	PLUG OR SLOT	GROOVE OR BUTT						
			SQUARE	V	BEVEL	U	J	FLARE V	FLARE BEVEL

BASIC WELD SYMBOL

WELD ALL AROUND	FIELD WELD	CONTOUR	
		FLUSH	CONVEX

SUPPLEMENTARY WELD SYMBOLS

to have the power shut off temporarily when this is possible. Electricity may "jump" several feet, especially in high humidity.

Unprotected excavations are a danger potential at all times, but particularly so during pile driving because of the intense vibrations set up by the pile hammer and transmitted through the pile into the ground. Insist on well constructed cofferdams or adequate back-sloping of cuts before entering an excavated area.

Pile hammers, particularly when combined with long leads, long booms, and long, heavy piles, provide potential for tipping the crane or buckling the boom. The Inspector should be constantly alert to the possibility of an accident when these conditions exist, and should stay clear of danger areas as much as possible.

Observe the pile closely during driving for any evidence of failure. Many failures can be readily detected in time to avoid a disastrous accident, and some can be detected in time to save the pile. The head of a timber pile may start splitting; if the penetration and bearing are satisfactory, it may be prudent not to insist on substantial refusal rather than continuing the driving with potential danger.

Timber piles with knot clusters, bends, bows or other irregularities, may fail suddenly and without warning. It is advisable to be alert to these conditions and make proper allowances for them.

Use of Survey Sheet

The survey sheet or sheets attached to the bridge plans, includes soils information in the form of borings and soundings. This information, although intended primarily for the designer, can be very beneficial to the Inspector and to the Contractor. The pile driving Inspector should study it carefully.

Careful study of the soils information will indicate depths at which hard driving will likely be encountered, where rocks and boulders may cause problems, the depth of weak soils which should be penetrated, and layers of dense material which may be of adequate depth to support pile loads without the necessity of driving through them.

Pile Definition

This section will cover only bearing piles, which for our purpose includes pile bents, test piles, foundation piles, and trestle piles, but not sheet piles. For bridge structures, piles are used whenever the soils at and below the elevation of the bottom of the footings are too weak or too compressible to provide a stable foundation, where there is danger of erosion or scour such as in streams, or where there is a thrust against the walls or columns which might result in horizontal movement.

Types of Support

Piles are supported by end-bearing on rock, or other dense formations such as gravel or hard pan; or by friction between the surface of the pile and the adjacent soil; or by a combination of end-bearing and friction. These three types of support are described below.

Friction Piles

Friction piles are usually displacement type piles such as timber, concrete, or cast-in-place concrete utilizing steel shells, which obtain most or all of their load-carrying capacity through friction resulting from perimeter contact with the soil. The ultimate capacity of this type of pile is difficult to predict, and usually conservative design will limit the pile loads to a rather low range, say 25 to 35 tons. Higher loads on friction piles are generally permitted only when load tests are made

to at least twice the design load without failure. Steel H-piles are sometimes used as friction piles, particularly when the soil logs indicate the presence of rocks and boulders, or when considerable resistance build-up is anticipated such as in medium to heavy plastic soils.

End-Bearing Piles

End-bearing piles are those for which the tip of the pile is driven into rock, or a short distance into hardpan or dense gravel adequate to carry the design load without reliance on friction. Almost any type of pile can be used as an end bearing pile, but because of their high load-carrying capacity and their capability of penetrating relatively dense soils, steel H-piles are usually selected. When it is known that the tip of the pile will bear on rock, the AASHTO specifications currently permit loading steel H-piles to 4083 kg pcm^2, which means that a 12BP53 pile which has a cross section area of 100.52 cm^2 can be loaded to about 70 tons under the stated condition. In order to justify loads of this magnitude in dense material other than rock, load tests of not less than twice the design load are generally required. Also, for the latter condition, it is important that soils information is available for some distance below the pile tip elevation to assure a supporting layer of adequate depth. Cast-in-place concrete piles are also used as end-bearing piles when the soils information indicates that they can be driven to the required tip elevation, or when they are desired for the sake of appearance as in a pile bent.

Combination Friction and End-Bearing

Friction-end-bearing piles are those which derive their load-carrying capacity by a combination of friction and end-bearing, each of which has been previously defined. This would imply load-carrying capacities in the intermediate range, somewhere between a strictly friction pile and a strictly end-bearing pile. Justification for high loads on this type

of pile may require pile load tests. Cast-in-place concrete piles, utilizing steel shells, are probably best suited for this type of foundation design, although either timber or steel H-piles may also be used.

Types of Pile

Four of the principal types of pile are described below.

Timber Piles

Timber piles are displacement piles and generally obtain most if not all of their load carrying capacity through friction.

Untreated Timber Foundation Piles are timber piles which do not require a preservative treatment because they will be totally and permanently below the water level, precluding alternate wetting and drying. Other considerations in specifying the use of untreated timber would be that the water be free of acid or alkaline wastes and from harmful marine life.

Treated Timber Piles are by far the most commonly used timber piles for structures. When treated properly, they have excellent resistance against rot, acids and alkaline wastes, marine life, bacteria, and alternate wetting and drying. Because of their resistance to attack from the above named sources, treated timber piles can be used above or below water and under most types of adverse conditions.

Steel H-Piles

Steel H-piles are rolled sections which are made up in a variety of sizes and from various grades of steel. Currently specifications require A. S. T. M. A-36 steel, and the sizes commonly used are 10BP42 and 12BP53 (10 indicates 10 inches in cross section dimensions, BP indicates bearing pile, 42 indicates a weight of 42 pounds per foot, for the

10BP42 section). Steel H-piles, because of their comparatively small area in cross secton, displace a minimum volume of soil and therefore can be driven through fairly dense material, even into soft rock, making them a popular choice when these conditions are anticipated. They have great strength and toughness and can be driven to depths exceeding 60 meters by splicing additional sections onto those already driven.

Cast-In-Place Concrete Piles

Cast-in-place piles of the type currently being specified for structures require that steel shells be driven to required penetration and bearing, and the shells then filled with concrete. The thickness of the shell must not be less than the minimum specified, and must also be sufficient to withstand the required driving. Most contracts now permit the Contractor an option of using either tapered or cylindrical shells, with certain specific requirements regarding yield strength, wall thickness, diameter, and capability to withstand driving to substantial refusal.

Cast-in-place concrete piles of uniform cylindrical section will cause more displacement than will timber piles or tapered cast-in-place piles. However, since the driving shoe is slightly larger in diameter than the pile shell, and since the pile shell is of constant diameter and with a relatively smooth outer surface, friction does not build up as readily along its surface as in the case of tapered piles. Because of the generally larger diameter at the tip, however, cylindrical piles are likely to develop greater end-bearing capacity when dense soils are encountered.

Precast Concrete Piles

Precast concrete piles may cause problems because of their weight and because of the difficulty encountered when splicing becomes necessary on the job. Except for their driving weight, their performance can be compared with the cast-in-place concrete piles. Greater care must be exercised during driving to keep the pile and the pile hammer in proper

alignment, so that the hammer blows will be delivered squarely. Hammer blows delivered to the top of a concrete pile slightly out of alignment with the hammer are likely to cause damage by shattering the concrete on the side receiving the impact.

Test Piles

Test piles are used for determining the length of the remaining piles for a structure, or portion of a structure. Information gained during driving test piles should be compared with the soundings and borings on the Survey Sheet of the Plans as a guide for determining remaining pile lengths.

Penetration

Penetration usually is considered to be the length of pile below cutoff elevation; that is, the total length of a pile which will remain in the structure. The term "penetration" is also used in connection with "penetration per blow", which is generally determined by taking an average of several blows of the pile driving hammer, or by counting the blows per linear unit, which is used in the formula for determining the bearing capacity.

Jetting

Jetting is a means of obtaining pile penetration through elimination or reduction of resistance at the pile tip by use of water, air, or a combination of these two media, delivered by pressure through hoses and pipes. The soil is eroded below the tip of the pile, often permitting penetration merely by the dead weight of the pile and the hammer. It is particularly effective when displacement type piles are to be driven through dense fine sand to desired penetration in firm soils below, but should not be used in embankments or other areas where it would tend to destroy densities which have been purposely built into the soils. Also, unless good judgment is exercised, jetting could destroy the bearing value of piles already driven, especially when piles are closely spaced or when they tend to drift away from their prescribed course.

Water jetting has been useful as an aid to driving displacement types of piles in sand formation in streams, where water is readily available and pile penetration is equally as important as bearing capacity.

Preboring

Preboring, as the word implies, is merely boring holes through or into soils which are so compact as to cause damage to or create undesirable friction on the piles. It is perhaps the most expedient and popular method of obtaining pile penetration of displacement piles through or into high density embankments, or through crusty upper stratum that must be penetrated because of weak underlying soils. Preboring is generally accomplished by the use of a power auger of a diameter larger than the maximum diameter of the piles to be driven, mounted on the crane used for the pile driving or on separate equipment.

Pile Driving Equipment

Pile Hammers

There are five basic types of pile hammers:

Drop Hammer. This is the original pile driving hammer. It consists of a steel ram, forged to a shape that will permit it to be confined within a set of leads, and to be raised to desired height and dropped on the top of the pile. This type hammer is now rarely used because of its slow operation and because the velocity at impact often results in pile breakage before the required penetration and bearing have been attained. Greater efficiency and less damage will result from the use of a 2,268 kg ram with a two meter drop than from a 1,134 kg ram with a three meter drop. It is generally necessary to provide a steel pile cap to fit over the top of the pile, with a shock block on the top of the cap to absorb part of the impact.

Single-Acting Power-Driven Hammers. Hammers of this type are basically drop hammers except that the ram (striking part) is encased in a steel framework and is raised by steam or compressed air delivered through hoses. The frequency of the blows is considerably higher than with a drop hammer, the ram weight is usually greater, and the height of drop is considerably less. The increased frequency of the delivery cycle permits less time for the soils to settle back around the pile between blows, thereby further increasing the efficiency.

A typical hammer of this type utilizes a 2,200 kg ram with a one meter drop, delivering approximately 60 blows per minute. A hammer of this size will serve very adequately for most pile driving and has the added advantage, from an inspection standpoint, of providing for a positive check of the energy delivered by the hammer. To determine the actual energy output, in kilogrammeters, merely multiply the weight of the ram times the height of the drop.

Double-Acting Power-Driven Hammers. The ram is raised by steam or compressed air, as it is in the case of single-acting hammers. In addition, however, the same source of power is utilized for imparting a force on the downstroke, thus accelerating the speed of the ram and creating the same effect as would be obtained by a considerably longer stroke of a single-acting hammer where no force other than gravity is available for the downstroke.

Some double-acting hammers utilize a relatively light ram, operating at comparatively high frequencies, to develop energy blows comparable to those developed by considerably heavier, slower-acting hammers. The advantage of higher frequencies is that less time is permitted for re-settling of the soils against the pile between blows, thus increasing driving efficiency and decreasing

driving time. The disadvantage is that under some conditions considerable damage may be evidenced at the top of the pile, caused by high impact velocities. Therefore, the Inspector should be particularly alert when a high velocity hammer is being used, since energy dissipated in destruction of a pile head is lost insofar as usefulness to the driving is concerned. Only that energy which reaches the tip of the pile, or at the very least the center of resistance, is effective in producing additional penetration.

The energy delivered by double-acting hammers is generally related to frequency (strokes per unit of time), and is usually obtained by referring to tables furnished by the manufacturer. When the table shows only one energy rating for a particular hammer model, this is usually the maximum energy attainable and probably never would be attained in actual practice. Therefore it is customary to provide for a 25% reduction in computed bearings when no other means of energy determination are afforded.

Diesel Power-Driven Hammers. Diesel hammers consist of a steel jacket containing a cylinder (which acts as a ram) and an anvil. The cylinder is raised initially by an outside power source (crane) and dropped as a drop hammer. As the cylinder drops, it actuates a fuel pump which injects fuel into the chamber or the anvil cup, depending upon the make of the hammer. The heat of compression, or atomization by impact, ignites the fuel, expands the gases, and forces the cylinder upward.

The energy delivered by diesel powered hammers is perhaps more variable and more dependent upon the resistance offered by the soils than is the case for other hammer types. Sudden energy surges develop whenever areas of high resistance to driving are encountered, whereas areas of low resistance may cause malfunction by insuffiient internal pressure to set off an explosion.

There are other variations in the operation of the diesel hammers which affect their performance, but which are considered to be beyond the scope of the general informational coverage of this manual. Pile hammer manufacturers usually provide brochures on their equipment upon request. Such information should be available at the District and Headquarters.

Vibratory and Sonic Power-Driven Hammers. These are the most recent developments in pile driving hammers. They are comparatively heavy, requiring handling equipment of greater capacity than required for conventional pile hammers.

The vibratory hammer, as the term implies, vibrates the pile at frequencies and amplitudes which tend to break the bond between the pile surfaces and the adjacent soils, thus delivering more of the developed energy to the tip of the pile. The sonic hammer operates at higher frequencies than does the vibratory hammer, usually between 80 and 150 cycles per second, and is tuned to the natural resonant frequency of the pile. At this frequency, the pile changes minutely in dimension and length with each cycle, thus alternately enlarging the cavity and then elongating the pile.

Pile Hammer Leads

Pile hammer leads serve to contain the pile hammer, and to direct its alignment so that the force of the blows delivered by the ram will be axially with the pile. They also provide a means for bracing long, slender piles until they have been driven to sufficient penetration to develop their own support. It is, therefore, essential that leads be well constructed; and that they provide for free movement of the hammer, but not to the extent that they permit noticeable changes in hammer and pile alignment.

For drop hammers, it is especially important that the leads be straight and true, and that freedom of fall is afforded, since any bends or other restrictions to free fall would tend to reduce the acceleration of the hammer and consequently the energy delivered. Timber leads should be steel shod, and drop hammer leads should be greased so as to reduce friction.

Accessories

Bases, anvil blocks, driving caps, adapters and shock blocks are some of the accessories required, depending upon the type, make and model of hammer and upon the type and size of the piles being driven. The best assurance that the proper types and combinations are being used is to follow the recommendations of the pile hammer manufacturer, as given in their brochures or catalogs.

Basically, the need for these items is to protect the pile and the hammer against destructive impact, and to keep the pile head properly positioned within the leads. Shock blocks are required particularly when driving precast concrete piles, since the impact would otherwise shatter the comparatively brittle concrete. Also, the proper arrangement and combination of these accessories will tend to distribute the impact more uniformly over the top surface of the pile, thus protecting it against eccentric blows which might otherwise cause failure of the butt of the pile before required penetration and bearing is obtained. Excessive thickness of shock block material, particularly softwood or spongy material will reduce the energy delivered to the top of the pile and should be avoided.

Power Sources

Except for self-contained power source hammers, such as diesels, vibratory, and sonic hammers, an outside power source is required for power-driven hammers. In the beginning, steam boilers were used

exclusively for developing power; currently however, boilers have been almost entirely replaced by air compressors.

Regardless of the source, adequate power must be supplied if the hammer is to function properly. When an adequate power source is not supplied, continuous driving will deplete the supply to the extent that malfunction will generally result. This usually means that the hammer will operate at something less than specified stroke, or frequency, or that it will cease operating entirely until sufficient power build-up has been attained.

Inspection

Pile driving inspection is a very important function and is deserving of undivided attention. Some agencies recommend that a trained Soils Engineer be present to approve each pile installation and to revise procedures as varying soils conditions are encountered. The Inspector should have a fair knowledge of soil types and characteristics, so as to be able to relate the soils information shown on the survey sheet to the pile driving operations and difficulties.

The need for the Inspector to be present at all times when piles are being driven is particularly true when driving timber piles, because breakage below the ground surface may occur at any time and may be detected only by an alert Inspector. This is also true when piles are driven through or into hard strata, such as rock or hardpan, since the tips may be damaged by over driving or carelessness unless great care is taken.

CONCRETE DESIGN

A major responsibility of the Engineer and Inspector during bridge construction is to ensure that quality concrete is provided in accordance with specifications. Three important elements of concrete design are discussed in this section.

- Aggregate blending
- Stockpiling aggregates
- Consistency of concrete mixes

Aggregate Blending

The specifications for coarse aggregate for concrete usually are expressed in permissable ranges of percentages of various size stone. These specifications may vary for concrete to be used for different purposes -- deck, piers, foundations, etc. And seldom is one stockpile source suitable for all purposes.

For this reason, coarse aggregate for concrete usually is supplied in two or three sizes and stockpiled for different uses. Often, it is necessary to design a blend of aggregate from two different stockpiles in order to conform with specifications.

Two methods are shown below for designing a blend of coarse aggregate from two sources. In both examples, the objective and basic data are the same.

Objective: To design a blend of aggregates which will satisfy the requirements for AASHTO Coarse Aggregate #467.

Sieve Size		% Passing
Inches	Millimeters	
1-1/2	38.10	95 - 100
3/4	19.10	35 - 70
3/8	9.52	10 - 30
No. 4	4.76	0 - 5

Available: Two stockpiles of coarse aggregate, one of larger stone and one of smaller stone, each with the following characteristics.

Larger Stone			Smaller Stone		
Sieve Size		% Passing	Sieve Size		% Passing
Inches	Millimeters		Inches	Millimeters	
1-1/2	38.10	95	1-1/2	38.10	100
3/4	19.05	30	3/4	19.05	80
3/8	9.52	5	3/8	9.52	40
No. 4	4.76	0	No. 4	4.76	10

Coarse Aggregate Blending Chart

A typical coarse aggregate blending chart is shown on the following page. The problem above can be solved using the chart and the procedures described below.

1. Plot the values for "percentage passing" of the larger stone on the left ordinate (shown as ⊙).
2. Plot the values for "percentage passing" of the smaller stone on the right ordinate (shown as △).
3. Draw a light line between the left and right ordinates connecting the plotted points for each sieve size.
4. The shaded bars to the right of the chart show the acceptable gradation limits of the desired blend. Draw dashed, horizontal lines from the upper and lower limits of each bar segment to an intersection with the line representing the same sieve size. Mark this intersection with a small "x."
5. Connect the "x" points on the left of the chart -- these represent the lower limits of "percent passing." Connect the "x" points on the right of the chart -- these represent the upper limits of "percent passing." Use dotted lines as shown in the example.
6. Any vertical line that does not intersect a dotted line will provide an acceptable blend of the two stones. It is evident that we cannot use less than 15% nor more than 52% of the smaller stone.

COARSE AGGRECATE BLENDING CHART

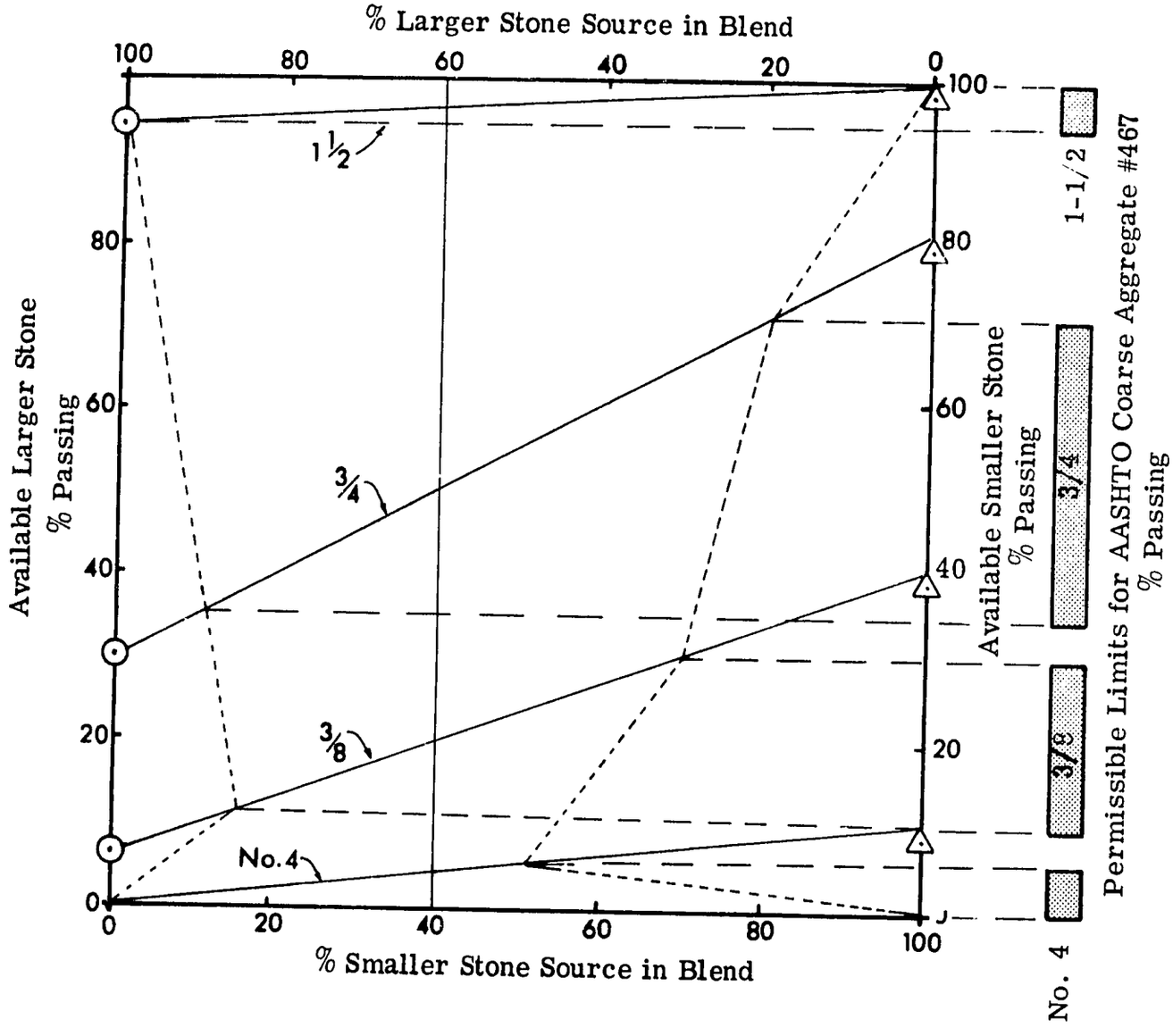

7. A blend of 60% larger stone and 40% smaller stone might be selected. This is represented by the vertical line connecting 60% on the top and 40% on the bottom of the chart. The intersection of this line with each sieve size line shows the expected gradation if this blend is used.

Sieve Size		Blend of 60% Larger Stone	Required for
Inches	Millimeters	and 40% Smaller Stone	AASHTO #467
1-1/2	38.10	97	95 - 100
3/4	19.05	50	35 - 70
3/8	9.52	19	10 - 30
No. 4	4.76	4	0 - 5

This blend is acceptable. If a vertical line cannot be drawn without intercepting either the left or right areas of the chart, the two stones cannot be blended to meet the required gradation.

Fineness Modulus Method of Blending

The fineness modulus of an aggregate is determined by adding the accumulated percentages by weight retained on the following sieves with square openings -- 3-in. (76.2 mm); 1-1/2 in. (38.1 mm); 3/4 in. (19.5 mm); 3/8 in. (9.52 mm); No. 4 (4.76 mm); No. 8 (2.38 mm); No. 16 (1.19 mm); No. 30 (0.59 mm); No. 50 (0.297 mm); No. 100 (0.149 mm) -- and dividing the sum by 100.

The concept of this method of blending is that the most dense combination of the two stone sources will be given by the following computations.

The percent of the smaller aggregate to be blended with the larger aggregate will equal:

$$\frac{\text{FM of Larger Agg. - Mean FM of Requirements}}{\text{FM of Larger Agg. - FM Smaller Agg.}} \times 100$$

The following example shows computations to design the blend, using the same basic data presented for the chart solution.

1. Determine fineness modulus (FM) of larger stone.

Sieve Size		% Passing	Accum. % Retained
Inches	Millimeters		
1-1/2	38.10	95	5
3/4	19.05	30	70
3/8	9.52	5	95
No. 4	4.76	0	100
No. 8 - No. 100 (5)	2.39 - 0.149	0	500
			770

$$FM = \frac{770}{100} = 7.70$$

2. Determine FM of smaller stone:

Sieve Size		% Passing	Accum. % Retained
Inches	Millimeters		
1-1/2	38.10	100	0
3/4	19.05	80	20
3/8	9.52	40	60
No. 4	4.76	10	90
No. 8 - No. 100 (5)	2.39 - 0.149	0	500
			670

$$FM = \frac{670}{100} = 6.70$$

3. Determine mean FM of specification:

Sieve Size		Specification	Average	Accum. % Retained
Inches	Millimeters			
1-1/2	38.10	95 - 100	97.5	2.5
3/4	19.05	35 - 70	52.5	47.5
3/8	9.52	10 - 30	20.0	80.0
No. 4	4.76	0 - 5	2.5	97.5
No. 8 - No. 100 (5)	2.39 - 0.149	0	0	500.0
				727.5

$$FM = \frac{727.5}{100} = 7.27$$

4. Using Formula:

$$\% \text{ Smaller Stone} = \frac{7.70 - 7.27}{7.70 - 6.70} \times 100 = \frac{0.43}{1.00} \times 100 = 43\%$$

Stockpiling Aggregates

Stockpiling of aggregate usually will be required by the Contractor during some phase of the construction. The method of stockpiling can affect the acceptability of the aggregate.

Incorrect methods will generally result in the segregation of the aggregate. Aggregate that at one time met specified gradation, but was later stockpiled incorrectly may not be acceptable without a great deal of re-mixing effort on the part of the Contractor. This work can be costly and time consuming.

The General Specifications do not tell the Contractor exactly how aggregates must be stockpiled, but only relate in general terms that segregation and contamination must not occur.

The Engineer must be observant of all stockpiling operations and note any practice, other than a correct one, which might result in unsatisfactory aggregate. The Engineer should advise the Contractor of any operation, that in his opinion, might result in unsatisfactory segregation.

The following sheets illustrate correct and incorrect methods of stockpiling and filling of storage bins.

Consistency of Concrete Mixes

A small amount of additional water added at the wet end of the scale will have a greater effect on the consistency than will the same amount of water at the dry end of the scale.

Example: 6.5% additional water is required to change the slump from 3 cm to 5 cm whereas only 2% additional water will produce a change from 13 cm to 15 cm.

STOCKPILING METHODS

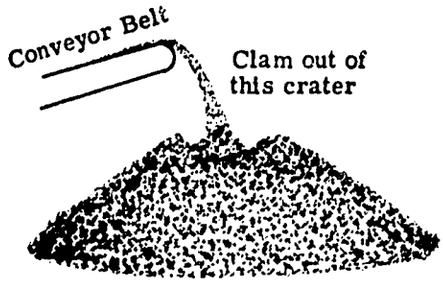

Correct

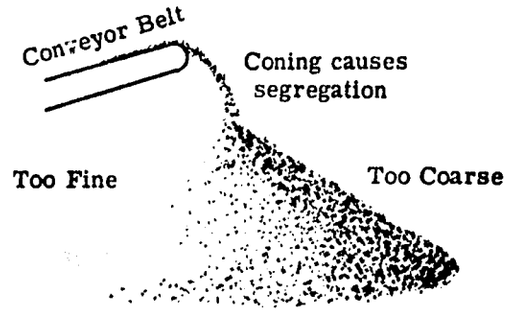

Incorrect

Each bucket load is <u>placed</u> in stockpile, not broadcast.

Terraced sides prevent segregation.

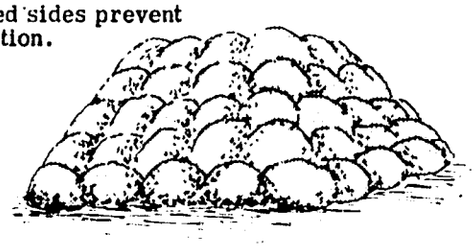

Correct

Broadcasting

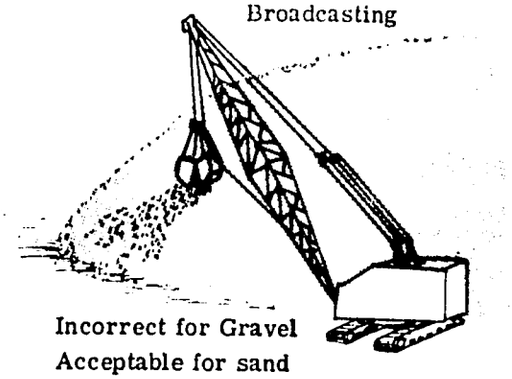

Incorrect for Gravel
Acceptable for sand

Bulldozing Stockpiles

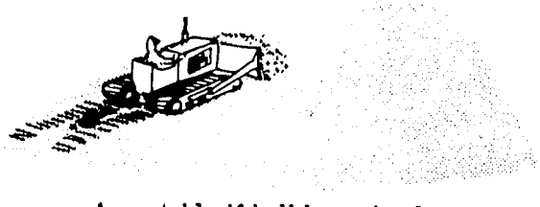

Acceptable if bulldozer is clean.
For all aggregates, slopes not flatter than 3:1

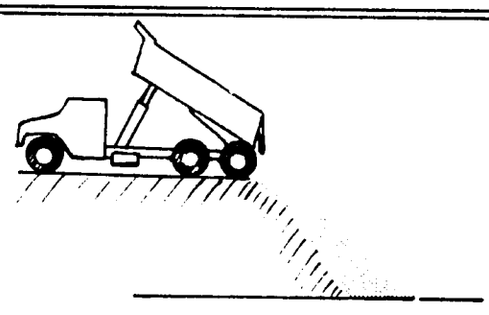

Acceptable for sand.
Acceptable for coarse aggregate only when sizes are within 5/8" of each other such as 1-3/8" to 3/4" or 3/4" to #4.

Piles are tight together

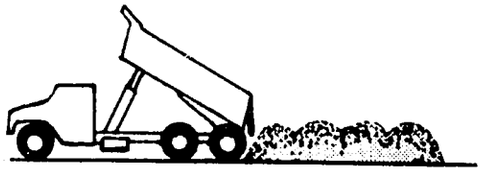

Correct

Small individual piles are difficult to load without segregation.

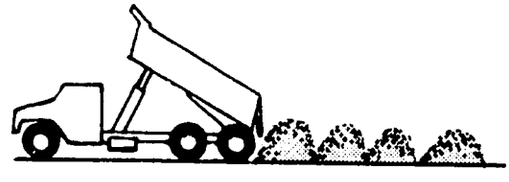

Incorrect

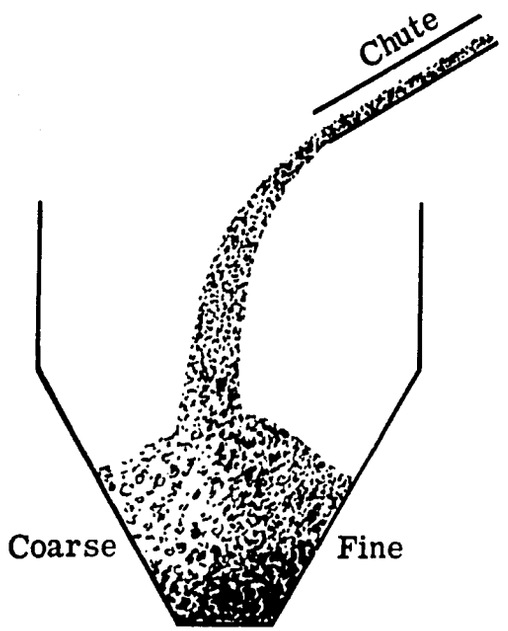

Incorrect

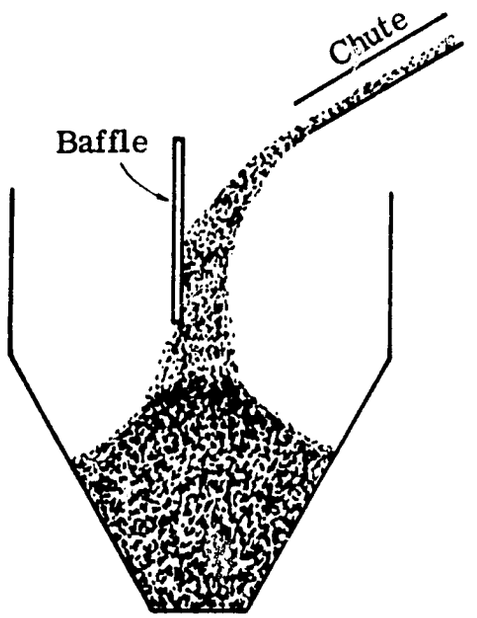

Correct

The approximate changes in water content, in percent, required for various changes in slump are shown in the following tabulation.

To illustrate the use of the table below, assume that a given mix will produce a 5 cm slump. If a 10 cm slump is desired with this same mix, the water content must be increased 7.9%. In another illustration, the water content must be decreased 10.3% to reduce the slump from 13 cm to 5 cm.

PERCENT CHANGE IN WATER CONTENT

From a Slump of:	To a Slump of:					
	3 cm	5 cm	8 cm	10 cm	13 cm	15 cm
3 cm	0.0%	+6.5%	+11.2%	+14.9%	+17.5%	+19.9%
5 cm	-6.5%	0.0%	+4.5%	+7.9%	+10.3%	+12.6%
8 cm	-11.3%	-4.5%	0.0%	+3.2%	+5.6%	+ 7.7%
10 cm	-14.9%	-7.9%	-3.2%	0.0%	+2.3%	+4.4%
13 cm	-17.5%	-10.3%	-5.6%	-2.3%	0.0%	+2.0%
15 cm	-19.9%	-12.6%	-7.7%	-4.4%	-2.0%	0.0%

CHAPTER V

RECORDS AND REPORTS

The purpose of this Chapter is to describe the reporting system used to document work performed on construction projects and to provide specific information to assist inspection personnel in completing necessary reports and maintaining required records.

Responsibilities

The Resident Engineer is responsible for the proper on-site fulfillment of the construction contract, however it is virtually impossible for him to perform all associated duties on the project without assistance from supporting personnel in the inspection and documentation of the work. The reporting system provides communication between inspection personnel, the Officeman, the Resident Engineer and Headquarters.

Inspection reports are the source documents for daily, weekly and monthly reports as well as other necessary records required on all construction projects. It is extremely important that inspection personnel fulfill their responsibility relative to inspection reports since they initiate the reporting system. When inspection reports are inaccurate or incomplete, the entire reporting system becomes ineffective. Complete and comprehensive records are necessary to document actual work performed on the project. They are also needed when preparing as-built plans or to support the Resident Engineer's position in the event that misunderstandings or claims develop on the project.

The Officeman is charged with the responsibility of overseeing the status of reports and records for the Resident Engineer and to keep him informed on pertinent aspects concerning the reporting system.

Although this chapter does not cover all conditions, it contains information on the principal items of work applicable to most construction projects currently in use. The contents should provide project personnel with sufficient information and guidance in the preparation of reports and records for any item of construction.

TYPES OF REPORTS

Daily Reporting

Inspection report forms, intended primarily as source documents for contract item work, will also be used to document other matters that constitute vital information necessary to complete a comprehensive daily summation of all project activities. These items should include, but not be limited to:

1. Unusual problems encountered, and their solutions.

2. Changes, extra work, and time extensions and their justifications.

3. Results of review of materials test reports.

4. Unsatisfactory or questionable materials, workmanship, or conditions encountered and corrective action taken.

5. Any situation that indicates noncompliance with plans, specifications, contract provisions, or prescribed policies and procedures.

6. Any controversial matter.

7. Weather conditions.

8. Orders given the Contractor.

9. Important discussions with the Contractor or his representative.

10. Official visitors and inspections.

11. Work or materials rejected and reasons.

12. Time of shutting down or resuming of work and explanations.

13. Account of time spent by Contractor's men or equipment on disputable items of work.

14. Length and cause of delays.

15. Arrival and departure of major equipment.

16. Record of telegrams and telephone calls.

17. Unusual conditions, if any, such as high water, bridge failures, slides, etc.

18. Progress of staking and surveys made.

Photographs provide an important source of daily documentation. The Resident Engineer should take photographs of the work as it progresses and at final completion. There should be photographs taken of the site before it is disturbed by construction operations. Photographs should also be taken of: complex, unusual and difficult types of construction; equipment; conditions from which controversy might be expected to develop; experimental features; and other items of special interest. Prints should be labeled, including the date of exposure of the film and the name of the person taking the photo, as well as the name of the person or firm developing the film.

These reports and documents will remain on the Project site until the Project has been completed. Upon completion of the Project, these documents will become a part of the permanent file of the Project at the Highway Department Central Headquarters.

Bi-Weekly Reporting

A summation of the daily reports will be compiled and reported on a Bi-weekly Construction Report. This report should give the overall progress of the work and other important information such as those listed in the Daily Reporting Section above.

The original of these reports will be forwarded to the Central offices of the Highway Department with copies to the District Office. One copy will remain on the jobsite in the project files.

Non-recurring Reporting

This type of reporting will include such work as pile driving, progress estimates, earthwork computation, etc.

These reports will be completed as the need for them arises in the course of the work. Copies of the original will be forwarded to the District and Central Offices.

REPORT PROCESSING

The following flow diagram indicates the routing of reports, vouchers, and other documents that originate at the project level. It also shows the routing of the progress and control tests that are tested in the field or sampled in the field and sent to either the District or Central Laboratories for testing.

The progress tests are those that are used for project control and are used on a day-to-day basis to maintain quality control and are taken at the Project Engineer's request. The results, if determined in the field, are given directly to the Project Engineer. If the testing requires the facilities of either the District or Central Laboratory, the results are forwarded as shown on the chart.

REPORT PROCESSING DIAGRAM

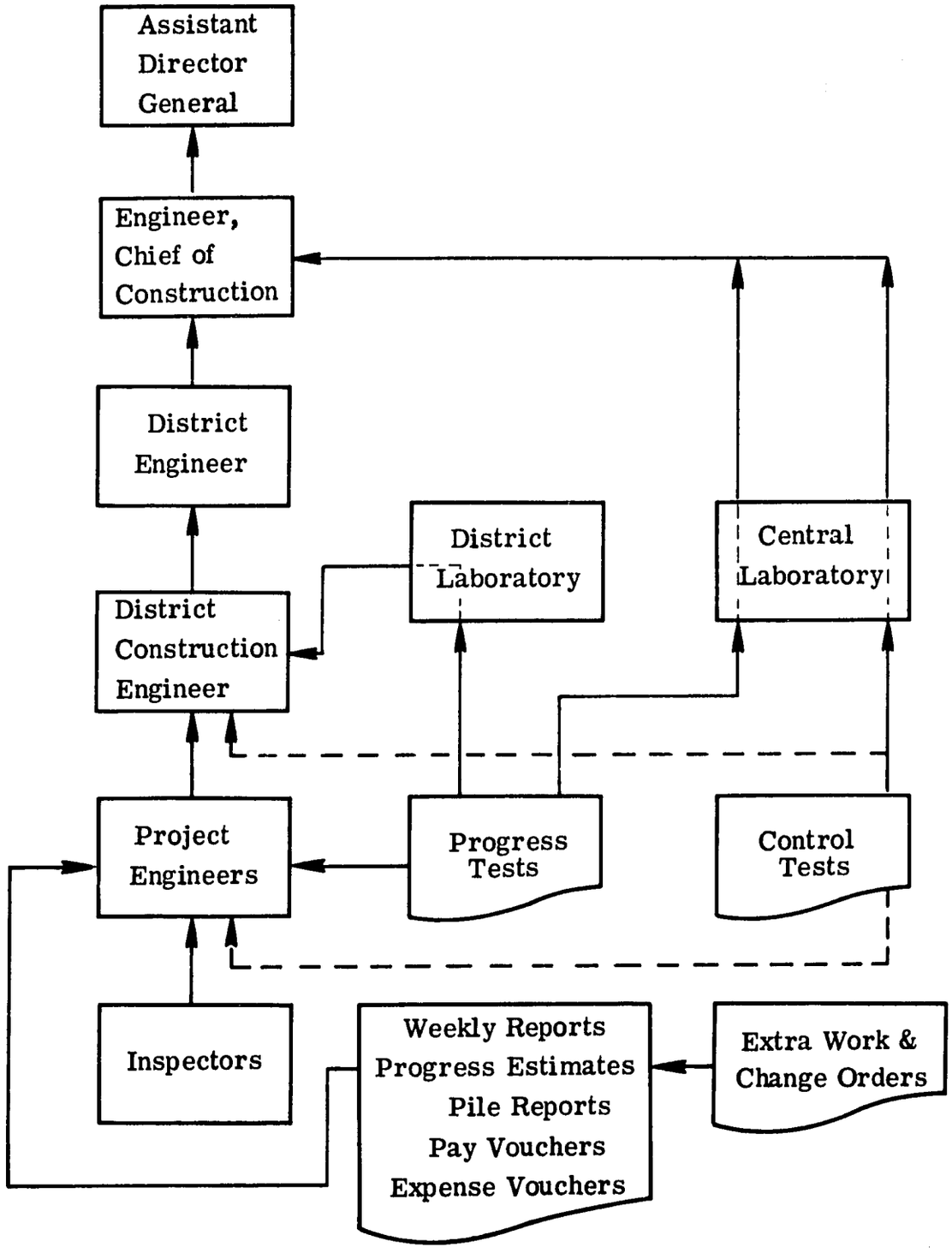

The control tests are those taken at the request of someone other than those in direct control of the project. These are taken at random and are used to verify the job progress tests and also to standardize the testing procedures of the Highway Department testing personnel throughout the country.

All results are forwarded as shown on the chart.

FIELD BOOKS

This section will detail an acceptable method of recording field notes. These books will become the permanent on-the-job record of computed quantities, important events, official visits to the project by Highway Department personnel and other personnel connected with the project, and other pertinent information. General criteria for Field Books are listed below.

1. Field Book covers should be marked with a black marking pen and should include the following:

   a. Project Name
   b. Project Number
   c. Book Number

2. All entries should be made with a pencil except for the Diary, which must be kept in ink.

3. All item documentation should show locations, elevations, sketches and dimensions where applicable.

4. Sources of materials should be entered and suppliers and brand names given.

5. All quantities, measurements and changes made in the Field Book should be dated and signed.

6. All books should be completely indexed and Book No. 1 will contain an index of the project books as well as an index of the material to be found in Book No. 1. Book No. 1 will be the Project Diary.

7. The number of books will vary with the size and complexity of the project. All projects will have a minimum of two books, the Job Diary and one other for the summation of quantities, computations and all other information that will be discussed in the following pages.

8. Lengthy and detailed computations may be done on computation size paper or cross-section paper but the results must be entered in the proper field book and appropriate cross-references made to the computation sheets or cross-section roll.

9. No erasures in any book or computation sheet will be permitted. If an error is made, simply draw a line through it and enter the corrected figure or word.

The various types of Field Books are described below. Examples of typical entries are shown at the end of this section.

Job Diary - Book No. 1

This is one of the most important books on the project. Entries should be made daily and in many instances, almost hourly, in order that no item be left out and exact details recorded.

The book should be labled Book No. 1, with the project number on the face of it. It is the only Field Book that must be in a bound form. Other books may be in loose-leaf form. All entries should be in ink. Ball point pen is acceptable. Show the following information each day, and such other information as is necessary.

1. Date

2. Weather

3. Names of project staff at least once a week, then the rest of the week, any additions, deletions or absentees.

4. Description of the work done by the Contractor.

5. Any discussions with the Contractor or his representative and decisions reached.

6. Names of any officials visiting the project.

7. Any other information, particularly anything controversial that relates to the project, such as conversations with adjacent land owners.

8. Signature of person making the entry.

Transit Notes - Book No. 2

In this book, all horizontal control data will be kept. This will include the following:

1. Curve data

2. All information relative to reference points.

3. Tangent data.

4. Names of crew, and weather conditions.

Level Book - Book No. 3

This book should contain all vertical control data, not just the benchmarks location and elevation, but the actual level notes establishing the control points. Also:

1. Date.

2. Names of all persons on level party.

3. Weather conditions.

4. Description and location of all benchmarks.

Cross Sections - Book No. 4

These books will show the actual construction staking with cut and fill slope stakes, original ground profile, grades, names and dates of all survey crew members, and weather. This book must be very accurate as all earthwork computations are made from it.

Culvert Notes - Book No. 5

This book will show the station, size and angle of each culvert installed; also the cross section of original ground, location of any cut or fill stakes establishing the flow line of drainage structure. Show sketch.

1. Date staked.

2. Weather.

3. Crew.

4. Date installed

5. Date shown on estimate

6. Number of cubic yards culvert excavation.

Surfacing Notes - Book No. 6

These books will show location and date all surfacing material placed on roadway.

1. Date

2. Weather

3. Names of crew members

Miscellaneous Excavation - Book No. 7

This book will show all outlet and inlet ditch excavations, channel excavations, contour ditches to control erosion, and any other miscellaneous excavation quantities.

Summary Book - Book No. 8

This book will contain all the final pay quantities of every item on the contract, including extra work items. At least one page should be devoted to each item. Each item should also have a cross-reference to the book, cross section roll, or computation sheets where the final pay quantity was computed. Items should be listed in numerical order for easy reference.

Computation Sheets

Examples of two commonly used computation sheets are shown at the end of this section. One is used by field crews for traverse computations -- the other for computing bearings from solar observations.

DIARY

Date: 1 Jan. 1975

Weather: Hot - Humid

Contractor worked 8 hrs. and had 20 men on project.

Crew worked on installing culverts all day. Pipes were installed at Sta. 113 + 113, 114 + 141 and 115+ 200. Work was satisfactory at each installation.

One man was injured while lifting pipe - was taken to hospital.

Two men from Central Headquarters drove over the project today.

Water rise at bridge site peaked out at 0900 at 0.5 above normal. High water due to heavy rains to west late Dec. 31.

(signature)

TRANSIT NOTES

Sta.			
21+00	P.O.T.		
+80.7	P.T.	5°42½'	
+50		5°24'	
12+00		4°54'	
+50		4°24	Δ 11°25'
11+00		3°54'	D 2°
+50		3°24'	T=286.4
10+00		2°54'	L=570.8
+96.3	P.I.		R=2865.0
+50		2°24'	
9+00		1°54'	
+50		1°24'	
8+00		0°54'	
+50		0°24'	
7+09.9	P.C.	0°00'	
0+00			

Cold - Rain 9/10/72

John - K
Bill - head chain
Mike - Rear Chain
Henry - Stake

3/4" Iron Pin			3/4" Iron Pin
0	108	90°	110 0
3/4" Iron Pin			3/4" Iron Pin
0		90°	0

Begin Project I 90-7 (5) unit 1

Levels and Benchmarks

Clear, Warm, Windy 10-14-72 John T Bill Rod

STA	BS	HI	FS	ELEV.	
0+00	7.15	1823.87		1816.72	Level datum secured G.S.B.M. No 902 located 10 meters East of bridge No 82 over Dark Horse River and on the South Side of River by Large boulder
2+00			12.15	1811.72	Top ¢ stake Sta. 2+00
	2.11	1813.83			
6+00	BM.		12.75	1801.08	Nail driven 15 cm above ground in 30 cm Pine tree 85 meter Right Sta. 6+12.
	1.08	1802.16			
10+00	T.P.		11.16	1791.00	Top of Large boulder 2m rt. Sta. 9+95
	0.78	1791.78			
16+00	B.M.		7.89	1784.89	Iron Pin 7.5m Lt. of Sta. 16+10 To be used for Control on bridge 81

TYPICAL CROSS SECTION NOTES

Sta.	Grade	BS	Hi	FS	Eley.
		7.35	1824.07		1816.72
0+00					
1+00					
+25					
+75					
2+15					
2+60					
3+00					
	TP			7.28	1816.79

Warm Windy 11/30/72

Bill π Notes
Fred
Henry
George

G.S. B.M. #902

8.1	8.8	7.1	2.1	1.0	6.0	7.0	7.3	8.0	9.0	10.0	11.1	12.4
60	52	48	26	15	5		10	15	21	38	44	60
9.7	8.1	7.9	5.7	3.0	4.0	5.0	7.0	7.3	9.6	10.1	11.8	12.8
60	56	47	25	14	12		8	14	20	40	46	60
9.2	8.0	5.0	3.0	2.0	3.0		5.9	7.1	9.6	10.3	12.2	
60	50	30	26	25			9	18	31	45		60
10.1	9.7	7.0	3.0	2.8	2.0		3.8	5.0	7.0	9.6	10.3	
60	50	36	23	17			8	21	28	45		60
9.7	6.0	4.9	3.6	4.0			4.6	7.0	8.6	10.3		
60	47	11	15				15	28	40	60		
6.8	6.5	7.6	8.0	8.0			8.1	7.0	5.0	9.5		
60	43	25	17				18	37	47	60		
4.5	4.8	5.4	7.0	7.6			8.0	7.6	5.6	8.0	9.0	
60	45	32	20				15	30	44	55	60	

To A & Stake Sta. 3+25

Typical Culvert Notes

Sta	Grade	B.S.	H.I.	F.S.	Elev.
		5.76	1796.76		1791.00
12+15					

Pipe removed from sta. 3+89 good condition

Clear Warm 11/14/72 John R Notes Henry George

Top Large boulder 2m Rt Sta 9+95

C2.0												C3.1
8.1	7.4	8.7	2.1	7.1	6.8	7.1	7.8	6.1	7.0	8.0	8.5
42	40	36	19	15	10		18	21	31	36	38
TOP Hub											TOP Hub

Old 48" x 72' RCP

Installed 5/12/73

8 men 1- Front end Loader 1 backhoe

27.5 cubic meters Cul. Exc.

Shown on Estimate No. 2

ITEM BOOK

Item 504 - Concrete Masonry

Concrete Guard Post

Class A Concrete 3.96 M^3

Reinforcement Steel 453 Kg.
This quantity to be added to Item 505, page 60 of this book.

Concrete:

2.0

0.30 x 0.30

2.0 x 0.30 x 0.30 = 0.18 M^3 per post

0.18 x 22 post = 3.96 M^3

Reinforcement Steel:

Each Post 4 #6 bars x 1.93
6 #3 stirrup x 1.07

4 x 2.20 Kg. x 1.93 = 16.98
6 x 0.56 Kg. x 1.07 = 3.59
20.57 Kg. per post.

20.57 x 22 posts = 453 Kg.

Calculations:
1/15/75 John K.
By:

SUMMARY BOOK

Item 504 - Concrete Masonry

Final Pay Qunatities 873.2 M^3

See pages 20 thru 46 of Concrete Book for calculations.

Item 505 - Reinforcement

Final Pay Quantities 10,117 Kg.

See pages 47 thru 55 of Concrete Book for calculations.

Form No. _____

TRAVERSE COMPUTATIONS

Instrumentman _____ Project _____ Sheet No. _____
Computer _____ Location _____ Book No. _____
Field Date _____ Traverse _____ Pages _____
Date Computed _____ Zero of Coordinates _____ Datum _____

Station	Azimuth Bearing Dist.	Depart.	Log Sin / Log dist.	Log Cos / Log dist.	Lat.	Lat. Depart N S	Lat. Depart E W	Balanced Lat.	Balanced Dep.	Tot. Posi. Lat	Tot. Posi. Dep.	Ele.	Sta.

Error in Dep. _____ Closing Lin. Error _____ Ratio of Error _____
Error in Lat. _____ Length of Traverse _____ Closing Ang. Error _____

COMPUTER _____

DIRECT SOLAR OBSERVATION

Observation By _____ Date _____

Station _____ Project No. _____

Latitude _____ N _____ Longitude _____ W _____

Watch Reads _____ Time _____

Obsrg. Teles.	Prog. Sun	Watch Time	Vertical Angle	Horizontal Angle and Direct to Sun
1 Dir	+			
6 Rev	+			
2 Dir	+			
5 Rev	+			
3 Dir	+			
4 Rev	+			
Sum.				
Mean				

Refraction of Paral Lax = _____ Add _____

True Altitude (H) = _____ Log Sec _____

Latitude = _____ Log Sec _____

Sum (H & Lat) = _____

Nat Sine _____ Cos (90-Sum) _____

Nat Sine _____ Declination _____

Alg Sum _____

Log of Alg Sum = _____

Log Versine Az = _____

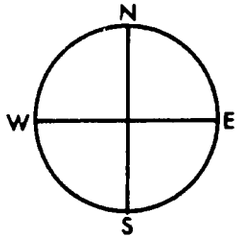

Az of Sun (from S) = _____

Hor. angle to Ref. Pt. = _____

Bearing of Line _____

NOTE: There are several ways to keep notes and make solar observations.

EXAMPLE REPORTS AND RECORDS

The following pages show examples of various forms and reports and describe their intended use. Included by general categories are:

Contract Administration

- Notice to Proceed
- Request for Approval of Subcontractor
- Contract Payment Voucher
- Order to Suspend Work
- Order to Resume Work

Contract Revisions

- Change Order
- Supplemental Agreement
- Extra Work Order

Construction Reports

- Daily Inspector's Report
- Bi-Weekly Progress Report
- Pile Driving Report
- Earthwork Computation Sheet
- Certificate of Compliance
- Certificate of Acceptance

NOTICE TO PROCEED

This form will be prepared by the District Engineer after the contract has been executed, and will serve as the official notice to the Contractor that he is authorized to commence work.

The form is largely self-explanatory. The date on which the proposal was accepted is the contract execution date. The highway project description is the same as is shown on the contract. Signed copies should be returned to the District Office which initiated the notice, and to the Highway Central Office.

Form No._____

MINISTRY OF PUBLIC WORKS
HIGHWAY ADMINISTRATION

NOTICE TO PROCEED

Date_____

TO: _____
_____
_____

Gentlemen:

In accordance with terms of the contract proposal submitted by you and accepted on_____, 19__ by the Highway Administration for Construction of Highway Project No._____ you are hereby authorized to proceed with work on this project, provided that the specified Performance Guaranty has been deposited with the Highway Administration.

In any case, assessment against the_____calendar days/months stipulated for completion of this project will be started on_____ unless an order to suspend work is issued prior to this date. Please sign the original and all copies in the space provided. Retain the original and return the copies to_____.

Respectfully,

Director General
Highway Administration

By_____
Title_____
Date_____

Receipt of this order is hereby acknowledged.
Date_____
Contractor_____
By_____
Title_____

Refer to Standard Specification Section 109.02

REQUEST FOR APPROVAL OF SUBCONTRACTOR

This form is to be prepared by the Contractor and approved by the Contractor's surety. All copies are to be returned to the Project Engineer for review and approval. The Project Engineer, if he approves the request, will then forward the request to the District Engineer for approval. The District Engineer will then forward the request to the Chief of Construction Division for further handling.

This form must be prepared for all Subcontractors. The request is not a part of the contract and does not relieve the prime Contractor of any obligation.

No Subcontractor shall be allowed to perform any work on the project until this request has been approved.

Approval of this request constitutes the written consent as stipulated in Section 109.01 of the Standard Specifications.

This form should be supplied to the Contractor upon his request, and his request for the approval of a Subcontractor should be accepted only on this form.

Form No._____

MINISTRY OF PUBLIC WORKS
HIGHWAY ADMINISTRATION

REQUEST FOR APPROVAL OF SUBCONTRACTOR

Project Number_____ Location_____
We hereby request approval for_____ Prequalification
Registry No._____whose address is_____
_____ as a Subcontractor on the above contract
which was entered into between the_____
and the Contractor on the _____day of_____.

The following work is to be Subcontracted:

Quantity	Unit	Item Description	Unit Price	Amount
			Total	_____

Unit Price for items being sublet:_____
Total_____contract amount_____= % to be sublet,
it being understood that the granting of this request in no way relieves the undersigned Contractor of his liability of obligation in the final execution and completion of the Contract.

Respectfully submitted,

_____
Contractor

CONSENT OF SURETY

We, the Surety on the contract bond covering the contract above referred to do hereby consent to the Subcontracting of the portions of the contract as set forth in the above request of the Contractor, and firmly bind ourselves to protect the _____ in the amount named in said bond and according to the terms thereof and agree that the liability of the surety will be in no way affected by this permission to the subletting of work under said contract.

Bonding Company:

_____ By _____

Highway Administration Approval

Recommended _____ 19__
By _____

Recommended _____ 19__
By _____

Recommended _____ 19__
By _____

Permission is hereby granted for subletting the portion of the contract as set forth in the foregoing request.

Approved this _____ day of _____, 19__.
By _____
Director General, Highway Administration

Refer to Standard Specification Section 109.1

CONTRACTOR'S PAYMENT VOUCHER

Intermediate payment vouchers are to be submitted once each month to the Construction Division. No intermediate payment voucher shall be made when the total value of the work done since the last payment is less than $500.00. Never make a payment voucher for anticipated quantities.

Heading

1. The Contractor, Contractor's address, project number, District, and type of construction, all appear in the contract and must be shown in like manner on the voucher.

2. The payment number must appear on all vouchers, including the final (i.e. - 4th & Final).

3. The date work started is the same as that which appears in the form, Notice to Proceed. This will be the first day that the Contractor actually performs work on the project.

Item Description

1. Intermediate: List items to be paid exactly as listed in the contract and in the same order of appearance. List only those items for which payment is to be made. No item can be listed until it is an approved part of the contract. To add an item to the contract, a Supplemental Agreement and/or Change Order must be approved. Any added item must appear under Extras and Contingencies only.

2. Final: Same as intermediate except that all items will appear as in the contract. (This includes items that have been eliminated). The final payment voucher must be accompanied by a final Change Order.

Unit

Enter as shown in contract or in an approved Change Order for each item.

Contract Quantity

Quantities will always appear as listed in the original contract.

Change Order Numbers

1. Intermediate: When paying on approved Change Order quantities, all Change Order forms bearing the item should be listed in numerical sequence (i.e., 1, 7, 8, 10).

2. Final: Each Change Order bearing the item will be listed in numerical order. The last Change Order number on the right will indicate the final change made on each item.

Adjusted Quantity

1. Intermediate: This quantity should be the same as the adjusted quantity on the highest numbered Change Order on which the item is shown. If no change has been made, leave blank.

2. Final: The final Change Order quantity for an item must appear in this column and will be the same as is shown on the highest number Change Order for the item.

Exception: If an item has been changed and/or the unit price has been changed, the notation "See Extras and Contingencies" should be shown here.

Quantity Completed to Date or Final

1. Intermediate: The pay quantity will be entered here. This will be the quantity used to compute the payment amount and will be the amount completed to the date of the estimate. The pay quantity will not exceed the contract quantity or if there is an approved Change Order, the item will not exceed this quantity.

2. Final: This quantity will be the same as the Adjusted Quantity or if the item has never been shown on a Change Order, it will be the same as the Contract Quantity.

Unit Price

Enter as shown on the contract for each item. Under Extras and Contingencies will be entered the unit price as approved by Supplemental Agreement and/or Change Order.

Amount

This will be the extension of the Quantity Completed and Unit Price.

Exception: When an item has been changed and is to be shown under Extras and Contingencies, this line will not be extended.

Extras and Contingencies - Materials Properly Stored But Not Used

New items added to the contract, or contract items on which the item description or unit price has been changed will be shown here as Extras and Contingencies. When payment is being made for cost-plus work, a Cost-Plus Statement of Extra Work must be submitted along with the payment voucher to provide supporting information.

Materials Properly Stored But Not Used when listed for payment shall be preceded by the caption "Stored Materials." Refer to Section 110.07 of the Standard Specifications in determining the proper allowances to be made concerning material payments.

Computation of Payment Due

1. To obtain the Grand Total of Completed Work, add the amount for each item to the Extras and Contingencies - Materials Properly Stored But Not Used.

2. On Intermediate Payment Vouchers, 90% of the Grand Total of Completed Work is paid the Contractor, or as otherwise noted in the Special Provisions.

3. Total previous payment to Contractor (this is the "Due Contractor" amount on the last previous voucher) is subtracted from the "Due Contractor" amount on this voucher to obtain "Amount of this payment to Contractor."

4. Item 2, "Previous Grand Total", Item 3, "Current Months Total (1-2)", and Item 7, "Current months Retaining (3-6)" are calculated by the originator but are used for accounting purposes only.

Deductions From This Payment

Deductions for liquidated damages, damaged salvaged material, deduction for deficient pavement for which no payment is to be made, etc., are made in the space.

Coding

1. Coding near the bottom of the form will be filled in by the Project Engineer preparing the voucher. The obligation number can be found on the project authorization form which should be on file in the project office.

2. The activity code will be one of two numbers, such as:

   - 351 is used for Contractor payments for services on a project done primarily with the Highway Administration's own in-house forces.

   - 391 is used for Contractor payments on projects being constructed primarily by Contractor forces.

3. The project number is the same number as found in the heading.

4. Leave the "Processed By" space blank, it will be used by central accounting personnel.

5. The blank space between the obligation and object spaces is to be used for any additional accounting data which might be available, i.e. Contractor invoices, receipted bills, etc.

Signature

1. The intermediate payment voucher may be signed by anyone who has been given authority to sign by the Contractor. The Project Engineer should have a letter from the Contractor authorizing persons to sign intermediate payment vouchers. The Contractor's name should be typed in.

2. Signing the final payment voucher must be done by the Contractor or one who has power of attorney for the Contractor. The Contractor's name should be typed in.

3. All copies of the intermediate and final payment voucher must be signed by both the Contractor and the Engineer.

Use additional sheets of this form when necessary if not enough space is provided on one sheet. In this case, type in the project number, type of construction, and payment number on the front of the additional sheets, number the sheets in sequence, and staple the sheets together.

Attached are two separate copies of Progress or Final Estimate forms with slightly different format. Either one will work satisfactorily.

Form No._____

Check No._____

Date_____

MINISTRY OF PUBLIC WORKS
HIGHWAY ADMINISTRATION

PROGRESS/FINAL ESTIMATE

Estimate No.____ for the period ending_____19__ District/Province_____ Proj. No.____

	Cumulative Total	Previous Total	Current Periods Total
Gross Payment Amount			
Retainage			
Other Deductions			
Net Payment Current Period			

Obligation No.	Object Code	Activity Code	Project No.	Processed by

Prepared by	Recommended for Approval	Approved

Contractor_____
Title_____
Date_____

Approved for Payment by the
HIGHWAY ADMINISTRATION
By_____ _____
Title_____
Date_____

Project No._____

TABULATION OF ITEMS

Enter original items in the same order as they appear in the Contract

Item Description	Unit	Contract Quantity	Change Order #	Work Accom. This Mo.	Quan. Comp. To Date	Unit Price	Amount
					Total		
Extras and Contingencies - Material Stored But Not Used							
GRAND TOTAL Completed Work (carry forward to front of sheet)							
					Total		

(Refer to Standard Specifications Section 110)

Form No._____

Check No._____
Date_____

MINISTRY OF PUBLIC WORKS
HIGHWAY ADMINISTRATION
CONTRACTORS FINAL/PROGRESS ESTIMATE

Contractor _____
Project No. _____ District/Province _____
Type of Construction _____ Bridge _____
Payment No. _____ Work Began _____ Estimate Period _____

COMPUTATION OF PAYMENT DUE

1. Grand total of completed work (brought forward from back of sheet)_____

	For Accounting:	
2. Previous grand total	_____	
3. Current month's total (1-2)	_____	
4. Due Contractor (grand total x 90%)	_____	_____
5. Total previous payment to contractor	_____	_____
6. Amount of this payment to contractor	_____	_____

DEDUCTION FROM THIS PAYMENT

Current month's retainage (3-6)	
Total Deductions	
Net Payment Due	

Checked by_____

Obligation No.	Object Code	Activity Code	Project No.	Processed by

Prepared by	Recommended for Approval	Approved

I do hereby certify that the above bill is just, correct and remains due and unpaid, and that amount claimed therein is actually due according to law.

Claimant _____
Firm Name

By_____
Date_____ 19____

I do hereby certify that the above amount was contracted for by the Highway Administration and that the amount shown therein is correct according to the contract and is unpaid. By Order of the HIGHWAY ADMINISTRATION

By_____
Date_____ 19____

Project No._____

TABULATION OF ITEMS

Enter original items in the same order as they appear in the Contract

Item Description	Unit	Contract Quantity	Change Order #	Work Accom. This Mo.	Quan. Comp. To Date	Unit Price	Amount
					Total		
Change Orders and Extras							
GRAND TOTAL Completed Work (carry forward to front of sheet)					Total		

(Refer to Standard Specifications Section 110)

ORDER TO CONTRACTOR TO SUSPEND WORK

This form will be used whenever suspension of work is ordered. This order is issued by the District Engineer whenever he believes a suspension of work is necessary to protect the interests of the Highway Administration.

A complete description and explanation must be given in the space provided as to the nature of the situation which made the suspension of work necessary. The reverse side of the form shall be used if additional space is required for this explanation.

The remaining spaces to be completed by the Engineer are self-explanatory.

Form No._____

MINISTRY OF PUBLIC WORKS
HIGHWAY ADMINISTRATION

ORDER TO CONTRACTOR TO SUSPEND WORK

Date_____

To _____ Project No._____

_____

_____

Gentlemen:

For the following reasons, you are directed to suspend operations on the above project on_____, 19__: _____

_____.

During this suspension of work, you will be required to comply with Section 108.12 of the Standard Specifications. You will resume operations only when directed to do so in writing by the Engineer on an Order to Resume Work.

Under terms of the contract for the above project_____calendar days/months are allowed to complete the project. In addition to this_____ calendar days/months have been added due to approval of Extra Work Orders and/or additional work, making a total of_____calendar days/months to complete the work. To date, _____calendar days/months have been used and there remains_____calendar days/months to complete the work.

Please sign the original and all copies in the space provided. Retain the original and return all copies to_____.

Receipt of this order is hereby acknowledged:

Date_____

Contractor_____

By_____

Title_____

Respectfully,

Director General of Highways

By_____

Title_____

Date_____

(Refer to Standard Specifications Section 108.15)

Distribution: Original-Contractor, copies - Construction Division, District Engineer and Project Engineer.

ORDER TO CONTRACTOR TO RESUME WORK

This form is to be used to order a resumption of work after an order to suspend work has been issued. The order to resume work will be issued by the same office as the order to suspend work.

This order will be given by the Engineer when, in his judgment, the conditions which necessitated suspension of the work no longer exist.

Form No._____

MINISTRY OF PUBLIC WORKS
HIGHWAY ADMINISTRATION

ORDER TO RESUME WORK

Date:_____
Project_____

To _____
_____
_____

Gentlemen:

Under date of_____, you were directed to suspend work on your contract. You are now directed to resume operations on this project on_____ _____ _____.

Under terms of the contract for the above project_____calendar days/ months have been used. In addition to this, _____calendar days/ months have been added due to approval of extra work orders and/or additional work, making a total of _____calendar days/months to complete the work. At the close of work on the date specified in the last suspension order_____of the_____calendar days/months had been used and assessment against the remaining_____calendar days/months will be resumed on the above date.

Please sign the original and all copies in the space provided, retain the original and return the copies to_____.

Receipt of this order is hereby acknowledged:
Date_____
Contractor_____
By_____
Title_____

Respectfully,

Director General of Highways
By_____
Title_____
Date_____

Distribution: Original - Contractor; Copies - Construction Division, District Engineer and Project Engineer

CHANGE ORDER

The purpose of this form is to document authorized changes in quantities of work -- either increases or decreases -- when those changes do not exceed 25% of the original amount. When changes exceed 25%, a supplemental agreement must be prepared.

In preparing a Change Order, the heading must be filled out completely, using the contract for the necessary information. Explain in detail all work to be performed keeping in mind you are only changing those quantities that are listed in the contract. You are not to add new items.

You must be familiar with Section 105.02 of the Standard Specifications. This section describes under what conditions a change order must be issued and the basic procedures regarding its preparation.

Form No._____

MINISTRY OF PUBLIC WORKS
HIGHWAY ADMINISTRATION

CHANGE ORDER

Date_____

Project No._____District/Province_____Change Order No._____
Contractor_____ Type Construction_____

Explanation of Changes:_____
_____
_____
_____
_____
_____

Quantities

Item No.	Description	Unit Price	Contract Quantities	Proposed Quantity Changes	Unit Price	Total
					Total	
					Total net increase or decrease	

This is to affirm that I have inspected this Change Order and hereby agree to all quantities and prices as shown.

Contractor_____
Title_____
Date_____

Recommend Approval_____
Date_____
Approved_____
Title_____
Date_____

SUPPLEMENTAL AGREEMENT

Supplemental Agreements must be executed when the following conditions occur:

1. Whenever it is proposed to change the unit price of any Contract item, or to change the unit of measurement.

2. Whenever the quantities exceed by 25% the bid quantities shown on the contract.

3. Whenever it is proposed that the wording of the Contract or Specifications be changed, or when Specifications, Supplemental Specifications, or Special Provisions are added, altered, or deleted.

4. Whenever it is proposed to change the scope or length of the project.

Whenever Contract Items, new Contract Items, or Unit Prices are involved, a Change Order is to be submitted with the Supplemental Agreement.

The date "Contract Entered Into" is the date the original Contract was approved, not the date the Supplemental Agreement was made out.

Do not fill in date at bottom of Supplemental Agreement where it says: "This agreement made and entered into this____day of_____, 19____. This date will be entered when the Supplemental Agreement is signed by the Director General and the Contractor.

Consent of Surety must be obtained as a part of the Supplemental Agreement.

Form No._____

MINISTRY OF PUBLIC WORKS
HIGHWAY ADMINISTRATION

SUPPLEMENTAL AGREEMENT

Number_____

Date_____

It is hereby understood and agreed by The Highway Administration and _____, the Contractor, that the contract entered into on Project No._____ and dated_____,19__ for the construction of_____ meters/miles/km/highways/bridges shall be supplemented in the following manner:

Detailed Explanation:_____

_____

_____

_____

_____

and that after the said changes have been made, such additions and changes are hereby directed to be part of the original Contract. The agreement as shown by the original Contract together with the above-named additions and changes shall constitute the Agreement and Contract of the parties hereto, and it is further agreed that upon obtaining the consent of the Surety thereon that the terms of the bond heretofore entered into between these parties shall include the additions and changes herein made the same as though such additions and changes were in the original Contract.

This agreement made and entered into this_____day of_____,19___.

Change Order No._____is attached hereto.
Recommended_____
Date_____
Recommended for approval_____
_____
Date_____

Highway Administration

By_____
Director General
Date_____

_____
Contractor

By_____

Title_____

Date_____

CONSENT OF SURETY

The _____ Company, surety and guarantor of the bond given by the above named Contractor, hereby agrees to the said additions and changes in said contract and firmly binds itself to protect the Highway Administration in the amount named in said bond and according to the terms thereof and agrees that said additions and changes shall be part of the original contract heretofore entered into and that the liability of this surety shall be the same as though said additions and changes had been placed in said original contract.

Name _____

By _____

Title _____

Date _____

EXTRA WORK ORDER

These forms are to be used only when an agreement cannot be reached between the Highway Administration and the Contractor on extra work that is required on a project. These forms are used to document the hours of labor, equipment and materials used. A detailed description of work must be furnished.

The Daily Report form is used as a summary sheet for extra work being performed on a cost-plus basis. The preparer should become familiar with Section 110.04 of the Standard Specifications for highways and bridges before preparing this form.

A completed copy of this form must accompany the Contractor's Estimate. The form must be signed and dated by the Engineer preparing the form and countersigned by the Contractor or his authorized agent certifying that the statement is true and correct. This must be done before the Contractor can be paid. An original copy of all forms is to be filed with the final estimate.

A. Heading

The heading information can be obtained from the contract. The "description of work completed" section should be as concise and clear as possible. The change order description authorizing the work will be helpful here.

B. Labor

1. Labor charges shown here are a summary of the detailed charges shown on the back of the form. Charges will be grouped by classes of labor, i.e. equipment operators, laborers, etc.

2. The detailed labor description on the form must show the name and classification of the employee. The date and number of hours worked by each employee must also be shown. The total number of hours worked during the reporting period, the employee's hourly rate and the total amount due each employee must also be shown.

C. Materials

1. The Engineer preparing this form should ensure that the requirements of Section 110.04(3) are met in regards to the material payment being made.

2. Transportation charges may include those costs the Contractor incurred using his own labor and equipment as well as those costs from outside shippers.

D. Rental on Equipment

Rental charges on the form are a summary of information shown.

These forms are included:

1. Extra Work Order

2. Extra Work Order Report Form

3. Daily Report Form

Form No._____

MINISTRY OF PUBLIC WORKS
HIGHWAY ADMINISTRATION

EXTRA WORK ORDER

Date_____

Project No._____District/Province_____Extra Work Order_____
Contractor_____Type of Construction_____

Description of Work_____

This agreement sets forth all labor and equipment rates to be used for this Extra Work Order in addition to all materials used.

Total Labor to be Used

Description	Rate per Hour	Estimated No. Hrs.	Total

Total Equipment to be Used

Material to be Used

Total + 10% = _____

Extra Work Order Form No._____, continued

Labor Rates

Classification	Hourly Rate

Equipment Rental Rates

Equipment Description	Hourly Rate

Material

Description	Unit Price

I hereby agree to the above labor and equipment rates, and to material costs as shown above.

Date_____
Contractor_____
By_____
Title_____

I certify that the labor, equipment and material rates as shown above represent a fair and just agreement between the Contractor and the Highway Administration.

Date_____
By_____
Title_____

Distribution: Original - Construction Division
Copies - Contractor, District Engineer, Project Engineer and Division of Accounting

Form No._____

MINISTRY OF PUBLIC WORKS
HIGHWAY ADMINISTRATION

EXTRA WORK ORDER REPORT FORM

Extra Work Order No._____ Date_____

Project No._____District/Province_____Type Construction_____

Contractor_____

The following labor, equipment and materials were used on this Extra Work Order:

Labor

Name	Classification	Hourly Rate	No. Hours	Total

Total Labor _____
% Overhead _____
TOTAL _____

Equipment

Description	Hourly Rate	No. Hours	Total

TOTAL _____

Extra Work Order Report Form, continued

Description	Material Unit Price	Total Units	Total

Total Materials _____

Bond and Insurance _____
Total Labor _____
Total Equipment _____
Total Material _____
% Overhead _____

Total Extra Work Order _____

I hereby agree to the above labor and equipment rates and to the unit cost of materials as shown above.

Date _____
Contractor _____
By _____

I hereby certify that the total of all labor and equipment rates and material unit rates are just and not paid.

Date _____
By _____
Title _____

Original to be included with Final Estimate.

Form No._____

MINISTRY OF PUBLIC WORKS
HIGHWAY ADMINISTRATION

DAILY REPORT FORM

Project No._____ Date_____

Extra Work Order

Description of Work Completed

Labor			
Classification	Hours Worked	Rate/Hour	Total
		Sub-Total	_____

Equipment			
Description	Hourly Rate	Total Hours	Total
		Sub-Total	_____

Material			
Description	Unit Price	Quantity	Total
		Sub-Total	_____

Daily Report Form, continued

Labor

Name	Classification	Dates when work Accomplished	Total/Hrs.	Rate	Total

Total Labor _____

Equipment

Description	Dates when work Accomplished	Total/Hrs.	Rate	Total

Total Equipment _____

I do hereby certify that the above is just and correct and is unpaid.

Date _____

Contractor _____

By _____

Prepared by _____

Title _____

Date _____

DAILY INSPECTOR'S REPORT

These reports are to be completed daily by each Inspector or Engineer.

Depending on the nature of the work, some Inspectors may be required to complete several different reports for the same day.

Other reports may cover only a small portion of a large item for any one day. A long bridge deck may, for example, require one hundred or more daily inspections, yet only one report is required.

At the end of each day, all Inspector's reports should be turned in to the Engineer's field office. Each day's slips will be stapled together and these will serve as the Highway Administration's record of the Contractor's activities for any given day for the Project.

Their completeness is essential to good record keeping and these basic, on-the-spot reports will become the documents referred to in cases of disputes, lack of Contractor progress, or reasons for inadequate performance of some portion of work on the project or commendation to the Contractor for outstanding work.

Form No._____

MINISTRY OF PUBLIC WORKS
HIGHWAY ADMINISTRATION

DAILY INSPECTOR'S REPORT

Project No._____ Weather_____ Date_____
Type of Construction_____
Location Station to Station_____

Description of Work and Remarks

_____ a. m. _____ p. m.
Hours worked - Contractor
_____ a. m. _____ p. m.
Hours worked - Inspector

_____
Signature of Inspector

Use reverse side for Additional Remarks.

BI-WEEKLY CONSTRUCTION REPORT

The Bi-Weekly Construction Report is a summary of all work accomplished in a two week period.

It must be accurate, concise and should show all major work efforts, and any unusual events that occurred during this reporting period.

You must show the number of men the Contractor has employed, the percent complete on major items worked on and the percent complete of construction staking.

It is important that this report be completed and the original and one copy forwarded to the District Office as rapidly as possible. Reports that are not accurate and current lose much of their value.

As with all reports originating at the project level, a copy must be retained in the project files.

Following is a suggested form, completed, showing details.

FIELD ENGINEERING AND CONSTRUCTION
BI-WEEKLY PROGRESS REPORT

Week Ending_____

I 192-1-15 U-1	Miller Purifoy Construction Co.
Project Number	Contractor Name
Paris East	Waldron, Arkansas
Location	Location
27.085 km	John Molar
Length	Resident Engineer
13-12-73 $5,533,587.80	350 calendar days
Contract Let and Amount	Contract Time
3-2-74	31-10-76
Work Started	Probable Completion Date

Progress has been good the past week. The first lift of plant-mix base was placed on the west bound lane from station 7+160 to 8+302 and on the temporary connection to the present traveled way. Unclassified excavation is being hauled from the cut at station 6+630 back to the area from 6+160 to 6+500 and from the cut section between stations 6+907 to 7+000. Unclassified excavation 48% complete. At station 11+417 the 36" x 788 RCP was installed making this item 79% complete. Digging the trench along railroad track for embankment protection is complete. The Project as a whole is 49% complete with 64% of the contract time elapsed. A total of 117 men were employed on the Project on a 10-hour shift. Construction layout with an 11 to 14 man engineering crew were engaged, this is 63% complete. Two visitors were on the Project this period besides regular staff personnel. These were the District Engineer, Mr. Jones and the Chief Construction Engineer from Central Headquarters, Mr. Park. No problems developed this week except for the drainage problem at Station 9+081. A change order has been prepared and approved.

PILE DRIVING REPORT

The Pile Driving Report is to be completed for any type of pile driven. Sheet piles used as part of a cofferdam item do not require a daily pile driving report.

Each report will cover one day's pile driving for any one structural unit.

The type hammer and blows/min. are from the manufacturer's data.

The order length column is only used when the order length of pile is specified by the Highway Administration. In some cases, the Contractor will determine the length of pile.

The actual length is the length of pile in the leads just prior to driving.

For timber piles, the tip and butt diameters will be specified.

The penetration column gives the final length of the pile as it will remain in the structure.

The cutoff is the difference between the actual length and the penetration length.

The blows for the two meters and the last centimeter are very important and should be accurately measured for each pile. These are used to determine the bearing capacity of the pile.

All important information regarding the piles on any one report must be shown under Remarks and on the back of the sheet, if more space is needed.

A sketch of the structural unit, showing the piles, should be made on the back of the first report for any unit. Numbers should be given each pile and used to identify the pile on the front of the sheet.

MINISTRY OF PUBLIC WORKS
HIGHWAY ADMINISTRATION

Project No._____ Structure Name/Number_____ Location_____

Daily Inspection Report Pile Driving_____ Date_____

Type of Hammer	Blows/ Min.	Contractor	Hrs. Worked

Pile No.	Order Length	Actual Length	Timber Pile Dia. Tip	Timber Pile Dia. Butt	Penetration	Cut off	Blows last 2m 5	4	3	2	1	Blows last cm	NOTES

Weather & Temperature	Contractor's Hrs. a.m. p.m.
Remarks	Labor & Equipment / Hours

Item No.	Description	Quantity

Inspector

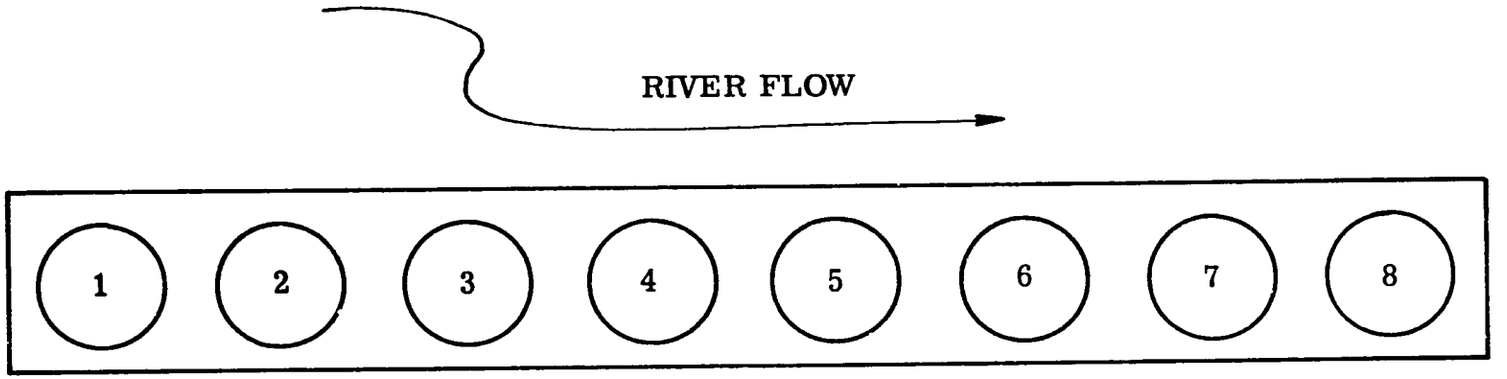

Pile Numbers Pier No. 3

EARTHWORK COMPUTATION SHEET

The earthwork computation sheets are intended for field and office use and many varied applications. Some of these uses are listed below to determine:

- Roadway cut and fill quantities
- Ditch excavation
- Excavated material from borrow pits
- Structural excavation
- Channel excavation
- Subsurface structure excavation

The degree of rounding off figures will vary with the type of excavation or embankment, the quantity involved, and other factors, and should be determined by the Project Engineer before sections are taken and calculations have been started. The attached form is to be used for all earthwork calculations.

Form No._____ Sheet_____ of_____

EARTHWORK COMPUTATION SHEET

Location_____ Date_____ Project No._____

Station_____ ch_____ Distance_____ ch_____ Grades_____ ch_____

Vert._____ ch_____ Areas_____ ch_____ Vol._____ ch_____ Mass_____

Grades & V.C.	V.C. Corr.	Corr. Elev.	Station	Area in Square Meters				Volumes in Cubic Meters							
				Cut		Fill		Excavation			EMB		Mass Curve Data		
				Area	Ave. Area	Area	Ave. Area	Clas.	Rock	Total	Act.	Emb	Cut	Fill	Mass

CERTIFICATE OF COMPLIANCE

This form is to be submitted by the Contractor for minor materials to be incorporated into the work. The form must be signed by the material manufacturer or producer and must clearly identify the material being submitted.

The use of certificates of compliance does not relieve the Contractor or the Project Engineer of responsibility for materials testing as outlined in Section 107 of the Standard Specification.

Form No._____

MINISTRY OF PUBLIC WORKS
HIGHWAY ADMINISTRATION

CERTIFICATE OF COMPLIANCE

Date_____

Project Number_____ Location_____

This is to certify that the material described hereinbelow fully complies with all the requirements of the Standard Specifications, plans and special provisions and all other specifications set forth for this Project.

It is understood that if the material does not substantially comply with the specifications as set forth in the Project documents that it will be rejected and that the removal and replacement cost will be at the Contractor's expense in accordance with Section 107.04 of the Standard Specifications.

Item	Quantity	Identification No.

Submitted by:_____ Date_____
Manufacturer of Product

Title_____

Date Received on Project _____

By_____

Title_____

Form No._____

MINISTRY OF PUBLIC WORKS
HIGHWAY ADMINISTRATION

CERTIFICATE OF ACCEPTANCE

Project No._____ _____Location_____Date_____

☐ Entire Contract ☐ Portion of Contract

TO_____Contractor

Highway District_____

Type of Construction (Highway/Bridges)_____

Length of Project_____(kilometers, miles, meters)

Date Contractor Completed Work_____

You are hereby notified that the (entire contract/portion of contract) described as follows_____

_____

_____was accepted on_____, 19___.

You are relieved of any further responsibility to this portion of your contract subject to the following conditions:_____

_____

_____

Recommended by_____ Approved by_____

Date_____ _____Date_____

Title_____Title_____

This is to affirm that I agree to the acceptance of the portion of contract described herein and to the conditions stated above.

_____

Contractor

Dated_____By_____

NOTE: Constractor's signature required only for acceptance of portion of contract. This form to be sent to Contractor and to the Chief Division of Construction on date of acceptance of project.

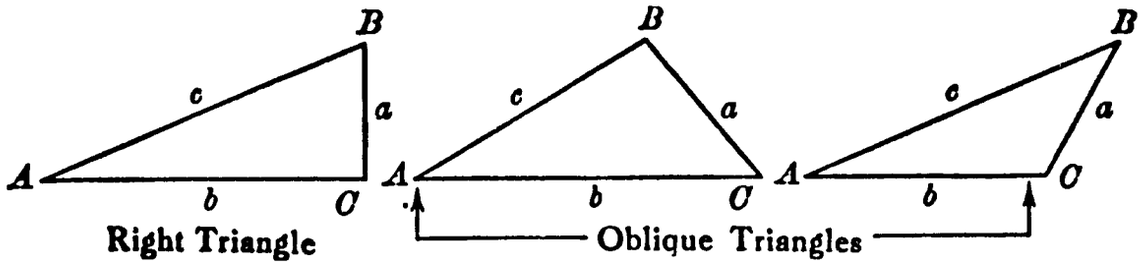

Solution of Right Triangles

For Angle A. $\sin = \frac{a}{c}$, $\cos = \frac{b}{c}$, $\tan = \frac{a}{b}$, $\cot = \frac{b}{a}$, $\sec = \frac{c}{b}$, $\operatorname{cosec} = \frac{c}{a}$

Given	Required	
a, b	A, B, c	$\tan A = \frac{a}{b} = \cot B,\ c = \sqrt{a^2 + b^2} = a\sqrt{1 + \frac{b^2}{a^2}}$
a, c	A, B, b	$\sin A = \frac{a}{c} = \cos B,\ b = \sqrt{(c+a)(c-a)} = c\sqrt{1 - \frac{a^2}{c^2}}$
A, a	B, b, c	$B = 90° - A,\ b = a \cot A,\ c = \frac{a}{\sin A}.$
A, b	B, a, c	$B = 90° - A,\ a = b \tan A,\ c = \frac{b}{\cos A}.$
A, c	B, a, b	$B = 90° - A,\ a = c \sin A,\ b = c \cos A,$

Solution of Oblique Triangles

Given	Required	
A, B, a	b, c, C	$b = \frac{a \sin B}{\sin A},\ C = 180° - (A + B),\ c = \frac{a \sin C}{\sin A}$
A, a, b	B, c, C	$\sin B = \frac{b \sin A}{a},\ C = 180° - (A + B),\ c = \frac{a \sin C}{\sin A}$
a, b, C	A, B, c	$A + B = 180° - C,\ \tan \frac{1}{2}(A - B) = \frac{(a-b) \tan \frac{1}{2}(A+B)}{a + b},$ $c = \frac{a \sin C}{\sin A}$
a, b, c	A, B, C	$s = \frac{a+b+c}{2},\ \sin \frac{1}{2}A = \sqrt{\frac{(s-b)(s-c)}{b\,c}},$ $\sin \frac{1}{2}B = \sqrt{\frac{(s-a)(s-c)}{a\,c}},\ C = 180° - (A+B)$
a, b, c	Area	$s = \frac{a+b+c}{2},\ \text{area} = \sqrt{s(s-a)(s-b)(s-c)}$
A, b, c	Area	$\text{area} = \frac{b\,c \sin A}{2}$
A, B, C, a	Area	$\text{area} = \frac{a^2 \sin B \sin C}{2 \sin A}$

TABLES AND CONVERSION CHARTS

SIEVE OPENINGS

March 1975

Sieve Designation		Normal Sieve Openings		AASHO M 92-70	Tolerance Range	
Standard MM	Alter-nate	Inches	Microns	Tolerance MM	MM	Inches
90	3½ in.	3.5		±2.7	87.3-92.7	3.437-3.650
75	3 in.	3		2.2	72.8-77.2	2.866-3.039
50	2 in.	2		1.5	48.5-51.5	1.909-2.023
37.5	1½ in.	1.5		1.1	36.4-38.6	1.433-1.523
25.0	1 in.	1.0		0.8	24.2-25.8	0.953-1.016
19.0	3/4 in.	0.750		0.6	18.4-19.6	0.724-0.728
12.5	1/2 in.	0.500		0.39	12.11-12.89	0.477-0.503
9.5	3/8 in.	0.375		0.30	9.20-9.80	0.362-0.336
6.3	1/4 in.	0.250	(No. 3)	0.20	6.1-6.5	0.240-0.256
4.75	No. 4	0.187	4750	0.15	4.60-4.90	0.181-0.193
2.38	No. 8	0.093	2360	0.080	2.28-2.44	0.0898-0.10
2.00	No. 10	0.078	2000	0.070	1.93-2.07	0.0760-0.
1.70	No. 12	0.0661	1700	0.060	1.64-1.76	0.035
1.18	No. 16	0.0469	1180	0.045	1.135-1.225	0.0447-0.5
0.850	No. 20	0.0331	850	0.035	0.815-0.885	0.0321-0.35
0.600	No. 30	0.0234	600	0.025	0.575-0.625	0.0226-0.3
0.500	No. 35	0.0197	500	0.020	0.480-0.520	0.0189-0.02
0.425	No. 40	0.0165	425	0.019	0.406-0.444	0.0160-0.01
0.300	No. 50	0.0117	300	0.014	0.286-0.314	0.0113-0.01
0.250	No. 60	0.0098	250	0.012	0.238-0.262	0.0094-0.01
0.180	No. 80	0.0070	180	0.009	0.171-0.189	0.0067-0.01
0.150	No. 100	0.0059	150	0.008	0.142-0.158	0.0056-0.01
0.075	No. 200	0.0029	75	0.005	0.070-0.080	0.0028-0.00

CONVERSION TABLES

Length Measurements

1 inch = 0.0833 ft. = 2.54 cm
1 foot = 12 inches = 30.48 cm = 0.3048 meter
1 yd. = 3 ft. = 0.9144 meter
1 rod = 16.5 ft. = 5.029 meters
1 chain = 66 ft. = 4 rods = 20.117 meters
1 mile = 5280 ft. = 320 rods = 1.6093 kilometers
1 mm = 0.039 inch = 0.1 cm
1 cm = 0.3937 inch = 0.01 m
1 meter = 39.37 inches = 3.2808 feet = 0.001 kilometer
1 kilometer = 3280.8 ft. = 1093.6 yds. = 0.62137 mile

Area Measurements

1 sq. in. = 6.4516 sq. cm
1 sq. ft. = 144 sq. in. = 929.03 cm^2
1 sq. yd. = 9 sq. ft. = 0.83613 m^2
1 acre = 43560 sq. ft. = 4046.856 m^2
1 sq. mile = 640 acres = 2.5900 km^2
1 sq. cm = 0.15500 sq. in. = 0.0001 m^2
1 sq. meter = 10.764 sq. ft. = 1.1960 sq. yd.
1 sq. km. = 0.38608 sq. mile

Volume Measurements

1 cu. inch = 16.387 cc = 0.016387 liters
1 cu. ft. = 1728 cu. inches = 28.316 liters
1 cu. yd. = 27 cu. ft. = 0.76455 cu. meter
1 gallon = 4 quarts = 8 pints = 3.78533 liters
1 petroleum barrel = 42 gals. = 158.984 liters
1 cc = 0.061 cu. in. = 1000 mm^3
1 cubic meter = 35.315 cu. ft. = 1.3079 cu. yds. = 1000 liters
1 liter = 1000 cc = 0.264178 gal.

Weight Measurements

1 ounce = 28.350 grams
1 pound = 16 ounces = 453.592 grams
1 ton (short) = 2000 pounds = 907.18 kg = 0.90718 metric ton
1 gram = 0.03527 ounces = 0.001 kg
1 kg = 35.2739 ounces = 2.2046 pounds
1 ton (metric) = 2204.62 pounds = 1.10231 tons (short) = 1000 kg

Water

1 cu. ft. = 7.5 gal. = 62.4 lbs.
1 gal. = 231 cu. in. = 8.33 lbs.

Estimated Equivalents

1 cu. meter of:

Concrete	=	2,407 kg	=	5,297 lbs.
Undisturbed clay				
Dry	=	1,762 kg	=	3,885 lbs.
Wet	=	2,162 kg	=	4,767 lbs.
Compacted clay	=	2,076 kg	=	4,578 lbs.
Sand				
Loose	=	1,602 kg	=	3,531 lbs.
Consolidated	=	1,842 kg	=	4,061 lbs.
Stabilized Gravel	=	2,254 kg	=	4,970 lbs.

MISCELLANEOUS CONVERSION FACTORS

Multiply	By	To Obtain
Pounds per foot	1.48816	Kilograms per meter
Pounds per sq. ft.	4.88241	Kilograms per sq. meter
Pounds per sq. inch	0.07031	Kilograms per sq. cm
Pounds per cubic foot	16.0184	Kilograms per cu. meter
Feet per second	0.6818	Miles per hour
Miles per hour	88	Feet per minute
Miles per hour	1.46667	Feet per second
Kilometers per hour	54.68	Feet per minute
Kilometers per hour	0.9113	Feet per second
Kilometers per hour	16.67	Meters per minute
Liters	0.03531	Cubic feet
Liters	61.02	Cubic inches
Liters	0.2642	Gallons
Cubic feet per minute	472.0	Cubic cms per second
Cubic feet per minute	0.1247	Gallons per second
Cubic feet per minute	0.4720	Liters per second
Gallons per minute	0.06308	Liters per second
Hectares	2.471	Acres
Kilograms per cu. meter	0.06243	Pounds per cu. ft.
Kilograms per sq. meter	0.2048	Pounds per sq. ft.

TEMPERATURE CONVERSION

Degrees Fahrenheit = 9/5C° + 32°

Degrees Centigrade = 5/9(F°- 32°)