ARDA

AGENCY FOR INTERNATIONAL DEVELOPMENT
WASHINGTON, D. C. 20523
BIBLIOGRAPHIC INPUT SHEET

FOR AID USE ONLY
BATCH 77

1. SUBJECT CLASSIFICATION

A. PRIMARY: Education — JM10-0000-G360

B. SECONDARY: Educational radio - Nicaragua

2. TITLE AND SUBTITLE

The radio mathematics project; Nicaragua, 1974-1975

3. AUTHOR(S)

Searle, Barbara; Friend, Jamesine; Suppes, Patrick

4. DOCUMENT DATE	5. NUMBER OF PAGES	6. ARC NUMBER
1976	~~274p.~~ 177p.	ARC

7. REFERENCE ORGANIZATION NAME AND ADDRESS

Stanford

8. SUPPLEMENTARY NOTES *(Sponsoring Organization, Publishers, Availability)*

9. ABSTRACT

Reports the first experimental year of a research project designed to investigate the use of radio to teach mathematics in the primary school classrooms of Nicaragua. The bulk of work to date concerns methods of organizing curriculum and structuring lessons to exploit the unique characteristics of radio as an instructional medium. Project activities to produce radio lessons began in 1974 with an experiment conducted on several kindergarten and first-grade classes in California. That study is described in Chapter 2 and lays the groundwork for all further lesson development. A second series of pilot lessons were prepared and given in Nicaragua to provide a further test of the basic lesson design and training and experience for the staff. Other chapters in the book discuss the preparation and administration of an achievement test, the structure of the curriculum, instructional methods and principles, radio lesson designs, practical aspects of the project implementation in Nicaragua, and the results of the first experimental year. During the experimental work the Project developed a successful lesson format that had two parts--the radio portion and the postbroadcast portion. Final remarks concern some conclusions about using radio for instructional purposes, the problems of teaching children who have restricted backgrounds, and some comparisons between children in California and in rural Nicaragua. Six appendices include: Data Tables; Item Descriptions, 1974 First-grade Achievement Test; Adaptation of Kleinke Procedure for Estimating Student Scores; Lesson 96 Materials; Terminal Curriculum Objectives for First Grade; and Lesson Outlines for 1975 First-grade Curriculum.

10. CONTROL NUMBER

PN-AAF-178

11. PRICE OF DOCUMENT

12. DESCRIPTORS

Mathematics
Nicaragua
Projects
Educational radio

13. PROJECT NUMBER

14. CONTRACT NUMBER

AID/CM/ta-C-73-40 Res.

15. TYPE OF DOCUMENT

AID 590-1 (4-74)

THE RADIO MATHEMATICS PROJECT:

Nicaragua 1974-1975

THE RADIO MATHEMATICS PROJECT:

Nicaragua 1974-1975

BARBARA SEARLE, JAMESINE FRIEND, and PATRICK SUPPES
in collaboration with
BARBARA PARNESS, JANE SACHAR, THOMAS TILSON,
VITALIA VROOMAN, and MARIO ZANOTTI

sponsored by

THE GOVERNMENT OF NICARAGUA

and

THE TECHNICAL ASSISTANCE BUREAU
UNITED STATES AGENCY FOR INTERNATIONAL DEVELOPMENT

1976
INSTITUTE FOR MATHEMATICAL STUDIES IN THE SOCIAL SCIENCES
STANFORD UNIVERSITY
STANFORD, CALIFORNIA

© 1976, by Leland Stanford Junior University

ALL RIGHTS RESERVED
NO PART OF THIS BOOK MAY BE REPRODUCED IN ANY FORM,
BY PHOTOSTAT, MICROFILM, OR ANY OTHER MEANS,
WITHOUT WRITTEN PERMISSION FROM THE PUBLISHERS.
REPRODUCTION IN WHOLE OR IN PART FOR ANY PURPOSE
OF THE UNITED STATES GOVERNMENT IS PERMITTED.

INSTITUTE FOR MATHEMATICAL STUDIES IN THE SOCIAL SCIENCES
Ventura Hall, Stanford University, Stanford, CA 94305

PRINTED IN THE UNITED STATES OF AMERICA

TABLE OF CONTENTS

	Page
List of Figures	vii
List of Tables	viii
Foreword	xiii
Chapter	
1. History and Description of the Project	1
2. California Pilot Radio Lessons	9
3. Nicaragua Pilot Radio Lessons	31
4. Nicaragua First-grade Achievement Test	43
5. Curriculum Structure	69
6. Instructional Methods and Principles	85
7. Radio Lesson Design	99
8. Operation of the Project	115
9. Results	127
Appendix A. Data Tables	155
Appendix B. Item Descriptions, 1974 First-grade Achievement Test	171
Appendix C. Adaptation of Kleinke Procedure for Estimating Student Scores	177

CONTENTS

Page

Appendix D. Lesson 96 Materials 181

Appendix E. Terminal Curriculum Objectives for First Grade 201

Appendix F. Lesson Outlines for 1975 First-grade Curriculum 213

References 255

Index 259

LIST OF FIGURES

Figure		Page
2-1.	Student worksheet for California pilot lesson, side 1 (reduced size)	14
2-2.	Student worksheet for California pilot lesson, side 2 (reduced size)	15
3-1.	Student worksheet for Nicaragua pilot lesson, side 1 (reduced size)	34
3-2.	Student worksheet for Nicaragua pilot lesson, side 2 (reduced size)	35
4-1.	Nicaraguan first-grade curriculum: Condensed version of outline prepared by the Ministry of Public Education	45
5-1.	Graph of partial ordering for fractions classes	76
7-1.	Outline for Lesson 96 (translated)	104
7-2.	Notes to script writer for Lesson 96 (translated)	105
7-3.	Student worksheet for Lesson 96, side 1 (reduced size)	109
7-4.	Student worksheet for Lesson 96, side 2 (reduced size)	110
9-1.	Matrix-sampling design of achievement test	143

LIST OF TABLES

Table		Page
2-1.	Content of Lesson Segments	11
2-2.	Order of Segments in each Lesson	12
2-3.	Cells for Data Analysis	20
2-4.	Mean of Proportion of Correct Responses for Successor Exercises	23
2-5.	Analysis of Variance Table for Cells 12, 13, 14, and 15	23
2-6.	Parallel Segments	25
2-7.	Proportion of Correct Responses in Memory and Dictation Exercises	26
2-8.	Analysis of Variance Table for Cells 1, 2, 3, and 4	26
2-9.	Proportion Correct on Four Types of Reinforced Items	28
3-1.	Number of Pilot-lesson Segments by Topic and Lesson	33
3-2.	Performance on Pilot Lesson Segments	39
3-3.	Mean Performance on Pilot Lessons by Class	41
4-1.	Distribution of Equivalence Classes Among Strands in Test Domain and Test	46
4-2.	Performance on Eight Subtests of Pilot Test	48
4-3.	Distribution of Item Scores for Pilot Test	49

TABLES

Table		Page
4-4.	Proportion Correct on Pilot Test by Strand	50
4-5.	Pilot Test Items Ordered by Difficulty from Addition of Integers Strand	51
4-6.	Comparison of Content of Pilot and Final Achievement Tests	53
4-7.	Performance on Eleven Subtests of Final Test	56
4-8.	Number of Students Involved in Cooperative Answering on Question 5	57
4-9.	Proportion Correct on Final Test by Strand	58
4-10.	Items with Highest and Lowest Percent Correct on Final Achievement Test by Strand	59
4-11.	Performance on Word Problems	61
4-12.	Frequency of Use of Wrong Arithmetic Operation: Addition Instead of Subtraction	62
4-13.	Frequency of Use of Wrong Arithmetic Operation: Addition Instead of Multiplication	63
4-14.	Summary Statistics Using Total Scores Estimated by Kleinke Procedure	65
5-1.	Teaching Topics from the Numeration Strand for Lessons 1 to 15 and 76 to 90	74
5-2.	Exercise Classes for Fractions Strand, Lessons 116 to 150	77
5-3.	Distribution of First-grade Lesson Segments Among Strands	79
7-1.	Summary Statistics for Instructional Portion of Lesson 96	111

TABLES

Table		Page
7-2.	Frequency of Response Types in Lesson 96 . . .	113
7-3.	Linguistic Characteristics of Script for Lesson 96	114
8-1.	Indices of Urbanization	116
8-2.	Number of Pupils per Grade, Department of Masaya, 1974	118
8-3.	Age Distribution of First-grade Students Test Population	119
9-1.	Comparison of Several Characteristics of Scripts at Different Stages of Script Development	128
9-2.	Mean Performance by Segment for Lesson 96, Worksheet Responses	133
9-3.	Performance on Exercises from Segment 6, Lesson 96	134
9-4.	Distribution of Student Scores for Segment 6	137
9-5.	Performance of First-grade Students on TOBE Test by Concept	140
9-6.	Student Performance on Pretest	141
9-7.	Attainment of Minimal and Advanced Objectives by First-grade Experimental Students	144
9-8.	Comparison of Scores of Experimental and Control Students by Topic	146
9-9.	Posttest Performance--Item Scores	147
9-10.	Comparison of Performance on Related Oral and Written Items: Traditional and Experimental Students, 1975	148

TABLES

Table Page

9-11. Comparison of Performance on Oral Computation Exercises and Oral Word Problems: Traditional and Experimental Students, 1975 149

FOREWORD

Developing countries around the world face common critical educational problems: shortages of schools, trained teachers, and administrators, as well as irrelevant or nonexistent textbooks and instructional materials. Significant percentages of the school-age population either do not enter school or having entered, drop out before obtaining basic reading, language, and computational skills. The severity of these conditions obviously varies from country to country, but in all instances the educational opportunity of those children in the remote countryside is less than those in the major urban areas.

The Foreign Assistance Act of the United States, as amended in 1973, directed the Agency for International Development (AID) to focus its program on the "poor majority" in the least developed countries. Although a significant portion of the world's poor surround major urban centers, the majority live in more remote areas in which essential social services often do not reach. Consequently, in conjunction with developing countries, AID has been exploring the potential uses of educational technology to provide for those people more and better educational opportunities.

Because of its inherent low cost and already pervasive presence in the developing world, radio appears promising as a medium of instruction. Radio programs can be heard in the most remote regions of developing countries. However, relatively little is known about its instructional effectiveness when compared with research on other means of instruction.

The work of Stanford University and the Nicaraguan Ministry of Public Education reported in this volume constitutes one of AID's largest and most important educational research efforts. This project is designed to answer some key questions about the most efficient and effective methods for developing and improving instructional radio programs based upon learner performance. The content of this project is restricted to mathematics. The results, however, will be explored in

further projects for applicability to other subject matter areas in the formal school setting and for out-of-school learning as well.

The major intent of this report is to share information early in the life of the project with those interested in educational development. Comments, suggestions, and criticisms are invited and welcome. The more that information can be shared now, the more likely it will be that the results of this project will make a solid contribution to the further development of radio as a means of delivering instruction.

David M. Sprague
Education Technology Officer
Bureau for Technical Assistance
Agency for International Development

THE RADIO MATHEMATICS PROJECT

CHAPTER 1

HISTORY AND DESCRIPTION OF THE PROJECT

Over the past two decades, the field of instructional technology has grown to include sophisticated uses of programmed learning, color television, and computers, and yet the instructional use of radio, an economical and easily available medium, remains relatively unexplored. Radio has been used for instruction since the early 1920s and has found increasing use in developing countries. Nevertheless, a recent survey of experimental and empirical studies of the effectiveness of teaching by radio (Jamison, Suppes, & Wells, 1974) found few studies in which radio carried the major burden of instruction and none that examined the relation of curriculum structure to student achievement.

This volume reports on the first experimental year of a research project designed to investigate, in a detailed and systematic way, the use of radio to teach mathematics in the primary-school classrooms of a developing country. Extensive collection of student response data, along with an explicit model for curriculum development, makes possible the type of study previously absent from the research literature.

In July 1973 the United States Agency for International Development (AID) contracted with the Institute for Mathematical Studies in the Social Sciences (IMSSS) at Stanford University to carry out a two-stage project. During the first stage, which occupied the first funding year, members of the Institute staff visited several developing countries, whose governments had expressed an interest in teaching by radio, and selected from among them a suitable project site. The second stage of the project, undertaken in conjunction with the Ministry of Education of Nicaragua, is devoted to the development and evaluation of the radio instructional system. At present, the Radio Mathematics Project operates with financial support from both AID and the Government of Nicaragua.

THE RADIO MATHEMATICS PROJECT

Nicaragua was selected as the project site from among twelve prospective countries: four in Asia, two in Africa, and six in Latin America. In making the choice, we eliminated from consideration those countries in which primary-grade students are not taught in their native language and those countries that are already using radio for in-school instruction. We gave favorable consideration to countries that agreed to support the Project with local facilities and personnel. The site visits and country selection process are described in Searle (1974).

The research aims of the Project can be broadly characterized in terms of educational achievement, the economics of radio as an instructional medium, and the generalizability of the results to other settings. Although we present here some results related to economics and generalizability, the bulk of our work to date concerns methods of organizing curriculum and structuring lessons to exploit the unique characteristics of radio as an instructional medium. Because the radio lessons carry the major burden of instruction in the classroom, attention to the details of curriculum design is crucial to the program's success.

Research Context of the Study

Our strong concern with instructional effectiveness is probably the chief difference between our Stanford project and most of the projects elsewhere that have used radio in the classroom. The intent of many radio programs about mathematics has been to illustrate the applicability of mathematics to everyday life or to present enjoyable stories with mathematical content that the writers hope will stimulate the students' interest.

The closest parallel to our efforts is the TV program Sesame Street (Lesser, 1974), which has adopted specific instructional goals that are incorporated into lively and entertaining hour-long programs. However, Sesame Street differs from our programs in three important ways. First, of course, is the availability of the visual component provided by TV. Second, since Sesame Street is not

typically shown in schools, it must capture its audience and therefore must employ sophisticated techniques for attracting the attention of media-saturated children. The children we work with have no choice about listening to our program but, on the other hand, have probably rarely heard a radio program written for children. Thus, although we want programs to be enjoyable for the children, we do not have the same requirements for attention-getting. The third, and perhaps most important, difference between Sesame Street and our project is our goal of providing sequential instruction. Sesame Street programs are written so that a child can understand each segment without having seen previous segments. In contrast, we are designing an instructional program in which earlier lessons are prerequisites for later ones.

Systematic instruction by radio is found most often outside the United States. McAnany (1973), in a survey of worldwide uses of radio in national development, lists twenty countries that use radio for formal instruction. There are undoubtedly more countries than have been reported in the literature (e.g., a school broadcasting program we visited in Swaziland is not on the list). McAnany notes that the most common technique is to select a few school subjects for radio instruction, as in Thailand (Schramm, 1967), where music, social studies, and English were taught, or as in the Sudan (Phillips, 1964), where radio was used to teach Arabic, tribal history, and social manners. Mathematics is rarely included in this list. As McAnany points out, there has been relatively little work in curriculum development.

> There is a continuum of experience in instructional radio from the relatively unsophisticated programming of the Tarahumara project where the content for the broadcasts was simply read out of a common textbook (Schmelkes, 1973) to Brazilian programs using carefully developed curriculum, daily practice, and carefully evaluated feedback (NASA, 1972). Most instructional radio projects, however, have fallen at the relatively unsophisticated end of the continuum. (p. 8)

Chu and Schramm (1967), in a review of the effectiveness of instructional television, numbered the principal conclusions of their survey. Three that are relevant to instructional radio are:

53. Given favorable conditions, pupils can learn from any instructional media that are now available.
58. The use of visual images will improve learning of manual tasks, as well as other learning where visual images can facilitate the association process. Otherwise, visual images may cause distraction and interfere with learning.
60. Student response is effectively controlled by programmed methods, regardless of the instructional medium.

Chu and Schramm's study has recently been updated and, in an introductory essay, M. C. Stanford (1975) contributes four more generalizations about instructional radio (IR).

IR 1. Given favorable conditions, pupils can learn effectively from instructional radio.
IR 2. Instructional radio is probably more effective than other nonaural media for instruction of certain topics, particularly music and foreign languages.
IR 3. There is no apparent difference in instructional radio as an aural medium as compared to print media in effecting attitude change.
IR 4. In developing nations, the most frequent apparent successful use of instructional radio is in conjunction with other media or interpersonal communication campaigns.

With regard to IR 1, Stanford remarks that "unfortunately little can be said about precisely what the 'favorable

conditions are." About the studies he cites he says, "All of these studies were conducted more than fifteen years ago and are disparate in rigor, program topics, and the level of communication environment which existed at the time and place of the studies. Nevertheless, the consistency of the results favors the conclusion" (p. iv). Jamison et al. (1974), in their review, reach a similar conclusion and suggest that "due to the limited number and scope of good evaluations now available, and to the potential economic significance of instructional radio for developing countries, much more research--both survey and experimental--is highly desirable" (p. 34). It is to this end that the present study is being conducted.

Work of IMSSS

Since its inception in 1959, the Institute for Mathematical Studies in the Social Sciences has been active in the field of mathematics education at the primary-school level. Early programs explored the teaching of geometry and logic to older elementary-school students (Hawley & Suppes, 1959; Suppes & Hill, 1962). In 1959, the Sets and Numbers project was initiated and resulted in the publication of a text series for elementary-school mathematics which, in revised form, remains in use. Another program investigated the possibilities of broadening and enriching mathematics instruction for gifted students (Suppes & Hansen, 1965; Suppes & Ihrke, 1967).

In 1963, the Institute turned its attention to the use of computers in education (Suppes, 1972). The first operational instructional program (in mathematical logic), was used in schools starting in 1964. Drill-and-practice arithmetic lessons were initiated in 1964, and the first relatively large-scale operation at a remote location began in 1965. During the 1966-67 school year the program reached 1,500 California students. In subsequent years enrollment continued to expand, reaching 4,353 students in California, Iowa, Kentucky, and Mississippi by May 1968. A complete revision of the mathematics curriculum for Grades 1 through 6 was accomplished during the 1969-70

school year, using a strand structure for organizing the curriculum. The strands drill-and-practice arithmetic program is described in Suppes, Searle, and Lorton (1976).

In the summer of 1964, IMSSS was granted a contract by the United States Office of Education to establish a computer-based instructional laboratory at a public elementary school for the purpose of investigating computer-assisted instruction over an extended period of time.

The Brentwood Laboratory, funded by this grant, was used to teach mathematics and reading to elementary-school children and to collect data on their learning behavior. Mathematics curriculum materials for the first and second grades were developed, providing individualized instruction in a rich environment that included a computer terminal (equipped with audio and a cathode-ray tube) and facilities for individual slide presentations. A full description of this work appears in Suppes and Morningstar (1972).

The use of computer-assisted instructional programs has allowed the collection of a large body of performance data on mathematics learning (Suppes, 1974; Suppes, Jerman, & Brian, 1968; Suppes & Morningstar, 1972; Suppes et al., 1976). The analysis of these data, as well as the experience gained in the construction and presentation of mathematics lessons in several modalities, has provided a firm foundation for the research in mathematics instruction by radio that we report here.

Description of the Project

The Radio Mathematics Project assumes responsibility for all of the mathematics instruction received by children in the experimental classrooms. No other mathematics curriculum is presented.

During 1975, a daily Project lesson was presented by tape recorder in first-grade classrooms. The recorded portion of the lesson, approximately 25 minutes in length, was followed by approximately 20 minutes of teacher-directed activities, for which instructions were provided in a Project-developed teacher's guide. No

textbooks were used and printed material was limited to a one-page worksheet for each child each day. All instruction, including the radio lesson, was given in Spanish. (The recorded portion of the lesson, although presented by tape recorder, is referred to throughout this book as the radio lesson.)

During the radio lesson, children were asked to respond orally, physically, and in writing. Oral responses included singing and giving answers to arithmetic exercises and other questions asked by radio characters. Physical responses included moves in simple games, work with concrete materials, and finger counting in arithmetic exercises. Written responses were almost all on the worksheet. They included drawing as well as writing the answer to printed and oral exercises. The response rate was kept high--approximately 40 to 60 responses during a radio lesson--to engage the interest of the children and to facilitate their learning.

The Project provided direction to teachers by means of a guide that accompanied each lesson. The teacher played a limited role during the broadcast portion of the lesson, mostly helping slower children with written work. After the broadcast she presented the remainder of the Project lesson. Teacher-training sessions, before and during the school year, helped orient teachers to their new instructional role.

Overview of the Book

Project activities directed toward the production of radio lessons began in the spring of 1974 with an experiment conducted in California. Five lessons (in English) were produced and tested in several kindergarten and first-grade classes near Stanford University. That work, described in Chapter 2, laid the groundwork for all further lesson development.

A second series of pilot lessons, prepared and given in Nicaragua during the fall of 1974, provided a further test of the basic lesson design adopted by the Project. Preparation of these lessons also provided training and experience for the staff. This work is discussed in Chapter 3.

A third major activity of 1974 was the preparation and administration of an achievement test for first-grade students at the end of the school year. Chapter 4 describes the test and what we learned about the capabilities of Nicaraguan children.

The remainder of the book describes the work conducted during 1975. Chapter 5 discusses the structure of the curriculum. Chapter 6 examines the instructional methods and principles that guided the work of the Project. Building on these presentations, Chapter 7 describes the design of radio lessons. The practical aspects of the implementation of the Project in the Nicaraguan setting are the subject of Chapter 8. Finally, the results of the first experimental year are presented in Chapter 9.

We chose to present the work of the first experimental year, rather than wait for publication of final results, because we felt that a report of our early work will prove of interest to the research community concerned with the use of technology for instruction. We also believe that a record of the evolutionary changes the project undergoes over the years will provide a useful research record. For that reason we plan to follow this volume with another at the completion of each experimental year. This seems to us a fruitful way to show the development of methods and procedures, as well as results.

CHAPTER 2

CALIFORNIA PILOT RADIO LESSONS

During the period before the Project began operations overseas, we conducted a field trial of radio mathematics lessons in a California elementary school. Our preliminary conception of a suitable lesson structure was untested, and we felt that we could learn much from a trial in an American setting. The projected lesson design called for the presentation of several topics during each lesson, a high rate of response from the students, and the use of a printed page both as an answer sheet and as a source of visual displays.

The major questions addressed by the study were:

1. Can children keep pace with frequent changes of topics?
2. Will children respond appropriately aloud? On the worksheet?
3. Are children attentive to the instructional portions of the radio lesson? To the entertainment portions of the lesson?
4. What should the classroom teacher do during the lesson?
5. What can we learn about response times and the relative difficulties of exercise types, stimulus formats, and response modes?
6. What problems will we encounter?

The field trial used five lessons presented by tape recorder to two kindergarten and two first-grade classes in a middle-income school near Stanford University. Lesson production and administration were handled by several research aides who were trained by a Project staff member.

The lessons provided the first trial of the segmented lesson structure that we have subsequently adopted. Each

---

The authors thank Jane Sachar and Barbara Parness for their work on this chapter.

lesson contained instructional material on five or six mathematics topics embedded in stories. Several stories used characters familiar to the children; others used characters we invented. During the lesson each student, following recorded directions, responded orally or on a worksheet. In each classroom, two research aides administered a lesson, one proctoring, the other observing. The results presented here are based on classroom observations and student response data.

Lesson Structure and Content

The basic instructional unit in a lesson is the segment, a set of exercises (usually five) on a single topic. Five or six segments were used to construct each lesson. The segments dealt with seven different types of mathematical exercises: dictation, counting pictures, counting sounds, successors, memory, greater and less than, and story problems. Segment descriptions are shown in Table 2-1.

The dictation exercises asked the student to write one or more numbers read aloud. Counting-pictures exercises asked students to count the elements in an entire set or in a specified subset. As an example of the latter case, several houses were displayed, some of which had chimneys. Students were asked to count the houses with chimneys. The stimulus for successor exercises was oral ("What comes next? 1, 2, 3, 4, ...") or printed (1 2 3 4 __). Later exercises shortened the printed stimulus to 4 __ . Memory exercises were presented in the context of a story. A number was mentioned and after intervening dialogue the students were asked to write the number. The greater-or-less-than exercises asked the students to choose the largest of a set of numbers given orally or in writing. The order of presentation of segments in the lessons is shown in Table 2-2. For every exercise set, the students were given the answer to the first one or two exercises, usually by having the proctor write the answer on the chalkboard.

Student worksheets accompanied each lesson. Although there were variations from day to day, the worksheets

Table 2-1

Content of Lesson Segments

Segment identifier	Description: Task	Description: Limits	Number of exercises
	Dictation		
D1	One number	1 to 5	5
D2	One number	5 to 9	5
D3	One number	two digits	5
D4	Three numbers	1 to 9	5
	Counting pictures		
CP1	Count set	set < 5	5
CP2	Count subset	set < 7, subset < 5	5
CP3	Count subset	set < 14, subset < 10	5
	Counting sounds		
CS1	Mimic set of sounds	2 to 4	8
CS2	Count animal sounds	1 to 4	5
CS3	Count animal sounds	1 to 4	5
CS4	Count claps	1 to 4	5
CS5	Count dog barks	2 to 5	
	Successors		
S1	Next in oral sequence	3 to 7	5
S2	Next in oral sequence	4 to 8	5
S3	Next in written sequence	4 to 8	5
S4	Next written number	4 to 8	5
S5	"What comes after X"	4 to 8	5
S6	"What comes after X"	8 to 15	5
	Memory		
M1	One number	1 to 5	5
M2	One number	1 to 5	5
M3	Two numbers	2 to 8	5

(Table 2-1, cont.)

Segment identifier	Description: Task	Description: Limits	Number of exercises
	Greater and less than		
GL1	Two numbers	1 to 9	5
GL2	Two numbers	1 to 9	5
GL3	Three numbers	1 to 9	5
	Story problems		
SP1	Subtraction	Minuend < 5	5
SP2	Multiplication	Product = 12	1
SP3	Division	Dividend = 15	1

Table 2-2

Order of Segments in each Lesson

Lesson	Segments					
1	D1	S1	S2	M1	CP1	
2	M2	D2	CS1	SP1	S3	
3	D3	CP2	GL1	CS2	CS3	S4
4	D4	CS4	S5	GL2	M3	SP2
5	CP3	S6	CS5	GL3	SP3	

adhered to a basic format, illustrated in Figure 2-1 and Figure 2-2. Figure 2-1 shows the front of the worksheet, which has one column for each segment requiring written responses. Each column contains five answer blanks, labeled vertically A through E. A picture of a familiar object was drawn at the top of each column and the recorded voice referred to the picture when explaining to the children where to write their answers. Exercises that incorporated visual stimuli were printed on the back of the worksheet. A counting-pictures exercise is illustrated in Figure 2-2.

We were interested in finding out whether students could follow complex instructions, so in some lessons we asked them to respond to one set of exercises on the front of the worksheet, to another set on the back, and then to a later set again on the front. In each case the recording instructed them when to turn over the worksheet.

The time allowed for responding varied from one second, for some oral responses, to fifteen seconds, for some counting exercises. In general, we allotted six seconds for writing a single-digit number and eight seconds for writing a two-digit number. For counting exercises students were given $6 + n$ seconds to respond, where n is the number of objects to be counted.

The mathematical content of the lessons was at a beginning first-grade level. Thus, because lessons were given near the end of the school year, the material was easy for average first-grade students and difficult for average kindergarten students. We expected the lessons to be difficult for the kindergarten children; we used the kindergartners as experimental subjects because we thought American first-grade children might be more sophisticated than their Nicaraguan counterparts, and their performance would not give us a realistic view of the difficulties we might encounter. The kindergarten children did, indeed, experience difficulty with the mechanics of handling the worksheet. The students in one class were quite frustrated, and at the request of the teacher we dropped the class after three lessons. We were unable to analyze the worksheet data for kindergarten classes and therefore present only observational data for these classes.

Name _____

A _____	A _____	A _____
B _____	B _____	B _____
C _____	C _____	C _____
D _____	D _____	D _____
E _____	E _____	E _____

Figure 2-1. Student worksheet for California pilot lesson side 1 (reduced size).

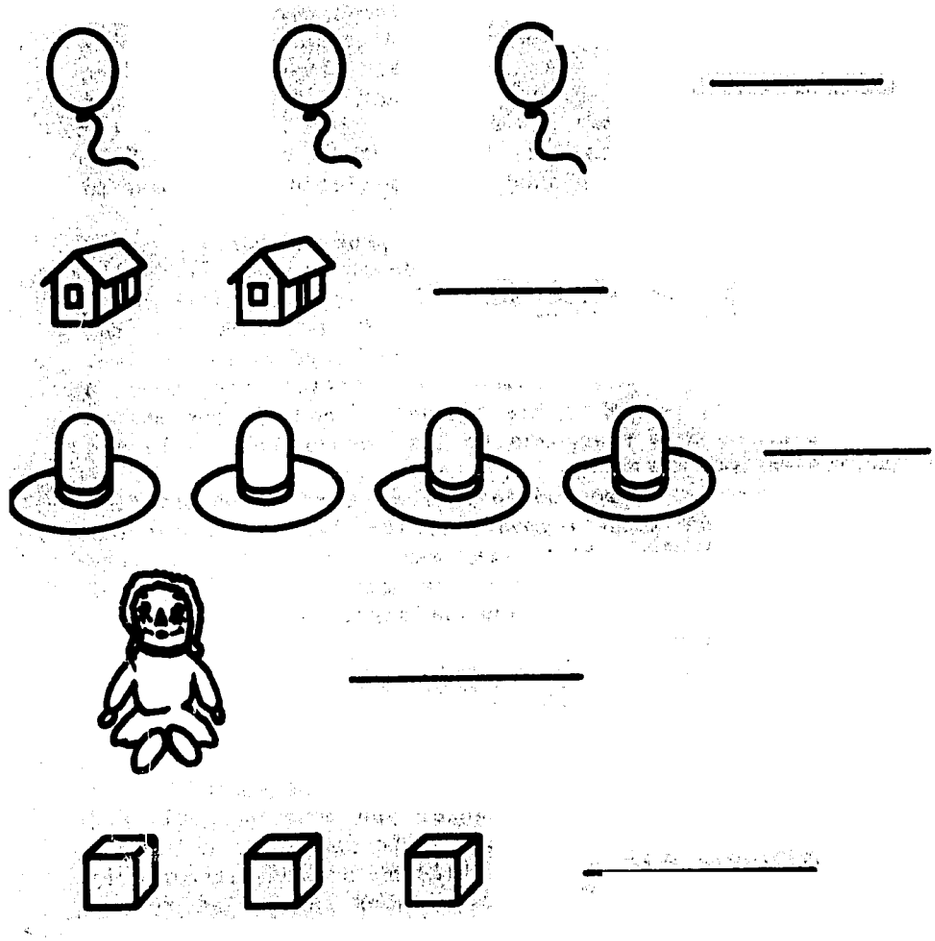

Figure 2-2. Student worksheet for California pilot lesson, side 2 (reduced size).

THE RADIO MATHEMATICS PROJECT

Lesson Administration

Two kindergarten and two first-grade classes participated in the study. The lessons were administered in May 1974. Both first-grade classes completed the lessons in one week. One kindergarten class received five lessons over a period of a week and a half; the other received three lessons in a week. Each lesson had two parts: a recorded portion, lasting 15 or 20 minutes, and a follow-up portion, during which children were asked to complete exercises on the worksheet.

During the first lesson the proctor worked sample exercises at the chalkboard. However, we found that the children did not watch him. The proctors themselves suggested that they walk around the room, observe the children, and help with individual problems as they arose. At the end of each lesson the proctor completed a questionnaire, recording his activities and his perception of the children's responses to the lesson as a whole and to its various parts.

The second lesson administrator used an observation matrix to rate each segment of the lesson on several measures including the attentiveness of students, the adequacy of time allowed for answering, the adequacy of instructions, and the appropriateness of students' response behavior.

Results

The study showed that we could use a segmented lesson structure and a student worksheet and that we could ask for many student responses during the course of a lesson. Kindergarten and first-grade children reacted differently to the lessons, and these differences identified for us aspects of lesson design that would require particular attention, especially the worksheet and instructions to the students.

Classroom Observations

The observations reported here are summaries from the observation matrices completed by observers during each

lesson. No formal rating scale was used; rather, the matrix format simply solicited from the observer a comment for each measure for each lesson segment. In reporting the results, we separate comments for kindergarten and first-grade classes where this seems appropriate.

Worksheet format--kindergarten. At the beginning of a lesson most children were able to find the proper answer blank. However, as a lesson progressed, many children wrote the answers to an exercise set in the wrong column of the worksheet. Once a child lost track of the progression of answer blanks on the worksheet, he wrote his answers in an increasingly haphazard order, ultimately using any empty space. When asked to turn the worksheet over, the kindergartners often had difficulty finding the proper answer blank on the reverse side. Dictation exercises caused the most confusion, possibly because students were frequently instructed to write more than one number in a single blank. Memory exercises and story problems also caused difficulty; in these exercise sets, items were interspersed throughout the dialogue rather than presented successively.

A few kindergarten children wrote successive answers horizontally, either all in one blank or one answer in each column. Some of the children who adhered to the vertical format of the answer sheet wrote two-digit responses vertically, for example writing 12 with the 1 above the 2.

Worksheet format--first grade. Except for a few cases, these children had no trouble coping with the vertical format of the worksheet or with turning the sheet over for another set of exercises. However, one observer noted that some children turned their worksheets over immediately after completing the first side, and so were confused when the radio subsequently instructed them to do this. The children did have some difficulty when asked to write more than one number in an answer blank as in the dictation exercises. Also, directions for moving from one completed column to the top of the next were not explicit enough, and some children had trouble finding the proper column.

Response time--kindergarten. Observers agreed that for every type of mathematical exercise, with the

exception of successor exercises, the response time allowed was too short for kindergarten children. In some cases, children were instructed to complete the last set of exercises after the tape had stopped and turn in their worksheets when they were finished. This caused much confusion because no time limit for completion was set and the procedure for termination was uncertain.

Response time--first grade. Observers agreed that an adequate amount of time (often more than needed) was allotted for children to respond. The counting sounds exercise set was the only one cited as progressing too quickly for the children to follow. The first graders showed the same confusion with the postbroadcast exercises as did the kindergartners.

Sample exercises--kindergarten. Sufficient sample exercises were provided for most exercise sets. The dictation, successors, greater-and-less-than, and story-problem exercise sets were occasionally cited as having too few examples. A problem arose with the follow-the-leader section of the counting-sounds exercise set because the directions did not state explicitly that the children were to mimic not only the sound, but also the number of times it was produced. Consequently, children often repeated one sound over and over, missing the next sound presented.

Sample exercises--first grade. Observers agreed that a sufficient number of sample exercises were presented to the children and that, in fact, any more would have been boring. However, presentation of sample exercises did not always ensure that students understood the directions. For the greater-and-less-than exercises some children wrote all the numbers presented rather than just the largest of the set. Many children did not understand the directions for the dictation and memory exercises of Lesson 5 which asked that they write more than one answer per answer blank. In these cases the proctor had to clarify the instructions.

Oral responding--kindergarten. Most children responded orally when asked to. In fact, the kindergarten children responded aloud when they were not supposed to during the presentation of every type of exercise, most noticeably during successors and memory exercises.

Perhaps they did this because the exercises were posed as questions, and the recording encouraged them to respond to questions.

Oral responding--first grade. First-grade children answered aloud when asked to. Occasionally one or two children spoke out of turn; usually they remained quiet when asked to do so. Several observers noted that when children spoke they were often counting to themselves as they attempted to answer an exercise.

Writing on worksheet--kindergarten and first grade. The children doodled, scribbled, and drew pictures on their worksheets continually during lesson administrations. They also traced over the letters and answer blanks. During the memory exercises some children wrote down numbers before being asked to do so.

Attentiveness--kindergarten and first grade. Observers noted that lessons that opened with long introductions or dialogue were the least successful in holding attention throughout. In general, children were restless during the presentation of exercise sets that required listening to dialogue, such as the memory exercises or story problems. However, they were attentive during mathematics exercises.

Observers agreed that the most enjoyable exercises were counting sounds and counting pictures, both of which were characterized by many opportunities to respond, and in the first case also by amusing animal sounds. Another general observation was that the children were tired and restless by the end of each lesson.

Analysis of Worksheet Data

The 25 lesson segments that required written responses were sorted into 18 cells on the basis of differences in either question or answer format. Table 2-3 shows the segments comprising each cell, the form of the stimulus (written or oral), and the number of items in the cell. Mean proportion correct for each cell is also shown. Comparisons between individual cells and groups of cells constituted the basis of the statistical analysis.

We studied the following variables as they affected student performance: linguistic format of the question,

Table 2-3

Cells for Data Analysis

Cell number	Segments	Form of stimulus	Number of items	Mean proportion correct
1	M1, M2	Oral	10	.935
2	M3	Oral	5	.482
3	D1, D2, D3	Oral	15	.993
4	D4	Oral	5	.855
5	SP1	Oral	5	.947
6	S1	Oral	1	.841
7	SP3	Oral	1	.114
8	GL1	Oral	5	.971
9	GL2	Oral	5	.955
10	GL3	Oral	5	.921
11	CS2, CS3, CS4, CS5	Oral	20	.847
12	S2	Oral	5	.945
13	S3	Written	5	.947
14	S4	Written	5	.846
15	S5	Oral	5	.968
16	S6	Oral	5	.860
17	CP1	Written	5	.970
18	CP2, CP3	Written	10	.975

complexity of the question, mode of sensory presentation (visual and auditory stimuli together as compared with an auditory stimulus alone), amount of supporting material presented with the exercise, numerical value of the answer required, number of answers required per problem, and type of reinforcement given.

The analysis is based on the proportions of each item answered correctly by the first-grade children. The analysis of variance assumes homogeneity of variance. Because the variance of a proportion is a function of the mean and hence not constant, we utilized a variance-stabilizing transformation (Anscombe, 1948):

$$p' = \arcsin \{\text{sqrt}\ [(r + 3/8)/(n + 3/4)]\}$$

where r is the number of students answering the item correctly, and n is total number of students. All tables present the untransformed value for proportion correct, but the statistical analyses, the t-test and the analysis of variance, used p'.

Items in three cells--Cells 8, 9, and 10--asked the children to find the largest of a set of numbers, phrasing the question differently for each exercise set. The language used was:

Cell 8	"Write the larger"	(two numbers)
Cell 9	"Which is more?"	(two numbers)
Cell 10	"Write the largest"	(three numbers).

A one-way analysis of variance was used to compare the effect of these phrasing differences. The value obtained for F was 3.078 ($df = 2,12$, $p < .1$); thus, the phrasing used in these greater-and-less-than items appears to have at least some affect on student performance.

To determine whether exercises with three numbers were more difficult than exercises with two numbers, Cell 10 was compared with Cells 8 and 9 using a one-sided t-test. In this comparison $t = 2.298$ ($df = 13$, $p < .025$), which indicates that it was significantly more difficult for the children to select the largest of three numbers than the larger of two numbers.

Counting exercises used two different stimulus types: oral (counting sounds, Cell 11) and visual (counting pictures, Cells 17 and 18). The value of t for this comparison was 4.772 ($df = 33$, $p < .005$). Performance on counting exercises with a visual stimulus was significantly better than that on similar exercises with an auditory stimulus.

Four of the cells (Cells 12-15) contained successor exercises. These cells differed from one another in two respects: the mode of exercise presentation (auditory stimulus versus combined visual and auditory stimuli) and the amount of input to the problem (a sequence of numbers versus a single number). The distribution of these characteristics among cells and the mean proportion correct are shown in Table 2-4. Table 2-5 shows the results of a 2 x 2 analysis of variance. The F value for the mode-of-presentation effect was 29.548, which is highly significant ($p < .001$). The F value for the effect of question type was 6.968 ($p < .025$). Hence, both main effects appear to affect performance significantly. The F value for the interaction of these two effects is 30.839 ($p < .001$), indicating that the main effects were not additive. The cell means (see Table 2-4) are the same for both presentation modes for exercises in which an entire number sequence was given. In contrast, the difference between cell means for the two modes of presentation was large when the exercises presented only one number.

We can suggest a possible explanation for this finding. The instructions for exercises in Cell 14 were given only once, at the beginning of the segment. If the children were not paying attention or did not understand the instructions, they would have trouble knowing how to answer a problem whose sole input was the visual stimulus 4 __. However, the oral counterpart of this question asked, "What comes after 4?" so that, in effect, the instructions were repeated for each exercise. This conclusion is supported by a comparison of response rates. All students responded to the entire orally presented segment (Cell 15), whereas 10 percent did not respond to the comparable question type with visual stimulus only (Cell 14).

Table 2-4

Mean of Proportion of Correct Responses for Successor Exercises

Mode of presentation	Question type	
	Sequence	Single number
Auditory only	.945 (Cell 12)	.968 (Cell 15)
Auditory and visual	.947 (Cell 13)	.846 (Cell 14)

Table 2-5

Analysis of Variance Table for Cells 12, 13, 14, and 15

Source	SS	df	MS	F
Mean	134.298	1	134.298	
Question type (sequence versus single number)	.054	1	.054	6.968
Mode of presentation (auditory vs. auditory and visual)	.229	1	.229	29.548
Interaction	.239	1	.239	30.839
Error	.124	16	.008	
Total	134.944	20	6.747	

Items in Cell 16 were identical in format to those in Cell 15 but differed in the magnitude of the answers required: The mean value of the answers to items in Cell 15 was 6.0, that for items in Cell 16 was 11.4. These two cells were compared using a one-sided t-test. The value of t obtained was 1.794 ($df = 8$, $p < .10$). While these results are not highly significant, we should point out that the variance of Cell 16 was largely due to one exercise, which required a response of 15, while the answers to the other exercises were all less than or equal to 12; the proportion correct was .512.

To examine the effects of particular numbers as answers independent of the question posed, the lessons were designed so that the "answer keys" for several segments were identical. In particular, there were five such sets of parallel segments, as shown in Table 2-6. Performance on most segments was too high for us to study the effects of individual answers. As shown in the table, performance decreased throughout some segments but not throughout others. Performance levels for the items in S4 are consistently lower than for the other segments. It appears that differences on parallel segments are influenced more by the type of question asked than by the particular value of the answer required.

Two types of exercises, memory and dictation, required the children to remember and write one or more numbers. Dictation exercises asked for an immediate response; memory exercises asked for a delayed response. The appropriate segments (Table 2-7) were compared using a 2 x 2 analysis of variance with unequal cell size, shown in Table 2-8. The F value indicating the effect of number of answers was 70.42 ($p < .001$) and for the main effect of segment type was 33.66 ($p < .001$). There was also a highly significant interaction effect, as indicated by an F value of 7.617 ($df = 1,31$, $p < .01$). Thus, as one might expect, the difficulty of the memory task is more sensitive to the interval before response when there are more numbers to remember.

In analyzing performance on the counting-pictures segments, we compared counting an entire set to counting a subset with a specified characteristic. We compared performance on Cells 17 and 18 using a one-sided t-test

Table 2-6

Parallel Segments

Set	Correct answer	Mean proportion correct by segment			
		S2	S3	S4	S5
1	5	.957	.933	.896	1.000
	7	.915	.956	.854	.977
	4	.957	.933	.833	.955
	8	.957	.956	.833	.955
	6	.936	.956	.813	.955
		CP1	CP2	CS4	
2	3	1.000	.958	1.000	
	2	.979	.979	1.000	
	4	.979	.979	.909	
	1	.915	1.000	.932	
	3	.979	1.000	.932	
		M1	M2		
3	4	.979	.978		
	2	.936	.889		
	3	.979	.956		
	1	.915	.889		
	5	.894	.933		
		D2	D3		
4	7	1.000	1.000		
	6	1.000	1.000		
	9	1.000	1.000		
	5	.978	1.000		
	8	.978	1.000		
		GL1	GL2		
5	7	.958	.977		
	8	.979	.932		
	4	.979	.977		
	6	.938	.909		
	9	1.000	.977		

Table 2-7

Proportion of Correct Responses in Memory and Dictation Exercises

Number of answers required per problem	Question type	
	Memory	Dictation
1	.935 (Cell 1)[a]	.993 (Cell 3)[b]
More than 1	.482 (Cell 2)[c]	.855 (Cell 4)[c]

[a] 10 items.

[b] 15 items.

[c] 5 items.

Table 2-8

Analysis of Variance Table for Cells 1, 2, 3, and 4

Source	SS	df	MS	F
Mean	227.446	1	227.446	
Segment type	2.285	1	2.285	33.667
Number of responses required per problem	4.780	1	4.780	70.428
Interaction	.517	1	.517	7.617
Error	2.104	31	.068	

and found $t = .325$ ($df = 13$). Thus, these children did not find counting the number of objects with a specified characteristic more difficult than counting the whole set.

Lessons were designed so that students received one of four types of reinforcement: correct answer presented immediately after the exercise, correct answer presented after a pause, correct answer presented for all items in a segment after the entire segment had been presented, or no presentation of results. The distribution of items among these four types of reinforcement is shown in Table 2-9, together with the proportion correct, P(C), the proportion of no response, P(NA), and the proportion of correct answers given that the child responded, P(C|A).

One might expect that children who were told the correct answers would make sure their papers showed that answer. However, the proportion of correct responses was not consistently 1.0 for items that were reinforced. For all but seven of these items, the proportion that gave no answer was 0. Thus, giving reinforcement apparently reduces the likelihood that students will leave the space blank. However, there does not appear to be a relationship between performance and type of reinforcement, nor between performance and position of an item within a segment (i.e., position A, B, C, D, or E).

Conclusion

This study produced many findings that were of help in developing radio lessons in Nicaragua. We found that the basic lesson structure we had designed worked well. Children did not seem confused by changes in topics and, for the most part, were able to keep pace with the frequent requests for responses.

We used identifiers at the head of the columns to help children find the correct answer blank on the worksheet. Nevertheless, many children were confused, and when the younger ones got lost they did not find their places again. Thus, the use of a single identifier was not adequate, and we clearly needed to develop a better identification system and to take more care in teaching children how to use the worksheet.

Table 2-9

Proportion Correct on Four Types of Reinforced Items

Segment	Item	P(C)	P(NA)	P(C|A)
After a pause				
D1	A	.957	.021	.978
D1	B	.979	.000	.979
D2	A	1.000	.000	1.000
D3	A	1.000	.000	1.000
D4	A	.955	.000	.955
M1	A	.979	.000	.979
M2	A	.978	.022	1.000
M2	B	.889	.022	.909
M2	C	.956	.000	.956
M2	D	.889	.022	.909
M2	E	.933	.022	.955
M3	A	.796	.000	.796
S2	A	.957	.000	.957
S2	D	.957	.000	.957
S5	A	1.000	.000	1.000
CS2	A	.938	.000	.938
CS2	B	.896	.000	.896
CS3	A	.854	.021	.872
GL1	A	.958	.000	.958
GL2	A	.977	.000	.977
CP1	A	1.000	.000	1.000
Immediately				
S3	A	.933	.000	.933
S6	A	.977	.000	.977
S6	B	.907	.000	.907
S6	C	.930	.000	.930
S6	D	.977	.000	.977
S6	E	.512	.023	.524
After a segment				
GL1	A	.958	.000	.958
GL1	B	.979	.000	.979
GL1	C	.979	.000	.979
GL1	D	.938	.000	.938
GL1	E	1.000	.000	1.000
None				
All other items				

There were several places in the lessons where the instructions were inadequate, where children did not understand what they were supposed to write. Also, asking children to write more than one answer on one blank was very confusing. It was clear that we needed to establish some conventions (e.g., one answer on a blank) and formulate instructions to the children more precisely.

In general the instructional portions of the lessons were more engaging than we had expected and the entertainment portions less so. The stories seemed particularly uninteresting to the children. We thought this was because the stories had been written without assistance from a professional writer (this work was done before a writer joined our staff). We assumed that the children in Nicaragua would enjoy the stories in professionally written scripts more. We were wrong; our later work substantiated the finding that children enjoy the mathematics portions of the lessons more than the stories. Thus, in this regard, as in others, we found the Nicaraguan children much like the American children, as we will discuss further in later chapters. However, because of the limited scope of this pilot testing work, and because of the incomparability of the students, we reinvestigated many of the same questions in the Nicaraguan setting.

THE RADIO MATHEMATICS PROJECT

CHAPTER 3

NICARAGUA PILOT RADIO LESSONS

The preliminary experimentation with radio lessons in California was followed by a similar effort in Nicaragua. The study addressed many of the same operational questions we had investigated earlier. In addition, classroom teachers were asked to participate both during and after the taped lessons. Two lessons were written and tested in three classrooms. They were then completely rewritten and four more lessons were produced to create the set of six pilot lessons described here. These lessons were given in six first-grade classrooms during November 1974, close to the end of the academic year.

The lessons were constructed using a variety of topics. One topic was new to the children and was presented in a sequence of lesson segments distributed among several lessons. The other topics covered material that we expected would be familiar to the children.

Several types of responses (oral, written, physical, manipulation of materials) were used to find out what the children were able to do, what types of instructions were needed, and how much time to allow for responses. We again experimented with reinforcement by providing answers to some questions after the students had responded.

Some portions of the lessons were designed to be handled entirely by the teachers in order to assess the effectiveness of our instructions to teachers. We also asked the teachers to provide motivation for the lessons (before presentation) and to assist during the broadcast by encouraging the children to respond orally and by displaying a sample worksheet.

We used stories with action and adventure, augmented by many sound effects, which we thought would capture the attention of the children. The same skeleton cast of professional actors was used throughout the six lessons and additional characters were brought in as needed.

THE RADIO MATHEMATICS PROJECT

Lesson Structure and Content

The six lessons contained 48 segments, of which 39 were presented during and 9 after the broadcast. Segments were chosen from five topics: numeration (NUM), applications (APL), geometry (GEO), basic concepts (BAS), and addition (ADD), as shown in Table 3-1. Basic concepts exercises were nonmathematical and taught students to use the worksheet. Numeration segments asked students to play a number game, count aloud, count sounds, write numbers from dictation, and give successors. Applications exercises covered measurement with a ruler, days of the week, and money, while geometry segments centered around comparing lengths of lines. Addition segments contained oral arithmetic exercises (exercises presented orally with no supporting visual stimulus). The content of each segment is indicated in Table A of Appendix A.

Response Mode

In each lesson approximately half the segments required written responses, except for the first lesson, which had only one such segment. The remaining segments required oral or physical responses. Oral responses included constructed responses to arithmetic exercises (What is 2 plus 3? What number comes after 17?), responses to mathematical questions phrased as choices (Which is longer, a broom or a pencil? Which is worth more, a 5-cent coin or a 10-cent coin?), responses to general-interest or organizational questions (Children, are you ready?), and recitation (rote counting, naming days of the week). Some written responses were constructed (Write the answer: How much is 5 + 2?), some were multiple choice (Circle the empty glass), and some were drawn (Draw a line longer than the one shown on the worksheet).

Most physical responses occurred during the "mando nando" game--mando means I command in Spanish--in which children followed the instructions of a leader (clap your hands, raise two fingers). In addition to worksheets and pencils, the only materials used were cardboard rulers provided by the project.

Table 3-1

Number of Pilot-lesson Segments by Topic and Lesson

Topic	Lesson 1	2	3	4	5	6	Total
Numeration	6	4	5	3	2	1	21
Applications	1	2	1	2	4	4	14
Geometry	1	0	0	1	2	0	4
Basic concepts	0	2	1	1	0	0	4
Addition	0	0	0	0	3	2	5
Total	8	8	8	8	9	7	48

Each lesson was accompanied by a student worksheet. The front of the worksheet for Lesson 4 is shown in Figure 3-1 and the reverse side in Figure 3-2, which together illustrate the worksheet format used for all the lessons. The format of the worksheet is similar to that of the California pilot lessons, but lines have been drawn between the columns. Most segments that required written responses contained five exercises.

Results

In general, the children responded actively and with apparent enjoyment and gave oral responses readily. They seemed to havé little difficulty with the mathematical material we presented but they were not always able to

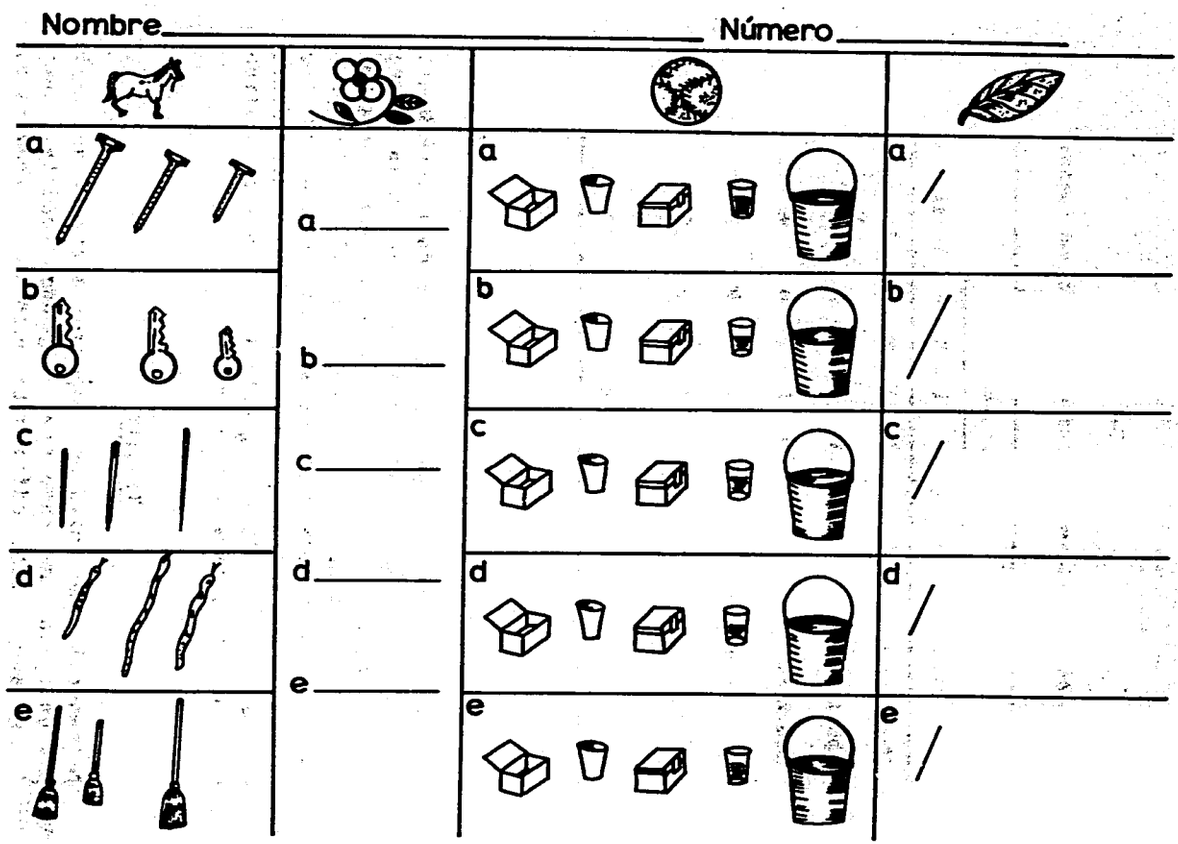

Figure 3-1. Student worksheet for Nicaragua pilot lesson, side 1 (reduced size).

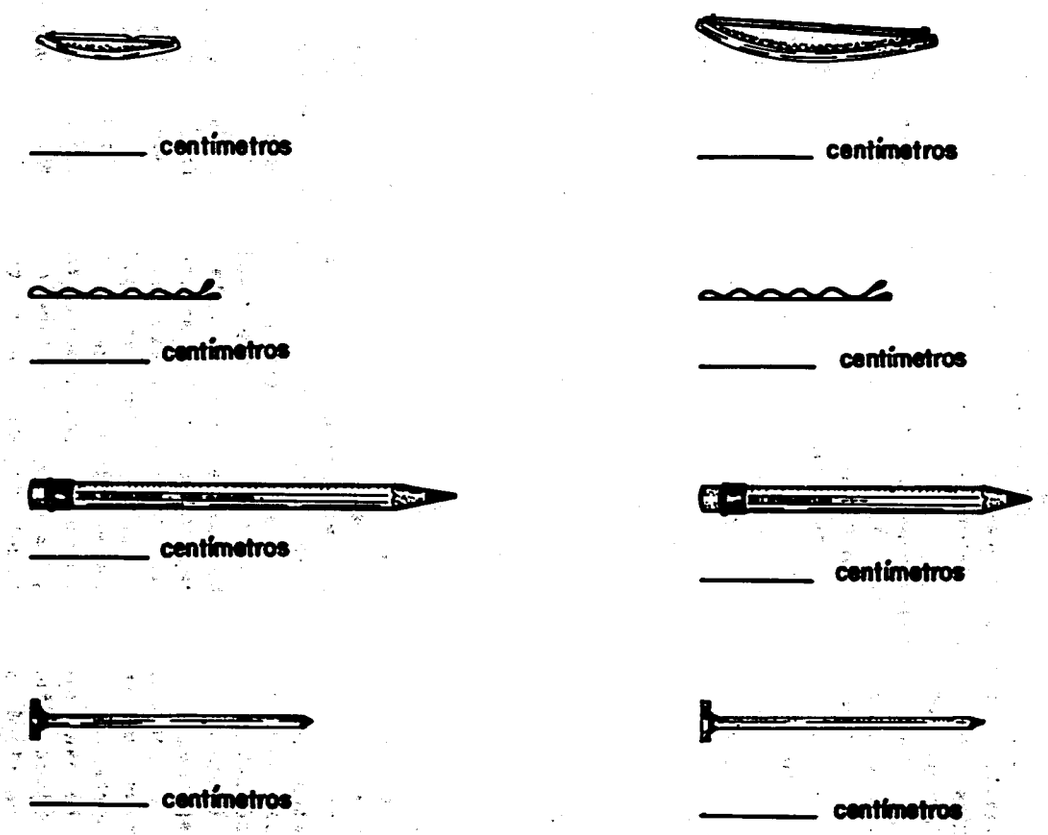

Figure 3-2. Student worksheet for Nicaragua pilot lesson, side 2 (reduced size).

find the appropriate place on the worksheet to write their answers.

We expected the children to be reticent and asked the teachers to encourage speaking aloud. We were apparently mistaken; the children did not need encouragement, and watching the teacher seemed to be distracting. The children spoke at every opportunity and, unexpectedly, answered rhetorical questions. Because we failed to leave time for these responses, parts of the program were drowned out.

From our experience in California we anticipated that the children would have difficulty in following oral instructions. We took care to write clear and explicit instructions and were more successful than with the California lessons. The children followed the instructions well, experiencing difficulty only when the instructions were ambiguous or the content too difficult. In an attempt to increase clarity we used frequent repetition, which we found rarely helped and often appeared to confuse the children. Occasionally an unexpected noise drowned out an essential word. This caused problems only when children were working individually on worksheets, suggesting that it would be useful to repeat key words or phrases in instructions for written work. In one lesson we used a "cartoon" voice to give exercises. Few students understood the voice.

In marked contrast to their attentiveness to instructions, the children were often restless and apparently uninterested during the presentation of stories. In this they were much like the California children. We talked with some of the Nicaraguan children after the lessons, and their responses indicated that they did not follow the plots. Although the stories were certainly better written and more exciting (by adult standards) than the ones we used in California, they were apparently too complicated for the children to follow.

The children had more difficulty using the worksheets than we had anticipated. Several different types of worksheet exercises are illustrated in Figure 3-1. For the exercises in column 1, the instructions mentioned the object displayed, and each rectangle in the column contained a different object. When the students were

asked to circle the largest nail, they were able to find the correct place for answering without using either the identifier at the top of the column (the horse) or the identifier in the rectangle (the "a"). The exercises in column 3 were designed to test how well students could follow the progression within a column. Thus, each display was the same, but the instructions differed. The children were asked to locate the letter "a" and in that rectangle circle the pail. They were then instructed to find the "b" and in that rectangle circle the glass with water, and so on, down the column. Some children circled more than one object in a single row, suggesting that they did not always move to the next rectangle.

We used letter identifiers on the worksheet because the lessons were designed for students nearing the end of first grade. We were aware that lessons for beginning first graders would need another type of identifier. It was also clear from the pilot test results that, although these worksheets were better than those we used in California, we needed a still better scheme for telling students where on the worksheet to mark their answers.

We experimented with the amount of time allowed for various types of responses, and found the following times to be adequate.

Oral response to a question that does not require mental calculation	2 sec.
Counting one to five bottle tops	5 sec.
Circling one choice among two or three pictures	5 sec.
Writing a one-digit number	8 sec.
Drawing one to three circles	12 sec.

In several segments we tried to supply reinforcement by announcing the correct answer after the children were given time to write a response. We told the children to cross out an answer they wanted to change and write the correct answer beside it. Some children seemed to prefer

erasing their answers, using a wet finger if necessary. Others did not understand the procedure at all.

Teachers seemed to be receptive to the program. Some teachers, who apparently thought the children would have difficulty listening to and obeying recorded instructions, repeated many of the questions, thereby shortening the time allowed for the children to respond. We had encouraged teachers to play an active role during the taped lesson but, after some experience, we concluded that this was unnecessary and sometimes disadvantageous.

For the first version of the first two lessons we wrote lengthy and detailed teacher's guides, describing the purpose of the lesson, the mathematical content, and the postbroadcast activities. The teachers found these confusing and a much briefer guide format was used for the six pilot lessons. The short guide described only the postbroadcast activities and the materials the teacher needed to provide for the lesson. We considered including a lesson script in the guide, but decided against it since teachers preferred shorter guides and did not need to know the content of the recorded lesson prior to hearing it with the children.

Performance Data

Completed worksheets were collected for all lessons, and the response data were analyzed. During the lessons we made no attempt to inhibit cooperative answering, or 'copying', or other forms of help, either from the teacher or from students. The performance scores were inflated because of copying, but there still remained considerable variation in scores.

The number of students taking each lesson ranged from 155 to 186. The mean percentage correct for segments requiring written responses is shown in Table 3-2. (The identifier L1-4 is for Lesson 1, Segment 4). The performance level fell below 70 percent correct for only two segments (L2-7 and L5-9), suggesting that the exercises were not difficult for the children (although the contamination by copying makes it impossible to regard scores as accurate measures of difficulty).

Table 3-2

Performance on Pilot Lesson Segments

Lesson and segment	Topic	n	Mean percentage correct	Standard deviation
L1-4	NUM	169	88.8	3.2
L2-4	BAS	174	78.0	25.3
L2-5	NUM	174	80.1	3.2
L2-7	BAS	174	66.9	4.5
L2-8 P[a]	APL	174	71.0	4.5
L3-4	BAS	186	71.5	10.0
L3-6	NUM	186	73.2	3.2
L3-7	GEO	186	88.0	8.4
L3-8 P	APL	186	78.3	5.5
L4-2	GEO	173	94.5	4.5
L4-4	NUM	173	70.1	8.4
L4-5	BAS	173	83.9	4.5
L4-6	GEO	173	83.7	.0
L4-7 P	APL	173	88.3	5.5
L5-4	APL	155	85.5	5.5
L5-7	ADD	155	78.8	8.4
L5-8 P	APL	155	80.6	7.7
L5-9 P	APL	155	49.1	4.5
L6-3	ADD	174	83.8	3.2
L6-4	APL	174	76.9	16.4
L6-6	APL	174	83.5	7.7
L6-7 P	APL	174	91.4	.0

[a] "P" means presented after the taped lesson (postbroadcast)

Evidence of learning appears when we examine scores for three segments, not previously taught, that present the same task. Exercises in Segments L2-8, L3-8, and L4-7 asked students to measure pictures of objects (which varied in length from 3 to 10 centimeters). As seen in Table 3-2, the percentage correct increased from 71.0 to 88.3.

Although the overall performance level was quite high, there was substantial variation for lessons and classes. Table 3-3 presents the mean percentage correct for each lesson for the six classes. Class 4 performed well consistently, while Class 2 performed poorly for the entire set of lessons. Other classes showed occasional high or low scores. This variability is not unexpected but presents problems when trying to establish the appropriate level of difficulty for lessons and exercises.

Conclusion

Preparation of the pilot lessons gave the staff an opportunity to work out many of the procedures that would be necessary for producing lessons on a tight schedule. The results led us to the following general conclusions about the design and use of radio lessons.

1. Children are most attentive to radio lessons when they are responding actively.
2. Actively responding to mathematical exercises is more engaging for first-grade children than passively listening to stories.
3. Rhetorical questions are answered by the children; such questions should be used only sparingly and time must be allowed for responses.
4. Children listen to instructions and, in most cases, repetition is not needed.
5. Children can learn new topics from the radio lessons.

Table 3-3

Mean Performance on Pilot Lessons by Class

	Percentage correct per lesson						
Class	1	2	3	4	5	6	Mean
1	89.2	80.0	73.2	92.7	60.9	88.7	80.8
2	78.0	68.8	61.4	65.1	58.0	62.3	65.6
3	83.3	80.7	89.9	91.3	81.1	88.4	85.8
4	100.0	85.2	90.7	92.0	85.2	94.6	91.3
5	92.0	54.4	79.8	89.8	70.3	86.0	78.7
6	87.6	73.9	74.8	79.1	75.0	79.3	78.3
Mean	88.4	73.3	78.3	85.0	71.8	85.6	80.1

THE RADIO MATHEMATICS PROJECT

CHAPTER 4

NICARAGUA FIRST-GRADE ACHIEVEMENT TEST

An important initial step in the design of curriculum material for the first grade was collecting information about performance levels of students in the traditional mathematics program. We needed to know both what teachers were supposed to be teaching (as specified in the curriculum guide) and what students were actually learning (as observed in responses to test items). We were also interested in the range of performance differences between classes and between rural and urban schools.

In order to use a test to assess the degree to which curricular objectives are being met, the items comprising the test must be a representative sample of the item domain, the set of all possible items that can be derived from the objectives. The achievement test administered in 1974 was designed in this way.

We used a multiple matrix-sampling design, in which each item is given to a subset of the students and each student takes a subset of the items. With this design we obtained responses to a large number of items and thus got more information than we would have obtained from a design in which each student answers each item.

The initial step in constructing the test was to define the test domain, the groups of exercises to be tested. Over 500 types of exercises were identified. The test content was determined by sampling from among these exercise types and assigning them to test forms. The final result, described below, was a test that provided information about the degree to which curricular objectives were being met in traditional classrooms in Nicaragua. A pilot test was developed and given to approximately 90 students in two classrooms. After modification, the test was administered to students in 44 classrooms. The remainder of this chapter describes the development of the test and the results obtained.

Definition of the Test Domain

In constructing the test domain, the mathematics curriculum was divided into strands, and each strand was further divided into equivalence classes, that is, sets of items that have structural features in common. Each equivalence class is defined explicitly in terms of item characteristics such as the arithmetic operation, the exercise format (for presentation and for response), the size of the numbers, and so on. The equivalence class structure partitions the domain into mutually exclusive and exhausting sets of exercise types. Because the structural features chosen to characterize exercises are related to level of difficulty, each equivalence class is relatively homogeneous with respect to difficulty level, and the classes within a strand span the range from easy to hard. (Suppes, Searle & Lorton (1976) discuss the use of equivalence classes for describing curriculum.)

Two sources of information about the first-grade mathematics curriculum were used to choose the strands and the equivalence classes: the curriculum guide prepared by the Ministry of Education (a summary of which appears in Figure 4-1), and our observations of the topics teachers were presenting in the classroom. We found some teachers presenting exercises from the second-grade curriculum--for example, addition exercises with carrying, and addition and subtraction of fractions. Because we wanted to investigate the full range of achievement of first-grade children in traditional classrooms, we extended the test domain beyond the topics specified by the Ministry guides for first grade to such second-grade topics as those mentioned above.

The strands in the test domain are listed in Table 4-1. Numeration topics include counting to 100, reading and writing integers and simple fractions, place value, size comparisons for both integers and fractions, and the use of ordinal numbers up to 'tenth'. As mentioned above, the addition and subtraction strands were extended to include problems with carrying and borrowing and addition and subtraction of fractions. As shown in Figure 4-1, the Ministry considers multiplication and division to be first-grade topics.

NICARAGUA FIRST-GRADE ACHIEVEMENT TEST

First Unit: Basic Concepts (2 weeks)

size, height, position, width, quantity, weight

Second Unit: Sets (4 weeks)

set, element, comparing sets, equality, inequality

Third Unit: Systems of Counting (8 weeks)

counting up to 99, ordinals, place value

Fourth Unit: Addition and Subtraction (4 weeks)

addition and subtraction as inverse operations, sums, differences to 18, addition and subtraction of 2-digit numbers without carrying or borrowing

Fifth Unit: Multiplication and Division (3 weeks)

readiness work, multiplication combinations up to 27, division with dividends up to 15, divisors of 2 to 5

Sixth Unit: Common Fractions (2 weeks)

halves, thirds, and fourths

Seventh Unit: Money (2 weeks)

monetary unit--el cordoba, 5, 10, 25, 50 centavo coins, equivalencies

Eighth Unit: Measures (5 weeks)

length, volume, time, weight, pairs and dozens

Ninth Unit: Geometry

point, line, plane, curved and straight lines, angles, figures with 3, 4, more sides

Figure 4-1. Nicaraguan first grade curriculum: condensed version of outline prepared by the Ministry of Public Education.

Table 4-1

Distribution of Equivalence Classes Among Strands in Test Domain and Test

Strand	Number of classes		
	Test domain	Proposed pilot test	Actual pilot test
Numeration	218	35	21
Addition	113	19	17
Subtraction	71	16	16
Multiplication	45	10	9
Division	11	5	5
Geometry	26	5	2
Applications	70	20	10
Total	554	110	80

Geometry includes 'readiness' topics such as the concepts of shape, similarity, position, and length. The applications strand covers money, linear measure, pairs and dozens, time, and word problems. The item domain consisted of 554 equivalence classes distributed among strands as shown in Table 4-1.

NICARAGUA FIRST-GRADE ACHIEVEMENT TEST

Structure of the Test

The pilot test and the final test had the same structure except for number of items. Both tests had three parts, none of them overlapping. Part A was prepared in one form and was given in all classrooms. Part B was prepared in five forms and all students in a classroom received the same B form. Part C was prepared in five forms, and these were assigned randomly to students within each class, so that in each classroom roughly equal numbers of students worked on each C part. Each student received a single test booklet, which included the appropriate combinations of all three parts.

Test items were of two types. For some items, part or all of the content of the exercise was presented orally. For others, only the instructions were presented orally, the exercise itself was printed. For the first type of item, all students in a classroom must receive the same item. Thus, such items could not be included in Part C of the test. For items of the second type the test administrator read instructions that could apply to exercises with different content, for example, Circle the greatest number, where each student has a printed list of several numerals that need not be the same from one student to the next. These items could appear on all parts of the test. Because some items were unsuitable for use in Part C, it was not possible to assign items randomly to test parts.

In the pilot test, each form of each part contained 10 items. Thus, there were 10 Part-A items, 50 Part-B items, and 50 Part-C items--a total of 110 items. To obtain these items it was necessary to sample 110 equivalence classes from the test domain. These classes were distributed among strands as shown in Table 4-1 in the column labeled "Proposed Pilot Test." The proportion of classes for each strand roughly corresponded to that of the test domain as a whole.

Results of the Pilot Test

Pilot testing was conducted in October 1974. A trial run of the entire test as described here would have

required five classrooms, one for each B form of the test. However, time did not permit such extensive testing, and only two classrooms were tested. Thus, eight forms--Part A, two forms of Part B, and all five forms of Part C--were tested. The 10 different test booklets used contained 80 items, distributed among strands as shown in the column labeled "Actual Pilot Test" of Table 4-1. Each test booklet contained 30 items, 10 from each part. Table 4-2 shows the number of students who took each of the eight forms and the resulting mean scores. Data for individual items are presented in Table B of Appendix A.

Table 4-2

Performance on Eight Subtests of Pilot Test

Part	Form	n	Mean score[a]
A	1	91	5.8
B	1	41	4.4
B	2	50	6.1
C	1	17	2.3
C	2	18	2.0
C	3	18	2.1
C	4	20	2.3
C	5	18	2.6

[a] Maximum score = 10.

Table 4-3

Distribution of Item Scores for Pilot Test

Percentage correct	Frequency	Percentage correct	Frequency
0	6	45.1 - 50	5
1 - 5	3	50.1 - 55	3
5.1 - 10	7	55.1 - 60	3
10.1 - 15	6	60.1 - 65	3
15.1 - 20	5	65.1 - 70	3
20.1 - 25	11	70.1 - 75	1
25.1 - 30	5	75.1 - 80	2
30.1 - 35	2	80.1 - 85	1
35.1 - 40	5	85.1 - 90	2
40.1 - 45	4	90.1 - 95	3

As shown in Table 4-3, item scores ranged from 0 to 94.5 percent correct, with a mean of 34.6 percent correct and a standard deviation of 26.4. The median score was 27.8 percent correct. Table 4-4 presents the mean percentage correct and the range of scores for items from each strand. Results are shown separately for integers and fractions because error rates for these are markedly different. The scores suggest that few curricular goals were being met satisfactorily in these two classrooms. To give the reader a sense of the performance levels observed, Table 4-5 displays all of the items in

Table 4-4

Proportion Correct on Pilot Test by Strand

Strand	Number of items	Mean percent correct	Range of percentages
Numeration			
Integers	19	55.2	5.6 - 94.5
Fractions	2	37.6	17.1 - 58.0
Total	21	53.6	5.6 - 94.5
Addition			
Integers	13	42.6	5.6 - 70.0
Fractions	4	2.8	0 - 5.6
Total	17	33.2	0 - 70.0
Subtraction			
Integers	12	27.0	5.0 - 52.7
Fractions	4	4.2	0 - 11.8
Total	16	21.3	0 - 52.7
Multiplication	9	21.4	5.6 - 38.9
Division	5	10.8	0 - 22.0
Geometry	2	68.2	44.4 - 92.0
Applications	10	36.0	5.0 - 84.0

Table 4-5

Pilot Test Items Ordered by Difficulty from Addition of Integers Strand

Item	Percentage correct
2 + 1 = ___	70.0
3 + 2 = ___	66.7
24 21 + 41	58.2
6 + 10 = ___	55.5
5 + 9 = ___	54.9
2 0 + 3	50.0
160 + 530	50.0
"How much is 13 plus 4?"	43.9
20 + 7 = ___	35.3
0 + 4	23.5
38 + 55	22.2
60 + 60 = ___	16.7
64 + 8	5.6

equivalence classes from the addition strand (using integers), with the associated percentage correct. The item shown in quotation marks was given orally.

Administration of the pilot test revealed several shortcomings in the testing procedures. There was much cooperative answering, especially where students sat at tables or long desks. Some test questions were worded in such a way that students answered orally instead of in writing. Administration of the pilot test took about an hour, much longer than we expected.

On the basis of the pilot testing experience, the guide for administering the test was revised to include special instructions about rearranging seating patterns to decrease cooperative answering, and the length of the test was shortened from 30 to 21 items by reducing to 7 the number of items from each part. As shown in Table 4-6 the topics of addition of fractions, subtraction of fractions, and division were entirely eliminated from the test domain. Small changes made in the distribution of items are shown in the table. The total number of equivalence classes sampled in the final test was 77. The test items are shown in Appendix B.

Selection of the Classrooms to Be Tested

A list was made of all first-grade classrooms, stratified by region (urban, municipal, rural). A classroom was considered eligible for selection if there were 15 or more first-grade children matriculated. From each stratum 10 classes were chosen. The classroom selection was random, with the restriction that, for urban and rural schools, once a classroom was chosen, all further classes from that school were eliminated from the eligible lists. The restriction was not applied to the municipal stratum, which had only 8 schools.

In addition to the 30 randomly chosen classes, 14 were tested for special reasons. Six classes had already taken some experimental radio lessons, and we were interested in how these classes handled the test. The 18 teachers who were scheduled to use radio lessons in 1975 had already been chosen, and we wanted data on how their

Table 4-6

Comparison of Content of Pilot and Final Achievement Tests

Strand	Number of items	
	Pilot test	Final test
Numeration		
Integers	19	24
Fractions	2	5
Total	21	29
Addition		
Integers	13	11
Fractions	4	0
Total	17	11
Subtraction		
Integers	12	12
Fractions	4	0
Total	16	12
Multiplication	9	4
Division	5	0
Geometry	2	5
Applications	10	16
Total	80	77

students performed. Five of the 18 teachers taught classes that had been selected in the random assignment, and five more taught classes that had already used radio lessons. The classes of the remaining eight teachers in the 1975 schedule were also tested, bringing the total of classes that were not randomly selected to 14--these eight and the six radio classes. In all, 1,241 students were tested.

Each of the 10 teachers selected at random was notified of the test in advance by a letter from the School Inspector of the Department of Nasaya to the school director. The remaining 14 teachers were told about the test by staff members, who were in contact with them regarding other aspects of the Project. All teachers were assured that the test would be used not to evaluate them or their students but to guide curriculum development and evaluate the Project activities.

Test Administration

Tests were administered by two staff members. One read the instructions while the other taped the testing session and acted as a monitor. While the children were being tested the teacher was asked to fill out a short form for each child, giving background information including age, sex, and years in school.

The test took 30 minutes to administer (including a short break). About 45 minutes before and 10 minutes after the testing period were spent on administrative matters. Examiners reported many of the usual problems encountered when testing first-grade students--a tendency to answer aloud, confusion about following directions, and so on. These problems seemed unusually severe because of the novelty of the test situation for these students. They had never experienced any of the following: people from outside coming in to give them a test, printed tests, the exercise-presentation formats used in the test, handing out of pencils, orally presented mathematics exercises (requiring written response), a test with a variety of mathematical operations presented, and tape recording of classroom activities. Although children had

difficulties with the test situation, it is important to note that for 4 of the 77 exercises the percentage correct was over 90. Thus, for at least some exercises, almost all of the children were able to respond correctly.

The examiners noted that the six classes that had just taken the experimental radio lessons seemed to find the test situation less confusing. The format for the test was quite similar to that used for worksheets during the lessons, and the examiners felt that the radio lessons had provided some training in the skills needed to respond successfully during the test.

Test Results

Data for individual items are presented in Table C of Appendix A. The mean number correct for each part of the test is shown in Table 4-7 (the data are for 1,341 students from 44 classes). The various parts of the test were not designed to be of equal difficulty, and therefore scores on different parts cannot be expected to be comparable.

Test administrators noted that, when they had the opportunity to do so, the children often copied answers from one another. The structure of the test allowed us to obtain evidence about the extent of cooperative answering. Each test booklet was organized so that questions 1, 2, 6, 13, 14, 17, and 18 were from Part A; questions 3, 4, 7, 8, 11, 12, and 21 were from Part B; and questions 5, 9, 10, 15, 16, 19, and 20 were from Part C. The examiner led the children through the first 15 questions on the test, so that all children worked on the same question at the same time. For example, for Question 5 (Part C), children were told: Read the numbers carefully. Write the numbers that are missing. The child had printed in his test booklet one of five exercises, depending on which C form he had.

A child who copied an answer from his neighbor ran the risk of copying a correct (or incorrect) answer for an exercise different from the one printed in his test booklet. It seems reasonable to conclude that a child copied from a nearby paper when his response is the correct answer to the corresponding exercise from a

Table 4-7

Performance on Eleven Subtests of Final Test

Part	Form	n	Mean score[a]	Standard deviation
A	1	1241	4.51	1.98
B	1	246	4.07	1.53
B	2	265	4.60	1.54
B	3	223	4.45	1.50
B	4	240	3.95	1.86
B	5	267	3.70	1.93
C	1	248	2.79	2.15
C	2	255	2.37	1.86
C	3	243	1.92	1.58
C	4	246	3.15	2.14
C	5	249	2.09	1.87

[a] Maximum score = 7.

different form. The complexity of the questions supports this conclusion. For Question 5 the number of children who apparently copied is shown in Table 4-8. The numbers along the diagonal show the number of students who gave the correct answer to the exercise they were given.

Table 4-8

Number of Students Involved in Cooperative Answering on Question 5[a]

Form student answered	Form for which student's response was the correct answer				
	1	2	3	4	5
1	104	4	3	3	5
2	9	47	2	1	7
3	4	1	40	7	1
4	4	4	2	122	6
5	9	5	0	3	52

Note. About 250 children took each test form.

[a] Question 5: "Read the numbers carefully. Write the numbers that are missing."

Form 1: 30 40 50 __ __ Form 4: 72 73 74 __ __

Form 2: 2 4 6 __ __ Form 5: 8 7 6 __ __

Form 3: 5 10 15 __ __

he numbers off the diagonal show the number who gave the orrect answer for an exercise on a different form. For uestion 5, 80 children (approximately 9 percent of the umber who responded incorrectly) gave the correct answer o an exercise from a different form.

Performance on test items summarized by strand is shown in Table 4-9. The percentage correct for the five geometry readiness items ranges from 73.0 to 98.9. (Two of these items are shown in Table 4-10.) The high scores for these items indicate that students were able to understand directions and respond correctly when they knew the answer.

Table 4-9

Proportion Correct on Final Test by Strand

Strand	Number of items	Mean percent correct	Standard deviation
Numeration			
Integers	24	56.6	23.1
Fractions	5	58.6	20.8
Total	29	57.0	22.4
Addition	11	45.4	15.0
Subtraction	12	32.4	13.9
Multiplication	4	33.3	9.2
Geometry	5	89.4	11.1
Applications	16	40.2	21.2

The range of performance for all strands is shown in Table 4-10. The performance level was quite low for addition and subtraction items; no more than two-thirds of the students responded correctly to the easiest items. Approximately 44 percent of the students responded correctly to the easiest multiplication exercise.

Table 4-10

Items with Highest and Lowest Percent Correct on Final Achievement Test by Strand

	Highest		Lowest	
Strand	Percent correct	Item	Percent correct	Item
Numeration	91.46	"Write the number 7."	16.46	"Write the numbers that are missing." 72 73 74 ___ ___
Addition	67.71	"How much is 5 plus 1?"	11.76	38 + 55
Subtraction	60.00	"How much is 6 minus 3?"	7.62	42 - 5
Multiplication	43.62	2 x 5 = ___	25.00	9 x 10 = ___
Geometry	98.87	"Circle the longest ladder." (3 choices)	73.03	"Circle the glass that is on the right."
Applications	71.30	"Manuel had 4 buttons to play with. Playing with another boy he lost 3. Write the number of buttons he has left."	2.88	"Write the hour the clock says." (10:30)

Items from the applications strand included word problems presented in both oral and written forms. The oral exercises required a free-format response; the written exercises were in multiple-choice format. Word problems (customarily presented in written form) are considered very difficult for young children. We have long suspected, however, that children would find such problems easier if they were presented orally. (For some positive experimental results on the reasoning abilities of young children when problems are given orally, see Suppes, 1965.) The results shown in Table 4-11 support this supposition. The percentage correct ranged from 49.6 to 71.3 for five word problems presented orally. (Note that 71.3 percent is higher than the performance on any of the computation items--see Table 4-10.) On the other hand, performance on written word problems ranged from 5.4 to 40.2 percent correct. Since these exercises were presented with three answer choices, the expected percentage correct by chance is 33.3; thus, for four of the five problems, performance is close to the chance level.

Examination of Student Errors

An examination of the types of errors made by students on the achievement test provides information that can contribute to the design of radio lessons. It is important to identify those aspects of the curriculum that children are not mastering and to take particular care in teaching them by radio. We found that students had more difficulty with conceptual, as compared to computational, aspects of the curriculum.

Students often added the numbers presented in an exercise, instead of subtracting or multiplying as appropriate. The frequency of these errors is shown for nine subtraction exercises in Table 4-12 and for four multiplication exercises in Table 4-13. For the exercise 5 - 3, 27 percent of the errors were of this type, and for the exercise 5 x 1 (written vertically) the response 6 was almost as frequent as the correct response 5. These results suggest that many students have failed

Table 4-11

Performance on Word Problems

Required arithmetic	Percent correct
Oral, free response	
3 + 2 = ___	65.9
3 + 2 + 2 = ___	70.2
4 - 3 = ___	71.3
2 x 4 = ___	49.6
6/2 = ___	52.4
Written, multiple choice	
5 - 3 = ___	31.1
6 + 1 = ___	36.1
5 + ___ = 6	5.4
4 + 2 = ___	40.2
3 + 3 = ___	35.7

Note.

	Mean	Standard deviation
Oral	61.9	10.2
Written	29.7	14.0

Table 4-12

Frequency of Use of Wrong Arithmetic Operation: Addition Instead of Subtraction

Item	Number of students		
	Taking item	Subtracting correctly	Adding (correctly)
Oral			
6 - 3 = ___	265	159	9
28 - 2 = ___	240	104	9
Written			
5 - 3 = ___	1,241	618	169
6 - 3 = ___	239	60	30
13 - 8 = ___	255	72	10
72 - 1 = ___	246	78	19
10 - 7	249	54	30
90 - 10	245	63	27
84 - 21	243	87	29

Table 4-13

Frequency of Use of Wrong Arithmetic Operation: Addition Instead of Multiplication

Written item	Number of students		
	Taking item	Multiplying correctly	Adding (correctly)
2 x 5 = ___	243	106	35
5 x 1	249	96	72
9 x 10 = ___	248	62	23
32 x 3	267	70	25

to master the conceptual task of identifying the correct operation. The prevalent practice in the Masaya classrooms of limiting instruction to one arithmetic operation at a time probably contributes to the students' difficulty.

Students seem to have less difficulty identifying the operation when exercises are presented orally. One exercise, 6 - 3, was presented both orally and in written form. The percentage correct for oral presentation was 60, compared with 25 for written presentation, and the use of the wrong operation was three times as frequent for the latter. The frequency of using the wrong operation was also very low for word problems presented orally. For the subtraction exercise 4 - 3 in story context, 159 of 223 responses were correct and only two students answered 7. For the multiplication exercise 2 x 4 in story context, 119 of 240 responses were correct, and one student responded with 6.

The most frequent error for operations with zero was to respond with the number zero. For the exercise 3 + 0, of 246 children, 103 answered 3, 34 answered 0. Similarly, for 6 - 0, 88 of 248 children answered correctly, 43 responded with 0. For these exercises there were, respectively, 25 and 24 different incorrect answers but, except for the response already noted (0), all occurred with a frequency of less than five percent. The number of students not answering was 54 for the first exercise and 44 for the second exercise.

When writing two-digit numerals, first-grade children in the United States often reverse the digits. The same is true of our sample of Nicaraguan first graders. When asked to write 15, 83 percent of the children responded correctly; writing 51 for 15 accounted for 10 of the 38 errors. Similarly, writing 35 for 53 accounted for 11 of 89 errors.

Students performed poorly on the task Write the number that comes before X. For three exercises in which X was a two-digit number, percentage correct ranged from 28 to 41. From 15 to 23 percent of the students gave the successor rather than the predecessor of the number. In contrast, 79 percent of the students correctly gave the successor to 29, and only 1 percent responded incorrectly with the predecessor.

Comparison of Students from Different Regions

An important aspect of our testing program was to compare the performance of students from urban, municipal, and rural schools. For this purpose we obtained for each student an estimated score for the 77 items of the entire test. The method used was adapted from that of Kleinke (1972), and a full description appears in Appendix C. In brief, the estimated score is obtained by adding together the scores for a student on the parts of the test he took, the mean scores (for all students) on the parts of the test that he did not take, and an adjustment for the student based on the difference between his own scores and the mean scores on the parts of the test he took. The maximum possible estimated score is 77, the total number

of exercises tested. The mean estimated score for all (1,241) students was 37.1; mean scores for classes ranged from 23.5 to 47.2. Scores for all classes are presented in Table D, Appendix A.

Means and standard deviations of estimated scores for different student groups are shown in Table 4-14. There was a difference in test scores for classes in different localities and, as one might expect, the mean score for urban students was highest, that for rural students lowest. Statistical tests, however, showed these differences to be nonsignificant, which was somewhat surprising in view of the strongly held popular opinion that rural children, especially in developing countries, are educationally disadvantaged.

Table 4-14

Summary Statistics Using Total Scores Estimated by Kleinke Procedure

Student group	n	Mean	Standard deviation
44 classes	1,241	37.10	12.76
6 radio classes	157	40.13	12.34
10 urban classes	301	37.24	12.47
10 municipal classes	310	36.42	13.00
10 rural classes	263	34.24	12.70
Total 30 classes	874	36.05	12.77

We noted that there was a difference in age between urban and rural students, with rural students being on the average .3 year older (8.5 vs. 8.2). Since older students have an advantage, it may be that this effect partly cancels out the (assumed) disadvantage of a rural environment. That is, it may be that there is a true and significant difference between children of the same ages in rural and urban environments.

An alternate hypothesis that we were unable to test is that a smaller proportion of school-age children are in school in rural areas and that the school population contains a higher proportion of more able children than is true of the urban areas. Of course, the possibility remains that in the Nicaragua setting, the characteristic differences between rural and urban students are smaller in size than in other locations. This remains an important issue for further investigation.

We mentioned earlier the observation of test administrators that children who had participated in the pilot test of the radio lessons seemed to have less difficulty with the test. As seen in Table 4-14, these classes attained the highest mean test score. This may reflect their nonrandom selection or may result from the test-taking practice afforded by the radio lessons.

Conclusion

The results of the administration of the mathematics achievement test suggest the following general conclusions about first-grade students in the Department of Masaya in Nicaragua.

1. Most children, even though unfamiliar with the testing situation, are able to respond to test exercises.
2. Test results are contaminated by cooperative answering.
3. Children perform well on items that test general knowledge.
4. Children perform poorly on most items that are characteristic of the formal mathematics curriculum.

5. The conceptual aspects of the curriculum cause the children more difficulty than the computational aspects.
6. Exercises presented orally are easier for children than comparable exercises presented in writing.
7. Children perform better on arithmetic items presented as word problems than on those presented formally.
8. There is little difference in performance between children from urban, municipal, and rural schools.

THE RADIO MATHEMATICS PROJECT

CHAPTER 5

CURRICULUM STRUCTURE

Curriculum structure is the foundation upon which an instructional program is built. In constructing a program, the lesson developer must specify the topics to be presented and the competencies students are expected to gain. However, a listing of topics or competencies is not a sufficient base on which to organize an instructional program. It is necessary to analyze further the structure of the subject matter to expose the underlying dependencies and interrelationships and to build, from these, appropriate strategies for instruction.

Curriculum development projects differ quite substantially in the degree to which structure is made explicit and is incorporated into lesson design. The Radio Mathematics Project has, from the outset, been committed to the careful articulation of structure, and the Project's progress in this direction during the first experimental year is documented in this chapter. After a brief discussion of the source of the curriculum content, we turn to an examination of the basic curriculum structure adopted by the Project and then describe how that curriculum organization was translated into instructional material. The chapter concludes with discussion of a model of design for radio lessons that synthesizes the work of this first experimental year.

Curriculum Content

Project lessons are based on the mathematics curriculum specified by the Nicaraguan Ministry of Education. A thorough revision of the primary mathematics curriculum was completed in 1973 under the direction of Mrs. Vitalia Vrooman, the Nicaraguan director of the project. An abbreviated version of the revised first-grade curriculum outline was presented in Chapter 4 as Figure 4-1. The list of topics is that of a typical 'modern mathematics' program. Except for the inclusion of

formal work on multiplication and division, it closely resembles outlines prepared in the United States. It is also very similar to outlines we have examined from other developing countries, which illustrates the uniform character of primary-school mathematics curriculums throughout the world.

There are several reasons for adopting the Nicaraguan curriculum as the basis for project lessons. First, the curriculum is fully satisfactory as a basis for the radio lessons. Second, the Ministry has expended much effort in the last several years in revising the curriculum and retraining teachers. We felt that teachers would be less resistant to a change in the presentation mode of lessons if there were not a simultaneous change in the curriculum. Finally, using the same curriculum in both experimental and control classes simplified evaluation of the radio lessons.

Some changes in emphasis and some reorganization of the Nicaraguan curriculum proved necessary in structuring the radio lessons. As shown in Figure 4-1, each topic in the Nicaraguan curriculum is allotted a specific period for instruction. Teachers customarily follow these guidelines and present all instruction on a topic in a single block of time. Because of the demonstrated superiority of distributed practice we chose not to follow this procedure, but instead to distribute instruction on each topic throughout the school year. We further chose to decrease the emphasis on formal instruction about sets; we used set concepts only as aids in teaching other topics, for example, algorithms for addition and subtraction.

Strands Structure

A strand structure that assigns each major topic to a strand is the basis on which the Project's first-grade curriculum is organized. In previous work, the Institute has used this structure for organizing curriculum for computer-assisted instructional programs in mathematics (Suppes et. al, 1976) and reading (Atkinson, 1968; Fletcher & Atkinson, 1972), and this form of organization

is widely used for elementary-school curriculum in the United States. In the Nicaraguan work, six basic strands were defined: basic concepts (BAS), numeration (NUM), addition (ADD), subtraction (SUB), applications (APL), and measurement (MEA).

For each strand a set of curriculum objectives was formulated that defined the expected performance of a student who was considered to have successfully completed the first-grade instructional program. The curriculum objectives are presented in Appendix D.

Two types of objectives for the strands were identified, minimal and advanced. These labels do not reflect an assessment of the importance of an objective. Rather, they are an estimate of the performance levels expected at the end of the first grade: higher (75 to 85 percent correct) for the minimal objectives and lower (50 to 75 percent correct) for the advanced. The mathematics curriculum, of course, builds cumulatively, and advanced objectives for first grade may become minimal objectives for second grade.

The objectives defined for each strand specify a terminal performance level and are not suitable for directly specifying curriculum content. For this purpose a further subdivision of content is required. An exercise class, the appropriate unit of structure, is a set of exercises that is homogeneous with regard to the salient instructional purpose and can be defined in terms of structural features of the exercises. In Chapter 4 we described the use of equivalence classes of exercises to construct a test. Equivalence classes differ from exercise classes described here only in that the former partition the curriculum into disjoint sets of exercises--an exercise appears in only one equivalence class. In contrast, exercise classes may overlap. Frequently, a new class is defined by extending the limits of a class so that similar exercises using larger numbers are included. (This point is illustrated by the NUM classes described in a subsequent section.)

The set of nested exercise classes defined for a curriculum objective reflect the teaching strategy that has been adopted for the attainment of that objective. Often, classes are defined for a task that is not a

component of the terminal objective but represents an intermediate step in acquiring the skill specified by the objective.

We have thus far identified three levels of curriculum structure: the strand, the objective, and the exercise class. One further level is required for the construction of lessons--the lesson segment. A lesson segment contains a small set of exemplars of the exercise type defined by the exercise class, exactly the set that will be included in one lesson. Consider, for example, the exercise class: All sums from 0 to 4, presented orally. A lesson segment obtained from this class might include the exercises two plus one, one plus three, and one plus zero. This distinction between exercise classes and lesson segments is further illustrated in the discussion of lesson construction that follows.

Instructional Content of Lessons

During the year, we used two methods for assigning lesson segments to lessons. The first method yielded to the second at Lesson 116. (The second method, in turn, yielded to a further modification for the work in 1976.)

First Scheme

In the first scheme, subject matter was allotted to lessons in two stages. First, for each strand, instructional material was organized into groups of related objectives. For each of the subtopics formed this way, a list was made of the appropriate items of instructional content. The 150 lessons comprising the instructional year were divided into 10 blocks of 15 lessons each, and each item of content was allotted a position in the year by assigning it to one of the 10 blocks.

In doing this, the curriculum developer kept in mind the relationships between different topics and different strands, and juggled assignments so that prerequisites were satisfied. The procedure did not use exercise classes, but larger aggregates of material.

CURRICULUM STRUCTURE

The second stage in allotting subject matter to lessons occurred after this initial assignment. The aggregates were divided into exercise classes, which were then assigned to specific lessons within a block of 15 lessons.

A specific example will clarify this process--we shall use the numeration strand. The objectives for numeration were aggregated into 11 major subtopics: counting by rote, reading and writing numerals, successors, counting, greater and less, completing sequences, predecessors, place value, fractions, ordinals, and number words. Table 5-1 displays the range of instruction for each of these subtopics for two blocks of lessons, 1 to 15 and 76 to 90 (the absence of an entry in the table indicates that the subject was not taught during that block of lessons.)

Within each block of 15 lessons, teaching material was broken down more finely into exercise classes. For the block formed by Lessons 1 to 15, the following four classes were defined for counting-by-rote exercises:

NUM 1:	Rote counting from 1 to 5
NUM 8:	Rote counting from 1 to 10
NUM 17:	Rote counting from 1 to 13
NUM 26:	Rote counting from 1 to 15.

Note that each class extends the counting task to larger numbers, always beginning at 1. The exercise classes were then used to construct lesson segments. Almost all classes were used to construct more than one lesson segment. NUM 1 appeared four times, in Lessons 1, 3, 4, and 5; NUM 8 appeared seven times, twice in Lessons 6 and 8 and once in Lessons 7, 9, and 10; NUM 17 appeared three times, in Lessons 11, 12, and 13; and, in this first block of 15 lessons we are considering, NUM 26 appeared in Lessons 14 and 15.

The exercise classes defined for a single objective have a natural hierarchical relationship; the relationship between classes defined for different objectives and different strands must be made explicit in the curriculum design. In this first effort at lesson construction we had no systematic method for codifying these

Table 5-1

Teaching Topics from the Numeration Strand for Lessons 1 to 15 and 76 to 90

	Lesson content	
Subtopic	1 to 15	76 to 90
Rote counting	1-15	by 2's
Reading and writing numerals	read 1-7 write 1-5	50-100
Successors	1-8, oral	1-48, written
Counting	1-7, oral 1-4, multiple choice	1-50, written by 10's, written grouping in 10's
Greater and less		0-49
Completing sequences		by 1's to 50 by 10's to 100
Predecessors		2-9
Place value		10, 20, ... ,90
Fractions		2/3, 3/4, 2/4
Ordinals		
Number words		

interrelationships, and they were accommodated in an informal way during the assignment of exercise classes to blocks of lessons. After approximately two-thirds of the year had elapsed we refined our methods to incorporate these relationships explicitly.

Second Scheme

In the second scheme, a single plan was made for all of the material that remained to be covered in Lessons 116 to 150. For each major topic, all of the remaining exercise classes were defined and a graph was drawn representing the partial ordering implied by the prerequisite relationships between classes. Most of these graphs are too large to be shown effectively here; we use the graph for fractions as an illustration (Figure 5-1). The graph has been drawn to show lesson-segment descriptions rather than exercise classes, so that it reflects curriculum decisions about the number of repetitions needed for each class. The exercise classes referred to on the graph are described in Table 5-2.

The graph incorporates information about several variables that have not yet been mentioned. The graph differentiates between written and oral responses by using rectangles for the former and circles for the latter. Segments appropriate for teacher presentation are labeled M (for maestro), and those appropriate as transition segments (started by radio, finished by teacher) are labeled R/M; the unlabeled ones are to be presented by radio. We found that a pictorial representation of the type illustrated in Figure 5-1 greatly aided the allocation of segments to lessons by making explicit the prerequisite relationships between exercise classes.

The 1975 First-grade Curriculum

For the mathematics lessons produced in 1975, the curriculum consisted of six strands encompassing 40 objectives. To reach these objectives, 563 exercise classes were defined, which in turn were used to construct 1,314 lesson segments. In addition to segments used to

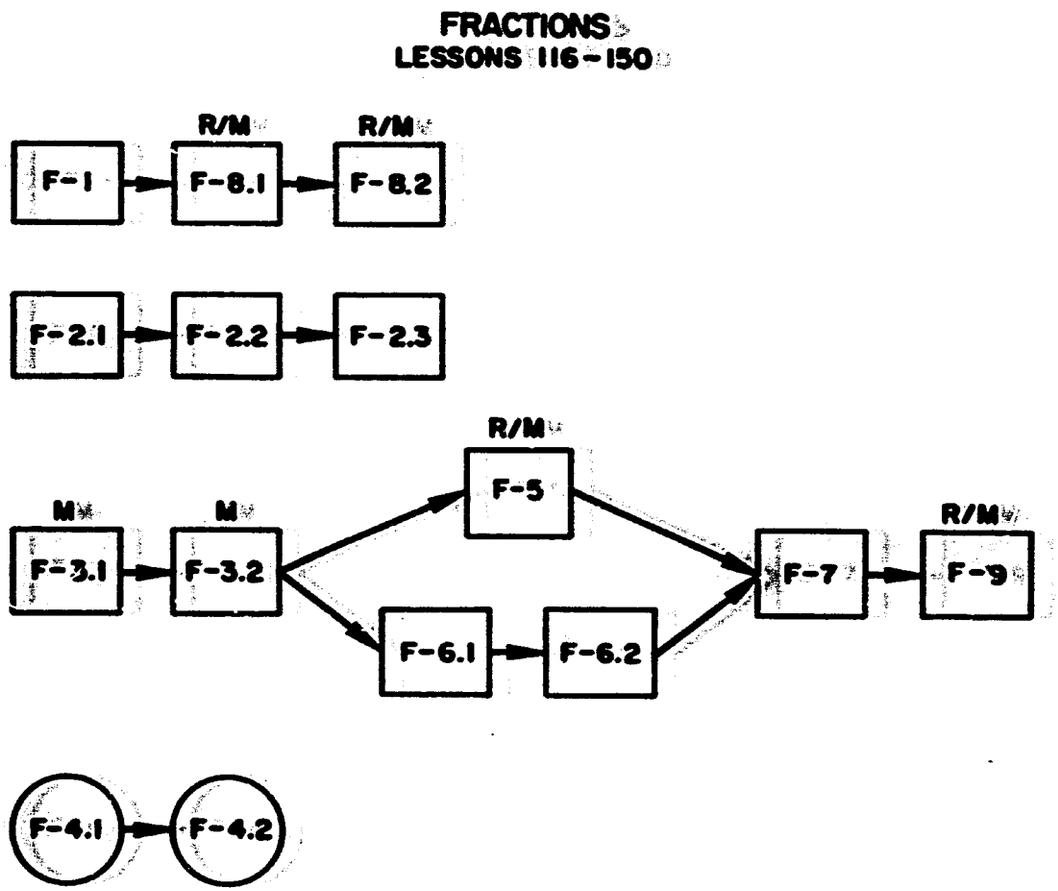

Figure 5-1. Graph of partial ordering for fractions classes.

Table 5-2

Exercise Classes for Fractions Strand, Lessons 116 to 150

Class identifier	Description	Number of segments
F-1	Coloring part of figure, 1/2, 1/3, 1/4, 2/3, 3/4	1
F-2	Selecting figure divided into specified parts, 1/2, 1/3, 1/4	3
F-3	Copying numerals, 1/2, 1/3, 1/4, 2/3, 2/4, 3/4	2
F-4	Word problems, comparison of sizes	2
F-5	Selecting fraction that represents shaded part of figure	1
F-6	Writing fractions to dictation	2
F-7	Writing fraction that represents shaded part of figure	1
F-8	Coloring part of figure, 1/2, 1/3, 1/4, 2/3, 3/4	2
F-9	Writing fraction that represents shaded part of figure	1

teach material, the lessons contained test segments. Called embedded tests, these segments were designed to measure the progress of students through the curriculum. Test items were selected in a systematic way to sample

performance on previously taught items, and a test segment was presented every fifth lesson.

The allocation of lesson segments among strands, in blocks of 15 lessons, is shown in Table 5-3. For bookkeeping purposes, test segments were collected into a strand called TST. Basic-concepts segments were used almost exclusively in the first block of lessons to help teach the children how to use the worksheet. Approximately half of the segments were from the NUM strand, reflecting the importance of this topic in first grade. Another 10 percent of the curriculum was devoted to applications; this topic was stressed throughout the year.

The number of segments per lesson rose steadily during the year, averaging 7 in the earliest lessons and more than 10 at the end of the year. The increase was the result of several factors, which are discussed more fully in later chapters. Briefly, the most important are these: Program length was increased by several minutes, the children became more competent, and more instructional time was available when the entertainment portions of the lessons were curtailed.

A lesson outline for each of the 150 lessons is shown in Appendix E. The segment descriptions presented there will give the interested reader information about the pace at which each topic was developed, the allocation of time among subtopics, and the prerequisite relationships that we assumed to exist between classes of exercises.

In this first year of development, all initial curriculum decisions were based on the experience and intuition of the Project staff, and revision decisions were based on relatively informal methods of obtaining information about the suitability of the lessons under development. It is a major aim of the Project for the second year's work to increase the precision and sophistication of the data-collection procedures and the methods for making curriculum decisions.

Table 5-3

Distribution of First-grade Lesson Segments Among Strands

Lesson block	Number of segments							
	BAS	NUM	APL	ADD	SUB	MEA	TST	Total
1-15	19	84	5	2				110
16-30		86	6	21			2	115
31-45	2	72	17	26			3	120
46-60		78	21	30	6		3	138
61-75		78	3	27	20		3	131
76-90		66	12	15	35		3	131
91-105		69	15	26	16	2	3	131
106-120		49	11	46	26	4	2	138
121-135		26	7	69	51	6		159
136-150		51	32	42	35			160
Total	21	659	129	304	189	12	19	1,333

Model for Curriculum Design and Revision

To further conceptualize curriculum development and revision we adopted the following model. This model views lesson development as based on a group of factors treated at increasing levels of specificity, each of which can be

parameterized. The initial curriculum design entails choosing the initial values for the parameters; the revision task is to choose which parameter values should be changed and then to obtain new values. The model has four levels:

1. Curriculum structure,
2. Lesson format,
3. Segment content,
4. Single exercise.

In the first level--curriculum structure--the most important parameters (some of which have already been discussed in this chapter) are:

(a) the set of strands defined (scope of topics included),
(b) the set of objectives formulated for each strand,
(c) the exercise classes defined for each objective,
(d) the prerequisite relationships between exercise classes,
(e) the time to begin teaching each objective,
(f) the amount of review work required for each objective in order to maintain adequate performance levels,
(g) the amount of teaching time required for each objective, and
(h) the importance of each objective in relation to the total program.

The curriculum outline displayed in Appendix E and the curriculum objectives presented in Appendix D provide values for each of these parameters, either explicitly or implicitly. In order to use performance data to revise curriculum, each of the parameter values must be made explicit.

We have already discussed several of these parameters--the selection of strands (based on the Ministry of Education curriculum), the definition of curriculum objectives and exercise classes, and the

prerequisite relationships between classes. We have not yet discussed quantifying the amount of teaching and review or assessing the importance of objectives.

Either elapsed time or the number of exercises devoted to a topic can be used as a measure of teaching and review. In our preliminary work with this model, we have used the number of exercises or, as in Table 5-3, the number of segments to measure the portion of the curriculum alloted to an objective.

The issue of the importance of an objective is complex, and adopting a measure of importance requires choosing between competing assumptions and ambiguities. Nevertheless, because assumptions about importance guide all curriculum development, it is valuable to attempt to quantify these judgments. First we must ask, important for what? Are we interested in terminal performance, or is the objective in question important because it serves as a prerequisite for later instruction. And what should be the implications of assigning value or weight to an objective? How should the importance of an objective relate to the amount of time spent teaching it, and how do importance and difficulty interact in assignments of time to teaching and review? In the year about which we are reporting we had only begun to consider these issues.

In 1976, the Project staff began work on a quantitative method for deciding how to allocate review exercises to different topics throughout the instructional year. The model incorporates measures of importance, difficulty, and teaching time, and assigns exercises to objectives so as to maximize the predicted score on a year-end test of the curriculum objectives. Although this work is still in its early stages, it has already challenged some of the assumptions we, and other, curriculum developers customarily make about the changes in skill level that take place during teaching. We anticipate reporting on this work in detail in our next volume.

We turn now to the second level of our model, <u>lesson format</u>. Some of the parameters that describe the format of a single lesson are:

(a) the total number of segments in a lesson,

(b) the allocation of these segments to the radio and postbroadcast portions of the lesson,
(c) the variety of topics and response types assigned within a lesson,
(d) the length of individual segments, and
(e) the ordering of segments within a lesson.

Because of time and money constraints it is not possible for us to perform systematic experimental investigations of the effect of variations in these parameters. A typical experiment might be to test, for a given body of content and for a specified period of time, whether children learn more by being presented eight short segments a day or four long ones. The number of such questions that could be investigated is overwhelming and, if past experimentation is a useful guide, we would not often find large differences. Furthermore, without further research we would not know to what extent a performance difference would generalize to other content. We have chosen not to undertake investigations of this sort. Our stance, with regard to lesson format, has been to develop guidelines for acceptable ranges of parameter values and to rely most heavily on observations of the children's behavior, rather than on measures of performance, for making changes in parameter values. For example, the decision to place those segments that require the use of concrete materials at the beginning of the radio lesson and those that require the use of the worksheet at the end of the lesson was made in this way.

A few parameters describe the third level of the model, <u>segment content</u>. These include the number of exercises, the similarity between exercises (the same type or mixed), and the level of detail of the directions and instructions given.

Finally, at the fourth level--<u>exercises</u>--the parameters of interest are the time allowed for response, the type of reinforcement given, and the amount of information presented visually and orally.

CURRICULUM STRUCTURE

Conclusion

During the first year the Project staff collected both performance and observation data to guide the development and the revision of curriculum. Although we have presented a model with four levels, we have concentrated our most systematic efforts at the top level, that of curriculum structure. We think that decisions regarding what topics are to be taught, how they are to be taught, and how the available instructional time is to be allocated between teaching new topics and maintaining those already taught are likely to have the greatest impact on how much children learn. There is a serious lack of systematic methods for making such decisions--for any type of instruction. We decided that investigation of such questions regarding radio instruction should take priority over the systematic investigation of other aspects of the model.

THE RADIO MATHEMATICS PROJECT

CHAPTER 6

INSTRUCTIONAL METHODS AND PRINCIPLES

The form taken by an instructional program reflects both the underlying curriculum structure and the instructional methods adopted. This chapter discusses instructional methodology and the application of psychological principles of instruction to lesson design. In the course of the discussion, we review some of the research literature that bears on the design of effective instruction and consider how these results can be implemented in a program that uses radio as the medium for delivering instruction.

Our work in this area is highly sensitive to the information we gain from classroom observations and the collection of performance data. During 1975, experimental classrooms were observed daily, and, at the end of each lesson, student worksheets were collected and the responses analyzed. Near the end of the year a program of weekly tests was initiated, providing a further source of performance data. In this chapter we report informally some of the results of this work as documentation for the changes in instructional procedures that occurred during the year.

Instructional Methodology

The teaching methodology of the Project is based on what we consider to be sound pedagogy as well as on the particular constraints of presentation by radio. The method might be described as that of learning by example. Development of a concept or an algorithm proceeds through a sequence of exercises and directed activities. The exercises and activities serve as examples leading to a generalization. This approach to teaching is not new. It goes back at least to the work of the nineteenth-century British mathematician, Augustus de Morgan, who was very much concerned with different methods of teaching. He was especially critical of the formal methods of verbal definition prominent in his century (de Morgan, 1830).

An illustration of learning by example is the introductory work on addition. The concept of addition and an algorithm for determining a sum are developed by exercises that require physical activities and concrete representation. For example, in the particular exercise $\underline{3} + \underline{2}$, the children are instructed to hold up three fingers on one hand and two fingers on the other hand, and then to count the number of fingers held up in all. In other exercises, they might be asked to draw three balls on one line, then to draw two balls on another line, and, again, to tell how many balls there are altogether.

The important methodological point here is that words are used only for the relevant essentials; the mathematical rationalization for addition is implicit in the procedure. The process itself is a concrete instance of the counting algorithm for addition. Therefore a verbal explanation of the working rule is not needed, either prior to application of the algorithm or as a subsequent rationalization. Similarly, technical terms are not required to explain that the mathematical justification is the union of two sets. The separation of the two hands and the separation of the two sets of balls ensures that the essential idea of joining the two sets and counting all the objects is clear. The physical activity displays the concept and provides the algorithm.

From such specific examples, limited to small numbers, the procedure itself is generalized, and the next step is the application of this generalized process to larger numbers. The test of understanding, then, is not the ability to express the process verbally but the ability to apply the generalization to other numbers.

At the same time, through multiple examples, practice, and reinforcement, the children begin to associate a single number (the sum) with an expression such as "cuatro mas dos" (four plus two) that represents the pair of numbers to be added. This builds a mental association, in this case between a number pair and its sum.

Thus the initial experiences, which concretely develop the concept and algorithmic process of addition, lead to two interrelated outcomes--the generalized process applicable to <u>any</u> two numbers and the mental association

of a number as the sum of a pair of numbers. The emphasis on mental arithmetic recognizes the need eventually to attain rapid mental facility in computation, but the process for determining a sum by joining two sets and counting is established firmly by the many exercises requiring this procedure. A facility with computation and an understanding of the underlying concepts are twin goals of our teaching method. (These goals are obviously interdependent and many exercises combine both aspects.) Children are asked to first decide their answer mentally, then "think of" the particular sum, and finally use the algorithmic process (with objects or drawings) to verify their answers. Review and maintenance of all steps and skills are systematically incorporated throughout the program.

We should make clear that we perceive the understanding of principles and the learning of algorithms to be different, even if related in complex ways. An algorithm is a mechanical procedure that can be followed by someone who does not understand what he is doing. It should be taught directly. Other topics that contribute to understanding why the algorithm works will aid in the retention--even in the initial acquisition--of the skill but cannot be expected to substitute for direct teaching of the algorithm itself. (Some of the subtle problems in characterizing what we mean by understanding, especially in the case of learning mathematical concepts, are discussed in Suppes, 1965.) On rare occasions bright children, after learning the appropriate principles, can develop their own algorithms for some process. This is exciting when it happens but ordinarily leads to inefficient or incomplete algorithms and cannot be counted on as a method for teaching skills.

There are special factors associated with the use of radio for instruction that strongly influence the selection of method. With the use of radio there is a danger of providing wordy explanations. We avoid this by using physical activities, such as working with materials or drawing pictures, to support the development of concepts. Since the first step in learning from Project lessons is to follow directions, this skill must be carefully developed. Furthermore, the directions

presented by the radio must be clear, unambiguous, and at a level of complexity appropriate to the audience. We have put much effort into writing good directions and this work is reported in Chapter 7.

Instructional Principles

Aural Learning

Studies on the effectiveness of instruction that uses the aural mode, rather than the visual, are of clear relevance to the issue of teaching by radio. Unfortunately, such studies are relatively sparse in the research literature. McGoech and Irion (1952) summarized several studies that compared rates of learning by auditory and visual modalities and concluded that "auditory presentation is often more effective than visual for relatively young children and that it tends to become less effective as the age of the subject increases" (p. 482). Budoft and Quinlan (1964) used a paired-associate task and found that word pairs presented aurally to second-grade children were learned more quickly than those presented visually. Perelle (1975) experimented with a learning task in a typical classroom setting, using second-grade students, and found the same superiority of the auditory presentation mode. These studies support the proposition that young children can learn about as well aurally as visually.

Oral Group Responses

Project radio lessons ask for two types of student responses, oral and written. In the context of radio lessons, oral responses are group responses, in contrast to written responses, which are individual. We have found in the psychological literature no research studies that examine the effect of oral group responses on learning in young children. Our own observations increasingly persuade us that group responding is an effective instructional tool and one that is enjoyed by the children.

We use oral group responses in at least two ways. When new material is introduced, we ask the children to respond aloud, expecting that those who know the answer will cue the others. Observations in the classroom verify that this does happen. We also use oral responses for practicing exercises the children are expected to memorize, thus providing fast-paced drill that is independent of the children's writing skills. Our experience suggests that the potentialities of oral group responding as a learning experience have been overlooked in the research literature and that the area deserves further study.

Response Rate

Instruction has been shown to be more effective when children respond actively. This principle has received substantial support in the research literature (see Suppes & Ginsberg, 1962, for example) and is widely implemented in modern instructional programs.

Project lessons are designed to elicit a high level of activity from the students. Two quantities serve as guidelines: Each radio lesson should require at least 50 responses, and no more than 60 seconds should elapse without a student response.

Although we began the year committed to a high level of student activity, we moved cautiously at first. We were concerned that lessons paced too fast would frustrate and confuse the children. We increased the pace only when classroom observations indicated that the children were following easily. Our initial caution proved excessive; the children were able to cope with, in fact seemed to enjoy, a much faster pace than we had anticipated. After the initial trial period, lessons were designed to require an average of two to three responses per minute.

Maintenance of Attention

Maintaining the children's attention is, of course, a prerequisite of effective radio lessons. Our initial plan was to use stories to engage the children and embed mathematical work in the stories in order to maintain

interest. The pilot tests of lessons designed in this way, described in Chapters 2 and 3, convinced us that the mathematical activities are intrinsically interesting to the children and do not need story support, so long as the children are asked to respond frequently. Thus, our view of the role and importance of stories has changed markedly.

For approximately the last third of the school year we redesigned the lessons to eliminate stories from the entertainment portions. Instead we used short interludes of songs, games, jokes, poems, and physical activities to provide a change of pace from mathematical activities. One result was to increase the time spent on mathematics without decreasing student interest in the programs, an obvious advantage. Our current view is that stories are useful for presenting mathematical material in a realistic setting but, at least for young children in the classroom, are not needed for maintaining the interest level.

Reinforcement

Telling children the correct answer has been shown to facilitate learning in many settings (Stolurow, 1961). Similar results have been obtained for adults in highly controlled experimental situations by Bower (1962) and others. We have experimented with various methods of reinforcement. In the pilot tests conducted in California, we found that few children changed their written answers, or even appeared to listen, when the radio lesson provided the correct answer several seconds after an exercise was presented. Although first-grade children seemed to be familiar with the procedure for checking a group of written answers, this is not a useful procedure to use with oral exercises, since the children do not remember the exercise itself.

In almost all studies of reinforcement that use young children and instructional materials, stimulus presentation is visual and the stimulus remains in view while the reinforcement is presented. (In this context, reinforcement refers to presentation of the correct answer, not to affective support.) There are fewer studies of the use of reinforcement where the stimulus

presentation is auditory, without visual support, and no sure guidelines from the experimental literature for the use of reinforcement with radio instruction.

During 1975, we used two types of reinforcement for exercises presented orally--giving the correct answer followed by a repetition of the exercise statement, or giving only the correct answer.

Full reinforcement:

Radio: "How much is 2 plus 3 plus 1?"
Children respond.
Radio: "Yes, 6 is the sum of 2 plus 3 plus 1."

Answer-only reinforcement:

Radio: "How much is 25 minus 1?"
Children respond.
Radio: "Yes, 24."

The first method allows the child who has responded incorrectly to rethink the problem or at least to have clearly in mind the exercise to which he gave the wrong answer. The second method signals the child that he answered incorrectly but, unless he remembers the exercise, he has no opportunity to learn from his mistake. Although the first method gives more information, it is time-consuming and, if most of the children are responding correctly, redundant as well. We favor using the first method if the exercise is one that we expect the children to memorize eventually. In this case we reinforce 2 + 3 with a repetition of the stimulus. We do not ordinarily use exercise repetition with a question such as "Which is longer, a broom or a worm?" However, when giving quick drill on basic combinations (How much is 2 + 3? 4 + 1? 6 + 2? . . . .), for example, we do not repeat each exercise, because this tends to break the rapid-fire rhythm of the presentation and also because the first statement of an exercise is so close in time that few students will have forgotten it. In subsequent work we have used a chorus of children's voices, rather than an adult character, to give either the correct answer or the answer with stimulus repetition.

Without instruction, children do not know how to use their knowledge of the correct answer to make corrections. Thus, we cannot assume that a child will change a written wrong answer when given the correct answer (if this is what we want him to do), without teaching him how to do so. In our work with the first grade, we were reluctant to spend radio time teaching children how to correct written work, and we left that task to teachers. Instead, we first asked children to respond orally, then we gave the correct answer, and only after that did we ask for a written response. The following is a sample dialogue of such an exercise.

Oral reinforcement before the exercise is written:

Radio: "Think quietly, how much is 8 minus 5?"
(Pause - 8 seconds)
Radio: "Tell me, how much is 8 minus 5?"
Children respond.
Radio: "Yes, 3. Now write the answer on the dotted line."

This method of reinforcement makes it highly probable that no child will write an incorrect response. An examination of the worksheet data for this exercise indicated that three students (of 209) wrote 13, the sum of the two numbers, and there were five other miscellaneous errors. Thus, even telling children the correct answer does not prevent errors, although, of course, the probability of a correct response is high.

Concrete Materials

There is almost universal agreement today that children in early primary grades should use concrete materials while studying mathematics. However, Nicaraguan schools have no money available for the purchase of materials, nor even any central method for distributing materials that might be obtained free. Thus, each teacher is individually responsible for their provision, and their use is somewhat limited.

A number of problems arise when children are asked to handle objects during a radio lesson. The objects may be dropped, misplaced, argued over, or even thrown around the room. The teacher may fail to distribute the materials or may hand out the wrong quantity, in which case the children are unable to follow the directions given by the radio. The fast pace of the radio lessons makes it difficult for teachers to cope with such problems during the lesson. Furthermore, because of the great variability in the physical adeptness of young children, it is difficult for the lesson developer to estimate the appropriate amount of time to allow for using materials. The physical conditions under which the children work are often less than adequate. Frequently, desks slope or have very small working areas. Both these aspects, adeptness and working space, must be attended to in designing activities with materials, and only classroom observations can provide the appropriate guidelines.

We have found that, as both the children and the lesson developers gain experience, many of the obstacles to the use of materials during the radio lessons are overcome. Most of them are entirely avoided when children use their fingers as concrete materials and we do this whenever possible.

Concrete materials are much easier to use during the postbroadcast segment of the lesson than during the radio lesson because the flexibility of the classroom situation permits the teacher to cope with difficulties that arise. We regularly encourage teachers to provide concrete experiences for students and we present suggestions for these activities in the teacher's guide.

Mixed Drills

The research literature on the effect of practice on learning supports the proposition that skills need to be practiced regularly to be maintained and that distributed practice is superior to massed practice (Underwood, 1961). Thus, a given amount of practice is more valuable when it occurs in short, frequent sessions than in longer, less frequent sessions. In a classic paper that summarized 48 unpublished studies, Wilson (1925) concluded that drill

should have the following attributes in order to be effective:

1. It should be on the entire process.
2. It should come frequently and in small amounts.
3. Each unit should be a mixed drill.
4. It should have a time limit.
5. Examples in a unit drill should be presented in order of difficulty.
6. It should include verbal problems.
7. It should facilitate diagnosis.

With these experimental results in mind, we developed a lesson structure that incorporates several different topics in each lesson, as well as providing different types of activities and different modes of responding. (The structure of the lessons is described more fully in Chapter 7.) Each new topic, soon after it is introduced, is practiced in short exercise sets mixed with examples of related topics previously introduced. This serves both as a review of the older topics and as practice for the children in differentiating related concepts and words. For example, soon after the concept <u>less</u> is introduced it is practiced in mixed drill with exercises on <u>greater</u>. Much of addition and subtraction is practiced in mixed drills.

Differential Learning Rates

Radio instruction, in its usual implementation, is group paced and provides the same instructional messages to all children. We do not know what advantages or disadvantages this method holds for teaching children.

It is well known that children learn at different rates, but it is not at all clear how to structure learning programs to accommodate this fact. Schoen (1976) recently surveyed the results of nearly 100 studies of the effectiveness of self-paced mathematics programs. Thirty-six of these studies compared achievement levels of elementary-school children in individually paced programs with that of children in traditional group-paced programs. In these studies all students (or classes) were randomly

assigned to treatments, and standardized tests were used to measure student achievement. Schoen reports that, of the 18 comparisons made for Grades K through 4, five favored the individually paced program, five favored the group-paced program, and eight showed no significant difference between the two. Such results fail to demonstrate the superiority of either individual pacing or the traditional instructional organization. However, the studies cited by Schoen are probably not directly relevant to assessing whether the group pacing of radio instruction is detrimental to students, because teachers in group-paced classrooms do not usually treat all children alike. We can find no experimental results that indicate how much this more subjective type of individual attention contributes to student learning.

The potential defect of group-paced radio lessons is that they may move too quickly for some children and too slowly for others. It seems likely that any attempt to compensate for one of these difficulties will aggravate the other. Thus, extra review material for slow students might well prove boring for the fast students, making them less attentive to the lessons as a whole, while more difficult material chosen to challenge the fast students may confuse and alienate the slow students, who then give up listening.

In our experience thus far we have encountered surprisingly few difficulties with group-paced lessons. The lessons do move too quickly for some children, and we encourage teachers to give extra attention to this group during the lesson. However, the segmented structure of the lesson ensures that no difficult set of exercises will continue for long. Thus, for most of the slow children, the discouraging experience rarely lasts long. We have only occasionally observed behavior that would suggest that bright children are bored. This may be attributable to the novelty of radio lessons. However, we have found in our work with other mathematics programs that young American children do not object to exercises that are easy for them (for supporting data on the drill performance of gifted students, see Suppes & Ihrke, 1967) and the bright Nicaraguan children seem to be responding in the same way. And, as we remarked earlier, the fast pace and segmental structure of the lessons militates against restlessness.

THE RADIO MATHEMATICS PROJECT

At the end of first grade we experimented in several lessons with radio-directed activities for two different groups of students in the same classroom. We asked the teachers to divide the class into a fast group named Eagles and a slow group named Tigers. Then, starting with physical activities and progressing in subsequent lessons to mathematics exercises, we assigned different tasks to the Tigers and the Eagles. In the earlier lessons we asked the two groups to respond alternately; later they were asked to do different things at the same time. For all lessons, the instructions for one group were given by a female voice, for the other by a male voice. One of the more complex activities used, for both groups, the same display on the worksheet. The following is an example of the worksheet display.

24 90 49 40

Tigers were asked to circle the largest number and Eagles were asked to circle the number 24. The instruction to each group was given only once and the entire presentation took 41 seconds. The children followed this complex instruction surprisingly well. For five exercises of this type the overall error rate was .1; the proportion of children in either group giving the correct response for the other group was .03.

The work with groups conducted during 1975 convinces us that we can successfully differentiate practice for two groups of students during the radio broadcast. However, there are many problems associated with this technique. One of the difficulties we encountered was the disparity in sizes of the two groups. We offered little guidance to the teachers in assigning children to the two teams. Some teachers put into the Tigers group only those children that they predicted would be first-grade failures. Consequently, in those classrooms the Tigers were a much smaller group, which caused a noticeable difference in at least the volume of oral responses. This was unfortunate, since it was the slower Tigers who would probably have benefited most from the greater peer-group support. However, if we were to encourage the teachers to assign approximately half of the class to each group, there would

be far less homogeneity among groups from different classrooms and we would be once again faced with the difficulty we were trying to circumvent, that is, the spread of ability within the listening group.

Conclusion

This chapter has examined the instructional method used by the Project and the ways in which we have implemented principles of effective instruction. The following principles have guided our work.

1. Instruction is more effective when children respond actively.
2. Reinforcement (knowledge of results) increases the rate of learning.
3. Children's thinking progresses from the concrete to the abstract and practice with concrete materials facilitates learning.
4. Practice is more effective when distributed over many short sessions than when concentrated in fewer, longer sessions.
5. Children learn at different rates; instruction for each child should be tailored to his learning rate.

The Project lessons called for a high response rate and increased in pace throughout the year. We experimented with various methods for giving students correct answers and, as the year progressed, we increased the proportion of exercises for which reinforcement was given. We found ways of using concrete materials during the radio lesson and developed a lesson structure that provided a high degree of mixed drill. Finally, we experimented with a method for providing differentiated instruction within the context of a radio lesson. It is clear to us that radio can be used as an effective instructional tool and, while some of the principles we have discussed are more difficult to implement than others, the lesson design we have adopted can be defended on theoretical as well as practical grounds.

THE RADIO MATHEMATICS PROJECT

CHAPTER 7

RADIO LESSON DESIGN

A daily mathematics lesson in a Nicaraguan primary school lasts one hour. Project lessons occupy the full hour, using the first half hour for the radio lesson and the last half for activities directed by the teacher. The two portions of the lesson are usually connected by a transition segment, which is a set of exercises introduced by the radio program and completed by the children after the program terminates. The mathematical content of the full hour is specified by the Project; the postbroadcast portion is presented to teachers as a list of suggested activities contained in a teacher's guide. Teachers are free to use the guide as they choose, and we do not assume that children will have studied the material assigned to the postbroadcast portion of the lessons.

In this chapter we examine in detail how the curriculum structure described in Chapter 6 is translated into radio lessons. A typical lesson, Lesson 96, will be discussed to illustrate the lesson format that was used during 1975. Appendix F presents in full the materials associated with Lesson 96, including an outline, a script, notes to the script writer, and a teacher's guide.

Lesson Organization and Structure

Project radio lessons are composed of instructional segments and entertainment segments, and these are clearly distinguished from one another during preparation of the lesson. (The distinction may not be as sharp for the listener: "Entertainment" segments sometimes have mathematical content and "instructional" segments are sometimes entertaining to listen to.)

Instructional Segments

We described in Chapter 6 the preparation of lesson segments as units of curriculum structure. Each segment

consists of a set of exercises whose mode of presentation is specified by the curriculum developer. In constructing a lesson, the curriculum developer selects an appropriate set of segments for the radio and postbroadcast portions of the lesson. The constraints on this process include maintaining the proper prerequisite relationships between segments, assigning segments to the radio and postbroadcast portions of the lesson, providing variety in exercise presentation, student response format, and worksheet use, and ensuring that each part of the lesson fits into its allotted time.

In Chapter 6 we discussed the issue of placing lesson segments in the proper instructional order; this is the most important criterion for assigning segments to lessons. There are also constraints on the placement of segments defined for a single class of exercises. The first segments defined for a class should be presented near each other in time (usually in successive lessons) to give students an adequate opportunity to learn the new skill. Thereafter, practice should be more widely spaced.

With the exception of a few topics that required extensive use of materials, for example, measurement, all initial teaching was placed in the radio portion of the lesson. Thereafter, practice was assigned to either part. Most frequently, oral drill was given by the radio and sets of ten or more written exercises were reserved for the postbroadcast portion of the lesson.

Modes of exercise presentation. Exercise presentation varied along several dimensions. Exercises were presented (a) as computation exercises without contextual support or as story problems, (b) with or without accompanying visual support, and (c) in multiple-choice or free-response format. The first of the following examples is in multiple-choice format, the second is a computation exercise eliciting a free response, and the third is a story problem eliciting a free response.

1. Which is greater, four or seven?
2. What is 5 plus 10?
3. Juan earned 5 centavos yesterday and 10 centavos today. How much did he earn altogether?

Each of the above exercises might be accompanied by an illustration on the student worksheet. Furthermore, all of the exercise types mentioned above might require either a written or an oral response. The Project followed the practice of presenting all exercises orally during the broadcast portion of the lesson. The exercise was read aloud even when it was printed on the worksheet and the student was asked to write the answer. Often, the children were asked to give an oral response before writing the answer.

Types of student responses. As we have discussed earlier, maintaining a high rate of student response is a central feature of the lessons designed by the Project. The radio lessons elicit several types of oral responses from children. Although the radio cannot actually respond to children in a classroom, it is possible to structure dialogue so that children's oral responses can be anticipated. In this way a type of interaction between a radio character and the children can be established that engages their attention. Oral responses include such "conversations" between the children and radio characters, answers to mathematics exercises, recitation--counting by rote or reciting the days of the week--and singing.

We often found it useful to ask children to delay answering aloud, typically by asking them to think about an exercise, pausing, and then asking for the answer. We call this a deferred response. We used the deferred response to give all the children an opportunity to think of an answer without interruption by the students who were able to respond quickly. The decision to use it depended partly on the content of the exercise and partly on its position in an instructional sequence. For example, we expected first-grade students to memorize the basic addition combinations (sums of two one-digit addends) and in these exercises we started with deferred responses to allow the children time to count on their fingers. Eventually, we moved to quick oral drill, expecting them to answer immediately from memory. (For an experimental study of such exercises and the kind of theory that will help explain the transition from counting to memorizing, see Suppes & Groen, 1967.)

For the first-grade lessons produced in 1975, all written responses called for during the lessons were made on the student worksheet. Students responded to multiple-choice exercises by marking the correct choice; for free-response exercises they wrote numerals or words or drew pictures.

Physical activity is another type of response that the radio characters asked of the children. Children were asked to hold up fingers, handle materials, or point to pictures or numbers on the worksheet. At least once during each radio lesson the children played a game that required gross motor activity. Such games were severely limited by the crowded conditions that exist in many classrooms but the children enjoyed them, and accommodated themselves well to the space limitations.

Entertainment Segments

Project lessons included a variety of segment types that were designed to entertain. We found certain types of segments more successful than others, as judged by observers in the classrooms. Early in the year the lessons used stories, usually consisting of a series of episodes presented between instructional segments. Classroom observers felt that children did not follow the plots from one episode to the next; consequently, the stories were simplified. However, even these simpler stories did not appear to engage the attention of the children. Therefore, starting with Lesson 95, stories were eliminated completely.

Other types of entertainment were more successful. We used songs, poems, riddles, and games. Many of the songs were about mathematics. Lyrics were written by staff members who then turned them over to Nicaraguan musicians to set to music and record. Lyrics for songs were printed in the teacher's guides and teachers often helped children learn the words.

In early programs we used verbal transitions from one activity to another. For example, two characters might discuss what the next activity would be. These seemed repetitious so we reduced the number of verbal transitions and used sound transitions instead, which were often, but

not always, music. Sound effects such as chimes were also used.

The Lesson Outline

The decisions about the mathematical content of a lesson were recorded in a lesson outline that served as a guide for all further work on the lesson. An English translation of the outline for Lesson 96 is shown in Figure 7-1. Most lessons had an accompanying set of notes for script writers; the notes for Lesson 96 are shown in Figure 7-2.

The outline gave the following information, in columns starting from the left: segment number, strand and class identification number, mode of presentation, column of the worksheet occupied by the segment, type of response, and exercises to be used. The last column also contained a three- or four-word description of the topic. When the curriculum developer felt it was necessary, the exact text for an exercise type was included in the outline (see Segment 5 in Figure 7-1) or in the notes to the script writer (see note for Segment 4 in Figure 7-2).

Some aspects of the lesson were not included in the outline because they were general procedures known to the script writers. These included the general rule of reading all exercises aloud, using standard instructions regarding the worksheet, providing reinforcement for all except test exercises, and allotting time for individual exercises. In general, two seconds were allowed for an oral response when students were expected to respond from memory or when only one computation was involved (see Segment 3 in Figure 7-1); eight seconds were allowed for writing a single numeral; seven seconds for circling a multiple-choice response, and so on. The response times were shown on the outline only in special cases.

Preparation of a Radio Script

A lesson script was prepared in several stages. The instructional material for each segment was written

Lesson 96; Version 1; First Grade; Prepared September 7, 1975

Materials: WS #96; number cards with numerals from 0 to 100

Segment	Strand and number	Presentation	Part of WS	Type of response	Title and/or example
1	ADD 62.1	Radio		Oral	Oral addition, $a + b + c \leq 12$, delayed oral response; 1 + 2 + 4, 2 + 3 + 1, 4 + 1 + 2, 5 + 2 + 1, 3 + 3 + 4, 5 + 4 + 3
2	NUM 227.1	Radio		Oral	Rote counting by 2's from 2 to 50, oral response
3	SUB 37.2	Radio		Oral	Oral subtraction, ab - 1; 32 - 1, 25 - 1, 16 - 1, 47 - 1, 14 - 1, 28 - 1, 20 - 1, 36 - 1
4	NUM 216.2	Radio	1	Oral MC	Reading numerals, 0 - 100; 79, 99, 44, 100, 77; oral and multiple choice response
5	SUB 38.1	Radio	2	Oral NUM	Horizontal subtraction, $a - b \leq 9$; "How much is eight minus five? (pause) Write the answer on the dotted line." Written response
6	TST	Radio	3 & 4	See notes	Test
7	NUM 228.1	Teacher	5	NUM	Predecessors, 2 to 12, written response
8	ADD 56.3	Teacher	6 & 7	NUM	Horizontal addition, $0 \leq a + b \leq 9$, written response
9	NUM 223.0	Teacher with cards		Oral	Reading numerals, 0 - 100, on cards; oral response

Figure 7-1. Outline for Lesson 96 (translated).

RADIO LESSON DESIGN

Notes to Script Writers

Lesson 96

Segment 4.	"Find the flag with the pineapple. In that box put your finger under the number 79. (Pause) Tell me, how is 79 written? (Pause) Yes, 79 is written with a 7 and a 9. Now circle the 79."	
Segment 5.	Given for the first time. Read the complete exercise; then solve it.	
Segment 6.	"Count the balls and write the number below."	(12 sec)
	"Draw a line around the circle that's divided into fourths."	(5 sec)
	"Circle the number 39."	(7 sec)
	"Write on the line the missing number."	(7 sec)
	"Circle the number 90."	(7 sec)
	"Write the number that follows that one."	(8 sec)
	"Circle the largest number."	(8 sec)
	"Think--how much is five minus four? Write the answer."	(12 sec)
	"Write the number that goes before that one."	(8 sec)
	"Write the answer to seven minus three."	(12 sec)

Figure 7-2. Notes to script writer for Lesson 96 (translated).

separately, although the dialogue for each segment used the same established radio characters, Carlos, Lulu, and Lobo. The entertainment segments were also prepared separately. Finally, all the segments were incorporated into a single script, with music or dialogue providing the transition from one segment to another. Instructional segments were usually presented in the order in which they appeared in the outline; occasionally the script department suggested a change in the order.

Guidelines for Writing Instruction.

From the experience of the first year, the Project staff formulated a set of guidelines for radio presentation of instructional material.

1. It is not necessary to repeat oral exercises. We found that children are able to respond with only a single presentation of an exercise, and repeating instructions seems to teach the child that he does not have to listen the first time.

2. When presenting exercises orally, it is preferable to give the general direction first, the numbers last. For example, we say, "How much is one plus two plus four," not, "One plus two plus four is how much."

3. When children recite--numbers, days of the week, and so on--it is necessary to establish a rhythm for them. It is also important to tell them clearly where to start. We have taught the children to wait for the radio to tell them when to start, and we establish the rhythm with drum beats or beating sticks.

4. Children must be told not only when to start an activity, but when to stop. They do not automatically sit down after being asked to stand up, or put down their pencils when they complete an exercise. If we do not explicitly indicate the end of an activity the children seem to wait for something more to happen.

5. Children should not be misled into thinking they know the task you are presenting. (If they think they know the task, they will do it.) If you want them to circle the cat, do not say, "Look for the horse; next to the horse is a cat; circle the cat." They will circle the horse.

6. Children should be kept active. We try not to let more than 60 seconds go by without asking them to do something.

7. Instructions should be phrased in the most straightforward manner possible with simple words and short, syntactically simple sentences. However, given a choice between a shorter sentence and simpler syntax, one should choose the simpler syntax. The type of syntactic complexity that causes the most trouble is modifying phrases. The instruction "Count the ducks that are in the water" is difficult because of the phrase "in the water." If this were a very new task for the children, we would write the instruction in three sentences:

Look at the ducks.
Some of them are in the water.
Count the ducks that are in the water.

If the children were more experienced, we would use one sentence to focus attention on the ducks and a second to give the instruction to count the appropriate subset.

8. Instructions can be shortened as children become familiar with them. For example, at first we used the phrase encerrar en un circulo (enclose in a circle). By Lesson 96 (Segment 4) this has become encierren (circle).

9. Strict vocabulary control is not necessary because the language is verbal, not written. It is acceptable to use words that may be unfamiliar to some children, provided the child need not understand the word to follow the instruction. Consider an instance in which the accompanying worksheet section has only one figure. If we give the instruction "Look at the square. It is divided into four parts" there is only one thing for the child to look at, so the word square need not be understood. Our rule of thumb is that use of a word we have not taught the children is permissible if "thing-a-ma-jig" can be substituted for it and the instruction remains understandable.

10. Instructions may differ for oral and written responses. When asking for oral responses, one can ask more difficult questions and make the instructions more concise. For a good oral response, only one-third of the

children need be able to respond (and hence to understand the instruction). At first only the better students give the answer, but they serve as a model for the other students who learn by this means what is expected of them. Instructions for written responses must be directed towards the slowest children in the class so that they understand the directions, even if they are not able to respond correctly.

11. There should be no background sound during the presentation of directions or exercises and silence should be maintained while children are given time to respond.

Instructions for Using the Worksheet

The combination of an unambiguous labeling system and clear directions enables young children to keep their place on a complicated worksheet. We used a double-identifier system, illustrated in Figure 7-3 and Figure 7-4, to identify each location on the worksheet. All rectangles in a column have the same outer identifier (a flag, box, or kite); each rectangle within the column has a unique inner identifier (pineapple, ball, etc.). During the early lessons when we were teaching children to use the identifier system, we never repeated any inner identifier on a page. By the 96th lesson, the system was sufficiently familiar that one ice-cream cone in a box and another in a kite caused no confusion.

During several of the earliest lessons, time was spent teaching the children the names of all the identifiers to be used throughout the year. When the identifiers were familiar, the children were taught to use their fingers to point to the appropriate identifier. By the second half of the year the instructions for using the worksheet were much abbreviated.

This system for identifying and locating portions of the worksheet proved successful and allowed the use of up to 30 exercises on one side of a worksheet. With older children who could tolerate smaller print, we could probably increase the density of exercises even further.

96 Nombre Número

93 85 61 79	8 - 5 = ...	
68 99 76 58	9 - 8 = ...	
44 37 94 100	7 - 3 = ...	33 35 31 39
89 78 100 97	9 - 4 = ...	21 22 23 ___ 25
100 29 86 77	8 - 6 = ...	70 80 10 90

Figure 7-3. Student worksheet for Lesson 96, side 1 (reduced size).

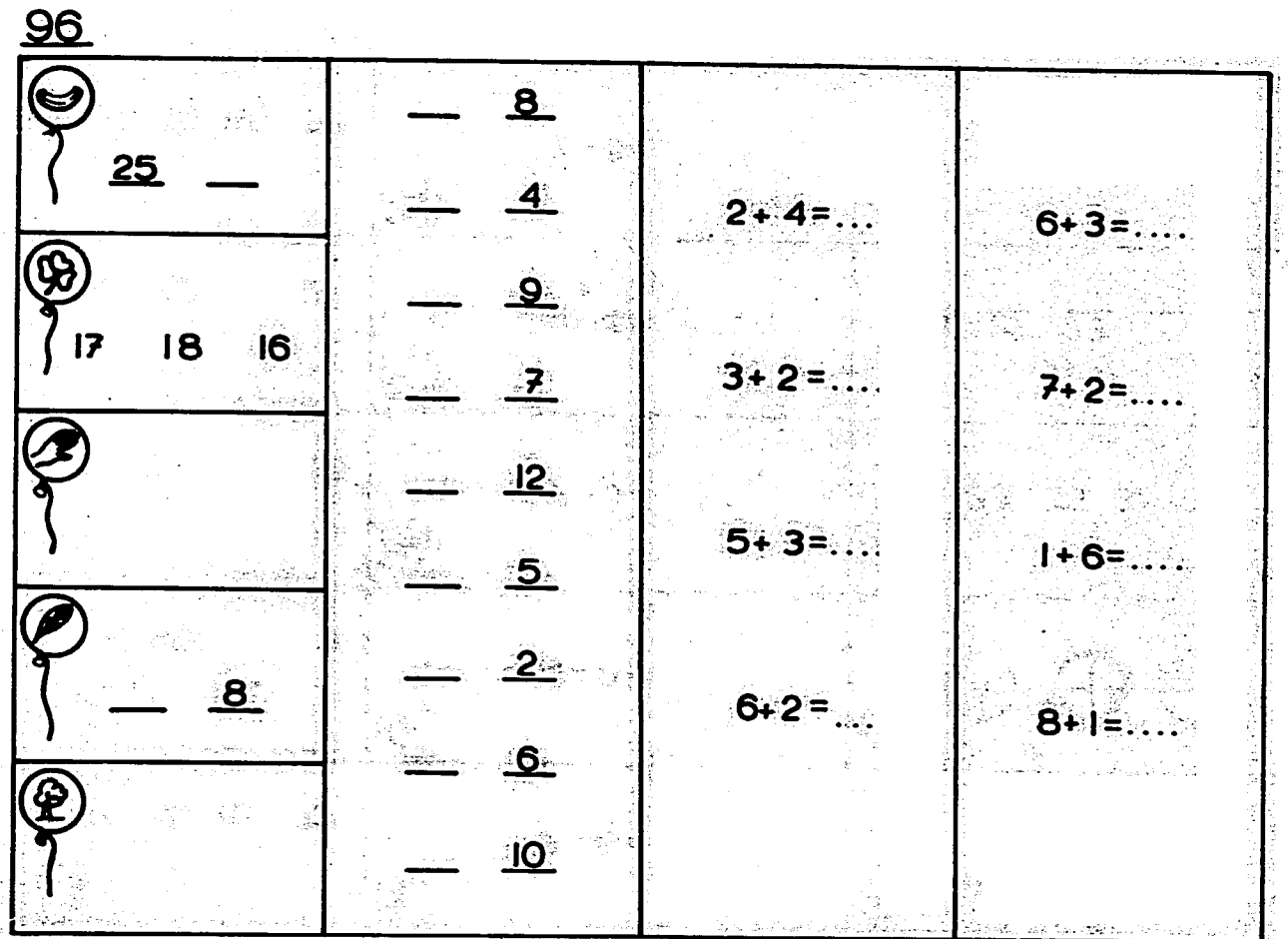

Figure 7-4. Student worksheet for Lesson 96, side 2 (reduced size).

RADIO LESSON DESIGN

Characteristics of Lesson 96

Lesson 96 exemplifies the lesson format that evolved as a result of the experimentation carried on during the first year. Summary statistics describing the radio portion of Lesson 96 are presented in Table 7-1. The shortest segment in the lesson was the 25-second counting exercise. The longest segment contained 10 exercises and lasted almost four minutes. For some segments the number of responses was greater than the number of exercises, because children answered first orally and then in writing.

Table 7-1

Summary Statistics for Instructional Portion of Lesson 96

Segment number	Number of exercises	Number of responses	Total time		Time for pauses	
			min.	sec.	min.	sec.
1	6	6	3	4.5	1	2
2	1	1	0	25		
3	8	8	1	30	0	16
4	5	10	3	13	0	48
5	5	10	3	59	1	31
6	10	10	3	11	1	29
Total	35	45	15	22.5	5	6

The distribution of responses among types (oral, written, physical) for the entire lesson is shown in Table 7-2. The children were asked to respond 50 times during the broadcast and to work 17 exercises on the worksheet during the postbroadcast period. Of the 67 responses, 62 were oral or written answers to mathematics exercises. In this lesson as in most, oral responses were predominant during the broadcast portion. The number of coded physical activities is small. However, there are some actions each child is asked to perform that are not counted as responses, for example, moving his fingers to a new place on the worksheet, picking up a pencil, or turning over the worksheet. Although these are both too frequent and individually too insignificant to code, they contribute to the activity level of the children. Each of the separate types of activity in the game--sawing, hammering, and so on--is considered a single response.

A characterization of some linguistic aspects of the script for Lesson 96 is presented in Table 7-3. (The analysis was performed, of course, on the Spanish script.) Utterances were divided into two types--those directed to the children and those directed to other radio characters. Utterances directed to the children always asked for a response from the children. In Lesson 96 the only dialogue between radio characters occurred in the joke; the poems were also coded as not directed to children. As shown in the table, approximately 85 percent of the utterances were directed to the children.

Table 7-3 shows other characteristics of the language used in the lessons. Sentence length averaged less than seven words for both types of utterances, a reflection of the principle mentioned earlier of favoring short, simple sentences. There was much redundancy in the words directed to the children; the 918 words were repetitions of 169 different words.

Conclusion

During the year the lessons adhered to the basic design that had been developed for the California and Nicaragua pilot tests, but methods for implementing this

Table 7-2

Frequency of Response Types in Lesson 96

Segment	Number of Responses				
	Physical	Oral	Written		Total
			Multiple choice	Constructed	
Activity directed by radio					
1		6			6
2		1			1
3		8			8
4		5	5		10
5		5		5	10
6			4	6	10
Song		1			1
Game	4				4
Subtotal	4	26	9	11	50
Activity directed by teacher					
7				9	9
8				8	8
Subtotal				17	17
Total	4	26	9	28	67

Table 7-3

Linguistic Characteristics of Script for Lesson 96

Characteristic	Directed to children	Directed to other characters	Total
Number of words	918	140	1,067
Number of different words	169	71	
Number of sentences	140	23	163
Words per sentence	6.6	6.5	6.6

iesign were extended and refined with experience. We found it more productive to write instructional and entertainment segments separately and then integrate them into a final script. The lesson outline was developed to provide a channel of communication between the curriculum developers and the script writers, to facilitate the faithful translation of the instructional message into a recorded form. And, finally, from the experience of the year came a set of guidelines for writing instructional material that we feel are applicable to instructional programs with differing subject matter or content.

CHAPTER 8

OPERATION OF THE PROJECT

In this chapter we discuss several aspects of the operation of the Project. We first describe the locale of the 1975 work and then turn to the role of the teacher, the classroom visitation program, and the testing program. We end with a discussion of the Project's relationships with school personnel.

Educational Setting of the Project

During 1975 the Project worked in the Department of Masaya, which is approximately 30 kilometers southeast of Managua, the capital of Nicaragua. The department has an area of about 543 square kilometers and is the smallest of the 16 departments in the country. Approximately 30,000 of the population of 94,000 live in the city of Masaya, the capital of the department.

There are approximately 100 public primary schools in the department, with about 170 first-grade classes. The Ministry of Education characterizes schools as urban if they are located within the boundaries of a municipality--otherwise as rural. A comparison of several indices of urbanization for the 10 municipalities in the Department of Masaya is shown in Table 8-1. Two towns, Masaya and Masatepe, stand apart from the others on almost all of the indices: they have larger populations and more paved streets, movie theaters, banks, and telephones than any of the other towns. Visits to the towns supported the conclusion suggested by the data in Table 8-1, namely, that Masaya and Masatepe are far more urban than the other towns. For work during 1975 the schools were stratified into three levels: Schools in Masaya and Masatepe were called urban; those in the other eight towns, municipal; and the remainder, rural.

The distribution of students among grades for the Department of Masaya for 1974 is shown in Table 8-2. Approximately 37 percent of the students were in first

Table 8-1

Indices of Urbanization

Index	Masaya	Masatepe	Niquinohomo	Nindiri	San Juan de La Concepcion	La Concepcion	Nandasmo	San Juan de Oriente	Catarina	Tisma
Population	30,000	6,300	2,300	2,000	1,200		2,600	600	2,000	2,200
Post-primary schools										
Commercial	3	0	1	0	0	0	0	0	0	0
"Ciclo Basico"	0	1[a]	2[a]	0	0	0	0	0	0	0
"Bachillerato"	4[b]	1	0	0	0	1	0	0	0	0
Commuting time by bus to post-primary schools (in minutes)				15	15		30	20	15	40
Minutes between buses to Managua or Masaya	10	30	20	10[c]	45	45	30[d]	20	20	120
Percentage of paved streets	25	30	0	0	0	0	0	0	-[e]	0
Number of movies	3	2	0	0	0	1	0	0	1	0

(Table 8-1, cont.)

Index	Masaya	Masatepe	Niquinohomo	Nindiri	San Juan de la Concepcion	La Concepcion	Nandasmo	San Juan de Oriente	Catarina	Tisma
Number of banks	5	2	0	0	0	0	0	0	1	0
Number of bookstores	4	0	0	0	0	0	0	0	0	1
Number of daily newspapers from Managua	2	2	2	2	1	2	0	2	1	1
Number of telephones	6,500	130	28	7	2	10	2	0	2	6

[a]Includes one private school.

[b]Includes two private schools.

[c]After 10-minute walk.

[d]After 15-minute walk.

[e]Percentage not given; two streets.

Table 8-2

Number of Pupils per Grade, Department of Masaya, 1974

Grade	Urban	Rural	Total
1	4,357	2,825	7,182
2	2,502	1,256	3,758
3	2,201	832	3,033
4	1,741	550	2,291
5	1,338	359	1,697
6	1,172	258	1,430
Total	13,311	6,080	19,391

grade (this figure rises to 46 percent for rural students). The age distribution for first-grade students in 30 classes is shown in Table 8-3. The mean age for urban students is 8.2 years, that for rural students 8.5 years.

Role of Teachers

Teachers were asked to play substantially different roles during the two portions of the daily mathematics lesson. For the radio portion the teachers were asked only to supply the appropriate materials and play the taped lesson. No special prebroadcast activities were planned, nor were teachers given a script for the radio

Table 8-3

Age Distribution of First-grade Students
Test Population

Age	Rural	Municipal	Urban	Total
5	0	0	3	3
6	11	12	13	36
7	70	76	91	237
8	69	95	98	262
9	60	52	46	158
10	24	45	25	94
11	12	16	14	42
12	14	11	8	33
13	3	2	2	7
14	0	1	1	2
15	0	0	0	0
Total	263	310	301	874

[a] 30 randomly selected classes.

lesson. The lesson was designed to be self-contained; it was not necessary for teachers to 'prepare' children to listen or to be familiar in detail with the contents of the lesson. After some experience we decided that the most effective role for the teacher during the radio lesson was in helping the slowest children with written work.

During the postbroadcast portion of the lesson the teacher was asked to present the material in the teacher's guide, modifying it in any way she chose. The guides were relatively brief, usually one or two pages. (A sample, the guide for Lesson 96, can be found in Appendix F.) Often the guide suggested that the teacher supply simple materials for students to use; objects for counting, cards with numbers printed on them, objects to use for buying and selling games. Occasionally supplementary materials were provided, such as play money or cardboard rulers.

Selection of Teachers

During October and November of 1974, 18 first-grade teachers were selected from a list prepared by the Office of the School Inspector of teachers who were expected to teach first grade in 1975. The teachers came, in roughly equal numbers, from rural, urban, and municipal schools. All the schools were accessible year-round and within a 40-minute drive from the Project office.

The choice of teachers was made at the end of the 1974 school year, because we wanted to collect achievement-test data on students in the classrooms of these teachers before the introduction of radio lessons. During the latter half of 1974 staff members visited many first-grade classrooms and we used these observations, as well as the recommendations from the School Inspector, to select teachers of varying abilities. Before school started in February one teacher moved out of the district and another declined to participate because she was pregnant. A third teacher moved to a school where she taught in the same classroom with another first-grade teacher. These two teachers participated in the program, working as a team during the mathematics lesson. Thus, the 1974 experimental population consisted of 17 teachers and 16 classrooms.

OPERATION OF THE PROJECT

Training of Teachers

Participating teachers met weekly for the first month of the school year and approximately once every six weeks thereafter, for a total of eight teacher-training sessions. The initial set of training sessions had several general objectives: to acquaint teachers with the purposes of the lessons, to help them become oriented to their new teaching role, to allow the staff and teachers to become acquainted, and to explain logistical aspects of the lessons, such as distribution and collection of materials and the classroom observation schedule. The sessions also helped the teachers prepare to teach the first 15 lessons without the help of the radio. These 'readiness' lessons were designed to teach the children how to use the worksheet, to familiarize them with the vocabulary and response modes that the radio lessons would use, and to introduce some basic mathematical concepts.

Training sessions were held at the Project office after school and lasted from two to three hours. On the average, about 12 of the 17 teachers attended each session, along with the staff members (usually four) who had participated in planning the session and shared the task of running it. Using an open dialogue between all the participants, we designed the sessions to give the teachers the opportunity to express themselves as naturally and spontaneously as possible. Several principles guided the planning of the sessions: materials presented should be directly related to the needs of the teachers, teachers should be active participants in their own learning experience, they should have experience with the materials they were to teach, and they should feel part of the process of lesson development.

Teachers participated in many different activities. During the first sessions they played the role of students for a radio lesson and worked with the materials prepared for the 'readiness' lessons. They also developed lesson plans for the the first 15 lessons and designed a worksheet to help them become familiar with its structure and use. By the third session, the emphasis shifted back to the use of radio lessons, and the teachers spent time further defining their new role and their specific

responsibilities before, during, and after the radio lesson. In some of the later sessions, the following specific problem areas were examined in more detail: classroom management concerns, such as efficient ways of distributing materials; methods for working with children of different ability levels, especially those having the most difficulty keeping up with lessons; and the use of materials--why the use of materials is important in teaching basic mathematical concepts, what kinds of materials to use, and how to use them to meet specific curricular objectives.

Part of each training session was devoted to discussing logistical concerns: when materials would be distributed and collected, how children were to number their worksheets (and the importance of having the correct student number on each sheet), and when classes would be tested or observed. Teachers were also given practice in using the tape recorder, especially in adjusting sound levels (which they tended to set too high).

For us, one of the most valuable aspects of the teacher-training sessions was the opportunity to obtain from teachers information about how lessons were going in their classes. The staff attempted to maintain good relationships with the teachers, not only to help ensure their cooperation, but also to encourage them to express their opinions openly and honestly. As the year progressed, they felt increasingly free to criticize our work and gave us much useful information as a result.

Classroom Visitation

We used a regular schedule of classroom observations to obtain information about the reception of lessons by students and teachers. Of the 16 experimental classrooms, staff members observed the mathematics lesson daily in six classes, and once a week in five others. The remaining five classes were not observed at all. We chose to maintain only limited contact with one group of classes in order to find out what types of problems arose, how well the teacher was able to cope with them, and whether such classes used the recorded lessons as regularly as those

that were observed. Teachers of these unobserved classes had the opportunity to talk with a staff member once each week when materials were delivered and collected.

Observation Method

The Project method for observing classes became more systematic as the year progressed. During the first three weeks we wanted to know how teachers taught Project materials without support from radio lessons, and we designed an observation form for this purpose. The form was quite simple, providing for a running account of what happened in the classroom.

When the radio lessons began, we devised a form that identified each part of the lesson and asked the observer to comment on the following items for each segment of the lesson: whether directions given by the radio were understood by the children, what proportion of the children participated in each activity, whether the observer thought the children found the exercises easy or hard, whether the children followed the worksheet, how the classroom teacher and children handled concrete materials, whether the mathematical content seemed easy or hard, and whether the teacher followed the instructions in the teacher's guide.

Using this form, the observers were able to provide considerable qualitative information that was quite useful to curriculum specialists and script writers. However, the form did not provide quantitative data that would allow comparisons between lessons or of one part of a lesson with another. About a month after radio lessons began, the observation form was revised to incorporate numerical ratings, on a scale of 1 to 10, for several aspects of the lesson, including the degree of interest displayed by the children, the percentage of the children participating, the percentage of participating children that were working independently, and how well the children appear to understand the material being presented. Observers were also asked to respond to questions posed by script writers or curriculum developers about particular segments or exercises. The observation form for each day's lesson was prepared in advance with each lesson

segment identified in such a way that the observer could recognize when it started and with the special questions typed on the form. Each day when they returned from the classrooms, observers met briefly, compared notes, and gave the observation forms to a staff member who prepared a summary for the day's lesson.

The staff maintained a training program for observers. Pairs of observers visited the same class, and the two observation sheets were used during training sessions to clarify and make more reliable the use of the rating scales. Each observer participated regularly in this exercise.

Lessons Without Project Supervision

Shortly after the beginning of the school year the opportunity arose to work with classrooms in the neighboring Department of Granada. We decided to use these classrooms to test utilization of the program without any direct supervision from the Project staff. We arranged for the School Inspector of Granada to choose six classrooms, gave her some guidance about teacher training, and each week delivered materials to her office. She distributed the materials to the teachers and at the same time collected completed worksheets, which she returned to us. Staff members did not meet directly with the Granada teachers until the end of the school year. The Granada lessons started about two months after the beginning of the school year so the three weeks of 'readiness' lessons were eliminated and some of the early radio lessons were deleted to bring the Granada classes closer to the schedule followed by the Masaya classes. Once they had almost caught up, the Granada classes remained one week behind the Masaya classes. This was done to allow extra time for materials to be delivered.

Testing Program

The children from the 16 experimental classrooms were pretested in March 1975. In April, pretests were administered in nine traditional classrooms that had been

chosen at random from the list of classrooms taught by teachers whose classes had been posttested the previous November. Thus, all of the children who were pretested were taught by teachers whose students had been tested the previous year. Because the Granada classes began lessons so late in the year, it was decided not to pretest them.

All students in the 16 experimental classrooms, the nine traditional classrooms, and the six Granada classrooms were posttested in November 1975. The tests used, and the results, are described in Chapter 9.

Relationships with School Personnel

The Project staff attempted to maintain contact with other people in the school district who were concerned with or interested in our work. The Inspector provided us with letters of introduction and asked all school directors and teachers to cooperate with us. The directors of the schools we worked with were informed of all changes that affected their schools. We also sent out an information bulletin to all teachers in the department to tell them about Project activities.

In our contacts with teachers of experimental classes we stressed that classroom observations and the testing program were not designed to evaluate either teachers or individual students but were for the purpose of improving the instructional program. Staff members did not make evaluative comments to the teachers, except occasionally to give praise. The teachers received no reports from us on how students performed, but we discussed with them ways they could use the student worksheets to evaluate student performance.

The Project also maintained a close relationship with the Ministry of Education. Two Nicaraguan advisory committees were formed, with members drawn from the Ministry, other school districts, and the universities. One committee functioned in a general advisory capacity, examining all our activities, visiting radio classes, and assessing the suitability of the instructional program for its Nicaraguan audience. The second committee had a narrower focus, that of examining the curricular

objectives of the instructional program and advising the staff on their compatibility with the curriculum specified by the Ministry.

CHAPTER 9

RESULTS

In this chapter we discuss the evolution of Project radio lessons under the impact of performance and observation data and present illustrative results from Lesson 96. We also report the results of achievement tests and discuss evidence from these tests pertaining to the oral arithmetic skills of the students.

Design of Project Lessons

Only two aspects of Project radio lessons have remained unchanged from the initial work described in Chapter 2, namely, the use of lesson segments to construct a lesson and the commitment to a high level of student activity. Within this framework the design of lessons has changed markedly. Some of these changes are illustrated in Table 9-1, which compares several characteristics of scripts at four different stages of development: Lesson 4 of the 1974 pilot series, and Lessons 54, 96, and 116 of the 1975 series. During 1975 we simplified the scripts considerably by eliminating stories and making the entertainment portions shorter. These changes are reflected by the smaller number of words and the higher proportion of words directed to the children in the later lessons. Most of the words directed to children are instructional; all of the words directed to other characters are in entertainment segments.

There was a steady increase in the student response rate during the year, which is reflected by an increase in the number of pauses. Each pause indicates a request for children to respond; these more than tripled from Lesson 4, given at the end of first grade in 1974, to Lesson 116, given near the end of first grade in 1975. For Lesson 116, children were asked to respond on the average more than three times per minute. As indicated in the table, the pace of lessons increased gradually during the year. After each increase we observed lessons in classrooms to

Table 9-1

Comparison of Several Characteristics of Scripts at Different Stages of Script Development

Lesson	Year	Number of words			Words per sentence			Number of pauses	
		To children	Other	Total	To children	Other	Mean	Total	Per minute
4	1974	882 (52%)	807 (48%)	1,689	7.74	7.47	7.61	20	.95
54	1975	623 (52%)	575 (48%)	1,198	6.17	7.47	6.73	30	1.59
96	1975	918 (86%)	149 (14%)	1,067	6.56	6.48	6.55	56	2.60
116	1975	884 (79%)	225 (21%)	1,069	4.51	8.04	4.97	68	3.36

ensure that we were not outstripping the capabilities of the children.

The worksheet also evolved from its rather crude beginning in the California pilot lessons. The changes can be seen in Figures 2-1 and 2-2, 3-1 and 3-2, and 7-3 and 7-4, which show worksheets for a California pilot lesson, for a Nicaragua pilot lesson, and for Lesson 96. All of the worksheets used a column format, but the double-identifier system for labeling locations was not developed until 1975, after we had experienced many difficulties with the earlier formats.

An issue of some concern in the design of classroom radio lessons is the allocation of teaching responsibilities between the radio and the classroom teacher. Our initial plan was to ask the teachers to share many teaching tasks with the radio portion of the lesson. At the beginning of the 1975 school year, for example, we asked the teachers to teach the children how to use identifiers and how to find their way around the worksheet, using a strictly specified vocabulary so that the children would learn the same words and phrases they would later hear in the radio lessons. This was not very successful because many teachers substituted alternate expressions. We think these tasks would have been more effectively taught by radio.

We found that teachers were most successful when asked to teach concepts and skills they understood well, using methods with which they were familiar. If a task was not a familiar one, an explanation in the teacher's guide did not sufficiently prepare the teacher to carry out the required procedure. However, teachers were able to provide follow-up work for students using the methods they had learned about in the radio lessons. From these experiences emerged the following general rule: The radio lessons provide initial teaching for almost all concepts and skills; subsequent work is shared by the radio and the teacher. An exception to this general rule occurs for group activities involving a variety of materials. These are clearly handled best by the teacher.

The teacher must also provide all assistance needed by individual students. To help teachers diagnose student difficulties, the Project indicated specific instructional

segments as suitable for diagnosis. These were called diagnostic segments and were listed separately in the teacher's guide. We suggested that the teacher check the worksheet responses of any child she thought might be having difficulty. The guide gave specific suggestions for remedial activities for different types of errors, but none of the teachers whose classes were observed used these suggestions.

Classroom Observations

Classroom observations proved to be the most fruitful source of information about the lessons. Each lesson was observed by at least three people in three different classrooms. Observers completed observation forms and daily summaries of these were prepared. Although we eventually developed a classroom observation form that allowed the collection of quantitative information about observers' reactions, we found that the numerical data added nothing to the information we obtained from the daily summary sheets. Some deficiencies of the numerical rating scheme could have been overcome. For example, the observers tended to use only the upper half of the 10-point scale; they could have been taught to spread out their ratings. We found, however, that a low rating was useful to us only when the observer provided an explanation for it, in which case we could obtain the needed information without the rating. Once again, we use Lesson 96 to describe the type of information classroom observations provided.

An unusually large number of observations--12 in seven different classes--were made of Lesson 96. Among those reporting on the lesson were regular project observers and members of the curriculum-development and script-writing staffs, who were required to visit classrooms regularly.

Observers rated student interest in each segment; the interest level for the entertainment segments ranged from 5.1 to 7.7 points, and for the instructional segments from 5.5 to 7.3. Observers noted that, during the opening rhyme, children in two classrooms laughed and responded

actively, while in three other classrooms the students paid attention but otherwise did not react. Because the script department was experimenting with repetition of jokes, observers were asked to respond to a special question on the observation form: "Did the children laugh more this time than the first time the joke was presented?" The results (four classes less, one class the same, one class more) suggested that repeating the joke did not work well.

During the instructional segments, observers were asked to judge how well students understood the content of each segment. They rated Segment 3 (oral exercises on subtraction of 1 from a number) lower than the others, noting that, in one class, only three children answered the first two exercises. The observers' comments about Segment 4 are summarized here:

> One observer noted that the instructions were unnecessarily thorough, as the children answered the exercises with the first instruction. In another class an observer noted that the children worked in unison and worked well. In a third class it was noted that the children understood well the mechanics of the exercise. However, in a couple of other classes it was noted that some children circled the number when the radio first referred to it, rather than waiting for the later instructions to circle it.

Segments 7 through 9 were given in the postbroadcast portion of the lesson. The observers noted that teachers gave few instructions for the worksheet exercises but gave special help to the slow groups. The final segment (Segment 9), using number cards, was to be conducted entirely by the teacher. Here is a summary of the observers' comments.

> In two classes the activity was not done. In one class the teacher wrote on the blackboard in mixed order the numbers from 80 to 100. There followed activities of reading the numbers aloud and circling certain numbers, by the whole

> class, by groups of children, and by individual children. In another class the teacher went through the number cards in order from 0 to 100. The children were able to count by rote and thus could answer without actually reading the numbers on the cards. This teacher then spent much time organizing the second activity (giving cards to each group of children). One observer noted that the children often reversed the digits in a number, for example, 23-32 and 64-46.

It is apparent from these comments that most teachers did not follow the sequence of activities suggested in the teacher's guide (Appendix F). This may have happened because the instructions in the guide were not sufficiently explicit. Alternatively, some teachers may not have spent much time planning for the exercise; conversations with teachers and classroom observations indicate that this was often the case.

Measures of Student Performance

Completed student worksheets were collected and analyzed throughout the year. We found the data useful for indicating weak places in individual lessons and in more global aspects of curriculum design, even though the experience with the 1974 pilot lessons (discussed in Chapter 3) identified sources of contamination that reduced the reliability of the results. We will use Lesson 96 to illustrate the types of information we obtained.

Worksheets for Lesson 96 were turned in for 209 children from 15 classes; the number of children per class varied from 5 to 23. The performance level of worksheet responses was high. As shown in Table 9-2, the mean percentage correct for the five segments requiring written responses ranged from 86.7 to 98.6, and the standard deviations were all small. The percentage correct for individual classes ranged from 78.9 (in the class with five children) to 98.6, with a mean for the 15 classes of 90.0 percent (SD = 5.44).

Table 9-2

Mean Performance by Segment for Lesson 96, Worksheet Responses

Segment number	Mean percentage correct	Standard deviation
4	98.6	.83
5	96.8	1.10
6	86.7	5.65
7	86.8	2.96
8	91.6	3.13

For Segments 4 and 5, students responded orally and were given the correct answer before being asked to write on the worksheet. Thus, we expected the high percentages correct found for these segments. The results for Segment 6 (an embedded test) are more interesting because correct answers were not given. These results are presented in Table 9-3. (The full text of each exercise appears in Figure 7-2.)

The number of different wrong answers for the exercises in Segment 6 ranged from two (for the multiple-choice questions with three choices) to 20 for Exercises 4 and 6. Table 9-3 shows the most frequent wrong answer for each exercise. Several common errors are illustrated here. For Exercises 1, 4, and 6 the most frequent error is the correct answer written with the digits transposed. In this case some children who answer incorrectly seem to be capable of performing the task the item is designed to test but are failing because of another deficiency. The most frequent error for Exercise

Table 9-3

Performance on Exercises from Segment 6, Lesson 96

Exercise number	Content	Percentage correct	Most frequent incorrect response
1	Count the balls (15)	86.6	51 (5 %)
2	Which is divided in fourths? (3 choices)	91.9	half (2 %)
3	Circle 39 (33 35 31 39)	96.2	35 (1 %)
4	21 22 23 __ 25	81.3	42 (3 %)
5	Circle the largest (70 80 10 90)	82.3	10 (6 %)
6	25 __	83.3	62 (2 %)
7	Circle the largest (17 18 16)	77.5	16 (15 %)
8	How much is 5 - 4?	88.5	3 (2 %)
9	__ 8	89.0	9 (5 %)
10	How much is 7 - 3?	90.9	5 (2 %)

5 probably arises from the confusion between largest (in Spanish--mayor) and smallest (menor). This confusion also undoubtedly contributes to the choice of 16 as the correct answer for Exercise 7. However, in analyzing lesson data we have found evidence of a second confusion that is probably present here--a confusion between largest and in last place. These two areas of confusion probably account for the high frequency of the response 16 for Exercise 7 compared with the frequency of the response 10 for Exercise 5.

The analysis of errors exhibited on worksheets has proved more fruitful than an examination of performance levels. Although many errors seem to be random, the most frequent errors can often be interpreted as we have described above--with some skepticism, but with more assurance as patterns emerge.

Even when an error can be interpreted, it is not clear when remedial action should be taken. For example, we know from work with children in the United States that digit reversal is quite common among first-grade children and decreases in frequency as children get older. How much time should be spent during radio lessons helping the approximately five percent of children who appear to have this problem? We decided early in the year not to give any specific remedial work for this type of error and reviewed this decision about halfway through the school year. We looked at worksheet data for the preceding three months and found that, during that time, the proportion of reversed digits decreased slightly. There had, of course, been much practice in reading and writing numerals, although none of it had been directed specifically at the digit-reversal problem. On the posttest, the average occurrence of reversals over 12 exercises was 2.7 percent, which we felt was low enough to justify the decision not to provide specific remediation for this error.

Although we think we made the correct decision in this case, the general problem remains. The trade-off, given limited time, is always between reviewing the old and presenting the new. Deciding which errors should be remedied is a difficult task, and at present we can offer no general guidelines for a solution.

One of our concerns is the degree to which errors are distributed among children: Are some children completely lost while others perform well? The worksheet data, contaminated as they are by copying and teacher help, are not the ideal tool for investigating this question. Nevertheless, in Table 9-4 we show the distribution of student scores for Segment 6. The impression one gets from these results is that errors are distributed throughout the student group--that students cannot be divided into the know-it-alls and the know-nothings. There do not seem to be many children who are completely lost.

We contemplated several ways of increasing the reliability of the worksheet data; we could try to suppress all student cooperation and teacher help, or we might identify a portion of each day's lesson as a test that was to be treated differently from the rest of the lesson. Not only would these solutions have been hard to implement, but they would have distorted the way in which we expected lessons to be used in the future, thus making it difficult to generalize results from the present experimental situation to later use. It became clear that we needed a method for gathering data that did not interrupt the natural flow of a lesson.

The obvious answer was a separate testing program that would sample student performance on a regular basis. During the last part of 1975 we experimented with administering paper-and-pencil tests in a small number of classrooms. In order to increase the number of items about which we could obtain information, we used a multiple matrix sampling design similar to that described in Chapter 4. Each week five classrooms were tested, using five forms of the test. Each form contained 10 items, making it possible to obtain information on 50 items. The tests were administered separately from the mathematics lesson, and occupied 15 to 20 minutes of class time. The classrooms used for testing were rotated so that a classroom received a test only once in three weeks. The paper-and-pencil testing program was a satisfactory substitute for the collection of worksheet data, and its use was expanded in 1976.

Table 9-4

Distribution of Student Scores for Segment 6

Score	Number	Percent
10	89	42.58
9	61	19.19
8	21	10.05
7	14	6.70
6	8	3.83
5	3	1.44
4	9	4.31
3	1	.48
2	3	1.44
1	0	0
0	0	0

Student Achievement

Mathematics achievement tests were administered to the children in the 16 experimental classrooms in March and in November of 1975. In order to gather information about student performance in traditional classrooms, we selected at random nine first-grade classrooms. These students were pretested in April (one month after the experimental classes were tested) and posttested in

November. The six Granada classes were given only the posttest. We present here some comparisons between groups, recognizing that the comparisons are flawed for several reasons, the foremost being that experimental classrooms were not selected at random and that the pretest for traditional classes was administered one month later than the pretest for experimental classes. Furthermore, the number of classrooms used was quite small.

First-grade Pretest. As we discussed in Chapter 4, there were no mathematics achievement tests available for use in Nicaragua. The Project designed all but one of the tests used. The exception was the first-grade pretest. Since we had not been in Nicaragua at the beginning of the 1974 school year, we had no opportunity, prior to 1975, to develop an examination appropriate for beginning first-grade students. We felt that, under the pressure of producing lessons, we would be unable to develop a test early enough in the school year to give us useful information about entry skills. We therefore looked for a commercial test that would be suitable.

We chose the mathematics subtest of the Test of Basic Experiences (TOBE), published by CTB/McGraw-Hill, for which there is a Spanish version. We used the Level-K examination, designed for kindergarten children, because most Nicaraguan first-grade students have had no prior school experience. The test booklet contains only pictures, with one exercise on a page. All directions are given orally.

The Spanish version of the test was designed for Spanish-speaking children in the United States, and we had to change the verbal stimulus for several items. One question asked the children to recognize a U.S. coin, another to recognize an egg carton; in other cases the Spanish usage was not customary in Nicaragua. After these initial changes were made, pilot tests were carried out in two classrooms and additional items were changed. The general directions were also substantially rewritten. The test items are presented in Table E of Appendix A.

The authors of the TOBE suggest that the Level-K form be administered in groups of five or six children under carefully controlled conditions. We were unable to do

this, but we did take special precautions to reduce the extent of copying. In large classes we excused some randomly selected students to relieve the overcrowding that contributed to the problem of copying. In most cases, the test administrators rearranged the furniture in the classroom and changed the seating pattern of students, using books as dividers between students where this was necessary. While one staff member read the instructions, another circulated through the room, encouraging children to work alone.

During March 1975, the test was given to 533 children in the 16 experimental classrooms. In April, the test was administered to an additional 267 students in 9 traditional classrooms. The mean score for all classes on the 28-item test was 20.4 (SD = 4.67).

It is not possible to compare performance of Nicaraguan and American students on the test because the publisher did not standardize the test on a Spanish-speaking population; in addition we changed several items. However, the properties of the test were similar for both administrations. The reliability of the test administered in Nicaragua was comparable to that of the English version in the United States (the KR-20 reliability coefficients were 0.83 and 0.82, respectively). The standard error of measurement for the Nicaraguan administration of the test was 1.91, compared with 2.10 for the U.S. administration. The Nicaragua test contained only one poor item, as measured by the point-biserial correlation.

Test results for individual items are presented in Table F of Appendix A. The mean percentages correct for nine groups of items classified by concept are shown in Table 9-5. Six of the nine means are above 70 percent, indicating that these Nicaraguan first-grade children had a good grasp of basic concepts. The scores were higher than we anticipated, suggesting that we had spent considerable time at the beginning of the school year teaching things the students already knew.

Mean test scores for experimental and traditional classrooms are shown in Table 9-6. The difference in favor of the traditional classrooms is significant ($t = 3.98$, $p < .005$). It seems likely that the higher

Table 9-5

Performance of 1975 First-grade Students on TOBE Test by Concept

Concept	Number of items	Mean percentage correct
Numeration	10	72.6
Fractions	1	44.1
Ordinal numbers	1	44.1
Geometry	4	83.6
Telling time	2	72.8
Weight	2	78.2
Length	2	64.3
Size	2	82.8
Other basic concepts	3	75.4
Total	28	71.9

score for the traditional classes reflects the later testing date; these students had had six weeks of school before testing, while students in experimental classrooms had been in school for only two weeks.

Because of the difference in testing times we cannot determine whether the students in experimental classes and traditional classes began the year with comparable levels of mathematics skills. On the basis of the test results

Table 9-6

Student Performance on 1975 Pretest

Group	n	Items correct: Mean	Items correct: Standard deviation
Experimental	533	19.87	4.88
Traditional	267	21.25	4.07

it seems reasonable to suppose that, if the two groups differed, the traditional classes were better prepared. However, we have no way of knowing in what way an additional month of school would have changed the scores of the experimental group.

We have an additional piece of evidence that relates indirectly to the comparison of the experimental and traditional classes. The 1974 achievement test, described in Chapter 4, was given to children in the classrooms of all those teachers who were subsequently to teach either experimental or traditional classes in 1975 (under Project auspices). The mean scores on the achievement test for these two groups of classes did not differ significantly (the means were 49.0 and 48.7 for the 70 items taken by both groups). That is, the children in the 1974 classrooms of teachers who were to teach experimental and traditional classes in 1975 scored the same on a year-end achievement test. This result suggests that there was no large difference in the competency of the teachers of experimental and traditional classes.

First-grade Posttest. The posttest for first grade was designed by the Project using a multiple matrix-sampling design. The test design was similar to

that used for the achievement test described in Chapter 4. The test used two types of items: G-items were read aloud to an entire class, I-items varied among individuals in each classroom. The distinction between the item types will be clarified by some examples.

	Oral component	Written component
G-item	"What is 2 plus 2?"	___
G-item	"Circle the number 84"	48 84 74 47
I-item	"Find the sum"	12 or + 3
		2 + 2 = ___ or
		21 + 14 = ___
I-item	"Circle the largest number"	2 5 9 or
		21 12 32 or
		79 77 81

The matrix-sampling structure of the test, which had four I-item forms (I-forms) and four G-item forms (G-forms), is shown in Figure 9-1. All I-items were tested in every classroom; one-fourth of all G-items were tested in each classroom. Sixteen different test papers were assembled--each G-form paired with each I-form. G-forms were assigned at random to classrooms, and test papers containing the correct G-form and one of the I-forms were distributed at random to students within the classroom.

The full test contained 40 I-items and 48 G-items. These 88 items were used to assess student achievement on approximately 30 curriculum objectives and to provide information about some topics that were taught in traditional classrooms but not in experimental classrooms.

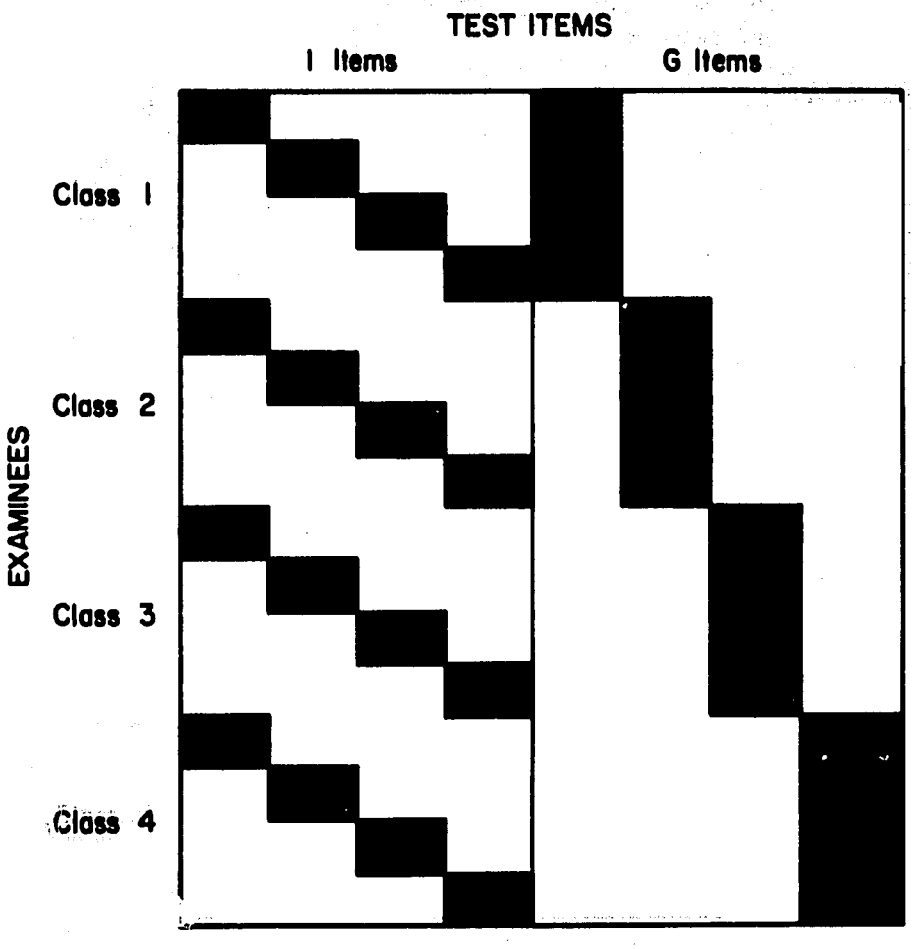

Figure 9-1. Matrix-sampling design of achievement test.

The test was administered to 323 experimental, 195 traditional, and 242 Granada students in early November, the end of the school year. The number of students responding to each item ranged from 40 to 90. Item scores for experimental and traditional students are presented in Table G of Appendix A.

In reporting the results of the test we first examine the extent to which experimental students attained the objectives of the curriculum. Scores summarized by individual strands for minimal and advanced objectives are shown in Table 9-7. Minimal objectives (see Chapter 5) were defined as those objectives for which the Project expected performance levels of 75 to 85 percent correct; performance levels for advanced objectives were expected to be lower. On the average, performance levels were within expectations for fractions, addition, and applications, slightly low for numeration, and very low for subtraction. (Measurement, with only a single item, was not adequately tested.)

Table 9-7

Attainment of Minimal and Advanced Objectives by 1975 First-grade Experimental Students

	Minimal objectives		Advanced objectives	
Strand	Number of items	Mean percentage correct	Number of items	Mean percentage correct
Numeration	12	74.3	10	63.1
Fractions	4	76.7		
Addition	19	76.9		
Subtraction	12	62.5		
Measurement	1	94.3		
Applications	12	83.3	3	61.2

We think the poor performance on subtraction can be attributed to a deficiency in the amount of practice provided. Only about 60 percent as much time was spent on subtraction as on addition (see Table 5-3, which gives the distribution of lesson segments among strands). We also believe that we can improve upon the sequence of exercises that was adopted for teaching subtraction. A major

revision task will be to teach subtraction more effectively. Although performance was at an acceptable level in other topics, we think it could be improved by condensing the material presented at the beginning of the year and increasing the amount of practice in more advanced topics.

A comparison of the performance of experimental and traditional students is shown in Table 9-8, which summarizes item scores by topic. Of the 16 topics listed, 13 were taught in experimental classrooms and 15 were taught in traditional classrooms. Project lessons did not teach multiplication, geometry, or completing equations. Completing equations was not part of the traditional program either. It is, however, a standard topic in first-grade mathematics programs in the United States. We had intended to include it as a topic for the radio lessons; we did not, but tested it nevertheless.

Students in experimental classrooms achieved higher scores than those in traditional classrooms on all topics taught by Project lessons. As shown in Table 9-8, the differences ranged from 5 to 24 percentage points. The traditional students attained higher scores for two of the three remaining topics, but neither group performed acceptably.

In Chapter 8 we described the informal experiment carried out in the Department of Granada to test the use of Project materials without direct supervision from Project personnel. The six participating classes were given the posttest. Table 9-9 presents the mean item scores for students from experimental, traditional, and Granada classrooms. The difference between mean item scores of the experimental and traditional classes, in favor of the experimental, is significant ($t = 3.45$, $p < .005$). The Granada students performed at the same level as the experimental students.

Oral Arithmetic Skills

In examining the results of the 1974 first-grade achievement test we were surprised to note that performance on word problems presented orally was quite high. For example, the highest percentage correct for a

Table 9-8

Comparison of Scores of Experimental and Traditional Students by Topic, 1975

Topic	Number of items	Mean percentage correct		
		Experimental	Traditional	Difference
Numeration	22	69.2	59.8	9.4
Fractions	4	76.7	53.5	23.2
Oral addition	6	84.9	61.1	23.8
Vertical addition	8	74.0	52.6	21.4
Horizontal addition	6	71.8	60.6	11.2
Oral subtraction	4	72.7	55.3	17.4
Vertical subtraction	7	50.2	31.2	19.0
Horizontal subtraction	3	53.6	49.0	4.6
Money	7	80.0	66.7	13.3
Time	1	64.6	52.2	12.4
Length	1	94.3	72.5	21.8
Oral problems	7	79.8	73.5	6.3
Basic concepts	3	87.4	82.5	4.9
Geometry	1	52.2	59.5	-7.3
Completing equations	6	29.1	22.5	6.6
Multiplication	2	20.5	35.4	-14.9

Table 9-9

1975 Posttest Performance—Item Scores

Group	n	Percentage correct: Mean	Percentage correct: Standard deviation
Experimental	88	67.3	23.8
Traditional	88	55.5	21.4
Granada	88	68.4	25.1

written addition exercise was about 60, while the highest for an oral word problem using addition was 71 percent. In fact, oral word problems requiring addition were all easier than any of the written addition exercises.

The results of the 1974 test also indicated that students did better on computation exercises presented orally than on written exercises. In the 1975 posttest we examined this question further. As shown in Table 9-10, there is a tendency for the difficulty level to increase from oral to horizontal to vertical presentation. Although the overall performance level for experimental students was higher, the trend was the same for both groups of students. Table 9-11 compares performance on computation exercises and word problems, both presented orally. For traditional students, the word problems were easier. The difference between the two types of exercises disappears for experimental children, whose performance overall is higher. It seems clear from even these fragmentary results that these children are not translating the facts of a word problem into a computation exercise before solving the problem.

Table 9-10

Comparison of Performance on Related Oral and Written Items: Traditional and Experimental Students, 1975

Exercise		Percentage correct	
Type	Content	Traditional	Experimental
Oral	30 + 4	67.5	80.7
Written, horizontal	90 + 5	55.6	65.4
Written, vertical	25 + 3	26.5	53.7
Oral	5 - 1	68.9	88.6
Written, horizontal	7 - 3	64.6	60.0
Written, vertical	8 - 6	42.9	59.8

The lower difficulty level of oral exercises as compared with written is also interesting. Once again, we can only speculate. Children come to school with good facility with verbal language, while their ability to handle written symbols is rudimentary. There is probably a close correspondence between the spoken language of the children and the internal language that is processed, while written symbols must be translated to internal language, probably through spoken language. Thus, to process an arithmetic exercise presented orally requires one less step (and a very difficult step at that) than responding to the same exercise in written form. Of course, when a child is given an oral exercise he must store the components of the exercise in his memory. On the other hand, he is saved the task of decoding the printed symbol. As exercises become more complicated, either because the numbers become larger or because the number of operations increases, the memory load becomes greater, and processing an oral exercise becomes more difficult. At the same time, as the child matures, his

Table 9-11

Comparison of Performance on Oral Computation Exercises and Oral Word Problems: Traditional and Experimental Students, 1975

Exercise type	Percentage correct	
	Traditional	Experimental
Computation		
2 + 5	57.1	96.7
7 + 4	57.5	84.1
8 + 7	55.2	72.3
5 - 1	68.9	88.6
9 - 4	66.7	86.7
Mean	61.1	85.7
Computation required by word problem		
5 + 5	75.0	88.6
3 + 6	55.6	84.8
8 - 2	85.1	93.9
6 - 4	91.0	92.3
10 - 6	70.0	83.0
Mean	75.3	88.5

decoding skills improve. There should therefore be some point at which, for the typical exercise appropriate for his grade level, the performance decrement due to increased memory load is greater than the performance decrement due to the difficulty of decoding; written exercises then become easier than oral exercises. We suspect that this point comes sometime in the second grade.

The results and our speculations suggest to us that for first grade, and perhaps for part of second grade, we can help children acquire arithmetic skills by greatly increasing the oral component of the teaching process, capitalizing on their superior verbal skills while we slowly help them to build decoding skills. For this purpose radio may turn out to be a useful tool.

Interviews with Teachers

At the end of the school year the teachers in experimental classrooms were interviewed concerning their participation in the Project. Fifty-eight percent of the teachers said they enjoyed teaching mathematics more with radio than without, and 73 percent felt that the children learned more during 1975 than during the previous year. The majority (59 percent) thought their work load was reduced by using radio lessons. The teachers were asked what they thought was the major benefit of working with the Project. Among the responses were (a) children worked better (32 percent), (b) use of worksheet and materials was helpful (28 percent), (c) teachers acquired new teaching experiences (20 percent), (d) teachers observed better teaching techniques (16 percent), and (e) lesson presentations were clearer (4 percent). When asked to cite the major difficulty the experienced, 42 percent said there were no problems. The remainder mentioned problems, but the responses were quite diversified; for example: (a) adaptation to a new method was difficult, (b) some mathematics lessons were lost because of failure of the tape recorder, (c) some of the worksheets were not printed correctly, (d) the slow children had difficulties, (e) the teacher could not attend the training sessions, (f) not

enough mathematics was covered, (g) absenteeism presented problems, and (h) the teacher had to explain parts of some lessons to the children. Ninety-two percent of the teachers said they would recommend the Project lessons to other teachers.

The teachers were asked several questions about how others in the school and the community felt about the Project's lessons. They reported that many questions were asked by other teachers, who expressed curiosity about all aspects of the Project and expressed many doubts about teaching by radio. Among the reasons given for skepticism were: (a) children can not learn from a recording, (b) there are too many games--too few individual activities, (c) lessons can not be repeated, and (d) they require too much work for the teacher. There were some indications that the teachers, feeling freer to attribute these opinions to others, were expressing some of their own doubts. As with the direct criticisms cited above, there was little consensus about these negative reactions.

Almost all the teachers (95 percent) reported having talked with at least some of the parents about the radio lessons. About a third of the teachers said they met with parents in groups, others saw parents individually. According to the teachers, the response of the parents was overwhelmingly positive. The major concern expressed by the parents was the lack of homework in mathematics and most teachers (90 percent) agreed that children should have homework. In addition, the teachers thought the Project should make more effort to communicate directly with the parents through meetings (38 percent), radio broadcasts (25 percent), a bulletin for parents (21 percent) and other means.

The teachers were asked for which ability group in their class were the lessons most adequate. Their replies were: top, 22 percent; middle, 61 percent; bottom, 17 percent. Approximately two-thirds thought that failure of the slow group to understand was a more significant problem than that lessons were not sufficiently advanced for the fast group.

The teachers had several suggestions for improving the program. They thought more materials should be used during the broadcast, that more varied activities should

be suggested for the postbroadcast period, that multiplication and division should be included in the curriculum, and that the Project staff should help them grade the children.

Summary Findings

We conclude with an overall view of the more important findings from our work during the first two years of the Project. We have divided these summary findings into three groups. The first deals with the characteristics of radio lessons; the second deals with general findings about the mathematics learning capabilities of first-grade children in Nicaragua; and the final group deals with our conclusions of a more general nature.

Radio Lessons

During the experimental work of 1974 and 1975 the Project developed a successful lesson format that had two parts, the radio portion and the postbroadcast portion. The main characteristics of the radio portion were the following:

1. A radio lesson consisted of segments, and each segment was independent of the others. Each segment had as its main purpose either instruction or entertainment.
2. All instructional segments required active responses from the students. Most entertainment segments similarly required active responses.
3. A high response rate, averaging three responses per minute, was maintained throughout the lesson.
4. The instructional segments of a lesson were drawn from different topics and required different types of responses.
5. All instructional segments consisted of exercises requiring responses from the children.

6. The correct answer was given for each exercise after the children had the opportunity to respond.
7. Transitions between segments were short, simple, and often nonverbal.

Mathematics Learning

Among the most significant findings about the capabilities of first-grade children were the following:

1. Children are able to learn new mathematical concepts and skills from instruction given by radio and supplemented by a worksheet.
2. Children remain attentive and responsive for a half-hour radio lesson, provided they have the opportunity to respond frequently.
3. Children are able to respond at the high rate of three to four times a minute.
4. Children are able, with adequate directions, to keep their place on a worksheet that has up to 30 different displays or locations for responding.
5. Children can work with concrete materials, such as bottle caps, during a radio lesson.
6. Children enjoy the instructional portions of the lessons. Althought the entertainment portions provide a change of pace, they are not necessary for maintaining the children's attention.

General findings

Our final remarks concern some of our conclusions about using radio for instructional purposes, the problems of teaching children who are thought to have rather restricted backgrounds, and some comparisons between children in California and in rural Nicaragua.

1. We initially underestimated the general knowledge of Nicaraguan children. Their performance on tests on initial school entry was considerably higher than we anticipated. Some of this performance may well be a

reflection of the revolutionary role the transistor radio has played in developing countries. It is our experience that massive radio communication networks are in place virtually throughout the world and we know little about their effects on the knowledge and experience of young children.

2. On the other hand, we tended to overestimate the formal skills of the children on entry into school. We suspect that the experience of both underestimating general knowledge and overestimating formal skills is a common tendency in appraising students from rural backgrounds in many parts of the world. We also suspect that to some extent similar estimation errors are made by curriculum specialists working in highly developed metropolitan environments.

3. We anticipated significant differences in performance between rural and urban children and we were somewhat surprised to find them absent from our data. It would be desirable to know to what extent this conclusion holds for more remote rural populations in Nicaragua and, in a more general way, for urban and rural populations in other parts of the world.

4. As time has passed we have become more impressed with what we take to be the universal character of the results. We remarked earlier on the relative uniformity of mathematics textbook material throughout the world. Our work thus far indicates that not only the curriculum, but also children's learning of elementary mathematics, is extraordinarily similar from California to Nicaragua. We suspect that this is generally true and that the learning of mathematics is more uniform than any other subject that is formally taught in schools.

5. Although the authors began this Project with an extensive background in elementary mathematics curriculum, they did not have a similar background of experience in teaching by radio. We are pleased to report that during the initial period of this Project we have moved from uncertainty to confidence in radio as a medium for elementary mathematics instruction.

APPENDIX A: DATA TABLES

Table A

Content of Nicaragua Pilot Lesson Segments

Lesson & segment	Strand	Presentation[a] mode	Description
L1-1	NUM	O	Mando-mando game
L1-2	NUM	O	Counting aloud
L1-3	NUM	O	Counting sounds
L1-4	NUM	W	Number dictation
L1-5	NUM	O	Successors
L1-6	APL	O	Days of the week
L1-7 P[b]	GEO	O	Comparing lengths
L1-8 P	NUM	O	Mando-mando game
L2-1	NUM	O	Mando-mando game
L2-2	NUM	O	Counting aloud
L2-3	APL	O	Comparing lengths
L2-4	BAS	W	Identifying common objects
L2-5	NUM	W	Number dictation
L2-6	NUM	O	Successors
L2-7	BAS	W	Identifying common objects
L2-8 P	APL	W	Measuring with rulers
L3-1	NUM	O	Mando-mando game
L3-2	NUM	O	Counting aloud
L3-3	NUM	O	Counting sounds
L3-4	BAS	W	Identifying common objects
L3-5	NUM	O	Successors
L3-6	NUM	W	Successors
L3-7	GEO	W	Circling longest, shortest
L3-8 P	APL	W	Measuring with rulers
L4-1	NUM	O	Mando-mando game
L4-2	GEO	W	Circling longest, shortest
L4-3	NUM	O	Successors
L4-4	NUM	W	Successors
L4-5	BAS	W	Identifying common objects

[a]W = written, O = oral.

[b]P = presented after the taped lesson (postbroadcast).

(Table A, cont.)

Lesson & Segment	Strand	Presentation mode[a]	Description
L4-6	GEO	W	Drawing longer, shorter lines
L4-7 P	APL	W	Measuring with rulers
L4-8 P	APL	O	Comparing lengths
L5-1	NUM	O	Mando-mando game
L5-2	NUM	O	Counting aloud
L5-3	APL	O	Comparing coins
L5-4	APL	W	Identifying coins
L5-5	ADD	O	Story problems--addition
L5-6	ADD	O	Mental arithmetic
L5-7	ADD	W	Mental arithmetic
L5-8 P	APL	W	Measuring with rulers
L5-9 P	APL	W	Drawing lines of given length
L6-1	NUM	O	Counting aloud
L6-2	ADD	O	Mental arithmetic
L6-3	ADD	W	Mental arithmetic
L6-4	APL	W	Comparing coins
L6-5	APL	O	Comparing coins
L6-6	APL	W	Story problems--money
L6-7 P	APL	W	Giving value of coins

APPENDIX A

Table B

1974 Pilot Test Results by Item

Item identifier[a]	Strand[b]	n	Percentage correct
A1	NUM	91	94.5
A2	NUM	91	93.4
A3	NUM	91	63.7
A4	NUM	91	39.6
A5	SUB	91	52.7
A6	APL	91	75.8
A7	ADD	91	54.9
A8	SUB	91	24.2
A9	ADD	91	58.2
A10	SUB	91	27.5
B1-1	NUM	41	87.8
B1-2	NUM	41	46.3
B1-3	NUM	41	39.0
B1-4	ADD	41	43.9
B1-5	DIV	41	22.0
B1-6	APL	41	14.6
B1-7	APL	41	63.4
B1-8	NUM	41	65.9
B1-9	APL	41	41.5
B1-10	NUM	41	17.1
B2-1	GEO	50	92.0
B2-2	NUM	50	86.0
B2-3	NUM	50	72.0
B2-4	NUM	50	50.0
B2-5	NUM	50	22.0
B2-6	APL	50	20.0
B2-7	NUM	50	52.0
B2-8	NUM	50	78.0
B2-9	APL	50	84.0
B2-10	NUM	50	58.0

[a] Test items came from forms A, B1, B2, C1, C2, C3, C4, and C5. Items are numbered consecutively within each form.

[b] Strand abbreviations are:

ADD	Addition	MUL	Multiplication
APL	Applications	NUM	Number concepts
DIV	Division	SUB	Subtraction
GEO	Geometry		

(Table B, cont.)

Item identifier[a]	Strand[b]	n	Percentage correct
C1-1	NUM	17	64.7
C1-2	APL	17	5.9
C1-3	ADD	17	23.5
C1-4	ADD	17	35.3
C1-5	MUL	17	35.3
C1-6	MUL	17	29.4
C1-7	GEO	17	11.8
C1-8	SUB	17	11.8
C1-9	ADD	17	0.0
C1-10	SUB	17	11.8
C2-1	NUM	18	5.6
C2-2	GEO	18	44.4
C2-3	ADD	18	50.0
C2-4	SUB	18	27.8
C2-5	SUB	18	22.2
C2-6	DIV	18	0.0
C2-7	SUB	18	22.2
C2-8	ADD	18	5.6
C2-9	MUL	18	22.2
C2-10	ADD	18	0.0
C3-1	NUM	18	11.1
C3-2	APL	18	27.8
C3-3	NUM	18	66.7
C3-4	SUB	18	16.7
C3-5	MUL	18	38.9
C3-6	MUL	18	22.2
C3-7	NUM	18	16.7
C3-8	MUL	18	5.6
C3-9	NUM	18	5.6
C3-10	SUB	18	0.0
C4-1	NUM	20	45.0
C4-2	APL	20	5.0
C4-3	NUM	20	70.0
C4-4	SUB	20	50.0
C4-5	SUB	20	30.0
C4-6	DIV	20	20.0
C4-7	DIV	20	0.0
C4-8	SUB	20	5.0
C4-9	SUB	20	0.0
C4-10	SUB	20	0.0
C5-1	NUM	18	33.3
C5-2	APL	18	22.2

(Table B, cont.)

Item identifier[a]	Strand[b]	n	Percentage correct
C5-3	ADD	18	55.5
C5-4	SUB	18	33.3
C5-5	MUL	18	22.2
C5-6	MUL	18	11.1
C5-7	ADD	18	50.0
C5-8	ADD	18	22.2
C5-9	ADD	18	5.6
C5-10	ADD	18	5.6

Table C

1974 Achievement Test Results by Item[a]

Item identifier	Strand	n	Percentage correct
A1	NUM	1241	80.82
A2	NUM	1241	71.64
A3	NUM	1241	41.98
A4	NUM	1241	76.87
A5	NUM	1241	79.37
A6	SUB	1241	49.80
A7	ADD	1241	50.52
B1-1	NUM	246	91.46
B1-2	ADD	246	45.93
B1-3	APL	246	65.85
B1-4	NUM	245	55.10
B1-5	GEO	245	96.33
B1-6	NUM	245	27.76
B1-7	SUB	245	25.71
B2-1	NUM	265	87.55
B2-2	SUB	265	60.00
B2-3	APL	265	70.19
B2-4	NUM	265	40.00
B2-5	GEO	265	98.87
B2-6	NUM	265	79.25
B2-7	SUB	265	23.77
B3-1	NUM	223	84.75
B3-2	ADD	223	67.71
B3-3	APL	223	71.30
B3-4	NUM	220	80.45
B3-5	GEO	223	95.96
B3-6	NUM	223	38.12
B3-7	SUB	223	7.62
B4-1	NUM	240	73.75
B4-2	SUB	240	43.33
B4-3	APL	240	49.58
B4-4	NUM	239	82.85
B4-5	GEO	240	80.83
B4-6	NUM	240	41.25
B4-7	SUB	239	25.10

[a]Item descriptions are in Appendix B.

(Table C, cont.)

Item identifier	Strand	n	Percentage correct
B5-1	NUM	267	66.67
B5-2	ADD	267	50.94
B5-3	APL	267	52.43
B5-4	NUM	266	37.59
B5-5	GEO	267	73.03
B5-6	NUM	263	64.26
B5-7	MUL	267	26.22
C1-1	NUM	248	41.94
C1-2	APL	248	31.05
C1-3	NUM	248	47.98
C1-4	APL	248	37.50
C1-5	ADD	248	60.48
C1-6	SUB	248	35.48
C1-7	MUL	248	25.00
C2-1	NUM	255	18.43
C2-2	APL	255	36.08
C2-3	NUM	255	56.47
C2-4	APL	255	38.82
C2-5	ADD	255	47.45
C2-6	SUB	255	28.24
C2-7	ADD	255	11.76
C3-1	NUM	243	16.46
C3-2	APL	243	5.35
C3-3	NUM	243	60.08
C3-4	APL	243	2.88
C3-5	ADD	243	27.57
C3-6	MUL	243	43.62
C3-7	SUB	243	35.80
C4-1	NUM	246	49.59
C4-2	APL	246	40.24
C4-3	NUM	246	47.97
C4-4	APL	246	56.10
C4-5	ADD	246	47.97
C4-6	ADD	246	41.87
C4-7	SUB	246	31.71
C5-1	NUM	249	20.88
C5-2	APL	249	35.74
C5-3	NUM	249	36.14
C5-4	APL	249	8.84
C5-5	ADD	249	47.39
C5-6	MUL	249	38.55
C5-7	SUB	249	21.69

Table D

Class Means on 1974 Achievement Test Using Total Scores Estimated by Kleinke Procedure

Class	Region[a]	n	Mean	Standard deviation
1	U	31	42.42	11.23
2	U	37	44.32	9.33
3	U	36	38.81	12.05
4	U	28	41.29	11.93
5	U	31	32.42	12.41
6	U	31	31.94	11.46
7	U	27	34.07	11.99
8	M	33	30.79	12.75
9	M	27	35.19	14.05
10	R	22	33.32	11.45
11	U	32	36.88	12.74
12	M	27	44.44	11.08
13	M	28	42.00	10.74
14	U	27	32.04	13.19
15	R	13	23.46	10.13
16	R	34	30.53	13.64
17	U	21	35.24	12.25
18	R	29	38.07	12.17
19	R	19	24.16	10.40
20	M	41	33.95	12.40
21	R	16	33.75	9.95
22	R	38	37.26	14.17
23	M	24	30.50	12.21
24	M	28	44.18	12.27
25	M	45	38.56	12.51
26	M	33	28.70	10.35
27	R	22	40.59	11.18
28	M	24	37.71	11.25
29	R	41	36.34	11.00
30	R	29	35.45	11.71
31	U	22	41.46	11.64
32	U	33	40.42	10.08
33	U	14	44.00	10.47

Note. Classes 1-30 were selected randomly.

[a]U = urban, M = municipal, R = rural.

[b]"Radio" classes were used to try out pilot lessons.

THE RADIO MATHEMATICS PROJECT

Table E

Test Items for 1975 TOBE[a]

Item	Concept	Text
1	Other basic concept	"Mark the bottle that is empty."
2	Numeration	"Mark the square that has most bottles."
3	Geometry	"Mark the figure that is pointed."
4	Geometry	"Mark the straight line."
5	Numeration	"Mark the square that has less than three figures."
6	Geometry	"Mark the square that has only round things."
7	Fractions	"Mark the figure that has two equal parts."
8	Numeration	"Mark the cake that has four candles."
9	Numeration	"Mark the square that has a pair of shoes."
10	Time	"Mark the clock that has both hands up."
11	Geometry	"Mark the figure that has corners."
12	Numeration	"Mark the square that has six things."
13	Weight	"Mark the one that can carry the most."
14	Numeration	"Mark the square with the most small balls."
15	Time	"Mark the clock with the large hand."
16	Other basic concept	"Mark the square with the coins that are equal."
17	Numeration	"Mark the number that tells how many eyes people have."
18	Length	"Mark the ruler."
19	Other basic concept	"Mark the fruit that is whole."

[a]Translated from Spanish.

(Table D, cont.)

Class	Region[a]	n	Mean	Standard deviation
34	U	30	40.07	13.62
35	R	36	41.19	12.43
36	M	21	33.52	11.82
37	U-Radio[b]	25	37.48	12.64
38	R-Radio	25	41.08	11.72
39	M-Radio	24	38.00	11.85
40	R-Radio	32	43.25	10.62
41	U-Radio	29	47.24	11.39
42	M-Radio	22	30.50	10.09
43	U	35	34.29	12.62
44	R	19	41.68	13.74

(Table E, cont.)

Item	Concept	Text
20	Size	"Mark the square where all the fruit is the same size."
21	Numeration	"Mark the square that has six baseballs."
22	Weight	"Mark the boy that weighs the most."
23	Numeration	"Mark the square that has three balls on each side of the line."
24	Ordinals	"Mark the second rooster."
25	Length	"Mark the longest rope."
26	Size	"Mark the biggest coin."
27	Numeration	"Mark the bottle that has the most beans."
28	Fractions	"Mark the fruit that is cut in half."

Table F

Performance of Experimental and Traditional Students on TOME, 1975 Administration

Item number	Percentage correct		
	Experimental students	Traditional students	All students
1	82.18	79.78	81.38
2	87.24	90.26	88.25
3	91.74	93.63	92.38
4	86.87	90.64	88.13
5	61.73	64.04	62.50
6	80.11	83.52	81.25
7	45.22	52.81	47.75
8	90.62	93.63	91.63
9	75.98	83.15	78.38
10	51.78	58.05	53.88
11	69.23	79.03	72.50
12	82.55	94.38	86.50
13	78.61	79.40	78.88
14	85.37	87.64	86.13
15	90.06	95.13	91.75
16	51.22	60.67	54.38
17	3.94	6.74	4.88
18	82.36	84.64	83.13
19	89.12	92.51	90.25
20	72.98	82.02	76.00
21	76.17	80.15	77.50
22	96.81	97.75	97.13
23	58.16	69.66	62.00
24	40.90	50.56	44.13
25	45.22	46.44	45.63
26	87.24	94.38	89.63
27	87.24	90.26	88.25
28	36.21	44.57	39.00

APPENDIX A

Table G

Performance of Experimental and Traditional Students on 1975 First-Grade Achievement Test

Item[a]	Percentage correct: Experimental	Percentage correct: Traditional	Description of exercise
1-A	92.3	77.6	Which has more (8, 12, 10)
1-B	91.1	76.7	Write the number 42
1-C	88.6	68.9	Oral subtraction, 5 - 1
1-D	87.5	90.0	Circle the widest bench (2 choices)
2-A	67.7	76.1	What number comes after 13
2-B	85.6	60.5	Circle the fraction one-half (1/4, 2/3, 1/2, 1/3)
2-C	82.3	80.0	Which has fewer (10, 12, 8)
2-D	88.6	75.0	Oral word problem, 5 + 5
3-A	93.5	91.0	Circle the 50-cent coin
3-B	94.4	76.7	Circle the third boy (in a line)
3-C	94.9	82.2	Circle eighty-two (28, 82, 72, 27)
3-D	87.5	75.0	Circle the figure divided in halves
4-A	93.9	85.1	Oral word problem, 8 - 2
4-B	96.7	58.1	Oral addition, 2 + 5
4-C	98.7	88.9	Count the men without hats (3 with, 5 without)
4-D	84.1	57.5	Oral addition, 7 + 4
5-A	62.1	41.8	Circle the figure divided into fourths
5-B	98.9	90.7	Circle the 5-cordoba bill (3 choices)
5-C	84.8	53.6	Oral word problem, 3 + 6
5-D	54.6	47.5	Circle the smallest number (41, 38, 36)
6-A	92.4	91.0	Oral word problem, 6 - 4
6-B	81.1	37.2	Write the number that comes before 14
6-C	97.5	89.9	Circle the 50-cordoba bill
6-D	80.7	67.5	Oral addition, 30 + 4
7-A	69.[illegible]	70.2	Write the number that comes after 85
7-B	9[illegible].2	67.4	5 + 7 = ____
7-C	81.0	57.8	Oral addition, 23 + 1
7-D	54.6	42.5	Write the number that comes after 59

[a]Starred items were not taught by RMP curriculum. Items labeled A-D are G-items, those labeled I-IV are I-items.

(Table G, cont.)

Item[a]	Percentage correct: Experimental	Percentage correct: Traditional	Description of exercise
8-A	51.5	50.8	Circle the largest (43, 47, 51)
8-B	94.4	72.1	Oral addition, 2 + 1 + 3
8-C	72.2	37.8	Circle the figure divided into thirds
8-D	46.6	25.0	Write the number that comes before 40
9-A	72.7	55.2	Oral addition, 8 + 7
9-B	86.7	67.4	Oral subtraction, 9 - 4
9-C	62.0	44.4	Write the number that comes before 36
9-D	85.2	87.5	Circle the word four (3 choices)
10-A	65.2	52.2	What time does the clock say? (8)
*10-B	52.2	60.5	Circle the triangle (3 choices)
10-C	36.7	62.2	Write the word eight
10-D	94.3	72.5	Measuring - pencil and cm ruler (8 cm)
11-A	53.0	43.3	Oral subtraction, 54 - 1
11-B	78.9	67.4	Oral word problem, 3 x 3
11-C	63.3	42.2	Oral subtraction, 45 - 5
11-D	83.0	70.0	Oral word problem, 10 - 6
*12-A	27.3	22.4	Oral noncanonical form, 5 - ___ = 2
12-B	40.0	72.1	Oral word problem, 6 divided by 2
*12-C	5.1	11.1	Oral noncanonical form, ___ + 4 = 6
*12-D	8.0	12.5	Oral noncanonical form, ___ + 3 = 5
13-I	61.0	55.1	Count the balls (32)
13-II	73.4	61.5	Count the balls (24)
13-III	83.8	83.7	Count the balls (15)
13-IV	95.1	91.1	Count the balls (7)
14-I	50.0	20.4	How much money is shown? (50 cents, 10 cents, 5 cents)
14-II	60.8	61.5	How much money is shown? (25 cents)
14-III	76.3	53.1	How much money is shown? ($5, $1, $1, $1)
14-IV	78.1	62.2	How much money is shown? ($5)
15-I	37.8	12.2	Fill in the missing number (4, 6, ___, 10)
15-II	30.4	36.5	Fill in the missing number (5, 10, ___, 20)
15-III	70.0	51.0	Fill in the missing number (50, 60, ___, 80)
15-IV	82.9	57.8	Fill in the missing number (83, 84, ___, 86)

(Table G, cont.)

Item[a]	Percentage correct: Experimental	Percentage correct: Traditional	Description of exercise
16-I	87.8	67.4	3 + 2
16-II	68.4	57.7	3 + 9
16-III	80.0	75.5	3 + 4
16-IV	87.8	57.8	8 + 0
17-I	59.8	42.9	8 - 6
17-II	76.0	40.4	9 - 0
17-III	60.0	63.3	7 - 3
17-IV	73.2	42.2	4 - 4
18-I	78.1	65.3	5 2 + 2
18-II	40.5	48.1	64 + 1
18-III	77.5	67.4	6 + 5
18-IV	75.6	77.8	1 + 4 + 3
19-I	53.7	26.5	25 + 3
*19-II	27.9	40.4	14 - 7
*19-III	26.3	22.5	13 - 9
19-IV	64.6	55.6	90 + 5
20-I	64.6	34.7	16 + 32

(Table G, cont.)

Item	Percentage correct: Experimental	Percentage correct: Traditional	Description of exercise
20-II	39.2	32.7	96 − 72
20-III	50.0	40.8	35 − 13
20-IV	79.3	44.4	41 + 36
*21-I	20.7	20.4	5 × 2
*21-II	20.3	50.0	4 × 2
21-III	46.3	28.6	53 − 2
21-IV	45.1	8.9	68 − 5
*22-I	42.7	26.5	7 − ___ = 6
*22-II	69.6	38.5	32 15 + 50
*22-III	21.3	32.7	___ + 2 = 5
*22-IV	15.9	28.9	2 + ___ = 3

APPENDIX B: ITEM DESCRIPTIONS, 1974 FIRST-GRADE ACHIEVEMENT TEST[a]

Question number	Item identifier	Printed component	Oral component
1	A1	13 cats, 7 white and 6 black	"Count the white cats."
2	A2	2 bags of caramels, one containing 17 caramels, the other containing 15	"Circle the bag that has the fewest caramels."
3	B1-1	_____	"Write the number 7"
	B2-1	_____	" " " 40
	B3-1	_____	" " " 15
	B4-1	_____	" " " 200
	B5-1	_____	" " " 53
4	B1-2	_____	"How much is 8 + 4?"
	B2-2	_____	" " " 6 - 3
	B3-2	_____	" " " 5 + 1
	B4-2	_____	" " " 28 - 2
	B5-2	_____	" " " 20 + 7
5	C1-1	30 40 50 __ __	"Read the numbers carefully. Write the numbers that are missing."
	C2-1	2 4 6 __ __	"
	C3-1	5 10 15 __ __	"

[a] Translated from Spanish.

Question number	Item identifier	Printed component	Oral component
	C4-1	72 73 74 __ __	"Read the numbers carefully. Write the numbers that are missing."
	C5-1	8 7 6 __ __	"
6	A3	2 coins, 50 cents and 5 cents. Multiple choice: 50, 55, 45 cents	"Circle the number that tells how much the two coins together are worth."
7	B1-3	_____	"Maria had 3 hair ribbons. Her mother gave her 2 more. Write the number of ribbons that Maria has now."
	B2-3	_____	"Martha gave 3 bananas to the teacher. Jose gave her 2 and Miguel 2. Write the number of bananas that the teacher received."
	B3-3	_____	"Manuel had 4 buttons to play with. Playing with another boy he lost 3. Write the number of buttons he has left."
	B4-3	_____	"I have 2 boxes. In each box there are 4 dolls. Write the number of dolls that I have."
	B5-3	_____	"Mama has 6 hens. She divides them between her two children. Write the number of hens she gives to each child."
8	B1-4		"Circle the figure that is divided into halves."
	B2-4		"Circle the figure that is divided into halves."

APPENDIX B

Question number	Item Identifier	Printed component	Oral component
	B3-4		"Circle the figure that is divided into fourths."
	B4-4		"Circle the figure that is divided into halves."
	B5-4		"Circle the figure that is divided into thirds."
9	C1-2	Juan had 5 mangos. He ate 2. How many mangos does he have now? 3 10 7	"Read this problem carefully. Circle the correct answer."
	C2-2	Nina bought 6 oranges. Her mama gave her 1 more. How many oranges does Nina have now? 6 7 5	"
	C3-2	Maria has 6 caramels. Pedro has 5. Maria has more. How many more? 11 3 1	"
	C4-2	Dora has 4 dahlias and 2 roses. How many flowers does Dora have? 2 6 8	"
	C5-2	Eva has 3 toys. Manolo has 3 others. How many toys do they have between the two of them? 6 9 3	"

Question number	Item identifier	Printed component	Oral component
10	C1-3	80 73 91	"Circle the smallest number."
	C2-3	52 57 59	"
	C3-3	4 3 5	"
	C4-3	284 247 231	"
	C5-3	63 51 47	"
11	B1-5	House and 4 dogs	"Circle the dog that is closest to the house."
	B2-5	3 ladders of different sizes	"Circle the longest ladder."
	B3-5	3 trees of different sizes	"Circle the smallest tree."
	B4-5	Nest with 4 birds flying around it	"Circle the bird that is flying above the nest."
	B5-5	2 glasses	"Circle the glass that is on the right."
12	B1-6	_____	"Write the number that comes before 30."
	B2-6	_____	. . . after 29.
	B3-6	_____	. . . before 58.
	B4-6	_____	. . . before 46.
	B5-6	_____	. . . before 8.
13	A4	5 boys waiting in line to buy tickets to the circus.	"Circle the third boy in line."
14	A5	FIFTY FIFTEEN FOURTEEN FOUR	"Circle the word 'fourteen'."

APPENDIX B

Question number	Item identifier	Printed component	Oral component
15	C1-4	clock showing 6:00	"Write the hour the clock says."
	C2-4	" " 4:00	"
	C3-4	" " 10:30	"
	C4-4	" " 12:00	"
	C5-4	" " 2:30	"
16	C1-5	4 + 3	"Read each exercise carefully and write the correct answer."
	C2-5	24 21 + 41	"
	C3-5	30 + 4	"
	C4-5	6 + 10 = ___	"
	C5-5	9 + 5	"
17	A6	5 - 3 = ___	"
18	A7	160 + 530	"
19	C1-6	6 - 0 = ___	"
	C2-6	13 - 8 = ___	"
	C3-6	2 x 5 = ___	"
	C4-6	3 + 0 = ___	"
	C5-6	5 x 1	"

THE RADIO MATHEMATICS PROJECT

Question number	Item identifier	Printed component	Oral component
20	C1-7	9 × 10 = ___	"
	C2-7	38 + 55	"
	C3-7	84 - 21	"
	C4-7	72 - 1 = ___	"
	C5-7	10 - 7	"
21	B1-7	90 - 10	"Read each exercise carefully and write the correct answer."
	B2-7	94 - 3	"
	B3-7	42 - 5	"
	B4-7	6 - 3 = ___	"
	B5-7	32 x 3	"

APPENDIX C: ADAPTATION OF KLEINKE PROCEDURE FOR ESTIMATING STUDENT SCORES

Matrix sampling has been demonstrated to be a useful method for establishing national test norms (Lord, 1962). Sampling both examinees and items serves to reduce the amount of testing time required of each examinee. Analysis of resultant test data is based on the assumption that the sample of items and the sample of examinees are drawn independently and that responses to an item do not depend on the context in which the item is presented.

Although each examinee receives only a portion of the items on the total test, various investigators have attempted to estimate parameters of the total test distribution of all examinees. Most studies consist primarily of estimates of total-test mean and variance (Owens & Stufflebeam, 1969; Plumlee, 1964). Four studies have included estimates of the total-test distribution (Cook & Stufflebeam, 1967; Lord, 1962; Kleinke, 1972; Bunda, 1973). Lord, Cook, and Stufflebeam fitted a negative hypergeometric distribution to three parameters--an estimated mean, an estimated variance, and the number of items on the total test.

With the exception of Kleinke and Bunda, none of the authors estimates total scores for individuals who were administered partial tests. Bunda estimated total scores from overlapping item samples using a regression equation whose coefficients are found from the item means and the item variance-covariance matrix. The vector of regression weights, b(T,i), for any particular sample is

$$b(T,i) = s(i,j)^{-1}s(T,i) ,$$

where $s(i,j)^{-1}$ is the ij-th element of the inverse of the inter-item variance-covariance matrix, and s(T,i) is the vector of item-total covariances.

Kleinke offered a method for nonoverlapping item samples using a linear prediction approach for generating the estimated total-test distribution. With this approach, the total-test may be considered a composite of two tests, namely X, consisting of the items presented to the student, and Y, the items not presented to the student. The observed score on X is used to predict the score on Y. The predicted total-test score is then the sum of scores on X and Y.

The 1974 achievement test had three parts, A, B, and C (which in the context of the present discussion can be thought of as three separate tests). For each student, the total predicted score is the sum of one observed score (for Part A) and two predicted scores (for Parts B and C). The maximum score for Part A is 7, and for Parts B and C is 35, yielding a total maximum score of 77. Let

T(A) be the observed score on Part A,

T(B) be the predicted score on Part B, and

T(C) be the predicted score on Part C.

Then the total score, T, is the sum of these three,

$$T = T(A) + T(B) + T(C) .$$

Kleinke's method was used to estimate scores for Parts B and C. To obtain T(j), j = B or j = C, let

X be the score on the form the student took,

$\bar{X}$ be the mean score on this form,

S_x be the standard deviation on this form,

$\bar{Y}_t$ be the sum of the means of the other 4 forms, taken as an estimate of the mean of a composite consisting of the other forms,

S_t be the square root of the sum of the 4 variances, taken as an estimate of the standard deviation of the other forms, and

Y' be the total predicted score for the other forms.

Then a student's estimated score on Part j is shown in Equation (1).

$$T(j) = X + Y' = X + \bar{Y}_t + \frac{S_t}{S_x}(X - \bar{X}) . \qquad (1)$$

Equation (1) is obtained from the regression equation for X and Y,

$$Y' = \bar{Y} + r\frac{SY}{SX}(X - \bar{X}) ,$$

where r is the correlation between X and Y. If we assume perfect correlation between X and Y (r = 1), we obtain Equation (1). If we assume no correlation between X and Y (r = 0), then $Y' = \bar{Y}$, and

$$T(j) = X + \bar{Y} . \qquad (2)$$

These two equations yield upper and lower bounds for predicted scores, depending on the value of r and on the sign of $(X - \bar{X})$. (If $X - \bar{X} > 0$, then Equation (1) is the upper bound and Equation (2) the lower bound.)

The means and standard deviations obtained for predicted total-test scores (T) for the 1974 achievement test, calculated using Equations (1) and (2), are shown in Table A.

APPENDIX C

Table A

Means and Standard Deviations for Predicted Total-Test Scores

Equation	Mean	Standard deviation
1	37.61	125.17
2	37.61	23.97

The small variance resulting from the application of Equation (2) reflects the use of only mean scores in the composition of the total-test score.

THE RADIO MATHEMATICS PROJECT

APPENDIX D: LESSON 96 MATERIALS

Radio Script

(translated)

Lesson 96
Grade 1
Version 1

THEME MUSIC UP

FADE TO:

MUSICAL TRANSITION TO *BOMBA (*improvised verse)

DWARF: (announcing with fanfare) Here is a "bomba" just for you kids!

I'm the big-headed dwarf
with the button-nose face,
I bring you, my friends,
a yummy new verse.

MUSIC UP & UNDER

It can at times be very long,
increase and increase
without contraction.
You know me, I know.
Of this I am sure,
for I'm what you call addition.

MUSIC SIGNALING END

FADE TO:

SOUND TRANSITION TO ORAL EXERCISES

FEM. VOICE:

Tinkle bells, tinkle bells,
Listen closely and use your heads.

CARLOS: Children, let's do some exercises. Pay attention.
And don't answer until Lulu says "now." Silently, think:
how much is one plus two plus four? Sh-sh-sh. (PAUSE - 7)

LULU: Now!
(PAUSE - 2)
Yes, seven is the sum of one plus two plus four.

CARLOS: Silently, think: how much is two plus three plus one?
Sh-sh-sh. (PAUSE - 6)

LULU: Now!
(PAUSE - 2)
Correct, six is the sum of two plus three plus one.

CARLOS: Silently, think: how much is four plus one plus two?
Sh-sh-sh. (PAUSE - 7)

LULU: Now!
(PAUSE - 2)
All right, seven is the sum of four plus one plus two.

CARLOS: Think quietly now: how much is five plus two plus one?
Sh-sh-sh. (PAUSE - 8)

LULU: Now!
(PAUSE - 2)
Yes, eight is the sum of five plus two plus one.

CARLOS: Silently think: how much is three plus three plus four?
Sh-sh-sh. (PAUSE - 10)

LULU: Now!
(PAUSE - 2)
Right! Ten is the sum of three plus three plus four.

CARLOS: Silently think: how much is five plus four plus three?
Sh-sh-sh. (PAUSE - 12)

LULU: Now!
(PAUSE - 2)
All right, twelve is the sum of five plus four plus three.

VOICE: Listen, children, just listen.

MUSIC: JINGLE "HOW IMPORTANT IS THE NUMBER TWO" (tape)

VOICE: Now, let's all sing "How Important Is the Number Two."

MUSIC REPEATS

FADES TO:

SOUND TRANSITION TO ORAL EXERCISES REPEATS

APPENDIX D

FEM. VOICE:

Listen! . . . It's time to use your head again.

LULU: Children, let's count now by two's up to twenty. Two . . . four . . . six . . . eight . . . ten . . . twelve . . . fourteen . . . sixteen . . . eighteen . . . twenty.

MUSIC TRANSITION TO JOKES

CLOWN: Listen, children, I'm going to tell you a joke (laughs). Pepito says to his mother:

PEPITO: Mommy, mommy, guess what I have in my hands.

MOM: A yoyo?

PEPITO: No!

MOM: A button?

PEPITO: No!

MOM: Candy?

PEPITO: No!

MOM: Then what?

PEPTIO: My fingers, mommy.

SOUND SIGNAL TO END JOKE

FADE TO:

SOUND TRANSITION TO ORAL EXERCISE REPEATS

CARLOS: Kids, let's go on with the exercises. Tell me, how much is thirty-two minus one? (PAUSE - 2)

LULU: That's it, thirty-one.

CARLOS: How much is twenty-five minus one? (PAUSE - 2)

LULU: Yes, twenty-four. Let's go on.

CARLOS: How much is sixteen minus one? (PAUSE - 2)

LULU: Yes, fifteen.

CARLOS: How much is forty-seven minus one? (PAUSE - 2)

LULU: Right, forty-six.

CARLOS: How much is fourteen minus one? (PAUSE - 2)

LULU: Very good, thirteen.

CARLOS: How much is twenty-eight minus one? (PAUSE - 2)

LULU: Yes, twenty-seven.

CARLOS: How much is twenty minus one? (PAUSE - 2)

LULU: Correct, nineteen.

CARLOS: How much is thirty-six minus one? (PAUSE - 2)

LULU: Yes, thirty-five.

MUSIC TRANSITION TO WORKSHEET

FEM. VOICE (tiny)

Fiddlededee, fiddlededa,
when you hear my bells,
get ready to work,
cause it's the worksheet
I bring yah!

CARLOS: Kids, let's go now to the worksheet, to the first side.
(PAUSE - 3)
Find the flag with the pineapple. In that box look for the number seventy-nine. Put your finger under the seventy-nine. Now tell me, how is seventy-nine written?
(PAUSE - 2)
Yes, with a seven and a nine. Now, circle seventy-nine.
(PAUSE - 7)
Now, move down to the flag with the ball. In that box find the number ninety-nine and put your finger under it. Tell me, how is ninety-nine written?
(PAUSE - 2)
Yes, with a nine and another nine. Now circle ninety-nine.
(PAUSE - 7)
Move down to the flag with the hand. Look for the number forty-four and put your finger under it. Tell me, how is forty-four written?
(PAUSE - 2)
Yes, with a four and another four. Now circle forty-four.
(PAUSE - 7)

Move down to the flag with the house. Find the number one hundred and put your finger under it. How is one hundred written?
(PAUSE - 2)
Very good, with a one, a zero, and another zero. Circle the number one hundred.
(PAUSE - 7)
And lastly, move down to the flag with the pencil. Find the number seventy-seven and place your finger under it. How is seventy-seven written?
(PAUSE - 2)
Yes, with a seven and another seven. Circle the seventy-seven.
(PAUSE - 7)

MUSIC TRANSITION TO JOKE REPEATS

PEPITO: Mommy, mommy, guess what I have in my hands.

MOM: A yoyo?

PEPITO: No!

MOM: A button?

PEPITO: No!

MOM: Candy?

PEPITO: No!

MOM: Then, what?

PEPTIO: My fingers, mommy!

SOUND SIGNALS END

FADES TO:

MUSIC TRANSITION TO WORKSHEET REPEATS

LULU: Let's go back to the worksheet. Put your finger on the block with the bird. Look carefully. That exercise reads: eight minus five. Think quietly: how much is eight minus five.
(PAUSE - 8)
Tell me, how much is eight minus five?
(PAUSE - 2)
Yes, three. Now, write the answer on the dotted line.
(PAUSE - 8)

Move down to the block with the ice-cream cone. That exercise reads: nine minus eight. Think quietly: how much is nine minus eight.
(PAUSE - 9)
Tell me, how much is nine minus eight?
(PAUSE - 2)
That's it, one. Now write that answer on the dotted line.
(PAUSE - 8)
Move down to the block with the cart. That reads: seven minus three. Think quietly: how much is seven minus three.
(PAUSE - 7)
How much is seven minus three?
(PAUSE - 2)
Very good, four. Write the answer on the dotted line.
(PAUSE - 8)
Move down to the block with the machete. That reads: nine minus four. Think quietly: how much is nine minus four.
(PAUSE - 9)
How much is nine minus four?
(PAUSE - 2)
Correct, five. Write the answer on the dotted line.
(PAUSE - 8)
Lastly, move down to the block with the banana. That reads: eight minus six. Think quietly: how much is eight minus six.
(PAUSE - 8)
How much is eight minus six?
(PAUSE - 2)
Very good, two. Write the answer on the dotted line.
(PAUSE - 8)

MUSIC: UP & UNDER

LOBO: Kids, get ready to play. Let's pretend we're carpenters. I'll tell you what to do and you do it.

MUSIC UP & UNDER

The carpenter carries wood. Come on, everybody, make believe you're carrying wood.

MUSIC UP (3) & UNDER

Now, plane the wood.. Everyone, plane the wood.

MUSIC UP (3) & UNDER

Now you're going to saw the wood. Come on, move your hand like you're sawing wood. Come on.

MUSIC UP (3) & UNDER

Now, hammer the wood. Everybody hammer, come on, harder, harder.

MUSIC UP (4)

FADE TO:

DRUM ROLL

FADE TO:

MUSIC TRANSITION TO WORKSHEET REPEATS

CARLOS: Now, let's go back to the worksheet. Let's go to the kites. Find the kite with the shoe. In that box, count the balls and write the number below.
(PAUSE - 12)
Move down to the kite that has a pencil. Right there, draw a line around the circle that's divided into fourths.
(PAUSE - 5)
Move down to the kite with the house. There, circle the number thirty-nine.
(PAUSE - 7)
Move down to the kite with the ice-cream cone. There, write the missing number.
(PAUSE - 7)
And lastly, move down to the kite with the ball. Circle the largest number.
(PAUSE - 7)

MUSIC TRANSITION TO *BOMBAS (*improvised verse)

VOICE: It can at times be very long,
increase and increase,
you know, I know.
Of this I am sure,
for I'm what you call addition.

MUSIC SIGNALING END

FADE TO:

MUSIC TRANSITION TO WORKSHEET REPEATS

LULU: Kids, let's go on working. Turn over the worksheet.
(PAUSE - 3)
Now find the balloon with the banana. In that box, write the number that comes after that one.
(PAUSE - 8)
Let's go to the balloon with the flower. Circle the largest number.
(PAUSE - 8)
Now let's go to the balloon with the hand. Okay, now think: how much is five minus four. Write the answer.
(PAUSE - 12)
Now, to the balloon with the leaf. Write the number that goes before that one.
(PAUSE - 8)
And lastly, let's go to the balloon with the tree. Write the answer to seven minus three.
(PAUSE - 12)

MUSIC TRANSITION TO BOMBAS

DWARF: Bomba for the kids!
The big headed dwarf
jumps up and down
bidding the kids goodbye.
So go on working without
much talking.
And we'll see you the
next time around.

MUSIC SIGNALING END

FADE TO:

MUSIC THEME UP TO TIME

APPENDIX D

Radio Script

Leccion 96
Grado 1
Version 1

TEMA MUSICAL

FUNDE A:

MUSICA: LA GIGANTONA

ENANO CABEZON: (anunciando) ¡Bomba para los ninos!

Soy el enano cabezon,
con la cara de manopla.
Les traigo a todos los ninos,
las mejores de mis coplas.

MUSICA REPITE

Puede a veces ser muy grande
y aumentar con emocion.
Aumenta y aumenta siempre
y se le llama . . . adicion.

MUSICA TERMINAL

FUNDE A:

SONIDO: CAMPANITAS

VOZ FEMENINA:

Campanita, campanita.
Todo el mundo a usar su cabecita.

CARLOS: Ninos, vamos a hacer unos ejercicios. Pongan atencion. Ustedes no contesten hasta que Lulu diga "Ya". Piensen calladitos en cuanto es uno mas dos mas cuatro. Sh-sh-sh. (Pausa - 7)

LULU: ¡YA!
(Pausa - 2)
Si, siete es la suma de uno mas dos mas cuatro.

CARLOS: Piensen calladitos en cuanto es dos mas tres mas uno. Sh-sh-sh.
(Pausa - 6)

LULU: ¡YA!
(Pausa - 2)
Correcto, seis es la suma de dos mas tres mas uno.

CARLOS: Piensen calladitos en cuanto es cuatro mas uno mas dos. Sh-sh-sh. (Pausa - 7)

LULU: !YA!
(Pausa - 2)
Bien, siete es la suma de cuatro mas uno mas dos.

CARLOS: Piensen calladitos en cuanto es cinco mas dos mas uno. Sh-sh-s
(Pausa - 8)

LULU: !YA!
(Pausa - 2)
Si, ocho es la suma de cinco mas dos mas uno.

CARLOS: Piensen calladitos en cuanto es tres mas tres mas cuatro. Sh-sh-sh. (Pausa - 10)

LULU: !YA!
(Pausa - 2)
Aja, diez es la suma de tres mas tres mas cuatro.

CARLOS: Piensen calladitos en cuanto es cinco mas cuatro mas tres. Sh-sh-sh. (Pausa - 12)

LULU: !Ya!
(Pausa - 2)
Bien, doce es la suma de cinco mas cuatro mas tres.

VOZ: Escuchen, ninos. Solo escuchen.

MUSICA: JINGLE QUE IMPORTANTE ES EL DOS

VOZ: Ninos, cantemos "Que importante es el dos".

MUSICA: QUE IMPORTANTE ES EL DOS

FUNDE A:

SONIDO: CAMPANITAS

VOZ FEMENINA:

!Oigan! . . . Otra vez a usar la cabecita.

LULU: Ninos, ahora contemos de dos en dos hasta el veinte. Dos . . . cuatro . . . seis . . . ocho . . . diez . . . doce . . . catorce . . . dieciseis . . . dieciocho . . . veinte.

MUSICA TRANSICION A CHISTE

APPENDIX D

BOMBIN: Escuchen ninos, les voy a contar un chile. (carcajada) Le dice Pepito a su mama:

PEPITO: Mami, mami, adivina que tengo en la manos.

MAMA: ?Un yoyo?

PEPITO: !No!

MAMA: ?Un boton?

PEPITO: !No!

MAMA: ?Caramelos?

PEPITO: !No!

MAMA: Y, ?que?

PEPITO: Los dedos, mami.

SONIDO RISAS

SIGUE A:

SONIDO CAMPANITAS REPITE

CARLOS: Ninos, sigamos con los ejercicos. Diganme, ?cuanto es treinta y dos menos uno? (Pausa - 2)

LULU: Eso es, treinta y uno.

CARLOS: ?Cuanto es veinticinco menos uno? (Pausa - 2)

LULU: Bien, veinticuatro. Sigamos.

CARLOS: ?Cuanto es dieciseis menos uno? (Pausa - 2)

LULU: Si, quince.

CARLOS: ?Cuanto es cuarenta y siete menos uno? (Pausa - 2)

LULU: Aja, cuarenta y seis.

CARLOS: ?Cuanto es catorce menos uno? (Pausa - 2)

LULU: Muy bien, trece.

CARLOS: ?Cuanto es veintiocho menos uno? (Pausa - 2)

LULU: Si, veintisiete.

CARLOS: ?Cuanto es veinte menos uno? (Pausa - 2)

LULU: Correcto, diecinueve.

CARLOS: ?Cuanto es treinta y seis menos uno? (Pausa - 2)

LULU: Si, Trienta y cinco.

MUSICA TRANSICION A H.T.

VOZ: Soy yiya, cabecita de ajo.
Mi musica anuncia la hoja de trabajo.

CARLOS: Ninos, vamos a la hoja de trabajo, a la primera cara.
(Pausa - 3)
Busquen la bandera con la pina. En ese cuadro busquen el numero setenta y nueve. Pongan el dedo debaja del numero setenta y nueve. Ahora diganme, ?como esta escrito el setenta y nueve?
(Pausa - 2)
Aja, con un siete y un nueve. Encierren el setenta y nueve.
(Pausa - 7)
Ahora, bajen a la bandera con la bola. En ese cuadro busquen el numero noventa y nueve. Pongan el dedo debajo. Diganme, ?como esta escrito el noventa y nueve?
(Pausa - 2)
Si, con un nueve y otro nueve. Encierren el noventa y nueve.
(Pausa - 7)
Bajen a la bandera que tiene una mano. Ahi busquen el numero cuarenta y cuatro. Pongan el dedo debajo. Diganme, ?como esta escrito el cuarenta y cuatro?
(Pausa - 2)
Si, con un cuatro y otro cuatro. Encierren el cuarenta y cuatro.
(Pausa - 7)
Bajen a la bandera con la casa. Busquen el numero cien. Pongan el dedo debajo. ?Como esta escrito el cien?
(Pausa - 2)
Muy bien, con un uno, un cero y otro cero. Enceirren el numero cien.
(Pausa - 7)
Y por ultimo, bajen a la bandera con el lapiz. Busquen el numero setenta y siete. Pongan el dedo debajo. ?Como esta escrito el setenta y siete?
(Pausa - 2)
Si, con un siete y otro siete. Encierren el setenta y siete.
(Pausa - 7)

MUSICA TRANCISION A CHISTES (REPITE)

PEPITO: Mami, mami, adivina que tengo en las manos.

APPENDIX D

MAMA: ?Un yoyo?

PEPITO: !No!

MAMA: ?Un boton?

PEPITO: !No!

MAMA: ?Carmelos?

PEPITO: !No!

MAMA: Y, ?que?

PEPITO: Los dedos, mami.

SONIDO: RISAS

SIGUE A:

MUSICA TRANSICION A H.T.

LULU: Ninos, volvamos a la hoja de trabajo. Pongan el dedo en el dado con el pajaro. Fijense bien. Ese ejercicio dice: ocho menos cinco. Piensen calladitos en cuanto es ocho menos cinco.
(Pausa - 8)
Diganme, ?Cuanto es ocho menos cinco?
(Pausa - 2)
Si, tres. Ahora escriban la respuesta en la linea de puntos.
(Pausa - 8)
Bajen al dado con el sorbete. Ahi dice: nueve menos ocho.
Piensen calladitos en cuanto es nueve menos ocho.
(Pausa - 9)
Diganme, ?cuanto es nueve menos ocho?
(Pausa - 2)
Eso es, uno. Ahora escriban la respuesta en la linea de puntos.
(Pausa - 8)
Bajen al dado con el carreton. Ahi dice: siete menos tres.
Piensen calladitos en cuanto es siete menos tres.
(Pausa - 7)
?Cuanto es siete menos tres?
(Pausa - 2)
Muy bien, cuatro. Escriban la respuesta en la linea de puntos.
(Pausa - 8)
Bajen al dado con el machete. Ahi dice: nueve menos cuatro.
Piensen calladitos en cuanto es nueve menos cuatro.
(Pausa - 9)
?Cuanto es nueve menos cuatro?
(Pausa - 2)
Correcto, cinco. Escriban la respuesta en la linea de puntos.
(Pausa - 8)

Y por ultimo, bajen al dado con el banano. Ahi dice: ocho menos seis. Piensen calladitos en cuanto es ocho menos seis.
(Pausa - 8)
?Cuanto es ocho menos seis?
(Pausa - 2)
Muy bien, dos. Escriban la respuesta en la linea de puntos.
(Pausa - 8)

MUSICA TRANSICION A JUEGOS

LOBO: Ninos, preparense para jugar. Ahora, imitaremos a un carpintero. Yo les voy diciendo y ustedes lo van haciendo.

MUSICA SUBE

El carpintero carga la madera. Vamos, todos como que cargan madera.

MUSICA SUBE (3)

Ahora, cepillen la madera. Todos cepillando la madera.

MUSICA SUBE (3)

Van a surrechar la madera. Todos moviendo la mano como so fuera un serrucho. Vamos.

MUSICA SUBE (3)

Ahora, claven la madera. Todos clavando. Rapido, ma rapido.

MUSICA SUBE (4)

FUNDE A:

REDOBLE TAMBOR

SIGUE A:

MUSICA TRANSICION A H.T.

CARLOS: Y ahora, de nuevo a la hoja de trabajo. Vamos a los barriletes. Busquen el barrilete con el zapato. En ese cuadro cuenten las bolitas y escriban el numero debajo.
(Pausa - 12)
Bajen al barrilete con el lapiz. Ahi encierren el circulo que esta dividido en cuartos.
(Pausa - 5)
Bajen al barrilete con la casa. Ahi encierren el numero treinta y nueve.
(Pausa - 7)

Bajen al barrilete con el sorbete. Ahi escriban el numero que falta.
(Pausa - 7)
Y por ultimo, bajen al barrilete con la bola. Encierren el numero mayor.
(Pausa - 7)

MUSICA TRANSICION A BOMBA (REPITE)

VOZ: Puede a veces ser muy grande
y aumentar con emocion.
Aumenta y aumenta siempre
y se llama . . . adicion.

MUSICA TERMINA

SIGUE A:

MUSICA TRANSICION A H.T.

LULU: Ninos, sigamos trabajando. Denle vuelta a la hoja de trabajo.
(Pausa - 3)
Ahora, busquen la chimbomba con el banano. En ese cuadro escriban el numero que va despues de ese.
(Pausa - 8)
Vamos a la chimbomba con la flor. Ahi, encierren el numero mayor.
(Pausa - 8)
Vamos a la chimbomba qui tiene una mano. Bien, piensen cuanto es cinco menos cuatro. Escriban la respuesta.
(Pausa - 12)
Vamos a la chimbomba con la hoja. Escriban el numero que va antes de ese.
(Pausa - 8)
Y por ultimo, vamos a la chimbomba con el arbol. Escriban la respuesta de siete menos tres.
(Pausa - 12)

MUSICA TRANSICION A BOMBA

ENANO: ¡Bomba para los ninos!
El enano cabezon,
brinca subiendo y bajando.
Se despide de los ninos
y que sigan trabajando.

MUSICA FINAL

FUNDE A:

TEMA MUSICAL

Lección 96 Versión 1 Fecha 9-7-75 Primer Grado

Materiales: HT No 96; tarjetas con numerales de 0 a 100.

Seg.	Tema y Nivel		Presentación	Parte H. T.	Respuesta Tipo	Título y/o Ejemplo
1	SUM	62.1	Radio		Oral	Adición oral, $a+b+c \leq 12$, r. oral diferida. (1+2+4, 2+3+1, 4+1+2, 5+2+1, 3+3+4, 5+4+3)
2	NUM	227.1	Radio		Oral	Conteo de rutina de 2 en 2 hasta 50, r. oral.
3	RES	37.2	Radio		Oral	Sustracción oral, ab-1, r. oral. (32-1, 25-1, 16-1, 47-1, 14-1, 28-1, 20-1, 36-1)
4	NUM	216.2	Radio	1	Oral SM	Leer numerales, 0-100, r. oral y SM. (79, 99, 44, 100, 77)
5	RES	38.1	Radio	2	Num	Sustracción horizontal, $a-b \leq 9$, r. escrita. "Cuánto es ocho menos cinco? (P) Escriban la respuesta sobre la línea de puntos."
6	REV	16.1	Radio	3 y 4	Ver notas	Repaso
7	LUM	228.1	Maestro	5	Num	Predecesores, 2-12, ej. escrito, r. escrita.
8	SUM	56.3	Maestro	6 y 7	Num	Adición horizontal, $0 \leq a+b \leq 9$, r. escrita.
9	NUM	220.3	Maestro con tarjeta		Oral	Leer numerales, 0-100 en tarjetas, r. oral

APPENDIX D

Leccion 96

Notas al escritor de libretos

Seg 4. "Busquen la bandera que tiene una piña. En ese cuadro pongan un dedo debajo del número 79. (P) Díganme, ¿cómo está escrito el 79? (P) cierto. El setenta y nueve se escribe con un 7 y un 9. Ahora encierren el 79."

Seg 5. Primera vez. Leer ejercicios completos después de resolverlos.

Seg 6. "Cuenten las bolitas y escriban el número de bajo." (12 seg)

"Encierren el círculo que está dividido en cuartos." (5 seg)

"Encierren el número 39." (7 seg)

"Escriban sobre la raya el número que falta." (7 seg)

"Encierren el número 90." (7 seg)

"Escriban el número que va desqués de ese." (8 seg)

"Encierren el número mayor." (8 seg)

"Piensen cuánto es cinco menos cuatro. Escriban ahí la respuesta." (12 seg)

"Escriban el número que va antes de ese." (8 seg)

"Escriban la respuesta de 9 - 3." (12 seg)

Primer Grado

Lección Nº 96.

Guía del Maestro.

Materiales: Hoja de trabajo Nº 96
Tarjetas con numerales del 0 al 100.

Escribir el numero que va antes . . .

Al terminar la transmisión, diga a los niños que en el siguiente ejercicio, escribirán en la rayita el número que va antes del que está escrito. Puede preguntarles: ¿Qué número se escribe antes del 8? entonces escriban en la rayita el Nº 7. Déjelos hacer los demás ejercicios a ellos solos.

Escribir respuestas a adiciones horizontales . . .

Léales el primer ejercicio así: Dos más cuatro es igual a; pregúnteles: ¿a cuánto es igual dos más cuatro? entonces escriban la respuesta en la línea de puntos. Pregunte a un niño ¿Cómo se lee el segundo ejercicio?, haga que otro diga la respuesta. Dígales que continúen haciendo los demás ejercicios que faltan, escribiendo la respuesta en la línea de puntos.

Leer numerales de 0 a 100 con tarjetas . . .

Tenga listas las tarjetas con numerales. Preséntelas ordenadamente del 80 al 100 pidiendo a los niños que las lean en voz alta. Luego junte todas las tarjetas y muéstrelos a los niños para que ellos las lean en voz alta. Después puede repartir todas las tarjetas entre los niños y que ellos lean en silencio los números que tienen; finalmente puede decirles por ejemplo: "El que tenga la tarjeta con el número 38, levántela y enseñela a sus compañeros." Puede hacer lo mismo diciéndoles otros números hasta completar los 100.

APPENDIX D

Grade 1

Lesson 96

Teacher's Guide

Materials: Worksheet no. 96
Cards with numerals from 0 to 100

Writing the number that comes before . . .

At the end of the transmission, tell the children that in the following exercises they are to write on the line the number that comes before the one that is written. You can ask them: "What number is written before 8? Then write 7 on the line." Let them finish the rest of the exercises by themselves.

Writing answers to horizontal addition exercises . . .

Read the first exercise this way: "Two plus four is equal to." Ask them: "How much does two plus four equal? Then write the answer on the dotted line." Ask one child, "How do we read the second exercise?" Ask another to give the answer. Tell them to continue working the remaining exercises, writing the answer on the dotted line.

Reading numerals from 0 to 100 with cards . . .

Have ready the cards with numerals. Present the cards from 80 to 100 in order, asking the children to read them aloud. Then mix up all the cards and show them to the children so they can read them aloud. Then you can distribute all the cards among the children and have the children read to themselves the numbers they have. Finally, you can tell them, for example, "Whoever has the card with number 38, stand up and show it to the other students." You can repeat the same instructions with other numbers until you have completed all 100.

THE RADIO MATHEMATICS PROJECT

APPENDIX E: TERMINAL CURRICULUM OBJECTIVES FOR FIRST GRADE

Two types of objectives are identified, minimal and advanced. Minimal objectives are to be attained by all students; advanced objectives guide curriculum development of topics beyond the minimal level. Some objectives guide curriculum development but are not testable with the group pencil-and-paper testing procedures used by the project to evaluate achievement.

The following list identifies objectives as minimal (M) or advanced (A) and as amenable to test using our procedures (T) or not (N). Objectives are identified by strand. The objectives are described on page 4. In describing addition and subtraction exercises, lowercase letters are used to represent single digits.

Strand	Description	Minimal or advanced	Testable
NUM-1	Rote counting by ones	M	N
NUM-2	Rote counting by twos	A	N
NUM-3	Rote counting by fives	A	N
NUM-4	Rote counting by tens	M	N
NUM-5	Rote counting backwards	A	N
NUM-6	Reading numerals	M	N
NUM-7	Selection of numeral	M	T
NUM-8	Writing numerals	M	T
NUM-9	Successors, aural stimulus	M	T
NUM-10	Successors, printed stimulus	M	T
NUM-11	Predecessors. aural stimulus	A	T

(list, cont.)

Strand	Description	Minimal or advanced	Testable
NUM-12	Predecessors, printed stimulus	A	T
NUM-13	Counting	M	T
NUM-14	Counting a specified subset	A	T
NUM-15	Counting the complement of a specified set	A	T
NUM-16	Greatest and least	M	T
NUM-17	Completing sequences	A	T
NUM-18	Ordinals	M	T
NUM-19	Reading number words	A	T
NUM-20	Selecting number words	A	T
NUM-21	Writing number words	A	T
NUM-22	Fractions, identification	M	T
NUM-23	Fractions, discrimination	M	T
ADD-1	Addition, aural stimulus	M	T
ADD-2	Vertical addition	M	T
ADD-3	Horizontal addition	M	T
ADD-4	Horizontal addition, noncanonical format	A	T
SUB-1	Subtraction, aural stimulus	M	T
SUB-2	Vertical subtraction	M	T
SUB-3	Horizontal subtraction	M	T
MEA-1	Length, cm	M	T
APL-1	Money, identification	M	T
APL-2	Money, value	M	T
APL-3	Time, hours	A	T

APPENDIX E

(list, cont.)

Strand	Description	Minimal or advanced	Testable
APL-4	Time, days of week	A	N
APL-5	Time, successors of days of week	A	N
APL-6	Word problems, addition	M	T
APL-7	Word problems, subtraction	M	T
APL-8	Word problems, multiplication	A	T
APL-9	Word problems, division	A	T

Objectives for First Grade

NUM-1 Rote counting by ones

When asked to count aloud, the child will count, "one, two, three, . . ." until stopped (no farther than 100).

NUM-2 Rote counting by twos

When asked to count aloud by twos, the child will count, "two, four, six, . . ." until stopped (no farther than 20).

NUM-3 Rote counting by fives

When asked to count aloud by fives, the child will count, "five, ten, fifteen, . . ." until stopped (no farther than 50).

NUM-4 Rote counting by tens

When asked to count aloud by tens, the child will count, "ten, twenty, thirty, . . ." until stopped (no farther than 100).

NUM-5 Rote counting backwards

When asked to count backwards from ten, the child will count, "ten, nine, eight, . . . ,one."

NUM-6 Reading numerals

Given a printed numeral (0 to 100), the child will say aloud the name of the number.

Example: "What number is this?"

48

NUM-7 Selection of numeral

Given a set of 2 to 10 printed numerals (0 to 100) and the oral instruction to select a specified numeral, the child will indicate the correct numeral by pointing or circling.

Example: "Circle the 41."

58 0 4 41 40 14

NUM-8 Writing numerals

Given an oral instruction to write a specified numeral (0 to 99), the child will do so.

Example: "Write the number 87."

NUM-9 Successors, aural stimulus

When asked to produce the number that follows a specified number (1 to 98), the child will give the correct response orally or as a numeral.

Example: "What number comes after 32?"

Example: "Write the number that comes after 59."

NUM-10 Successors, printed stimulus

Given a printed numeral (1 to 98) and the oral instruction to write the successor, the child will do so.

Example: "Write the number that comes after this one."

35 ___

APPENDIX E

NUM-11 Predecessors, aural stimulus

When asked to produce the number that comes before a specified number (2 to 99), the child will give the correct response orally or as a numeral.

Example: "What number comes before 20?"

Example: "Write the number that comes before 8."

NUM-12 Predecessors, printed stimulus

Given a printed numeral (2 to 99) and the oral instruction to write the predecessor, the child will do so.

Example: "Write the number that comes before this one."

___ 15

NUM-13 Counting

Given a set of up to 50 small similar objects (such as pencils, beans, or bottle tops) or a drawing of a set of similar objects (such as balloons, cows, or cars) and an oral instruction to count, the child will say or write the number of objects in the set.

Example: "Count the baseballs."

(appropriate picture)

NUM-14 Counting a specified subset

Given a set (or a picture of a set) of up to 50 similar objects containing a subset of up to 10 objects distinguished from its complement by a characteristic that can be recognized by the child, and an oral instruction to count the object with the distinguishing characteristic, the child will say or write the number of objects in the subset.

Example: "Count the marbles that have spots."

(appropriate picture)

NUM-15 Counting the complement of a specified set

Given a set (or a picture of a set) of up to 50 similar objects containing a subset of objects distinguished from its complement by a characteristic that can be recognized by the child, with the complement of the subset containing no more than 10 objects, and the oral instruction to count the objects that do not have the distinguishing characteristic, the child will say or write the number of objects in the complement of the subset.

Example: "Count the clowns that do not have hats."

(appropriate picture)

NUM-16 Greatest and least

Given a set of 2 to 5 printed numerals (0 to 100) and the oral instruction to select the greatest (or least), the child will indicate the correct choice by pointing or circling.

Example: "Point to the least number."

25 2 52 11

NUM-17 Completing sequences

Given a printed arithmetic sequence of 4 to 8 numbers, with the characteristics described below and with any number other than the first replaced by a blank line, the child will write the missing number.

Incremental difference	Starting number of form (k an integer)	Limits on numbers
1	k	1 - 100
2	2k	2 - 20
5	5k	5 - 50
10	10k	10 - 100
-1	k	10 - 1

Example: "Write the missing number."

4 6 ___ 10

NUM-18 Ordinals

Given an ordered set (or picture of an ordered set) in which there is an unambiguous first element and ordering (i.e., the child can identify the first element, the next, etc.) and an

oral instruction to select the second, third, fourth, fifth, or sixth object, the child will indicate the correct answer by pointing or circling.

Example: "Circle the fifth person in line."

(appropriate picture)

NUM-19 Reading number words

Given a printed name for a number from one to ten, the child can read the word aloud.

NUM-20 Selecting number words

Given a set of number names (1 to 10) and an oral instruction to select a specified word, the child will indicate the correct choice by pointing or circling.

Example: "Circle the word five."

ONE FIVE FOUR THREE

NUM-21 Writing number words

Given the oral instruction to write the word for a specified number between one and ten, the child can do so.

Example: "Write with letters the word eight."

NUM-22 Fractions, identification

Given a set of figures divided into 2, 3, 4, or 5 equal parts, the child will indicate by circling or pointing the figure that is divided into halves, thirds, fourths, or fifths. (Figures are divided by horizontal or vertical lines and all parts are of equal size and shape.)

Example: "Circle the figure that is divided into thirds."

(appropriate picture)

NUM-23 Fractions, discrimination

Given a pair of figures, one of which is divided into 2 (3, 4) equal parts and the other into 2 (3, 4) unequal parts, the child

will select the one that is divided into halves (thirds, fourths)

Example: "Circle the figure that is divided into thirds."

ADD-1 Addition, aural stimulus

Given an addition exercise presented orally, of the specifications described below, the child will produce the sum orally or as a printed numeral. (Recall that lower case letters represent single digits, e.g., a0 is a multiple of 10 less than 100, etc.)

Exercise description	Example
a + b	"Write the sum of 6 and 7."
a0 + b	"What is 20 plus 8?"
ab + 1	"What is 28 plus 1?"
a + b + c (a + b =< 10)[a]	"What is 4 plus 5 plus 8?"

ADD-2 Vertical addition

The child will write the correct answer for an addition exercise presented in vertical format for any of the following classes of exercises.

Exercise description		Example
a + b		6 + 3
ab + c	(b + c =< 9)	23 + 5
ab + cd	(a + c =< 9) (b + d =< 9)	17 + 62
a b + c	(a + b =< 10)	2 5 + 3

ADD-3 Horizontal addition

The child will write the correct answer to an addition exercise presented in horizontal format for any of the following classes of exercises.

Exercise description	Example
a + b = ___	5 + 9 = ___
a0 + b = ___	70 + 2 = ___
ab + 1 = ___	36 + 1 = ___
a + b + c = ___ (a + b =< 10)	7 + 2 + 5 = ___

ADD-4 Horizontal addition, noncanonical format

Given a written exercise of the form

a + __ = b or __ + a = b

and the oral instruction to supply the missing number, the child will write the missing addend.

Example: "Write the missing number."

6 + __ = 9

SUB-1 Subtraction, aural stimulus

Given a subtraction exercise presented orally, of the specifications described below, the child will produce the correct answer orally or as a printed numeral.

Exercise description	Example
a - b	"How much is 7 minus 3?"
ab - b	"Write the difference, 23 minus 3."
ab - 1	"How much is 25 minus 1?"

SUB-2 Vertical subtraction

The child will write the correct answer for a subtraction exercise presented in vertical format for any of the following classes of exercises.

Exercise description		Example
a - b		4 - 3
ab - c	(b >= c)[b]	26 - 6
ab - cd	(b >= d) (a >= c)	65 - 22

SUB-3 Horizontal subtraction

The child will write the correct answer to a subtraction exercise presented in horizontal format for the following exercise class.

Exercise description	Example
a - b = ___	9 - 2 = ___

MEA-1 Length, cm

Given a ruler marked in centimeters and an object that is 1 cm, 2 cm, . . . , 10 cm, in length, the child will measure and give orally or as a numeral the correct length.

APL-1 Money, identification

Given a set (or a picture of a set) of up to 4 coins or bills (of no greater value than 100 cordobas) and the oral instruction to choose the coin (bill) of a specified value, the child will indicate the correct response by pointing or circling.

APL-2 Money, value

Given a set of coins or bills conforming to the specifications given below, the child will write the combined value as a numeral.

For bills, sums are of the form A + B, D + B, and A + B + C where A, B, C are chosen from the set {1, 2, 5 cordobas} and D is chosen from the set {10, 20, 50 cordobas}.

For coins, sums are of the form A + B and C + A, where A, B are chosen from the set {5, 10 centavos} and C is 50 centavos.

APL-3 Time, hours

Given pictures of three clocks showing time to an even hour and an oral instruction to select the clock that shows a specified time, the child will indicate the correct choice by pointing or circling.

APL-4 Time, days of the week

When asked to recite the days of the week the child will respond, "Monday, Tuesday, . . ., Sunday."

APL-5 Time, successors of days of the week

When asked for the day that follows a specified day, the child will give the correct response orally.

APL-6 Word problems

Given a description or dramatization of a simple addition problem embedded in a real-life situation, the child will mentally solve the problem and give the answer in either oral or written form.

APL-7 Word problems

Given a description or dramatization of a simple subtraction problem embedded in a real-life situation, the child will mentally solve the problem and give the answer in either oral or written form.

APL-8 Word problems

Given a description or dramatization of a simple multiplication problem embedded in a real-life situation, the child will mentally solve the problem and give the answer in either oral or written form.

APL-9 Word Problems

Given a description or dramatization of a simple division problem embedded in a real-life situation, the child will

mentally solve the problem and give the answer in either oral or written form.

[a] =< means "is less than or equal to."

[b] >= means "is greater than or equal to."

APPENDIX F: LESSON OUTLINES FOR 1975 FIRST-GRADE CURRICULUM

The following pages contain a description of the first-grade curriculum. Information about each lesson segment is displayed in five columns which are described here.

Column 1: Strand Identification

Abbreviations (from Spanish words)

BAS	Basic Concepts
NUM	Number Concepts
SUM	Addition
RES	Subtraction
APL	Applications
MED	Measurement
TST	Test exercises from many strands

Column 2: Instructional class identifier, X.Y

X is the instructional class number within a strand.

Y indicates the Yth segment defined using class X.

From lesson 116, identification number preceded by alphabetic characters.

Column 3: Medium of Presentation

R	radio
M	teacher
R/M	transition segment started by radio, completed by teacher

Column 4: Response Type

O	oral
P	physical
MC	written, multiple choice
N	written, free response of a number
D	drawing
Var	variety of response types (for review segments)

Column 5: Description of segment

lower-case letters represent single digit numbers

a0	multiple of 10
>=	is greater than or equal to
=<	is less than or equal to
=/	is not equal to

THE RADIO MATHEMATICS PROJECT

Outline

Lesson 1

BAS	1.1	R	O	Listening exercises, general questions
BAS	2.1	R	P	Listening exercises, physical exercise
NUM	1.1	R	O	Rote counting, counting song, 1-5
NUM	2.1	M	O	Counting pictures, 1-3
BAS	3.1	M	MC	Identifying common objects
NUM	3.1	M	O	Counting bottle caps, 1-3

Lesson 2

NUM	4.1	M	O	Counting pictures, 1-3
NUM	4.2	M	MC	Counting pictures, 1-3
NUM	3.2	M	O	Counting objects, 1-5

Lesson 3

BAS	1.2	R	O	Listening exercises, general questions
NUM	5.1	R	O	Counting objects, 1-3
NUM	1.2	R	O	Rote counting, 1-5
NUM	6.1	R	O	Successors of 1 and 2
BAS	2.2	R	P	Listening exercises
NUM	4.3	M	O	Counting pictures, 1-4
BAS	3.2	M	MC	Identifying common objects
NUM	4.4	M	MC	Counting pictures, 1-3

Lesson 4

NUM	1.3	M	O	Rote counting, 1-5, with song
NUM	3.3	M	O	Counting objects, 1-4
NUM	2.2	M	O	Counting pictures, 1-4
BAS	3.3	M	MC	Identifying common objects
NUM	4.5	M	MC	Counting pictures, 1-4

Lesson 5

NUM	5.2	R	O	Counting objects, 1-4
NUM	1.4	R	O	Rote counting, 1-5
NUM	7.1	R	O	Successors, 1-4
BAS	2.3	R	P	Listening exercises
BAS	3.4	M	MC	Identifying common objects
NUM	4.6	M	O	Counting pictures, 1-4
NUM	4.7	M	MC	Counting pictures, 1-4

Lesson 6

NUM	2.4	R	P	Listening exercises
NUM	8.1	R	O	Rote counting, 1-10, with song

NUM	8.2	R	O	Rote counting, 1-10
NUM	7.2	R	O	Successors, 1-4
BAS	3.5	R	MC	Identifying common objects
NUM	3.4	M	O,P	Counting objects, 1-4

Lesson 7

NUM	9.1	M	O	Counting objects, 1-4
NUM	8.3	M	O	Rote counting, 1-10
BAS	3.6	M	MC	Identifying common objects
NUM	10.1	M	MC	Counting pictures, 1-4
NUM	10.2	M	MC	Counting pictures, 1-4

Lesson 8

BAS	2.5	R	P	Listening exercises
NUM	8.4	R	O	Rote counting, 1-10, with song
NUM	8.5	R	O	Rote counting, 1-10
NUM	11.1	R	O	Successors, 1-5
NUM	12.1	R	O	Reading numerals, 1-2
NUM	10.3	R	MC,O	Counting pictures, 1-4
NUM	12.2	M	MC	Reading numerals, 1-2
NUM	3.7	M	MC	Identifying common objects
NUM	12.3	M	O	Reading numerals, 1-2
NUM	9.2	M	O	Counting objects, 1-4

Lesson 9

NUM	8.6	M	O	Rote counting, 1-10
NUM	12.4	M	O	Reading numerals, 1-2
NUM	12.5	M	MC	Reading numerals, 1-2
NUM	10.4	M	O	Counting pictures, 1-4
BAS	3.8	M	MC	Identifying common objects
NUM	9.3	M	O	Counting objects, 1-4

Lesson 10

BAS	2.6	R	P	Listening exercises
NUM	8.7	R	O	Rote counting, 1-10
NUM	13.1	R	O	Successors, 1-6
NUM	10.5	R	MC	Counting pictures, 1-4
NUM	14.1	R	O	Reading numerals, 1-3
NUM	15.1	M	MC,O	Counting pictures, 1-4
NUM	14.2	M	O	Reading numerals, 1-3
NUM	16.1	M	O	Counting objects, 1-5

Lesson 11

SUM	1.1	R	O,P	Preparation for addition
APL	1.1	R	O,P	Oral story problems, using bottle caps
NUM	13.2	R	O	Successors, 1-5

NUM	17.1	R	O	Rote counting, 1-13
NUM	16.2	M	O,P	Counting objects, 1-5
NUM	14.3	M	O	Reading numerals, 1-3
NUM	14.4	M	MC	Circling picture with numeral, 1-3
NUM	18.1	M	D	Drawing number of balls, 1-3
BAS	3.9	M	MC	Identifying common objects
NUM	19.1	M	N	Write numerals, 1-3, copying

Lesson 12

NUM	17.2	M	O	Rote counting, 1-13
NUM	20.1	M	O	Counting bottle caps, 1-6
APL	1.2	M	O	Addition story problems
NUM	21.1	M	O	Reading numerals, 1-4
NUM	21.2	M	MC	Reading numerals, 1-4
BAS	3.10	M	MC	Identification of common objects
NUM	22.1	M	D	Reading numerals, 1-3
NUM	19.2	M	N	Write numerals, 1-3, copying

Lesson 13

NUM	17.3	R	O	Rote counting, 1-13
SUM	1.2	R	O,P	Preparation for addition
APL	1.3	R	O,P	Oral story problems, using bottle caps
NUM	23.1	R	O	Successors, 1-7
NUM	24.1	M	O	Reading numerals, 1-5
BAS	3.11	M	MC	Identification of common objects
NUM	19.3	M	N	Writing numerals, 1-3, copying
NUM	15.2	M	MC	Counting pictures, 1-4
NUM	25.1	M	D	Reading numerals, 1-4
NUM	20.2	M	O	Counting objects, 1-6

Lesson 14

NUM	26.1	M	O	Rote counting, 1-15
NUM	23.2	M	O	Successors, 1-7
APL	1.4	M	O	Oral story problems
NUM	27.1	M	O	Counting objects, 1-7
NUM	28.1	M	O	Reading numerals, 1-6
BAS	3.12	M	MC	Identification of objects
NUM	29.1	M	N	Write numerals, 1-5, copying
NUM	30.1	M	N	Write numerals, 1-3, from dictatior
NUM	31.1	M	D	Reading numerals, 1-5

Lesson 15

NUM	26.2	R	O	Rote counting, 1-15
NUM	32.1	R	O	Successors, 1-8
APL	1.5	R	O	Oral story problems, addition
BAS	3.13	R	MC	Identify objects
NUM	30.2	M	N	Write numerals from dictation, 1-3

NUM	31.2	M	D	Reading numerals 1-5
NUM	29.2	M	N	Write numerals, 1-5, copying
NUM	33.1	M	O	Reading numerals, 1-7
NUM	27.2	M	O	Counting objects, 1-7

Lesson 16

SUM	1.3	R	O,P	Preparation for addition, using fingers
NUM	34.1	R	O	Rote counting, 1-20, twice
NUM	35.1	R	O	Successors, 1-9
NUM	36.1	R	MC	Reading numerals, 1-5
NUM	37.1	R	N	Write numerals from dictation, 1-5
NUM	38.1	R	D	Counting 1-3
NUM	39.1	R	O,MC	Ordinals, first, second
NUM	31.3	M	D	Reading numerals 1-5
NUM	40.1	M	O	Reading numerals, 1-9
NUM	41.1	M	O,P	Counting objects, 1-10

Lesson 17

NUM	34.2	M	O	Rote counting, 1-20
NUM	40.2	M	O	Reading numerals 1-9
NUM	31.4	M	D	Reading numerals, 1-5
NUM	42.1	M	N	Counting pictures 1-5
NUM	43.1	M	N	Write numerals, 1-9, copying
NUM	41.2	M	O,P	Counting objects, 1-10

Lesson 18

SUM	3.1	R	O,P	Preparation for addition, using fingers
NUM	34.3	R	O	Rote counting, 1-20
NUM	35.2	R	O	Successors 1-10
NUM	44.1	R	N	Write numerals from dictation, 1-6
NUM	45.1	R	O,N	Successors 1-4
NUM	39.2	R	MC	Ordinals, 1st and 2nd, using pictures
SUM	2.1	R	D,O	Preparation for addition, drawing balls and counting them
NUM	46.1	M	MC	Reading numerals, 1-7
NUM	40.3	M	O	Reading numerals, 1-9, using cards
NUM	41.3	M	O,P	Counting objects, 1-10

Lesson 19

NUM	34.1	M	O	Rote counting, 1-20
NUM	41.4	M	O,P	Counting objects, 1-10
NUM	40.4	M	O	Reading numerals, 1-9
NUM	31.5	M	D	Reading numerals 1-3
NUM	47.1	M	N	Counting pictures 1-6
NUM	43.2	M	N	Write numerals 1-9, copying

Lesson 20

SUM	4.1	R	O,P	Preparation for addition, with fingers
NUM	34.5	R	O	Rote counting, 1-20, twice
NUM	35.3	R	O	Successors, 1-10
NUM	48.1	R	N	Successors, 1-5
NUM	46.2	R	MC	Reading numerals, 1-7
NUM	49.1	R	N	Write numerals from dictation, 1-7
NUM	31.6	R	D	Reading numerals, 1-4
NUM	50.1	M	N	Counting pictures 1-7
NUM	41.5	M	O,P	Counting objects, 1-10
APL	1.6	M	O	Oral story problems, 1 =< a + b =< 4,

Lesson 21

NUM	51.1	R	O	Rote counting, 1-30
SUM	4.2	R	O,P	Preparation for addition, with fingers
TST	1.1	R	MC,N,D	Review
SUM	5.1	R	O	Preparation for oral addition, counting pictures
NUM	52.1	R	MC	Successors, 1-4
NUM	53.1	R	MC	Which picture has more objects, 1-4
NUM	54.1	M	N	Counting pictures 1-9
NUM	55.1	M	N	Completing number series, 1-4

Lesson 22

NUM	51.2	R	O	Rote counting, 1-30
APL	1.7	R	O,P	Oral problems, using fingers, 1 =< a + b =< 6, 1 =< a, b =< 3
SUM	4.3	R	O,P	Preparation for addition, using fingers
SUM	5.2	R	O	Preparation for addition, counting pictures
NUM	56.1	R	N	Successors, 1-7
NUM	53.2	R	MC	Picture that has more objects, 1-4
SUM	2.2	M	D	Preparation for addition
NUM	55.2	M	N	Number series completion, 1-4

Lesson 23

NUM	57.1	R	O	Rote counting, 10-20
APL	2.1	R	O,P	Oral story problems, 2 =< a + b =< 6
SUM	2.3	R	D	Preparation for addition
SUM	6.1	R	O,N	Oral addition, written response, 1 =< a + b =< 4
NUM	58.1	R	MC	Successors, 1-8
NUM	59.1	M	MC	Which picture has more, 1-5
NUM	60.1	M	N	Counting pictures 1-9
NUM	55.3	M	N	Number series completion, 1-4

APPENDIX F

Lesson 24

NUM	51.3	R	O	Rote counting, 1-30
APL	2.2	R	O,P	Oral story problems, with fingers 2 =< a + b =< 6
SUM	6.2	R	N	Oral addition 1 =< a + b =< 4
NUM	61.1	R	MC	Which picture has less, 1-4
NUM	56.2	R	N	Successors 1-7
NUM	62.1	R	O	Successors, 1-5
NUM	60.2	M	N	Counting objects 1-9
NUM	55.4	M	N	Successors 1-4

Lesson 25

NUM	63.1	R	O	Rote counting, 10-20 and 20-30
SUM	7.1	R	O,N	Vertical addition, 1 =< a + b =< 4
NUM	64.1	R	MC	More and less (pictures)
NUM	58.2	R	MC	Successors, 1-8
NUM	62.2	R	O	Successors 1-5
NUM	60.3	M	N	Counting pictures 1-9
NUM	55.5	M	N	Successors 1-4

Lesson 26

NUM	63.2	R	O	Rote counting, 20-30
TST	2.1	R	N,MC	Review
SUM	8.1	R	O,N	Vertical addition, 1 =< a + b =< 5
NUM	65.1	R	MC	Counting pictures, 0-9
NUM	66.1	M	N	Successors, 1-8
NUM	60.4	M	N	Counting pictures 1-9

Lesson 27

NUM	63.3	R	O	Rote counting 10-20, 20-30
APL	3.1	R	O	Oral story problems, 2 =< a + b =< 6
SUM	8.2	R	O,N	Vertical addition, 2 =< a + b =< 5
NUM	67.1	R	MC	More and less, 1-6
NUM	65.2	R	MC	Counting pictures 0-9
NUM	60.5	M	N	Counting pictures 1-9
NUM	68.1	M	N	Rote counting, 1-40

Lesson 28

NUM	69.1	R	O	Rote counting, 10-20, 30-40
SUM	8.3	R	O,N	Vertical addition, 2 =< a + b =< 5
SUM	9.1	R	N	Oral addition 2 =< a + b =< 5
NUM	70.1	R	MC	Reading numerals 0-9
NUM	65.3	R	MC	Counting pictures 0-9
NUM	66.2	M	N	Successors 1-8
NUM	60.6	M	N	Counting pictures 1-9
NUM	71.1	M	O	Reading numerals 0-9, with cards

Lesson 29

NUM	69.2	R	O	Rote counting, 30-40
APL	3.2	R	O	Oral story problems
SUM	10.1	R	D,N	Vertical addition, 2 =< a + b =< 8, 1 =< a, b =< 5
NUM	72.1	R	MC	More and less, 1-6
NUM	73.1	R	N	Write numerals from dictation, 0-9
SUM	10.2	M	N	Vertical addition, 2 =< a + b =< 8
NUM	74.1	M	N	Write numerals 0-9, copying

Lesson 30

NUM	69.3	R	O	Rote counting, 20-30
SUM	10.3	R	D,N	Vertical addition, 2 =< a + b =< 8, 1 =< a, b =< 5
NUM	72.2	R	MC	More and less, 1-6
SUM	9.2	R	N	Oral addition, written response, 2 =< a + b =< 5
NUM	73.2	R	N	Writing numerals from dictation, 0-9
NUM	66.3	M	N	Successors 1-8
SUM	11.1	M	N	Vertical addition, 2 =< a + b =< 9, 1 =< a, b =< 5

Lesson 31

NUM	75.1	R	O	Counting sounds, n =< 5
NUM	69.4	R	O	Rote counting, 10-20, 20-30, 30-40
SUM	12.1	R	O	Oral addition, 2 =< a + b =< 7, 1 =< a, b =< 5
TST	3.1	R	Var	Review
NUM	76.1	R	N	Successors 1-8
NUM	66.4	R/M	N	Successors 1-8
NUM	71.2	M	O	Reading numerals 0-9, with cards
NUM	77.1	M	O	Rote counting, 1-50

Lesson 32

APL	3.3	R	O	Oral story problems, 2 =< a + b =< 6
SUM	12.2	R	O	Oral addition 2 =< a + b =< 7, 1 =< a, b =< 5
NUM	73.3	R	N	Write numerals from dictation, 0-9
NUM	72.3	R	MC	More and less, 1-9
SUM	13.1	R	D,N	Vertical addition, 2 =< a + b =< 9, 1 =< a, b =< 8
NUM	66.5	M	N	Successors 1-8
NUM	78.1	M	N	Counting pictures 0-9
NUM	77.2	M	O,P	Rote counting, 1-50, 30-50

Lesson 33

APL	3.4	R	O	Oral story problems, 2 =< a + b =< 6
SUM	14.1	R	O	Oral addition, 2 =< a + b =< 7, 1 =< a, b =< 5
SUM	15.1	R	O,N	Preparation for addition with zero
NUM	78.2	R	N	Counting pictures 0-9
NUM	79.1	R	O,N	Counting elements of a subset, N < M =< 9
NUM	80.1	R	MC	More and less, 1-9
SUM	13.2	M	N	Vertical addition, 2 =< a + b =< 9, 1 =< a, b =< 8
NUM	81.1	M	O	Rote counting, a0 to b0, b =< 5, b = a + 1

Lesson 34

NUM	82.1	R	O	Successors 1-9
NUM	75.2	R	O	Counting sounds, n =< 5
Num	83.1	R	MC	Introduction to greater than
NUM	79.2	R	N	Counting elements in a subset n < m =< 9
SUM	16.1	R	N	Oral addition, 2 =< a + b =< 7, 1 =< a, b =< 5
APL	4.1	R	O,N	Oral story problems, 2 =< a + b =< 6
SUM	13.3	M	N	Vertical addition
NUM	84.1	M	O	Successors of 9-19

Lesson 35

NUM	85.1	R	O	Successors 9-19
BAS	4.1	R	O	Sufficiency, s =< n
SUM	15.2	R	N	Preparation for adding with zero
NUM	83.2	R	MC,O	Introduction to greater than
SUM	16.2	R	N	Oral addition, 2 =< a + b =< 7, 1 =< a, b =< 5
APL	4.2	R	N	Oral story problems, 2 =< a + b =< 6
NUM	84.2	M	Var	Successors 1-19

Lesson 36

NUM	86.1	R	O	Counting sounds, 1-7
NUM	70.2	R	MC	Reading numerals, 0-9
SUM	17.1	R	N	Oral addition
TST	4.1	R	Var	Review
SUM	18.1	R/M	N	Vertical addition, 1 =< a + b =< 9
NUM	87.1	M	O	Rote counting 1-60
NUM	88.1	M	O,P	Counting objects, 10-20

Lesson 37

NUM	81.2	R	O	Rote counting a0-b0, b =< 6, b = a + 1
NUM	89.1	R	MC	Circling the largest numeral, 1-9

SUM	17.2	R	N	Oral addition, 2 =< a + b =< 7
NUM	70.3	R	MC	Reading numerals, circling
APL	4.3	R	N	Oral story problems, 2 =< a + b =< 6
SUM	18.2	R/M	N	Vertical addition, 1 =< a + b =< 9
NUM	78.3	M	N	Counting pictures
NUM	81.3	M	O	Rote counting a0-b0, b =< 6, b = a + 1

Lesson 38

NUM	86.2	R	O	Counting sounds, n =< 7
SUM	19.1	R	O	Oral addition
NUM	73.4	R	N	Writing numerals from dictation, 0-9
NUM	90.1	R	MC	Less, 1-5
APL	4.4	R	N	Oral story problems, 2 =< a + b =< 6
NUM	76.2	R/M	N	Successors, 1-8
NUM	78.4	M	N	Counting pictures, 0-9
SUM	18.3	M	N	Vertical addition, 1 =< a + b =< 9

Lesson 39

NUM	91.1	R	O	Successors, 1-29
NUM	92.1	R	MC	More and less, 1-5
APL	4.5	R	N	Oral story problems, 2 =< a + b =< 6
APL	5.1	R	MC	Money, $1, $2, $5
NUM	66.6	R/M	N	Successors, 1-8
NUM	78.5	M	N	Counting pictures, 0-9
NUM	18.4	M	N	Vertical addition, 1 =< a + b =< 9
NUM	87.2	M	O	Rote counting, 1-60

Lesson 40

NUM	86.3	R	O	Counting sounds, n =< 7
NUM	81.4	R	O	Rote counting, a0 to b0, b =< 6, b = a + 1
BAS	4.2	R	O	Sufficiency
NUM	93.1	R	O	Successors, 1-29
APL	6.1	R	O	Oral subtraction problems, a - b, 1 =< b < a =< 5
SUM	19.2	R	O	Oral addition 2 =< a + b =< 9
SUM	20.1	R	O	Oral addition, a + 0, b + 0
APL	7.1	M	O	Money, playing store

Lesson 41

NUM	94.1	R	O	Successors 1-39
SUM	19.3	R	O	Oral addition, 2 =< a + b =< 9
NUM	79.3	R	N	Counting elements in a subset, n < m =< 9
TST	5.1	R	Var	Test
NUM	95.1	R	O,N	Reading and copying numerals, 10-13

NUM	96.1	R	O,MC	Reading numerals, 10-13
SUM	18.5	M	O,N	Vertical addition, 1 =< a + b =< 9, 0 =< a, b =< 9
NUM	81.5	M	O	Rote counting, a0-b0, b =< 7, b = a + 1
NUM	97.1	M	O	Counting objects, 1-20

Lesson 42

NUM	86.4	R	O	Counting sounds, 1-7
NUM	81.6	R	O	Rote counting, a0 ab0, b =< 7, b = a + 1
NUM	98.1	R	O	Greater and less, 1-5
SUM	19.4	R	O	Oral addition, 2 =< a + b =< 9
NUM	99.1	R	N	Writing numerals, 10-13, from dictation
APL	8.1	R	N	Oral story problems, addition
NUM	95.2	R/M	O,N	Reading and copying numerals, 10-13
SUM	18.6	M	N	Vertical addition, 1 =< a + b =< 9, 0 =< a, b =< 9
NUM	100.1	M	O	Reading numerals, 0-13, with cards

Lesson 43

APL	9.1	R	O	Oral story problems, addition and subtraction
NUM	101.1	R	MC	More and less, emphasis on zero
APL	10.1	R	MC	$1, $2, $5 bills, circling
SUM	21.1	R	N	Oral addition, 2 =< a + b =< 9, 1 =< a, b =< 5
NUM	99.2	R	N	Writing numerals from dictation, 10-13
NUM	96.2	R	MC	Reading numerals, 10-13
SUM	22.1	R	O,MC	Reading addition exercises
NUM	95.3	M	N	Copying numerals, 10-13
NUM	102.1	M	O	Rote counting 1-70
NUM	97.2	M	O	Counting objects, 1-20

Lesson 44

NUM	103.1	R	MC	Greater and less, 0-9
NUM	79.4	R	N	Counting elements in a subset, n < m =< 9
APL	11.1	R	MC	More and less, $1, $2, $5 bills
APL	8.2	R	N	Oral story problems, addition
NUM	104.1	R	MC	Reading numerals, 10-15
SUM	22.2	R	O,MC	Reading addition exercises
NUM	105.1	M	O	Reading numerals, 0-15, with cards
NUM	81.7	M	O	Rote counting, a0 ab0, b =< 7, b = a + 1

Lesson 45

NUM	94.2	R	O	Successors, 1-39
APL	9.2	R	O	Oral story problems, addition and subtraction

NUM	104.2	R	MC	Reading numerals, 10-15
NUM	106.1	R	N	Writing numerals, 10-15, from dictatior
NUM	107.1	R	MC	Greater and less, 0-9
SUM	21.2	R	N	Oral addition, 2 =< a + b =< 9, 1 =< a, b =< 5
APL	7.2	M	-	Playing store

Lesson 46

NUM	108.1	R	O	Successors, 1-49
TST	6.1	R	Var	Test
NUM	109.1	R	MC	Reading numerals, 0-9
NUM	107.2	R	MC	Greater and less, 0-9
NUM	110.1	R	MC	Reading numerals, 10-15
NUM	106.2	R	N	Writing numerals from dictation, 10-15
SUM	18.7	R/M	N	Vertical addition, 0 =< a + b =< 9
NUM	111.1	M	O	Counting objects, 1-30
NUM	112.1	M	O	Rote counting, 1-80
NUM	105.2	M	O	Reading numerals, 0-15, with cards

Lesson 47

APL	9.3	R	O	Oral addition and subtraction problems
NUM	113.1	R	O	Greater and less, 0-9
SUM	23.1	R	O	Oral addition, 1 =< a + b =< 9
NUM	108.2	R	O	Successors, 1-49
NUM	110.2	R	MC	Reading numerals, 10-15
NUM	114.1	R	N	Writing numerals from dictation, 0-15
APL	12.1	R	MC	Money, $1, $2, $5, $10 bills
NUM	115.1	R/M	N	Counting pictures 1-15
SUM	18.8	M	N	Vertical addition, 0 =< a + b =< 9
SUM	116.1	M	O	Counting objects, 1-30
NUM	117.1	M	O	Rote counting, a0-b0, a =< 7, b = a + 1

Lesson 48

RES	1.1	R	P,O	Preparation for subtraction, with bottle tops
NUM	118.1	R	MC	Greater and less, 10-15
NUM	119.1	R	MC	Reading numerals, 16-19
SUM	21.3	R	N	Oral addition, 1 =< a + b =< 9, 1 =< a + b =< 5
SUM	22.3	R	MC	Reading addition exercises
NUM	120.1	R	N	Counting sounds, 1-7
NUM	121.1	M	N	Writing numerals, 10-19, copying
APL	13.1	M	O	Money, playing store, $1, $2, $5, $10

Lesson 49

RES	1.2	R	P,O	Preparation for subtraction, with bottle tops

SUM	24.1	R	O	Oral addition, 2 =< n + 1 =< 29
NUM	119.2	R	MC	Reading numerals, 16-19
SUM	22.4	R	MC	Reading addition exercises
NUM	122.1	R	MC	Greater and less, 0-15
APL	11.2	R	MC	Greater and less with bills
NUM	115.2	R/M	N	Counting pictures, 1-15
SUM	18.9	M	N	Vertical addition, 1 =< a + b =< 9
NUM	123.1	M	O	Reading numerals, 0-19, with cards

Lesson 50

SUM	25.1	R	P,O	Oral addition, with fingers, 2 =< a + b =< 9, 1 =< a
NUM	86.5	R	O	Counting sounds, 1-7
NUM	124.1	R	MC	Reading numerals, 0-19
NUM	125.1	R	N	Writing numerals from dictation, 16-19
NUM	122.2	R	MC	More and less, 0-15
APL	14.1	R	N	Oral problems, addition and subtraction
SUM	18.1	R/M	N	Vertical addition, 1 =< a + b =< 9
NUM	117.2	M	O	Rote counting, a0 to b0, a =< 7, b = a + 1
NUM	112.2	M	O	Rote counting, 1-80
SUM	24.1.1	M	O	Oral addition, 2 =< n + 1 =< 29

Lesson 51

APL	9.4	R	O	Addition and subtraction problems
SUM	26.1	R	P,O	Oral addition, 1 =< a + b =< 11, with bottle tops
APL	15.1	R	MC	More and less, with bills
TST	7.1	R	Var	Test
NUM	115.3	R/M	N	Counting pictures, 1-15
SUM	27.1	M	N	Vertical addition, 0 =< a + b =< 9
NUM	123.2	M	O	Reading numerals, 0-19, with cards

Lesson 52

RES	1.3	R	P	Preparation for subtraction, 1 =< a - b =< 8, with bottle caps
NUM	126.1	R	N	Counting compliment of the subset, 1 =< n < m =< 9
NUM	124.2	R	MC	Reading numerals, 0-19
APL	15.2	R	MC	More and less with $1, $2, $5, and $10 bills
SUM	28.1	R	N	Oral addition, 1 =< a + b =< 9
NUM	127.1	R/M	N	Successors, 1-14
NUM	115.4	M	N	Counting pictures, 1-15
NUM	123.3	M	O	Reading numerals, 0-19, with cards
NUM	117.3	M	O	Rote counting, a0 to b0, a =< 7
SUM	24.3	M	O	Oral addition, 2 =< n + 1 =< 29

Lesson 53

SUM	29.1	R	P,O	Oral addition, a + b = 10, with fingers
NUM	124.3	R	MC	Reading numerals, 0-19
NUM	128.1	R	N	Successors, 1-14
NUM	122.3	R	MC	More and less, 0-15
NUM	129.1	R	N	Writing numerals from dictation, 0-19
APL	16.1	R/M	O,N	Value of 2 bills together
NUM	130.1	M	O	Rote counting, 1-100
NUM	131.1	M	P,O	Counting objects, 1-40
SUM	30.0.1	M	O	Oral addition, 10 + a

Lesson 54

SUM	30.1	R	O	Oral addition, 10 + a
NUM	133.1	R	O	Rote counting, a0 to b0, a =< 9
NUM	122.4	R	MC	More and less, 0-15
NUM	126.2	R	N	Counting compliment of the subset, 1 =< n =< m =< 9
APL	14.2	R	N	Addition and subtraction problems
NUM	129.2	R	N	Writing numerals from dictation, 0-19
APL	16.2	R/M	O,N	Value of 2 bills together, $1, $2, $5
NUM	130.2	M	O	Rote counting, 1-100
NUM	123.4	M	O	Reading numerals, 0-19, with cards

Lesson 55

APL	17.1	R	O	Days of the week
SUM	31.1	R	O	Oral addition, 1 =< a + b =< 9
NUM	132.1	R	O	Successors, 1-69
RES	1.4	R	P,O	Preparation for subtraction, 1 =< a - b =< 8, 2 =< a =< 9, with bottle caps
NUM	132.2	R	O	Successors, 1-69
SUM	24.2	R	O	Oral addition, n + 1, n =< 28
NUM	131.2	M	O	Counting objects, 1-40
APL	17.2	M	O	Days of the week
NUM	132.3	M	O	Successors, 1-69

Lesson 56

SUM	31.2	R	O	Oral addition, 1 =< a + b =< 9
NUM	134.1	R	MC	Reading numerals, 20-24
TST	8.1	R	Var	Test
APL	14.3	R	N	Addition and subtraction problems
NUM	115.5	R/M	N	Counting pictures, 1-15
NUM	135.1	M	O	Reading numerals, 0-24, with cards
NUM	130.3	M	O	Rote counting, 1-100
SUM	33.0.1	M	O	Oral addition, 16 =< a0 + b =< 29, 1 =< a =< 2

Lesson 57

NUM	136.1	R	O	Rote counting
RES	1.5	R	P,O	Preparation for subtraction, 1 =< a - b =< 8, 2 =< a =< 9, with bottle caps
NUM	137.1	R	MC	Reading numerals, 20-24
NUM	138.1	R	N	Writing numerals from dictation, 20-24
SUM	28.2	R	N	Oral addition, 1 =< a + b =< 9
SUM	32.1	R	N	Oral addition, 2 =< n + 1 =< 19
NUM	144.1	M	N	Counting pictures, n =< 19
NUM	139.1	M	N	Writing numerals, copying, 20-24
NUM	135.2	M	O	Reading numerals, 0-24, with cards
NUM	136.2	M	O	Rote counting

Lesson 58

NUM	136.3	R	O	Rote counting
SUM	33.1	R	O	Oral addition, 16 =< a0 + b =< 29
NUM	133.2	R	O	Rote counting, a0 to b0
NUM	137.2	R	MC	Reading numerals, 20-24
NUM	138.2	R	N	Writing numerals from dictation, 20-24
SUM	34.1	R	N	Oral addition, 10 + a
APL	16.3	R/M	N	Value of bills together, $1, $2, $5,
NUM	135.3	M	O	Reading numerals, 0-29, with cards
NUM	136.4	M	O	Rote counting,

Lesson 59

APL	9.5	R	O	Addition and subtraction problems
RES	2.1	R	P,O	Subtraction, 1 =< a =< 5, b = 1, with fingers
SUM	35.1	R	O	Oral addition, a0 + b, a =< 4
NUM	140.1	R	MC	Reading numerals, 25-29
NUM	138.3	R	N	Writing numerals from dictation, 20-24
APL	18.1	R	MC	More or less with bills, $1, $2, $5
APL	19.1	R/M	N	Value of bills together, $1, $2, $5
NUM	131.3	M	O	Counting objects, 1-40
NUM	141.1	M	O	Reading numerals, 0-29, with cards

Lesson 60

APL	17.3	R	O	Days of the week
NUM	126.3	R	N	Counting compliment of a subset, 1 =< N =< M =< 9
NUM	142.1	R	N	Writing numerals from dictation, 20-29
SUM	36.1	R	N	Oral addition, 16 =< a0 + b =< 29
NUM	122.5	R	MC	More and less than, 0-15
APL	19.2	R/M	N	Value of 2 to 10 bills together
NUM	115.6	M	N	Counting pictures, 1-15
NUM	143.1	M	N	Writing numerals, 20-29, copying
APL	17.4	M	O	Days of the week

Lesson 61

RES	3.1	R	P,O	Subtraction, 1 =< a - b =< 4, 1 =< a =< 5, with fingers
NUM	145.1	R	MC	More and less, 10-19
TST	9.1	R	Var	Test
NUM	147.1	R	N	Writing numerals from dictation, 10-29
NUM	146.1	R	MC	Reading numerals, 0-29
NUM	148.1	R/M	1	Counting pictures, 1-25
SUM	37.1	M		Oral addition, 10 + a, with materials
NUM	131.4	M	O	Counting objects, 1-40

Lesson 62

NUM	136.5	R	O	Rote counting
SUM	38.1	R	O	Oral addition, 10 + a, 20 + a
RES	3.2	R	P,O	Subtraction, a - b = 1, 1 =< a =< 5, with fingers
NUM	146.2	R	MC	Reading numerals, 0 - 29
NUM	147.2	R	N	Writing numerals from dictation, 10 - 29
NUM	149.1	R	MC	More and less, 0 - 19
RES	4.1	M	O	Subtraction, 1 =< a - b =< 4, 1 =< a =< 5, with materials
NUM	131.5	M	O	Counting objects, 1 - 40
NUM	136.6	M	O	Rote counting, with materials

Lesson 63

SUM	39.1	R	O	Oral addition, ab + 1, b =/ 9
NUM	150.1	R	MC	Preparation for fractions
NUM	146.3	R	MC	Reading numerals, 0-29
NUM	151.1	R	N	Successors, 1-28
NUM	152.1	R	MC	More and less, 20-29
NUM	148.2	R/M	N	Counting pictures, 1-25
SUM	27.2	M	N	Vertical addition, 0 =< a + b =< 9
NUM	136.7	M	O	Rote counting

Lesson 64

NUM	86.6	R	O	Counting sounds
NUM	153.1	R	O	More, 10-19
NUM	154.1	R	O	Successors, 1-98
RES	3.3	R	P,O	Oral subtraction, 1 =< a - b =< 4, 1 =< a =< 5, with fingers
NUM	155.1	R	O	More, 20-29
NUM	130.4	R	O	Rote counting, 1-100
RES	4.2	M	O	Oral subtraction, 1 =< a - b =< 4, 1 =< a =< 5, with materials
NUM	141.2	M	O	Reading numerals, 0-29, with cards
NUM	136.8	M	O	Rote counting

Lesson 65

NUM	86.7	R	O	Counting sounds, n =< 7
SUM	40.1	R	N	Oral addition, ab + 1, b =/ 9
NUM	156.1	R	MC	Preparation for fractions
RES	5.1	R	N	Oral subtraction, 1 =< a - b =< 4, 1 =< a =< 5
NUM	157.1	R	MC	More and less, 0-29
NUM	158.1	R/M	N	Successors, 1-28
SUM	27.3	M	N	Vertical addition, 0 =< a + b =< 9
NUM	141.3	M	O	Reading numerals, 0 - 29, with cards

Lesson 66

NUM	136.9	R	O	Rote counting
SUM	41.1	R	O	Oral addition, a0 + b, 1 =< a =< 4
NUM	159.1	R	MC	Preparation for fractions, 1/2 and 1/3
NUM	160.1	R	MC	Reading numerals
SUM	27.4	M	N	Vertical addition, 0 =< a + b =< 9
NUM	136.1	M	O	Rote counting
NUM	161.1	M	O	Counting objects, groups of 10

Lesson 67

RES	6.1	R	O	Oral subtraction, a - b = 1, 1 =< a =< 5, with fingers
SUM	41.2	R	O	Oral addition, a0 + b, 1 =< a =< 4
NUM	160.2	R	MC	Reading numerals
NUM	162.1	R	N	Writing numerals from dictation
RES	7.1	R	N	Oral subtraction, a - b = 1, 1 =< a =< 5
NUM	163.1	R	MC	Reading numerals
NUM	164.1	M	N	Writing numerals, copying
SUM	27.5	M	N	Vertical addition, 0 =< a + b =< 9
SUM	42.1	M	O	Oral addition, a0 + b, 1 =< a =< 4, with materials

Lesson 68

NUM	136.11	R	O	Rote counting
RES	8.1	R	O	Oral subtraction, 1 =< 5 - b =< 4, 1 =< b =< 4, with fingers
SUM	43.1	R	O	Oral addition, 10 =< a + b =< 11
RES	5.2	R	N	Oral subtraction, 1 =< a - b =< 4, 1 =< a =< 5
NUM	163.2	R	MC	Reading numerals
SUM	40.2	R	N	Oral addition, ab + 1, b =/ 9
NUM	165.1	M	N	Writing numerals, copying
NUM	148.3	M	N	Counting pictures, 1-25
SUM	44.1	M	N	Oral addition, 10 =< a + b =< 15, with materials

Lesson 69

RES	2.2	R	O	Oral subtraction, a - 1 = b, 1 =< a =< 5, with fingers
NUM	136.12	R	O	Rote counting
SUM	45.1	R	O	Oral addition, a9 + 1
RES	3.4	R	O	Oral subtraction, 1 =< a - b =< 4, 1 =< a =< 5, with fingers
NUM	154.2	R	O	Successors, 1-98
SUM	43.2	R	O	Oral addition, 10 =< a + b =< 11
RES	9.1	M	O	Oral subtraction, 1 =< a - b =< 4, 1 =< a =< 5, with bottle caps
SUM	42.2	M	O	Oral addition, a0 + b, 1 =< a =< 4, with materials
NUM	161.2	M	O	Counting objects, groups of 10

Lesson 70

RES	5.3	R	N	Oral subtraction, 1 =< a - b =< 5
SUM	46.1	R	N	Oral addition, a9 + 1
NUM	159.2	R	MC	Preparation for fractions, 1/2 and 1/3
NUM	166.1	R	MC	Reading numerals, 10, 20, . . . , 90
SUM	47.1	R	N	Oral addition, 10 =< a + b =< 11
NUM	151.2	R/M	N	Successors, 1-28
NUM	167.1	M	N	Writing numerals, copying, 10, 20, . . . , 90
NUM	136.13	M	O	Rote counting
SUM	44.2	M	O	Oral addition, 10 =< a + b =< 15, with materials

Lesson 71

NUM	136.14	R	O	Rote counting
RES	10.1	R	O	Oral subtraction, 1 =< a - 1 =< 8, 2 =< a =< 10, with fingers
SUM	48.1	R	O	Oral addition, 1 =< a + b =< 5
NUM	166.2	R	MC	Reading numerals, 10, 20, . . . , 90
NUM	159.3	R	MC	Preparation for fractions, 1/2, 1/3
TST	11.1	R	Var	Test
NUM	168.1	R	N	Writing numerals from dictation
NUM	158.2	M	N	Successors, 1-28
SUM	27.6	M	N	Vertical addition, 0 =< a + b =< 9
NUM	136.15	M	O	Rote counting

Lesson 72

SUM	49.1	R	O	Oral addition, 0 =< a + b =< 12
NUM	154.3	R	O	Successors, a9
SUM	45.2	R	O	Oral addition, a9 + 1
RES	10.2	R	O	Oral subtraction, 1 =< a - 1 =< 8, 2 =< a =< 10

NUM	169.1	R	O	Rote counting, N to M
APL	13.2	M	O	Playing store

Lesson 73

RES	10.3	R	P,O	Oral subtraction, 1 =< a - 1 =< 8, 2 =< a =< 10, with bottle caps
NUM	170.1	R	O	Counting sounds, n =< 15
NUM	166.3	R	MC	Reading numerals, 10, 20, . . . , 90
NUM	171.1	R	MC	Fractions, 1/2, 1/3
NUM	172.1	R	N	Writing numerals from dictation, 10, 20, . . . , 90
SUM	50.1	R	N	Oral addition, 0 =< a + b =< 12
NUM	173.1	R	N	Counting pictures, groups of 10
APL	19.3	R/M	N	Value of bills together, 2-10 bills
SUM	27.7	M	N	Vertical addition, 0 =< a + b =< 9
NUM	161.3	M	O	Counting objects, groups of 10
NUM	174.1	M	P,O	Preparation for fractions, dividing figures in half

Lesson 74

RES	11.1	R	O	Oral subtraction, a - b = 1, 2 =< a =< 10, with fingers
NUM	175.1	R	MC	Reading numerals, 30-39
NUM	171.2	R	MC	Fractions, 1/2, 1/3
RES	12.1	R	N	Oral subtraction, 1 =< a - 1 =< 8, 2 =< a =< 10
NUM	176.1	R	MC	Reading numerals, 30-39
NUM	173.2	R/M	N	Counting pictures, groups of 10
NUM	177.1	M	N	Writing numerals, copying, 30-39
SUM	44.3	M	O	Addition, 10 =< a + b =< 15, with materials
NUM	174.2	M	P,O	Preparation for fractions, dividing figures in thirds

Lesson 75

NUM	154.4	R	O	Successors, 1-98
NUM	178.1	R	MC	Reading numerals, 40-49
NUM	179.1	R	MC	Fractions, 1/2, 1/3
RES	5.4	R	N	Subtraction, 1 =< a - b =< 4, 1 =< a =< 5
NUM	180.1	R	MC	Reading numerals, 40-49
NUM	172.2	R	N	Writing numerals from dictation, 10, 20, . . . , 90
APL	19.4	R/M	N	Value of bills together, 2 to 10 bills
NUM	181.1	M	N	Writing numerals, copying, 40-49
NUM	161.4	M	O	Counting objects, groups of 10

Lesson 76

RES	13.1	R	P,O	Oral subtraction, a - b = 5, 1 =< a =< 10, with fingers
NUM	182.1	R	MC	Reading numerals, 50-59
TST	12.1	R	Var	Test
RES	14.1	R	N	Oral subtraction, a - b = 5, 1 =< a =<
RES	15.1	R	O,N	Vertical subtraction, 1 =< a - b =< 4, 1 =< a =< 5
NUM	183.1	R/M	N	Sequences, 1-10
NUM	173.3	M	N	Counting pictures, groups of 10
NUM	184.1	M	O	Reading numerals, 0-59, with cards

Lesson 77

RES	10.4	R	O	Oral subtraction, 1 =< a - 1 =< 8, 2 =< a =< 10
APL	17.5	R	O	Days of the week
NUM	185.1	R	MC	Reading numerals, 50-59
NUM	186.1	R	N	Writing numerals, 50-59, from dictation
NUM	172.2	R	MC	Fractions, 1/2, 1/3
RES	5.5	R	N	Oral subtraction, 1 =< a - b =< 4, 1 =< a =< 5
NUM	166.4	R	MC	Reading numerals, 10, 20, . . . , 90
APL	20.1	R/M	N	Value of groups of bills
APL	17.6	M	O	Days of the week
NUM	161.5	M	O	Counting, 10, 20, 30, 40, 50, with materials

Lesson 78

RES	16.1	R	O	Oral subtraction, 5 =< a - b =< 8, 6 =< a =< 10, with bottle caps
NUM	166.5	R	MC	Reading numerals, 10, 20, . . . , 90
NUM	172.3	R	N	Writing numerals from dictation, 10, 20, . . . , 90
NUM	185.2	R	MC	Reading numerals, 50-59
NUM	187.1	R	MC	Fractions, 1/2, 1/3, 1/4
RES	15.2	R	N	Vertical subtraction, 1 =< a - b =< 4, 1 =< a =< 5
NUM	173.4	M	N	Counting pictures, groups of 10
RES	15.3	M	N	Vertical subtraction, 1 =< a - b =< 4, 1 =< a =< 5
NUM	174.3	M	P,O	Fractions, counting figures in thirds and fourths

Lesson 79

NUM	188.1	R	N	Writing numerals, 50-59, from dictation
RES	16.2	R	P,O	Oral subtraction, 5 =< a - b =< 8, 6 =< a =< 10, with bottle caps

NUM	189.1	R	O	Rote counting, by 2's, 2-10
APL	17.7	R	O	Order of days of the week
SUM	51.1	R	O	Oral addition, 0 =< N + 1 =< 99
SUM	52.1	R	O	Oral addition, 0 =< a + b =< 13
RES	16.3	R	O	Oral subtraction, 5 =< a - b =< 8, 6 =< a =< 10
NUM	189.2	M	O	Rote counting, by 2's, 2-10
NUM	184.2	M	O	Reading numerals, 0-59, with cards

Lesson 80

RES	16.4	R	O	Oral subtraction, 5 =< a - b =< 8, 6 =< a =< 10
NUM	190.1	R	MC	Reading numerals, 60-69
SUM	53.1	R	N	Oral addition, a0 + b
NUM	172.4	R	N	Writing numerals from dictation, 10, 20, . . . , 90
RES	17.1	R	N	Oral subtraction, 5 =< a - b =< 8, 6 =< a =< 10
NUM	183.2	R/M	N	Sequences, 1-10
RES	15.4	M	N	Vertical subtraction, 1 =< a - b =< 4, 1 =< a =< 5
APL	21.1	M	O	Order of days of the week
NUM	191.1	M	O	Reading numerals, 60-69, with cards

Lesson 81

RES	18.1	R	O	Oral subtraction, 5 =< a - b =< 8, 6 =< a =< 10
SUM	52.2	R	N	Oral addition, 0 =< a + b =< 13
NUM	192.1	R	MC	Reading numerals, 0-69
TST	13.1	R	Var	Test
RES	19.1	R	N	Vertical subtraction, 1 =< a - 1 =< 8
RES	20.1	R	MC	Reading subtraction exercises
NUM	183.3	R/M	N	Sequences, 1-50
RES	21.1	M	N	Vertical subtraction, 5 =< a - b =< 9, 6 =< a =< 9
NUM	193.1	M	O	Reading numerals, 0-69, with cards

Lesson 82

RES	22.1	R	P,O	Oral subtraction, 1 - b = 0, 1 =< a =< 10, with bottle caps
NUM	194.1	R	O	Successors, a9
NUM	195.1	R	O	Predecessors, 2-9
MEZ	1.1	R	O,N	Vertical addition and subtraction
NUM	196.1	R	O	Counting by 10's, 10-60
NUM	197.1	M	N	Successors, 1-38
NUM	198.1	M	N	Successors, 1-50
NUM	173.5	M	N	Counting by 10's, 10-60

Lesson 83

NUM	154.5	R	O	Successors, 1-99
APL	22.1	R	O	More and less, units of time
RES	22.2	R	O	Oral subtraction, 1 - b = 0, 1 =< a =<
NUM	195.2	R	O	Predecessors, 2-9
SUM	54.1	R	O	Oral addition, 0 =< a + b =< 14
NUM	199.1	R	O	Rote counting, by 2's, 2-20
RES	23.1	R	P,O	Oral subtraction, 0 =< a - b =< 4, 1 =< a =< 5, with fingers
APL	22.1	M	O	More and less, units of time
NUM	199.2	M	O	Rote counting, by 2's, 2-20
NUM	193.2	M	O	Reading numerals, 0-69, with cards

Lesson 84

RES	24.1	R	O	Oral subtraction, 1 =< a - 0 =< 9
NUM	200.1	R	MC	Reading numerals, 70-79
MEZ	1.2	R	N	Vertical addition and subtraction
NUM	187.2	R	MC	Fractions, 1/2, 1/3, 1/4
RES	25.1	R	N	Oral subtraction, 0 =< a - b =< 4, 1 =< a =< 5
RES	21.2	M	O,N	Vertical subtraction, 5 =< a - b =< 9, 6 =< a =< 9
NUM	173.6	M	N	Counting by 10's, 10-60
NUM	201.1	M	O	Reading numerals, 60-79, with cards

Lesson 85

RES	26.1	R	O	Oral subtraction, a - 0 a - a, 1 =< a =< 10
NUM	201.1	R	N	Writing numerals from dictation, 0-69
SUM	53.2	R	N	Oral addition, a0 + b
NUM	202.1	R	MC	Reading numerals, 0-79
NUM	203.1	R	N	Writing numerals from dictation, 0-79
SUM	40.3	R	N	Oral addition, 0 =< N + 1 =< 29
NUM	187.3	R	MC	Fractions, 1/2, 1/3, 1/4
MEZ	1.3	R/M	N	Vertical addition and subtraction
NUM	197.2	M	N	Successors, 1-38
NUM	199.3	M	O	Rote counting, by 2's, 2-20

Lesson 86

RES	27.1	R	P,O	Oral subtraction, 0 =< 6 - a =< 6, with bottle caps
NUM	204.1	R	MC	Reading numerals, 80-89
MEZ	2.1	R	MC	Reading addition and subtraction exercises
NUM	205.1	R	MC	Reading numerals, 80-89
TST	14.1	R	Var	Test

NUM	206.1	M	N	Successors, 1-48
MEZ	1.4	M	N	Vertical addition and subtraction, 0 =< a + b =< 9

Lesson 87

SUM	55.1	R	N	Oral addition, 0 =< N + 1 =< 49
NUM	194.2	R	O	Successors, a9
NUM	195.3	R	O	Predecessors, 2-9
RES	28.1	R	O	Oral subtraction, 0 =< 7 - b =< 7
APL	23.1	R	O	Oral fraction problems
MEZ	3.1	R	O	Oral addition and subtraction, 0 =< a + b =< 15, 0 =< a - b =< 16, 0 =< a =< 6
NUM	194.3	M	O	Succesors, a9
SUM	27.8	M	N	Vertical addition, 0 =< a + b =< 9
APL	24.1		P,O	Making change of $10

Lesson 88

APL	205.1	R	MC	Identifying bills, $20, $50, $2, $5, $10
NUM	207.1	R	N	Writing numerals from dictation, 0-89
NUM	208.1	R	MC	Reading numerals, 90-99
NUM	209.1	R	N	Shading part of a figure, 1/2, 1/3, 1/4
RES	29.1	R	N	Vertical subtraction, 0 =< 4 - a =< 3, a =/ 0
NUM	210.1	R/M	N	Sequences of 10
RES	30.1	M	N	Vertical subtraction, 0 =< a - b =< 4, 1 =< a =< 5, b =/ 0
NUM	211.1	M		Reading numerals, 0-99, with cards

Lesson 89

RES	31.1	R	O	Oral subtraction, 0 =< a - b =< 7, 0 =< a =< 7
NUM	212.1	R	MC	Reading numerals, 0-99
SUM	56.1	R	N	Horizontal addition, 0 =< a + b =< 9
NUM	213.1	R	N	Predecessors, 1-9
NUM	214.1	R	N	Counting pictures, groups of 10, 10-50
MEZ	4.1	R/M	N	Vertical addition and subtraction
NUM	211.2	M	O	Reading numerals, 0-99
APL	26.1	M	O	Months of the year
APL	27.1	M	P,O	Bills, $20, $50, $10

Lesson 90

RES	32.1	R	O	Oral subtraction, 0 =< 8 - b =< 8
RES	33.1	R	N	Oral subtraction, 0 =< 7 - b =< 7
NUM	213.2	R	N	Predecessors, 2-9
NUM	215.1	R	N	Writing numerals from dictation, 0-99
SUM	56.2	R	N	Horizontal addition, 0 =< a + b =< 9

NUM	210.2	R/H	N	Sequences of 10
RES	34.1	H	N	Vertical subtraction, 5 =< a - b =< 9, 5 =< a =< 9
NUM	206.2	H	N	Successors, 1-48

Lesson 91

SUM	57.1	R	O	Oral addition, 0 =< a + b =< 18
TST	15.1	R	Var	Test
NUM	216.1	R	MC	Reading numerals, 0-100
RES	35.1	R	N	Oral subtraction, 0 =< 8 - b =< 8
NUM	217.1	R	N	Writing numerals from dictation, 0-100
SUM	58.1	R	O,N	Horizontal addition, 0 =< N + 1 =< 49
NUM	218.1	R	MC	More and less, 0-100
HEZ	3.2	H	N	Vertical addition and subtraction a + b =< 15, a - b =< 9
NUM	219.1	H	N	Sequences, by 2's, 2-10
NUM	220.1	H	O	Reading numerals, 0-100, with cards

Lesson 92

APL	14.4	R	O	Oral addition and subtraction problems
APL	26.2	R	O	Months of the year
NUM	199.4	R	O	Rote counting, by 2's, 2-20
NUM	221.1	R	O	Predecessors, 2-12
SUM	58.1	R	O	Oral addition with 3 addends, a + b + c =< 10
APL	26.3	H	O	Months of the year
NUM	199.5	H	O	Rote counting, by 2's, 2-20
RES	34.2	H	N	Vertical subtraction, 0 =< a - b =< 9

Lesson 93

APL	26.4	R	O	Months of the year
NUM	221.2	R	O	Predecessors, 2-12
SUM	59.1	R	N	Vertical addition, a0 + b
NUM	209.2	R	N	Shading part of a figure, 1/2, 2/3, 3/4
NUM	216.2	R	MC	Reading numerals, 0-100
NUM	222.1	R	N	Counting by 10's, 10-50
NUM	198.2	R/H	N	Sequences
NUM	223.1	H	N	Successors, 1-68
NUM	210.3	H	N	Sequences, by 10's, 10-100
NUM	220.2	H	O	Reading numerals, 0-100, with cards

Lesson 94

RES	36.1	R	O	Oral subtraction, 0 =< a - b =< 8
APL	9.6	R	O	Oral addition and subtraction problems
NUM	213.3	R	N	Predecessors, 2-9
NUM	217.2	R	N	Writing numerals from dictation, 0-100

SUM	60.1	R	O,N	Vertical addition, ab + cd, 0 =< b + c =< 9
NUM	222.2	R/M	O,N	Counting by 10's, 10-50
SUM	60.2	M	P,O	Vertical addition, ab + cd, 0 =< b + c =< 9, with materials

Lesson 95

RES	37.1	R	O	Oral subtraction, ab - 1
APL	14.5	R	O	Oral addition and subtraction story problems
SUM	59.2	R	O,N	Horizontal addition, a0 + b
NUM	224.1	R	D	Shading in part of a figure, 1/2, 2/3, 3/4
NUM	225.1	R	N	Successors, a9
MEZ	5.1	R	N	Oral addition and subtraction, a + b =< 15, a - b =< 9
NUM	219.2	M	N	Sequences, by 2's, 2-10
NUM	226.1	M	N	Predecessors, 2-9
MEZ	6.1	M	N	Vertical addition and subtraction, a + b =< 15, a - b =< 9

Lesson 96

SUM	62.1	R	O	Oral addition, a + b + c =< 12
NUM	227.1	R	O	Rote counting, by 2's, 2-50
RES	37.2	R	O	Oral subtraction, ab - 1
NUM	216.2	R	O,MC	Reading numerals, 0-100
RES	38.1	R	N	Horizontal subtraction, a - b >= 9
TST	16.1	R	Var	Test
NUM	228.1	M	N	Predecessors, 2-12
SUM	56.3	M	N	Horizontal addition, 0 =< a + b =< 9
NUM	220.3	M	O	Reading numerals, 0-100, with cards

Lesson 97

RES	39.1	R	O	Oral subtraction, ab - b
NUM	229.1	R	O	Predecessors, 2-20
NUM	230.1	R	O	Which is more, 0-50
APL	26.5	R	O	Months of the year
SUM	62.1	R	O	Oral addition, a + b + c =< 12
NUM	227.2	R	O	Rote counting, by 2's, 2-20
APL	26.6	R	O	Months of the year
NUM	220.4	M	O	Reading numerals, 0-100, with cards

Lesson 98

NUM	231.1	R	O,MC	Ordinals, 1st, 2nd, 3rd
NUM	232.2	R	O,MC	More and less, 0-99
NUM	233.1	R	N	Predecessors, 2-12
NUM	217.3	R	M	Writing numerals from dictation, 0-99

SUM	63.1	R/M	O,N	Horizontal addition, ab + 1
NUM	234.1	M	N	Sequences, by 2's, 2-20
SUM	56.4	M	N	Horizontal addition, 0 =< a + b =< 9
SUM	64.1	M	O	Oral addition, a0 + b, with materials

Lesson 99

NUM	229.2	R	O	Predecessors, 2-20
SUM	61.3	R	N	Vertical addition, ab + cd, a + b =< 9
NUM	235.1	R	MC	Fractions 1/2, 1/3
SUM	60.3	R	O,N	Oral addition, a0 + b
APL	28.1	R	MC	Identifying bills, $10, $20, $50, $100
NUM	38.2	R/M	N	Horizontal subtraction, a - b =< 9
NUM	234.2	M	N	Sequences, by 2's, 2-20
APL	29.1	M	N	Value of bills together, a0 + b
NUM	236.1	M	N	Successors, 1-98
NUM	237.1	M	O	Ordinals, 1st to 3rd

Lesson 100

SUM	60.4	R	N	Oral addition, a0 + b
NUM	238.1	R	O,MC	Fractions, reading 1/2, 1/3
NUM	239.1	R	O,N	Counting by 10's, 10-90
MED	1.1	R	O	Measuring from 1 to 10 cm
APL	29.2	R/M	N	Value of 2 bills together
RES	38.3	M	N	Horizontal subtraction, a - b =< b
SUM	64.1	M	O	Oral addition, a0 + b, with materials

Lesson 101

RES	37.3	R	O	Oral subtraction, ab - 1
NUM	240.1	R	O	Predecessors, 2-50
NUM	241.1	R	O	Successors, a9
TST	17.1	R	Var	Test
NUM	242.1	R	MC	Fractions, reading 1/2, 1/3, 1/4
SUM	65.1	R	N	Vertical addition, ab + c0, a + c =< 9
APL	1.2	R/M	O	Measuring from 1 to 10 cm
NUM	243.1	M	N	Predecessors, 2-20
SUM	60.5	M	N	Horizontal addition, a0 + b

Lesson 102

NUM	224.1	R	O	Less, 0-70
NUM	240.2	R	O	Predecessors, 2-50
APL	30.1	R	O	Oral money problems, how much change
NUM	245.1	R	O	Rote counting, by 5's, 5-50
SUM	62.3	R	O	Oral addition, with 2 or 3 addends
NUM	241.2	R	O	Successors, a9
RES	39.2	R	O	Oral subtraction, ab - b
NUM	220.5	M	O	Reading numerals from cards, 0-100

APPENDIX F

Lesson 103

NUM	245.2	R	O	Rote counting, by 5's, 5-50
RES	39.3	R	O	Oral subtraction, ab - b
SUM	66.1	R	O	Oral addition, a0 + b
NUM	246.1	R	MC	Ordinals, 1st to 5th
NUM	242.2	R	MC	Fractions, reading 1/2, 1/3, 1/4
NUM	232.2	R	MC	More and less, 0-100
NUM	247.1	R	Mc	Circle a group of 10 out of N, 11 =< N =< 19
RES	38.4	M	N	Horizontal subtraction, 0 =< a - b =< 9
SUM	67.1	M	N	Horizontal addition, 0 =< a + b =< 12
NUM	248.1	M	N	Successors, a9

Lesson 104

APL	14.6	R	O	Oral addition and subtraction
NUM	62.4	R	O	Oral addition, with 2 to 3 addends
NUM	246.2	R	MC	Ordinals, 1st to 5th
NUM	224.2	R	D	Shading in various parts of figures
SUM	68.1	R	N	Vertical addition, ab + cd, b + d =< 9
NUM	249.1	R	N	Writing fractions, copying, 1/2, 1/3, 1/4
NUM	239.2	R	N	Counting 10's, 10-90
SUM	68.2	R/M	N	Vertical addition, ab + cd, b + d =< 9
NUM	220.6	M	O	Reading numerals from cards, 0-100

Lesson 105

RES	37.4	R	O	Oral subtraction, ab - a
APL	30.2	R	O	Oral money problems, how much change
NUM	239.3	R	N	Counting 10's, 10-90
NUM	224.3	R	D	Shading in various parts of figures
NUM	247.2	R	MC	Circle a group of 10 out of N, 11 =< N =< 19
RES	38.5	R/M	N	Horizontal subtraction, 0 =< a - b =< 9
SUM	67.2	R/M	N	Horizontal addition, 0 =< a + b =< 12
NUM	249.2	M	N	Writing fractions, copying, 1/2, 1/3, 1/4
MED	1.3	M	O	Measuring 1 to 10 cm

Lesson 106

RES	40.1	R	N	Vertical subtraction, ab - cd >= 10
APL	31.1	R	MC	Money, $5, $10, $25, $50
NUM	232.3	R	MC	More and less, 0-100
SUM	69.1	R	N	Horizontal addition, a + b + c =< 9
TST	18.1	R	Var	Test
NUM	236.2	M	N	Successors, 1-98
SUM	27.9	M	N	Vertical addition, a + b =< 9
RES	41.1	M	N	Vertical subtraction, a - b =< 9

Lesson 107

SUM	71.1	R	O	Addition with objects, a + b + c =< 15
SUM	70.1	R	O	Oral addition, a + b =< 15
RES	42.1	R	O	Oral subtraction, 0 =< a - b =< 9
NUM	245.3	R	O	Rote counting, by 5's, 5-50
NUM	240.3	R	O	Predecessors, 2-50
RES	42.2	R	O	Oral subtraction, a - b =< 9
APL	9.7	R	O	Oral story problems, addition and subtraction
NUM	249.3	M	N	Writing fractions, copying, 1/2, 1/3, 1/
NUM	245.4	M	O	Rote counting, by 5's, 5-50

Lesson 108

SUM	72.1	R	N	Vertical addition, a + b + c =< 9
NUM	250.1	R	N	Counting by 2's
MED	2.1	R	O,N	Measuring with a ruler, 1-10 cm
RES	40.2	R	N	Vertical subtraction, ab - cd >= 10
APL	32.1	R	N	Value of money, addition
NUM	247.3	R	N	Circle a group of 10 out of N, 11 =< N =< 19
SUM	62.2	M	N	Horizontal addition, a + b + c =< 9
SUM	72.2	M	N	Vertical addition, a + b + c =< 9

Lesson 109

NUM	251.1	R	O	More and less, 0-80
SUM	62.5	R	O	Oral addition with 2 or 3 addends, a + b + c =< 12
NUM	252.1	R	O	Predecessors, a0 to 50
SUM	70.2	R	O	Oral addition, a + b =< 15
RES	42.3	R	O	Oral subtraction, 0 =< a - b =< 9
RES	42.2	R	O	Oral subtraction, a - b =< 9
NUM	241.3	R	O	Successors, 99
NUM	253.1	M	O	Ordinals 1st to 5th
SUM	73.1	M	N	Horizontal addition, a + b =< 15
RES	38.6	M	N	Horizontal subtraction, a - b =< 9

Lesson 110

NUM	225.1	R	MC	Fractions, reading 1/2, 1/3, 1/4
SUM	27.1	R	N	Vertical addition, a + b =< 9
RES	41.2	R	N	Vertical subtraction, a - b =< 9
NUM	247.4	R	N	Circle a group of 10 out of N, 11 =< N =< 19
NUM	265.2	R	MC	Which part of the figure is shaded, 1/2, 1/3, 1/4
MED	2.2	R	O,N	Measuring with a ruler 1-10 cm
SUM	73.2	R/M	N	Horizontal addition, a + b =< 15
RES	38.7	R/M	N	Horizontal subtraction, a - b =< 15

NUM	256.1	M	N	Predecessors of 2-50
NUM	249.4	M	N	Writing fractions, copying, 1/2, 1/3, 1/4

Lesson 111

NUM	252.2	R	O	Predecessors, a0
APL	33.1	R	O	Description of the face of a clock
NUM	257.1	R	MC	Selecting a figure divided in 1/2, 1/3, 1/4
TST	19.1	R	Var	Test
Res	43.1	R	N	Vertical subtraction, a0 - b0
NUM	247.5	R/M	N	Circling 10's, 11 =< N =< 19
NUM	258.1	M	N	Sequences, by 5's, 5-50
SUM	73.3	M	N	Horizontal addition, a + b =< 15
RES	38.8	M	N	Horizontal subtraction, a - b =< 9

Lesson 112

SUM	71.2	R	O	Addition with objects, a + b + c =< 15
NUM	259.1	R	O	More and less, 0-99
SUM	74.1	R	O	Oral addition, a + b =< 9
RES	43.1	R	O	Oral subtraction, a - b =< 9
NUM	154.6	R	O	Successors, 1-98
NUM	260.1	R	O	Predecessors, 2-99
SUM	62.6	R	O	Oral addition with 2 or 3 addends, a + b + c
RES	42.5	R	O	Oral subtraction, a - b =< 9
APL	43.1	M	P,O	Playing store or bank, with money
NUM	253.2	M	O	Ordinals, 1st to 5th

Lesson 113

NUM	154.7	R	O	Successors, 1-98
NUM	260.2	R	O	Predecessors, 2-99
APL	35.1	R	O	Clock, hours
NUM	262.1	R	MC	Circling the fraction that represents the shaded part
SUM	68.3	R	N	Vertical addition, ab + cd, b + d =< 9
RES	40.3	R	N	Vertical subtraction, ab - cd >= 10
NUM	261.1	R	MC	Fractions, reading 1/2, 1/3, 1/4
SUM	75.1	R/M	N	Horizontal addition, a + b + c =< 12
NUM	263.1	M	N	Predecessors, a0 to 50
RES	38.9	M	N	Horizontal subtraction, a - b =< 9

Lesson 114

NUM	259.2	R	O	More and less, 0-99
SUM	68.4	R	N	Vertical addition, ab + cd, b + d =< 9
RES	40.4	R	N	Vertical subtraction, ab - cd >= 10
NUM	257.2	R	MC	Selecting the figure divided in 1/2, 1/3, 1/4

RES	44.1	R	N	Oral subtraction, a - b =< 9
MED	2.3	R	N	Measuring with a ruler 1-10 cm
NUM	264.1	R	MC	Fractions, reading 1/2, 1/3, 1/4
NUM	266.2	R/M	N	Circling 10's, a0 + b
SUM	73.4	M	N	Horizontal addition, a + b =< 15
APL	36.2	M	N	Value of money, addition

Lesson 115

SUM	74.2	R	O	Oral addition, a + b =< 9
RES	43.2	R	O	Oral subtraction, a - b =< 9
APL	36.1	R	N	Value of money, addition
NUM	232.4	R	MC	More and less, 0-100
NUM	267.1	R	N	Counting by 5's, 5-50
NUM	262.2	R	MC	Fractions, reading 1/2, 1/3, 1/4
MED	2.4	R/M	O,N	Measuring with a ruler 1-10 cm
NUM	236.3	M	N	Successors, 1-98
NUM	268.1	M	N	Circling 10's, 11 =< N =< 19

Lesson 116

SUM	76.1	R	O	Oral addition, a + 0, 0 + b
SUM	77.1	R	O	Oral addition, a + b, emphasis on sums greater than 10
SUM	78.1	R	O	Oral addition, a + b + c, a + b =< 10
SUM	79.1	R	N	Vertical addition, ab + cd
SUM	80.1	R/M	N	Horizontal addition, a + b, emphasis on a + 0, 0 + a
NUM	270.1	M	N	Counting, by 10's
NUM	271.1	M	O	Counting objects, by 10's
RES	48.0	R	O	Oral subtraction, ab - 1, b =/ 0

Lesson 117

RES	47.1	R	O	Oral subtraction, a - b, a - 0
RES	48.1	R	O	Oral subtraction, ab - 1, b =/ 0
SUM	77.2	R	O	Oral addition, a + b, emphasis on sums greater than 10
SUM	80.2	R	N	Horizontal addition, a + b, emphasis on a + 0, 0 + a
SUM	79.2	R/M	N	Vertical addition, ab + cd
SUM	81.1	M	N	Vertical addition, ab + cd
SUM	81.2	M	N	Vertical addition, ab + cd
SUM	81.3	M	N	Vertical addition, ab + cd
NUM	271.2	M	O	Counting objects by 10's

Lesson 118

SUM	76.2	R	O	Oral addition, a + b, a + 0, 0 + b
RES	47.2	R	O	Oral subtraction, a - b, a - 0
SUM	82.1	R	O	Oral addition, ab + 1, b =/ 9

SUM	78.2	R	O	Oral addition, a + b + c, a + b =< 10
SUM	83.1	R	N	Oral addition, a + b, emphasis on sums greater than 10
NUM	272.1	R	N	Counting a0 + 1 objects
SUM	84.1	R/M	N	Vertical addition, ab + cd, emphasis on zeros
SUM	85.1	M	N	Vertical addition, ab + cd
NUM	273.1	M	O	Counting a0 + 1 objects

Lesson 119

RES	49.1	R	O	Oral subtraction, a - b, a - a
SUM	82.2	R	O	Oral addition, ab + 1, b =/ 9
RES	46.2	R	O	Subtraction, ab - 1, b =/ 0
SUM	83.2	R	N	Oral addition, a + b, emphasis on sums greater than 10
NUM	274.1	R	N	Counting, a0 + b
SUM	86.1	R	N	Oral addition, a + b + c, a + b =< 10
APL	39.1	R/M	N	Value of money, addition
SUM	85.2	M	N	Vertical addition, ab + cd
SUM	81.4	M	N	Vertical addition, ab + cd

Lesson 120

RES	50.1	R	O	Oral subtraction, a - b, a - a, a - 0
SUM	87.1	R	O	Oral addition, a + b + c, a + b =< 10, emphasis on sums > 10
NUM	275.1	R	O	Successors and predecessors, ab
NUM	276.1	R	O	More and less
NUM	277.1	R	MC	More and less, with bills
APL	40.1	R	MC	Clock, hours
APL	39.2	R/M	N	Value of money, addition
SUM	85.3	M	N	Vertical addition, ab + cd
SUM	81.5	M	N	Vertical addition, ab + cd

Lesson 121

SUM	88.1	R	O	Oral addition, a + b, a + 0, 0 + b
RES	51.1	R	O	Oral subtraction, a - b, a - a, a - 0
RES	52.1	R	N	Vertical subtraction, a - 0, a - a
RES	53.1	R	N	Horizontal subtraction, a - b, emphasis on a - a and a - 0
RES	54.1	R	N	Oral subtraction, ab - 1, b =/ 0
SUM	83.3	R	N	Oral addition, a + b, emphasis on sums > 10
NUM	274.2	R	N	Counting 20 + b
SUM	85.4	M	N	Vertical addition, ab + cd
SUM	81.6	M	N	Vertical addition, ab + cd
MED	3.1	M	O	Measuring length

Lesson 122

SUM	88.2	R	O	Oral addition, a + b, a + 0, 0 + b
RES	50.2	R	O	Oral subtraction, a - b, a - a, a - 0
SUM	89.1	R	O	Oral addition, a9 + 1
SUM	87.2	R	O	Oral addition, a + b + c, a + b =< 10, emphasis on sums > 10
NUM	275.2	R	O	Successors and Predecessors of ab
NUM	276.2	R	O	More and less
NUM	277.2	R	MC	More and less, with bills
APL	40.2	R	MC	Clock, hours
APL	39.3	M	N	Value of money, addition
SUM	85.5	M	N	Vertical addition, ab + cd
MED	4.1	M	O,N	Measuring with a ruler, 1-10 cm

Lesson 123

RES	55.1	R	N	Vertical subtraction, ab - cd
SUM	90.1	R	N	Oral addition, a + b, a + 0, 0 + b
RES	56.1	R	N	Oral subtraction, a - b, a - a, a - 0
RES	57.1	R	N	Vertical subtraction, a - b, emphasis on a - 0, a - a
RES	53.2	R	N	Horizontal subtraction, a - b, emphasis on a - a and a - 0
SUM	91.1	R	N	Oral addition, ab + 1
SUM	92.1	R	N	Oral addition, a + b, emphasis on sums greater than 10
RES	58.1	R	N	Oral subtraction, a - b
MED	3.2	M	O	Measuring length, cm

Lesson 124

SUM	77.3	R	O	Oral addition, a + b, emphasis on sums greater than 10
RES	55.2	R	N	Vertical subtraction, ab - cd
SUM	90.2	R	N	Oral addition, a + b, a + 0, 0 + b
RES	56.2	R	N	Oral subtraction, a - b, a - a, a - 0
RES	57.2	R	N	Vertical subtraction, a - b, emphasis on a - 0 and a - a
SUM	91.2	R	N	Oral addition, ab + 1
RES	46.3	R	N	Oral subtraction, ab - 1, b =/ 0
NUM	278.1	R	N	Counting a0 + 1, a0 + 2
RES	59.1	R/M	N	Horizontal subtraction, emphasis on a - a and a - 0
RES	60.1	M	N	Vertical subtraction, ab - cd
MED	3.3	M	O	Measuring length, cm

Lesson 125

SUM	77.4	R	O	Oral addition, a + b, emphasis on sums greater than 10

RES	61.1	R	O	Oral subtraction, a - b
SUM	93.1	R	O	Oral addition, a0 + 1, 2 =< a =< 9
SUM	78.3	R	O	Oral addition, a + b + c, a + b =< 10, emphasis on sums > 10
SUM	94.1	R	N	Vertical addition, a + b, emphasis on a + 0 and 0 + b
RES	57.3	R	N	Vertical subtraction, a - b, emphasis on a - 0 and a - a
SUM	80.3	R	N	Horizontal addition, a + b, emphasis on a + 0 and 0 + a
RES	59.2	R	N	Horizontal subtraction, a - b, emphasis on a - a and a - 0
NUM	278.3	R	MC	More and less with bills
RES	55.3	M	N,O	Vertical subtraction, ab - cd
MED	4.2	M	N	Measuring with a ruler, 1-10 cm

Lesson 126

SUM	95.1	R	O	Oral addition, a0 + b, b = 1 or 2, 2 =< a =< 9
SUM	78.4	R	O	Oral addition, a + b + c, a + b =< 10, emphasis on sums > 10
APL	36.1	R	O	Oral money problems
RES	62.1	R	N	Vertical subtraction, ab - cd, emphasis on b = d and d = 0
SUM	80.4	R	N	Horizontal addition, a + b, emphasis on a + 0 and 0 + a
RES	59.3	R	N	Horizontal subtraction, emphasis on a - a and a - 0
SUM	92.2	R	N	Oral addition, a + b, emphasis on sums > 10
APL	40.3	R/M	N	Clock, hours
RES	55.4	M	N	Vertical subtraction, ab - cd
RES	63.1	M	N	Vertical subtraction, a - b

Lesson 127

SUM	95.2	R	O	Oral addition, a0 + b, b = 1 or 2, 2 =< a =< 9
RES	62.2	R	N	Vertical subtraction, ab - cd, emphasis on b = d and/or d = 0
SUM	83.4	R	N	Oral addition, a + b, emphasis on sums > 10
RES	58.2	R	N	Oral subtraction, a - b
NUM	279.1	R	N	Counting a0 + b
NUM	294.1	R	N	Successors and Predecessors
NUM	281.1	R	N	More and less
RES	64.1	M	N	Vertical subtraction, ab - cd
RES	63.2	M	N	Vertical subtraction, a - b
MED	3.4	M	O	Measuring length, cm

Lesson 128

SUM	77.5	R	O	Oral addition, a + b, emphasis on sums > 10
SUM	96.1	R	O	Oral addition, 20 + b
NUM	282.1	R	O	Successors and predecessors
NUM	283.1	R	O	More and less
NUM	284.1	R	O	Successors and predecessors
SUM	97.1	R	N	Horizontal addition, a + b + c
APL	41.1	R	MC	More and less with money
NUM	279.1	R/M	N	Counting a0 + b
RES	64.2	M	N	Vertical subtraction, ab - cd
RES	65.1	M	N	Vertical subtraction, a - b

Lesson 129

SUM	77.6	R	O	Oral addition, a + b, emphasis on sums > 10
RES	61.2	R	O	Oral subtraction, a - b
NUM	284.2	R	O	Successor and predecessor of N
SUM	98.1	R	O	Oral addition, 30 + b
NUM	285.1	R	O,MC	Successor and predecessor, of N
SUM	99.1	R	N	Vertical addition, a + b + c =< 6, introduction, reading
APL	41.2	R	MC	More and less with money
SUM	100.1	R/M	N	Vertical addition, ab + cd
SUM	60.1	R/M	N	Vertical subtraction, ab - cd, emphasis on + and - signs
RES	55.4	M	N	Vertical subtraction, ab - cd
RES	65.2	M	N	Vertical subtraction, a - b

Lesson 130

SUM	101.1	R	O	Oral addition, a0 + b, a = 2 or 3
SUM	83.5	R	N	Oral addition, a + b, emphasis on sums > 10
SUM	102.1	R	N	Horizontal addition, a + b, emphasis on sums > 10
NUM	286.1	R	N	Counting 20, 30, 40, circling groups of 10
NUM	287.1	R	O,MC	More, ac and bc
SUM	100.2	R/M	N	Vertical addition, ab + cd
RES	60.2	R/M	N	Vertical subtraction, ab - cd, emphasis on + and - signs
RES	65.3	M	N	Vertical subtraction, a - b
RES	55.5	M	N	Vertical subtraction, ab - cd

Lesson 131

RES	66.1	R	O,N	Oral subtraction, ab - b, combined with counting by 10's and 1's

SUM	102.2	R	N	Horizontal addition, a + b, emphasis on sums > 10
SUM	83.6	R	N	Oral addition, a + b, emphasis on sums > 10
RES	58.3	R	N	Oral subtraction, a - b
SUM	103.1	R	N	Oral addition, a0 + b, a = 2 or 3
SUM	99.2	R	N	Vertical Addition, a + b + c =< 6
SUM	100.3	R/M	N	Vertical addition, ab + cd
RES	60.3	R/M	N	Vertical subtraction, ab - cd, emphasis on + and - signs
SUM	100.4	M	N	Vertical addition, ab + cd
RES	60.4	M	N	Vertical subtraction, ab - cd, emphasis on + and - signs
RES	65.4	M	N	Vertical subtraction, a - b
SUM	97.2	M	N	Horizontal addition, a + b + c

Lesson 132

SUM	77.7	R	O	Oral addition, a + b, emphasis on sums > 10
SUM	105.1	R	O	Oral addition, a0 + b
RES	66.2	R	O	Oral subtraction, ab - b, combined with counting by 10's and 1's
SUM	106.1	R	N	Vertical addition, ab + c, c = 1 or 2
NUM	288.1	R	N	Counting 20 + b objects, circling groups of 10
SUM	107.1	R/M	N	Horizontal addition, a + b, emphasis on sums > 10
RES	65.5	M	N	Vertical subtraction, a - b
RES	67.1	M	N	Horizontal subtraction, a - b
SUM	97.3	M	N	Horizontal addition, a + b + c

Lesson 133

SUM	77.8	R	O	Oral addition, a + b, emphasis on sums > 10
RES	61.3	R	O	Oral subtraction, a - b
SUM	105.2	R	O	Oral addition, a0 + b
SUM	106.2	R	N	Vertical addition, ab + c, c = 1 or 2
RES	66.3	R	O	Oral subtraction, ab - b, combined with counting by 10's and 1's
SUM	108.1	R	N	Vertical subtraction, ab + c, c = 1 or 2
APL	41.3	R	MC	More and less with money
SUM	107.2	R/M	N	Horizontal addition, a + b, emphasis on sums =< 10
SUM	109.1	M	N	Vertical addition, a + b
RES	65.6	M	N	Vertical subtraction, a - b
RES	67.2	M	N	Horizontal subtraction
SUM	97.4	M	N	Horizontal addition, a + b + c

Lesson 134

NUM	284.3	R	O	Successors and predecessors of N
NUM	282.2	R	O	Successors and predecessors
NUM	283.2	R	O	More and less
SUM	99.3	R	N	Vertical addition, a + b + c =< 6
SUM	83.7	R	N	Oral addition, a + b, emphasis on sums > 10
SUM	110.1	R	N	Vertical addition, ab + c
SUM	101.2	R	N	Oral addition, a0 + b, a = 2 or 3
SUM	111.1	R/M	N	Vertical addition, ab + c
NUM	288.2	M	N	Counting 20 + b objects, groups of 10
SUM	109.2	M	N	Vertical addition, a + b
RES	65.7	M	N	Vertical subtraction, a - b
RES	67.3	M	N	Horizontal subtraction, a - b

Lesson 135

APL	9.1	R	O	Oral addition and subtraction
SUM	77.9	R	O	Oral addition, a + b, emphasis on sums > 10
NUM	289.1	R	N	Successors of a9
NUM	290.1	R	MC	More and less
SUM	112.1	R	N	Oral addition, ao + b
NUM	291.1	R	O	Counting a0 + b
SUM	113.1	R	N	Horizontal addition, a0 + b
SUM	111.2	R/M	N	Vertical addition, ab + c
SUM	111.3	M	N	Vertical addition, ab + c
SUM	116.1	M	N	Vertical addition, a + b + c =< 6
SUM	109.3	M	N	Vertical addition, a + b
RES	65.8	M	N	Vertical subtraction, a - b

Lesson 136

APL	77.1	R	O	Oral addition, subtraction, multiplication
SUM	61.4	R	O	Oral addition, a + b, emphasis on sums > 10
RES	42.1	R	O	Oral subtraction, a - b
NUM	284.4	R	O	Successors and predecessors of N
RES	68.1	R	O	Oral subtraction, ab - b, b = 1 or 2
APL	14.7	R	O	Oral addition and subtraction
SUM	111.4	M	N	Vertical addition, ab + c
NUM	292.1	M	O	Counting, grouping objects by 10's
APL	43.1	M	O	Playing store

Lesson 137

SUM	114.1	R	O	Oral addition, a + b, emphasis on sums > 10
APL	14.8	R	O	Oral addition and subtraction

RES	69.1	R	O	Oral subtraction, 2b - b
APL	42.2	R	O	Oral addition, subtraction, multiplication
NUM	292.2	M	O	Counting by 10's and 1's
SUM	111.5	M	O	Vertical addition, ab + c

Lesson 138

SUM	114.2	R	O	Oral addition, a + b, emphasis on sums > 10
RES	70.1	R	N	Vertical subtraction, ab - c, c = 1 or 2
NUM	291.2	R	O	Counting a0 + b
SUM	113.2	R	N	Horizontal addition, a0 + b
SUM	115.1	R	N	Vertical addition, ab + c, emphasis on zero
SUM	112.2	R	N	Oral addition, a0 + b
NUM	293.1	R/M	N	Counting a0 + b objects
SUM	109.4	M	N	Vertical addition, a + b
RES	65.9	M	N	Vertical subtraction, a - b
SUM	116.2	M	N	Vertical addition, a + b + c =< 6
SUM	97.5	M	N	Horizontal addition, a + b + c

Lesson 139

SUM	114.3	R	O	Oral addition, emphasis on sums > 10
SUM	105.3	R	O	Oral addition, a0 + b
RES	70.2	R	N	Vertical subtraction, ab - c, c = 1 or 2
NUM	289.2	R	O,N	Successors of ab
NUM	290.2	R	MC	More and less
RES	71.1	R	N	Vertical subtraction, ab - c, c = 1 or 2
NUM	287.2	R	O,MC	More and less, ac and bc
NUM	291.3	R/M	O	Counting a0 + b
SUM	117.1	R/M	N	Addition, a0 + b
SUM	118.1	M	N	Horizontal addition, a + b, emphasis on sums > 10
RES	72.1	M	N	Horizontal subtraction
NUM	293.2	M	N	Counting a0 + b objects

Lesson 140

SUM	114.4	R	O	Oral addition, a + b, emphasis on sums > 10
APL	44.1	R	O	Oral subtraction and division
SUM	105.4	R	O	Oral addition, a0 + b
RES	73.1	R	N	Vertical subtraction, ab - c
SUM	119.1	R	N	Vertical addition, ab + c, a + b
NUM	289.3	R	O,N	Successors of ab
NUM	290.3	R	MC	More and less
SUM	120.1	R/M	N	Vertical addition, a + b + c =< 9
SUM	118.2	M	N	Horizontal addition, a + b, emphasis on sums > 10
RES	72.2	M	N	Horizontal subtraction, a - b

NUM	293.3	M	N	Counting a0 + b objects, circling 10's
NUM	291.3	M	O	Counting a0 + b
SUM	117.2	M	N	Addition, a0 + b

Lesson 141

SUM	114.5	R	O	Oral addition, a + b, emphasis on sums > 10
SUM	105.5	R	O	Oral addition, a0 + b
RES	73.2	R	N	Vertical subtraction, ab - c
SUM	121.1	R	N	Vertical addition, a + b + c =< 6, emphasis on zero
NUM	287.3	R	O,MC	More and less, ac and bc
NUM	289.4	R	O,N	Successors and predecessors
NUM	290.4	R	MC	More and less
RES	74.1	R/M	N	Vertical subtraction, ab - c
SUM	118.3	M	N	Horizontal addition, a + b, emphasis on sums >= 10
RES	72.3	M	N	Horizontal subtraction
SUM	113.3	M	N	Horizontal addition, a0 + b

Lesson 142

APL	14.9	R	O	Oral addition and subtraction
NUM	295.1	R	N	Copying fractions, 1/2, 1/3, 1/4, 2/3, 2/4, 3/4
NUM	296.1	R	N	Successor and predecessor of N
NUM	297.1	R	MC	More and less
APL	45.1	R	O	Oral subtraction and multiplication
NUM	289.5	R	N	Successors of ab
NUM	290.5	R	MC	More and less
NUM	298.1	R/M	N	Counting up to 99 objects
RES	74.2	M	N	Vertical subtraction, ab - c
SUM	120.2	M	N	Vertical addition, a + b + c =< 9
SUM	119.2	M	N	Vertical addition, ab + c, a + b

Lesson 143

APL	42.3	R	O	Oral addition, multiplication, subtraction
NUM	296.2	R	N	Successor and predecessor of N
NUM	297.2	R	MC	More and less
NUM	280.1	R	N	Writing fractions from dictation
APL	46.1	R	O	Oral subtraction and addition
NUM	197.3	R	MC	More and less
NUM	299.1	R/M	MC	Selecting the fraction that represents the shaded part of the figure
RES	74.3	M	N	Vertical subtraction, ab - c
SUM	118.4	M	N	Horizontal addition, a + b, emphasis on sums >= 10
RES	67.4	M	N	Horizontal subtraction, a - b
SUM	119.3	M	N	Vertical addition, ab + c, a + b

APPENDIX F

Lesson 144

APL	42.4	R	O	Oral adition, subtraction, multiplication
NUM	297.4	R	MC	More and less
NUM	280.2	R	MC	Selecting the figure divided in 1/2, 1/3, 1/4
NUM	300.1	R	MC	Ordinals of 1st to 6th
APL	14.1	R	O	Oral addition and subtraction
NUM	301.1	R/M	N	Coloring in various parts of a figure
RES	74.4	M	N	Vertical subtraction, ab - c
NUM	298.2	M	N	Counting 10-99
SUM	119.4	M	N	Vertical addition, ab + c, a + b

Lesson 145

APL	47.1	R	O	Oral problems with fractions, comparing size
RES	75.1	R	N	Vertical subtraction, ab - c, emphasis on b = c or c = 0
NUM	297.5	R	MC	More and less
APL	45.2	R	O	Oral subtraction and multiplication
SUM	23.2	R-AorB	O	Oral addition
RES	74.5	R/M	N	Vertical subtraction, ab - c
SUM	122.1	R/M	N	Vertical addition, ab + c, emphasis on + and - signs
SUM	111.6	M	N	Vertical addition, ab + c
RES	74.6	M	N	Vertical subtraction, ab - c
SUM	118.5	M	N	Horizontal addition, a + b, emphasis on sums >= 10
RES	67.5	M	N	Horizontal subtraction, a - b
SUM	120.3	M	N	Vertical addition, a + b + c =< 9

Lesson 146

APL	48.1	R	O	Oral multiplication and division
NUM	300.2	R	O,MC	Ordinals, 1st to 6th
APL	49.1	R	D	Clock, drawing the hour hand
NUM	302.1	R	MC	More and less
RES	43.3	R-AorB	O	Oral subtraction
NUM	269.2	R/M-B	N	Counting pictures to 20
RES	55.5	R/M-A	N	Vertical subtraction, ab - cd
NUM	298.3	M	N	Counting pictures to 99
MED	4.3	M	P,O	Measuring objects, cm
SUM	111.7	M	N	Vertical addition, ab + c
RES	74.7	M-AorB	N	Vertical subtraction, ab - c

Lesson 147

APL	47.2	R	O	Oral fractions, comparing size
NUM	300.3	R	O,MC	Ordinals, 1st to 6th
APL	49.2	R	D	Clock, drawing the hour hand

APL	48.2	R	O	Oral multiplication and division
NUM	302.2	R-A	MC	More and less
NUM	213.2	R-B	MC	Reading numerals
RES	76.1	R/M-A	N	Vertical subtraction, ab - cd, ab - c
RES	76.2	R/M-B	N	Vertical subtraction, ab - cd, ab - c
SUM	118.6	M-B	N	Horizontal addition, a + b, emphasis on sums >= 10
RES	67.6	M-B	N	Horizontal subtraction, a - b
SUM	118.7	M-A	N	Horizontal addition, a + b, emphasis on sums >= 10
RES	67.7	M-A	N	Horizontal subtraction, a - b
SUM	120.4	M	N	Vertical addition, a + b + c =< 9

Lesson 148

RES	45.2	R	N	Oral subtraction, a - b =< 9
NUM	302.3	R	MC	More and less
NUM	300.4	R	MC	Ordinals, 1st to 6th
APL	51.1	R	O	Oral subtraction, multiplication, division
NUM	303.1	R-B	N	Counting pictures and writing the numeral
RES	39.4	R-A	O	Oral subtraction, ab - b
RES	76.3	R/M-A	N	Vertical subtraction, ab - cd, ab - c
RES	76.4	R/M-B	N	Vertical subtraction, ab - cd, ab - c
NUM	298.4	M	N	Counting pictures to 99
NUM	295.2	M	N	Copying fractions, 1/2, 1/3, 1/4, 2/3, 2/4, 3/4
SUM	118.8	M-A	N	Horizontal addition, a + b, emphasis on sums >= 10
RES	67.8	M-A	N	Horizontal subtraction, a - b
SUM	118.9	M-B	N	Horizontal addition, a + b, emphasis on sums >= 10
RES	67.9	M-B	N	Horizontal subtraction, a - b

Lesson 149

APL	52.1	R	O	Oral multiplication
NUM	302.4	R	MC	More and less
RES	58.4	R	N	Oral subtraction, a - b
APL	53.1	R-AorB	O	Clock, reading the hour
NUM	268.1	R-A&B	E	Counting to 30
APL	19.5	R/M-B	N	Value of bills together
APL	39.4	R/M-A	N	Value of money together
MED	4.4		M	Measuring pictures, cm
APL	34.2	M-A	O	Playing store with money
APL	13.3	M-B	O	Playing store with bills

Lesson 150

NUM	304.1	R	O	Ordinals, 1st to 6th
APL	54.1	R		Oral problems

APPENDIX F

NUM	302.5	R	MC	More and less
APL	19.6	R	N	Value of bills together
NUM	216.2	R	N	B: Writing numerals from dictation
RES	77.1	R	N	A: Oral subtraction
NUM	305.1	R/M	N	Fractions
MED	4.5	M	N	Length, measuring with a ruler, 1-10 cm
APL	50.1	M-A&B	P	Playing bingo with addition and subtraction

THE RADIO MATHEMATICS PROJECT

REFERENCES

Anscombe, F. J. The transformation of Poisson, binomial and negative-binomial data. Biometrika, 1948, 35, 246-254.

Atkinson, R. C. Computer-based instruction in initial reading. Proceedings of the 1967 Invitational Conference on Testing Problems. Princeton, N.J.: Educational Testing Service, 1968.

Bower, G. An association model for response and training variables in paired-associate learning. Psychological Review, 1962, 69, 34-53.

Budoft, M., & Quinlan, D. Auditory and visual learning in primary grade children. Child Development, 1964, 35, 583-586.

Bunda, M. A. An investigation of an extension of item sampling which yields individual item scores. Journal of Educational Research, 1973, 10, 117-130.

Chu, G., & Schramm, W. Learning from television: What the research says. Washington, D.C.: National Association of Educational Broadcasters, 1967.

Cook, D. L., & Stufflebeam, D. L. Estimating test norms from variable size items and examinee samples. Journal of Educational Research, 1967, 4, 27-33.

de Morgan, A. The elements of arithmetic. London: Walton & Draberly, 1830.

Fletcher, J. D., & Atkinson, R. C. An evaluation of the Stanford CAI program in initial reading (Grades K through 3). Journal of Educational Psychology, 1972, 63, 597-602.

Hawley, N. S., & Suppes, P. Geometry in the first grade. American Mathematical Monthly, 1959, 66(6), 505-506.

Jamison, D., Suppes, P., & Wells, S. The effectiveness of alternative instructional media: A survey. Review of Educational Research, 1974, 44, 1-67.

Kleinke, D. J. A linear-prediction approach to developing test norms based on matrix-sampling. Educational and Psychological Measurement, 1972, 32, 75-84.

Lesser, G. S. Children and television: Lessons from Sesame Street. New York: Random House, 1974.

Lord, F. M. Estimating norms by item sampling. Educational and Psychological Measurement, 1962, 22, 259-267.

McAnany, E. G. Radio's role in development: Five strategies of use. Washington, D.C.: Academy for Educational Development, 1973.

McGeoch, J. A., & Irion, A. L. The psychology of human learning (2nd ed.). New York: Longmans, Green, 1952.

National Aeronautical and Space Administration (NASA). SACI project: Project review meeting. Washington, D.C.: NASA, 1972.

Owens, J. R., & Stufflebeam, D. L. An experimental comparison of item sampling and examinee sampling for estimating test norms. Educational and Psychological Measurement, 1969, 24, 623-630.

Perelle, I. Auditory and written visual stimuli as factors in learning and retention. Reading Improvement, 1975, 12, 15-22.

Phillips, C. Radio broadcasting in Sudan. NAEB Journal, July-August 1964.

Plumlee, L. B. Estimating means and standard deviations from partial data--An empirical check on Lord's item sampling technique. Educational and Psychological Measurement, 1964, 24, 623-630.

Schmelkes de Sotelo, S. The radio schools of the Tarahumara, Mexico: An evaluation. Stanford, Calif.: Stanford University, Institute for Communication Research, 1973.

Schoen, H. Self-paced mathematics instruction: How effective has it been? Arithmetic Teacher, 1976, 23, 90-96.

Schramm, W. Educational radio in Thailand. New Media, 1967, 1, 85-103.

Searle, B. Site selection process: Radio Mathematics Project. Stanford, Calif.: Stanford University, Institute for Mathematical Studies in the Social Sciences, 1974.

Stanford, M. C. A review of recent research in instructional television and radio. Introduction in G. C. Chu & W. Schramm, Learning from television: What the research says (Rev. Ed.).

Washington, D.C.: National Association of Educational Broadcasters; and Stanford, Calif.: Stanford University, Institute for Communication Research, 1975. (ERIC Document Reproduction Service No. ED 109 985)

Stolurow, L. M. Teaching by machine. Washington, D.C.: U.S. Department of Health, Education, and Welfare, 1961.

Suppes, P. On the behavioral foundations of mathematical concepts. Monographs of the Society for Research in Child Development, 1965, 30, 60-96.

Suppes, P. Computer-assisted instruction at Stanford. In Man and computer. Basel: Karger, 1972.

Suppes, P. A survey of cognition in handicapped children. Review of Educational Research, 1974, 44, 145-176.

Suppes, P., & Ginsberg, R. Application of a stimulus sampling model to children's concept formation with and without overt correction responses. Journal of Experimental Psychology, 1962, 63, 330-336.

Suppes, P., & Groen, G. Some counting models for first-grade performance data on simple addition facts. In J. M. Scandura (Ed.), Research in mathematics education. Washington, D.C.: National Council of Teachers of Mathematics, 1967.

Suppes, P., & Hansen, D. Accelerated program in elementary-school mathematics--The first year. Psychology in the Schools, 1965, 2, 195-203.

Suppes, P., & Hill, S. The concept of set. Grade Teacher, April 1962, pp. 51; 86-90.

Suppes, P., & Ihrke, C. Accelerated program in elementary-school mathematics--The third year. Psychology in the Schools, 1967, 4, 293-309. Reprinted in R. B. Ashlock & W. L. Herman, Jr. (Eds.), Current research in elementary school mathematics. New York: Macmillan, 1970.

Suppes, P., Jerman, M., & Brian, D. Computer-assisted instruction: Stanford's 1965-66 arithmetic program. New York: Academic Press, 1968.

Suppes, P., & Morningstar, M. Technological innovations: Computer-assisted instruction and compensatory education. In F. Korten, S. Cook, & J. Lacey (Eds.),

Psychology and the problems of society. Washington, D.C.: American Psychological Association, 1970.

Suppes, P., & Morningstar, M. Computer-assisted instruction at Stanford, 1966-68: Data, models, and evaluation of the arithmetic programs. New York: Academic Press, 1972.

Suppes, P., Searle, B., & Lorton, P. The Stanford CAI arithmetic strands program. In preparation.

Underwood, B. J. Ten years of massed practice on distributed practice. Psychological Review, 1961, 86, 229-247.

Wilson, G. M. Arithmetic. Research in constructing the elementary school curriculum (Third yearbook of the Department of Superintendence). Washington, D.C.: NEA, 1925.

INDEX

Achievement, mathematics, 55-60
Active responding, 16, 89, 106-107, 127-129
Addition, 32, 44, 52, 58, 71, 86
Advanced objectives, 71
Advisory committee, 125-126
Age of students, 65-66, 115-118
Algorithm, 87
Allocation model, 81
Applications, 32, 46, 60, 71, 78
Attentiveness, 19, 36 89-90
Aural learning, 88

Basic concepts, 32, 71, 78
Borrowing in subtraction, 44

Carrying in addition, 44
Classroom observations, 123-124
Concrete materials, 82, 92-93
Cooperative answering, 38, 52, 55
Copying, 38, 52, 55, 139
Curriculum
  objectives, 71
  structure of, 69
Curriculum guide, Nicaraguan, 44, 69-70

Data,
  observation, 16-19, 130-132
  performance, 19-27, 38-40, 48-52, 55-66, 132-135, 139-145
Deferred response, 101
Diagnostic segments, 129-130
Digit reversal, 64, 135
Distributed practice, 93
Division, 44
Double-identifier system, 108

Embedded test, 75-78
Entertainment, 78, 102, 130
Equivalence class, 44, 71
Error analysis, 60-64, 133-135
Exercise
  class, 71-72, 73-75
  types of, 10
Experimental
  schools, 120
  teachers, 120

First-grade curriculum, 75-78
Fractions, 49
Free-response format, 100

Geometry, 32, 44-46, 58
Government of Nicaragua, 1
Granada, 124
Granada experiment, 124

Identifier, 37, 108
IMSSS, 5-6
Individual differences, 94-97, 136
Institute for Mathematical Studies in the Social Sciences, 5-6
Instructional
  methodology, 85
  radio, 1
Instructions, 36-108
Item
  domain, 43
  types, 47

Kleinke method, 64

Learning by example, 85-86
Lesson
  format, 81
  outline, 78, 103
  segment, 72-100
  structure, 9, 16, 27 31-32

Masaya, 115
Mathematics achievement, 55-60
Matrix sampling, 43, 47
Measurement, 71
Mental computation, 87
Minimal objectives, 71
Ministry of Education, 44
Mixed drill, 93-94
Multiple-choice format, 100
Multiplication, 44, 58
Municipal schools, 52, 115

Nicaraguan curriculum guide, 44, 69-70
Numeration, 32, 44, 71, 73, 78

Observation
  data, 16-19, 130-132
  form, 123
Oral
  arithmetic, 32, 63, 145-150
  exercises, 106
  group responses, 88-89
  responses, 18-19, 33, 101, 107

Pacing, 89, 93, 95
Partial ordering, 75
Performance data, 19-27, 38-40, 48-52, 55-66, 132-135, 139-145
Physical responses, 102
Postbroadcast activities, 38, 131-132
Practice, 93-94
Prerequisite relationships, 72, 75, 78

Reinforcement, 26, 31, 7, 90-92, 132-133
Remediation, 135
Repetition, 36, 131
Response
  time, 14, 17-18, 37, 103
  type, 32
  oral, 18-19, 88-89
  written, 19

INDEX

Revision, 80
Rhetorical questions, 36
Rhythm, 106
Rural schools, 52, 64-66, 115

Schools, urban and rural, 52
Segment, 10, 31-32, 99
  length of, 111
Sesame Street, 2-3
Songs, 102
Stories, 10, 29, 31, 36, 89
Strand, 31-32, 44, 70-71
Student evaluation, 125
Subtraction, 44, 58, 71
Supervision, 122

Teacher
  interviews, 150-152
  training, 121-122
Teacher's guide, 38, 132
Teacher's role, 16, 31, 36, 38, 118-120, 121-122, 129-130
Test
  administration of, 54-55, 138-139
  domain, 43, 44
  items, 47
Test of Basic Experiences, 138-139
Time for responding, 103
Time, response, 14, 17-18
TOBE, 138-139
Transition segment, 99
Transitions, 102

Urban schools, 52, 64-66, 115

Word problems, 46, 60, 100
Worksheet, 14, 16, 17, 33, 36, 108, 121, 129, 135
Written responses, 19, 101-102

Zero, 64