AGENCY FOR INTERNATIONAL DEVELOPMENT
WASHINGTON, D. C. 20523

BIBLIOGRAPHIC INPUT SHEET

FOR AID USE ONLY
Batch 70

1. SUBJECT CLASSIFICATION
A. PRIMARY: Science and technology — TC00-0000-0000
B. SECONDARY: Applications

2. TITLE AND SUBTITLE
Village technology handbook: home improvement and communication

3. AUTHOR(S)
(101) Volunteers for Int.Technical Assistance,Inc.,Mt.Rainier,Md.

4. DOCUMENT DATE	5. NUMBER OF PAGES	6. ARC NUMBER
1964	53p.	ARC 621.9.A265 1964

7. REFERENCE ORGANIZATION NAME AND ADDRESS
AID/TA/OST

8. SUPPLEMENTARY NOTES (*Sponsoring Organization, Publishers, Availability*)
(In English and French. French,62p.: PN-AAE-926)

9. ABSTRACT

10. CONTROL NUMBER
PN-AAE-925

11. PRICE OF DOCUMENT

12. DESCRIPTORS
Improvements
Interior decorating
Projection
Reproduction
Visual aids
Intermediate technology

13. PROJECT NUMBER

14. CONTRACT NUMBER
AID/TA/OST

15. TYPE OF DOCUMENT

AID 590-1 (4-74)

VILLAGE TECHNOLOGY HANDBOOK

PN-AAE-925
AID/TA/OST

CI-12

HOME IMPROVEMENT

COMMUNICATIONS

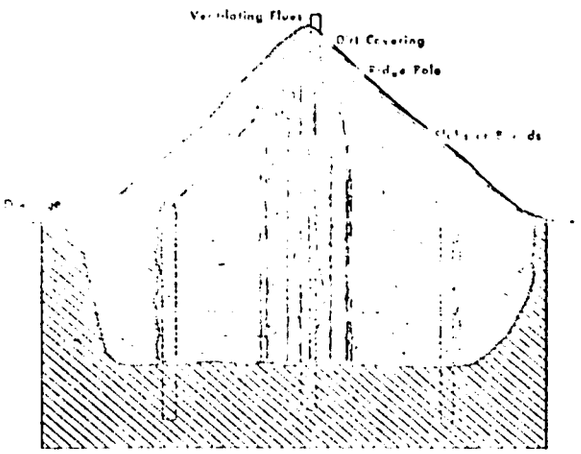

Outdoor Storage Cellar

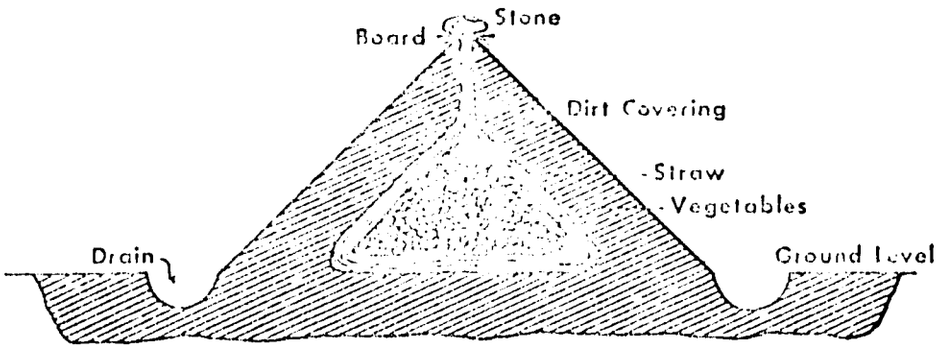

Outdoor Storage Pits

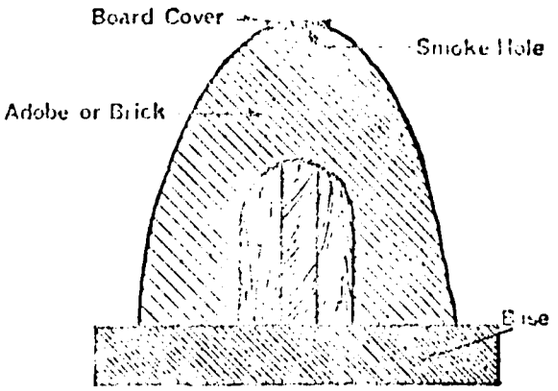

Outdoor Oven

DEPARTMENT OF STATE · AGENCY FOR INTERNATIONAL DEVELOPMENT
COMMUNICATIONS RESOURCES DIVISION
WASHINGTON, D. C. 20523

1964

TABLE OF CONTENTS

PAGE

INTRODUCTION

3 Foreword
4 How To Use This Handbook

WATER SUPPLY

5 Spring Development
8 Cisterns
11 Cistern Catchment
14 Cistern Filter
16 Sand Filter
19 Water Purification Plant
22 Reconstruction Of Dug Wells
26 Deep Dug Well
30 Driven Well
34 A Sanitary Rope And Bucket Well
36 Determination Of Water Flow With Known Pipe Size And Reservoir Height And Location
38 Estimating Small Stream Water Flow
41 Selecting A Dam Site
44 Water Lift
46 Chain Pump For Irrigation
50 Estimating Paddle Wheel Power
53 Reciprocating Wire Power Transmission
56 Map Making Using A Plane Table

HEALTH AND SANITATION

59 Introduction To Sanitary Latrines
61 Privy Location
63 Privy Shelters
65 Pit Privy
69 Water Privy
73 Philippine Water Seal Latrine

AGRICULTURE

81 Tile For Garden Irrigation And Drainage
84 Concrete Tile Machine
94 Making Concrete Tile
96 Siphon Tube
98 Spring Winder
100 Fresno Scraper
106 Buck Scraper
109 Float With Adjustable Blade
112 V-Drag

FOOD PROCESSING AND PRESERVATION

115 Multiple Hitches
118 Dessiccant Drying For Grain, Etc
121 Winter Storage of Vegetables

PAGE

123 Outdoor Storage Pits
126 Outdoor Storage Cellar
127 Corn Silage

HOUSING AND CONSTRUCTION

131 Splitting Bamboo
133 Bamboo Joints
136 Bamboo Preservation
138 Bamboo Board
141 Bamboo Walls, Partitions and Ceilings
143 Pole Frame Construction For Farm And Utility Buildings
150 Prefabricated Panels In Pole Building
157 Casein Glue
160 Preparation Of Fish Glu

HOME IMPROVEMENT

163 Cooking Stove
167 Outdoor Oven
169 Home Soap Making
174 A Nest Of Low-Cost Beds
176 A Locally-Made Mattress
178 Potter's Wheel Sewing Machine Drive
184 Small Rectangular Kiln
193 Salt Glaze For Pottery

COMMUNICATIONS

195 Inexpensive Rubber Cement
197 Flashlight Slide Projector
199 Filmstrip Adaptor For The Flashlight Slide Projector
202 Gelatin Duplicator
204 Paper Stencil Method
206 Silk Screen Paint

TABLES

209 Temperature Conversion
210 Length Conversion
212 Weight Conversion

FOREWORD

It is in a world of villages that most of the people live. Surrounding these villages are the farmlands that feed the nations and support their economic development. Thus, any improvement in the villages is of benefit to all.

This second edition of the Village-Technology Handbook aims at helping to generate village-improvement in many nations through listing additional ideas, methods and materials that have proven useful in villages throughout the world.

Widespread usage of the first Village Technology Handbook, issued in August, 1963, and comments from field technicians and others who have used it, have shown the need for this interchange of ideas. In essence, these handbooks are a clearing house through which technicians can tell each other of low-cost, locally-developed means of village improvement that they have experienced or observed.

Those who read and use these handbooks should see that this knowledge reaches down into the village and results in village action. At the same time, they should inform this office of those useful ideas and methods that they believe will have value in other nations.

Additional copies of this handbook can be obtained from the United States Agency for International Development in foreign countries or from the Communications Resources Division, Agency for International Development, Washington, D. C. 20523, U. S. A.

ooo

The Agency for International Development is indebted to Volunteers for International Technical Assistance, Inc. for a major part of the content of this publication. Compilation, testing and development of the material was completed by VITA under contract with the Office of Technical Services, Department of Commerce.

HOW TO USE THIS HANDBOOK

The major purpose of this handbook is to describe low-cost activities that can be locally developed by villagers. However, there are activities that...

- can be developed only with guidance of trained technicians or other trained individuals
- need equipment that must be used on a multi-village basis, because of cost factors
- require materials that can be best produced at a central facility and distributed to the villages

It is recommended that these activities be considered for program activity by government extension agencies, co-operatives, and other organizations capable of developing activities on a multi-village basis.

In some cases, village leaders and personnel of cooperatives can be trained in the techniques and provided with the necessary equipment. Operations teams can also be organized and trained to demonstrate techniques or guide the villagers in development of the project.

Other articles can be studied for local adaptation, translation and distribution directly to the villages, extension agents, cooperatives, etc.

It is also recommended that you obtain a copy of the first Village Technology Handbook, if you do not already have one. This contains basic information on the use of concrete and many village-improvement activities.

The conversion tables shown at the end of this handbook are for your convenience. They will help you to quickly convert any size or quantity to the system used in your country.

Conversions have been made for you in some of the following articles. These conversions are only guides and must be adapted to locally available materials. When this is done, be sure to make necessary changes in related sizes. (Ex: Holes must be changed according size of local bolts.)

TEMPERATURE CONVERSION

ABSTRACT

This chart is useful for quick conversion from Centigrade to Fahrenheit and vice versa. The equations provide slower but more accurate results.

TOOLS AND MATERIALS (None)

DETAILS

Although the chart is fast and handy, you must use the equations below to calculate the exact conversion if your answer must be accurate to within one degree:

Degrees Centigrade = 5/9 x (Degrees Fahrenheit -32)

Degrees Fahrenheit = 1.8 x (Degrees Centigrade +32)

This example may help to clarify the use of the equations; 72 F equals how many degrees Centigrade?

$$72^{o}F = 5/9\ (^{o}F - 32)$$

$$72^{o}F = 5/9\ (72 - 32)$$

$$72^{o}F = 5/9\ (40)$$

$$72^{o}F = 22.2\ ^{o}C$$

Notice that the chart reads 22 ^{o}C, an error of about 0.2 ^{o}C.

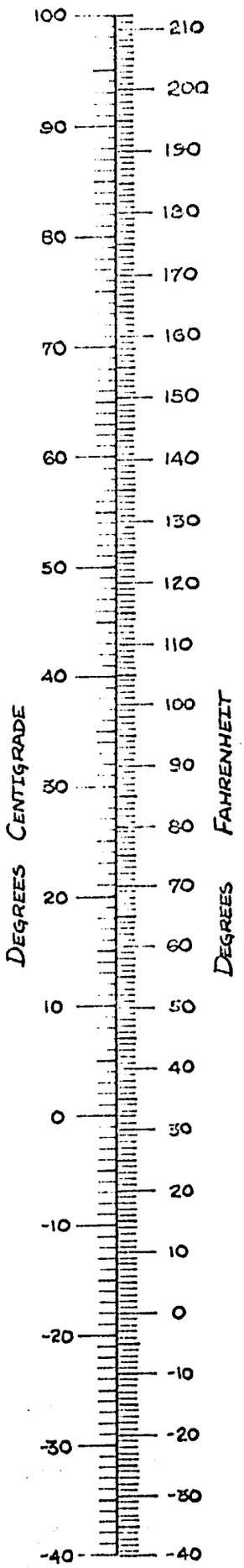

LENGTH CONVERSION

ABSTRACT

This foldout chart is useful for quick conversion from meters and centimeters to feet and inches or vice-versa. For distances greater than three meters, or more accurate results, the tables or conversions equations must be used.

TOOLS AND MATERIALS (None)

DETAILS

The chart (page 4) has metric divisionf of one centimeter to three meters, and English graduations in inches and feet to ten feet. It is accurate to about plus or minus one centimeter. Folding out the chart makes a handy reference when studying other drawings in the Handbook.

For more accurate results these tables are useful:

INCHES INTO CENTIMETERS
(1 in. = 2.539977 cm.)

inches	0	1	2	3	4	5	6	7	8	9
0	cm.	2.54	5.08	7.62	10.16	12.70	15.24	17.78	20.32	22.86
10	25.40	27.94	30.48	33.02	35.56	38.10	40.64	43.18	45.72	48.26
20	50.80	53.34	55.88	58.42	60.96	63.50	66.04	68.58	71.12	73.66
30	76.20	78.74	81.28	83.82	86.36	88.90	91.44	93.98	96.52	99.06
40	101.60	104.14	106.68	109.22	111.76	114.30	116.84	119.38	121.92	124.46
50	127.00	129.54	132.08	134.62	137.16	139.70	142.24	144.78	147.32	149.86
60	152.40	154.94	157.48	160.02	162.56	165.10	167.64	170.18	172.72	175.26
70	177.80	180.34	182.88	185.42	187.96	190.50	193.04	195.58	198.12	200.66
80	203.20	205.74	208.28	210.82	213.36	215.90	218.44	220.98	223.52	226.06
90	228.60	231.14	233.68	236.22	238.76	241.30	243.84	246.38	248.92	251.46

CENTIMETERS INTO INCHES
(1 cm. = 0.3937 in.)

cm.	0	1	2	3	4	5	6	7	8	9
0	inches	0.394	0.787	1.181	1.575	1.969	2.362	2.756	3.150	3.543
10	3.937	4.331	4.724	5.118	5.512	5.906	6.299	6.693	7.087	7.480
20	7.874	8.268	8.661	9.055	9.449	9.843	10.236	10.630	11.024	11.417
30	11.811	12.205	12.598	12.992	13.386	13.780	14.173	14.567	14.961	15.354
40	15.748	16.142	16.535	16.929	17.323	17.717	18.110	18.504	18.898	19.291
50	19.685	20.079	20.472	20.866	21.260	21.654	22.047	22.441	22.835	23.228
60	23.622	24.016	24.409	24.803	25.197	25.591	25.984	26.378	26.772	27.165
70	27.559	27.953	28.346	28.740	29.134	29.528	29.921	30.315	30.709	31.102
80	31.496	31.890	32.283	32.677	33.071	33.465	33.858	34.252	34.646	35.039
90	35.433	35.827	36.220	36.614	37.008	37.402	37.795	38.189	38.583	38.976

An example may help explain how to use this type of table. Suppose you wish to find how many inches are equal to 66 cm. On the cm. to in. table look down the leftmost column to 60 cm., and then right to the column headed 6 cm. This gives the result, 25.984 inches.

EQUATIONS

1 inch = 2.54 cm.
1 foot = 30.48 cm.
= 0.3048m.
1 yard = 91.44 cm.
= 0.9144m.
1 mile = 1.6. km.

1 cm. = 0.3937 in.
1 m. = 39.37 in.
= 3.28 ft.
1 km. = 0.62137 mile

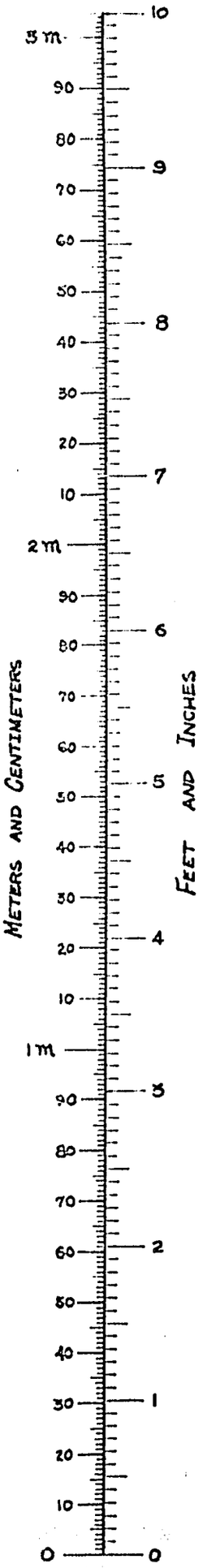

WEIGHT CONVERSION

ABSTRACT

The chart converts pounds and ounces to kilograms and grams of vice versa. For weights greater than ten pounds, or more accurate results, the tables or conversion equations must be used.

TOOLS AND MATERIALS (None)

DETAILS

Notice that there are sixteen divisions for each pound on the chart to represent ounces. There are only 100 divisions in the first kilogram, and each division represents ten grams. The chart is accurate to about plus or minus twenty grams.

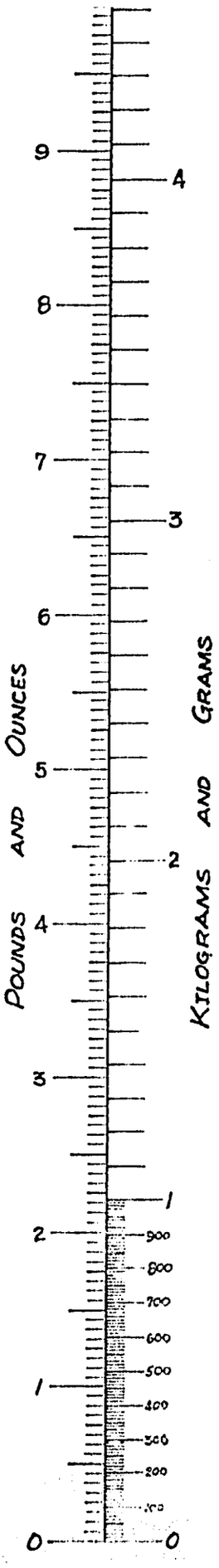

KILOGRAMS INTO POUNDS
(1 kg. = 2.20463 lb.)

kg.	0	1	2	3	4	5	6	7	8	9
0	lb.	2.20	4.41	6.61	8.82	11.02	13.23	15.43	17.64	19.84
10	22.05	24.25	26.46	28.66	30.86	33.07	35.27	37.48	39.68	41.89
20	44.09	46.30	48.50	50.71	52.91	55.12	57.32	59.53	61.73	63.93
30	66.14	68.34	70.55	72.75	74.96	77.16	79.37	81.57	83.78	85.98
40	88.19	90.39	92.59	94.80	97.00	99.21	101.41	103.62	105.82	108.03
50	110.23	112.44	114.64	116.85	119.05	121.25	123.46	125.66	127.87	130.07
60	132.28	134.48	136.69	138.89	141.10	143.30	145.51	147.71	149.91	152.12
70	154.32	156.53	158.73	160.94	163.14	165.35	167.55	169.76	171.96	174.17
80	176.37	178.58	180.78	182.98	185.19	187.39	189.60	191.80	194.01	196.21
90	198.42	200.62	202.83	205.03	207.24	209.44	211.64	213.85	216.05	218.26

POUNDS INTO KILOGRAMS
(1 lb. = 0.45359 kg.)

lb.	0	1	2	3	4	5	6	7	8	9
0	kg.	0.454	0.907	1.361	1.814	2.268	2.722	3.175	3.629	4.082
10	4.536	4.990	5.443	5.897	6.350	6.804	7.257	7.711	8.165	8.618
20	9.072	9.525	9.979	10.433	10.886	11.340	11.793	12.247	12.701	13.154
30	13.608	14.061	14.515	14.969	15.422	15.876	16.329	16.783	17.237	17.690
40	18.144	18.597	19.051	19.504	19.958	20.412	20.865	21.319	21.772	22.226
50	22.680	23.133	23.587	24.040	24.494	24.948	25.401	25.855	26.308	26.762
60	27.216	27.669	28.123	28.576	29.030	29.484	29.937	30.391	30.844	31.298
70	31.751	32.205	32.659	33.112	33.566	34.019	34.473	34.927	35.380	35.834
80	36.287	36.741	37.195	37.648	38.102	38.555	39.009	39.463	39.916	40.370
90	40.823	41.277	41.730	42.184	42.638	43.091	43.545	43.998	44.452	44.906

EQUATIONS

1 oz. = 28.35 g. 1 g. = 0.03527 oz.
1 lb. = 0.4536 kg. 1 kg. = 2.205 lb.

HOME IMPROVEMENT

BRAZIL

COOKING STOVE

Abstract

This cooking stove may be built completely from local materials. The stove will burn wood, charcoal or cowdung without smoking. It may be necessary to build several stoves before finding the best method.

Tools and Materials

Clay and straw cuttings
Chimney tile, 4 inches (10 cm) diameter
Trowel, string, knife, ruler
Iron rings*
Small grate*, 7x7 inches (18x18 cm) or series of 7 inch iron rods
Sheet metal*, 8 x 14 inches (18 x 35 cm)

* These items will improve the stove but are not necessarily needed.

Details

A compact block of clay 30 by 30 by 10 inches (75 x75 cm x 25 cm high) should be formed where you want the stove in the kitchen. (You can build the stove outside the house and move it to the kitchen after it dries). An ash pit must be dug out of the floor as shown in the drawings.

When making the clay, mix five to ten baskets of clay with each basket of straw cuttings. This material should be mixed with water so that it is easy to work. Some authorities add 10 percent of fresh cowdung and leave the mixture in the shade for a week, keeping it wet.

Use a ruler and compass (made with two sharpened sticks joined by string) to design the stove on the clay block and cut out as shown in the drawings. The size of the three pot holes and the distance between each depends on the size of the pots to be used, especially if iron rings cannot be used to make the holes smaller. With a knife, carefully hollow out the clay slab as shown in the drawings. Do not undercut the bridge between the top holes. However the roof of the bridge passages should not be thicker than one inch (2.5 cm) as the hot stream of air will not reach the pots.

After the ash pit has been dug, put the small grate down through hole 1. This may be difficult for some type grates and may need cutting a narrow slot in the side of hole 1 (away from hole 3) to hold the grate.

Cut a slit in the side of the stove and work the sheet metal damper in, forming a groove in the process. Again...be careful not to undercut the top side of the stove.

Take a round-bottom pot, press it in each hole and turn it so that the pot sits firmly in the hole. This will stop smoke from coming up around the pots when cooking. Place covers (vessels of flat stones, etc.) over the three pot openings. Start a fire in the stove and bake it until the stove is dry. Use wet clay to cover any cracks that show while the stove is drying.

Now build the chimney tiles over the chimney hole and up through the roof. Plaster all joints carefully with clay. If the climate is windy or wet, a covering must be used over the top of the chimney.

When using the stove...

- always cover the openings with vessels or flat stones, etc.
- move the damper until the fuel burns best
- use iron rings, if possible, so the pot holes will hold smaller vessels
- cover cracks with wet clay, whenever they show
- remove soot periodically

Evaluation

This type of stove has apparently been used successfully in India.

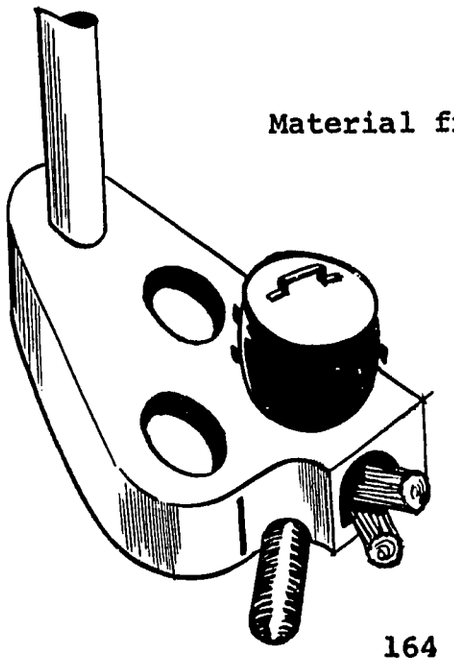

Material from...MAGAN CHOOLA by Gandhi-niketan A shram and THE SMOKELESS 'HERL CHULA' from the Hyderabad Engineering Research Laboratories, India

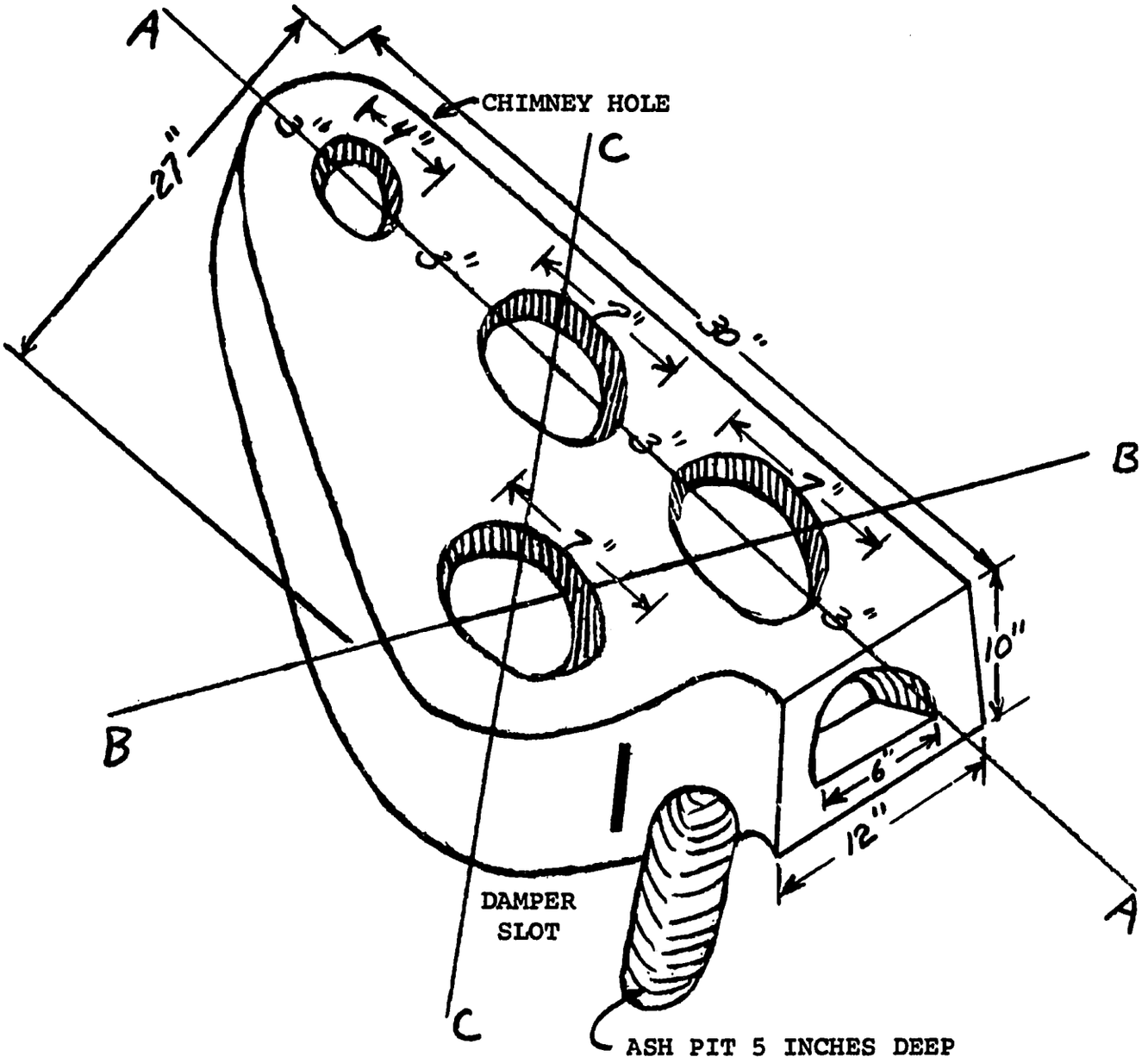

VIEW ALONG LINE A

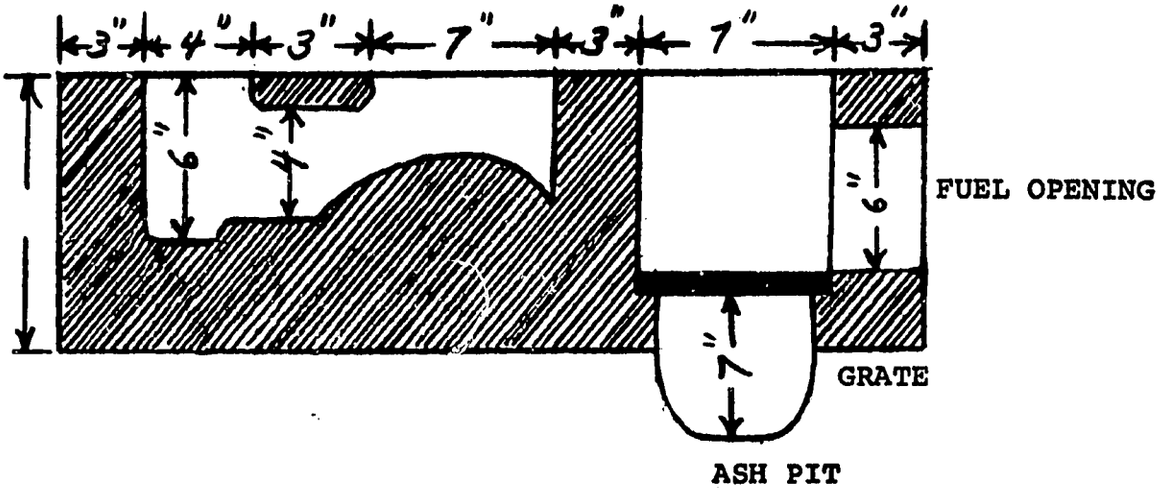

VIEW ALONG LINE C

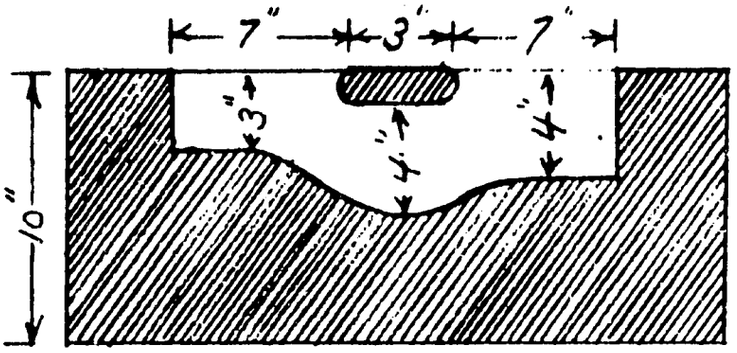

ALL PASSAGES SHOULD BE BRIDGED AS SHOWN:

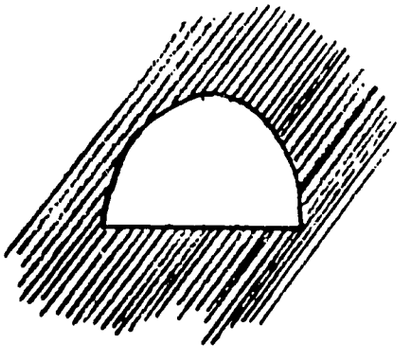

VIEW ALONG LINE B

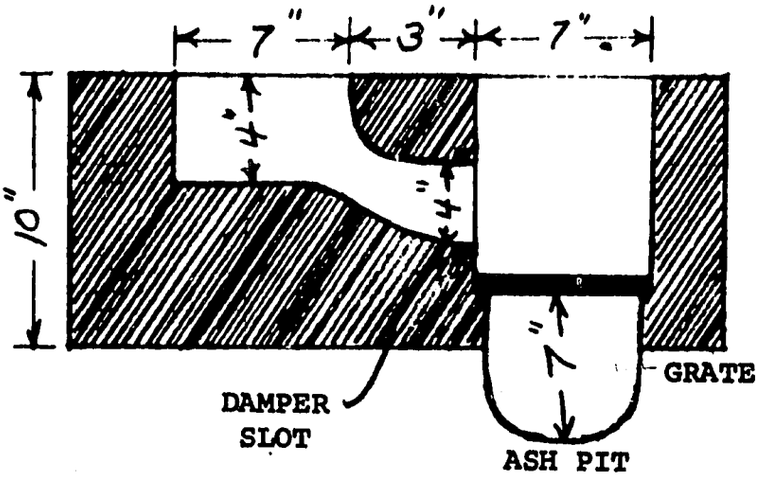

OUTDOOR OVEN

Abstract

An outdoor oven is easy to build and good for baking bread, potatoes, beans, cereals, cakes, etc.

Materials

Adobe or brick
Wood or metal for door and smoke hole covers
Clay for plastering

Details

Lay the bricks on the ground to make a square, four foot by four foot by one foot high, on which to build the oven. After making this base, build the oven walls in an oval shape as shown in the drawing. Cut the brick corners as you lay the bricks.

Leave a front opening about three feet high and two feet wide for the oven door. Leave a small opening at the top so the smoke can escape.

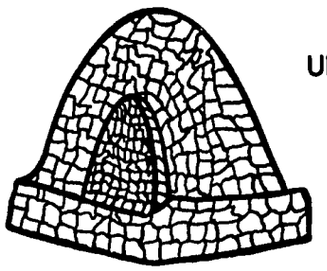

UNPLASTERED OVEN

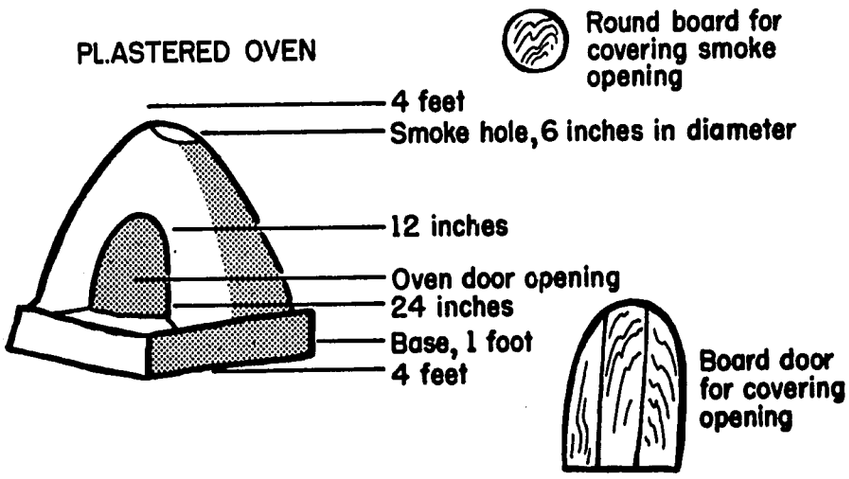

Now make wooden or metal covers that fit tightly over the door opening and smoke-hole in the roof. It is important that these fit tightly so that no hot air can leave the oven, when closed.

Plaster the inside and outside with a clay mixture or cement.

When using the oven...

- open the smoke-hole and door, then build a fire in the oven.
- when the fire has burned to ashes, sweep out the ashes.
- put food to be cooked inside the oven. Use trays or be sure the oven floor is very clean.
- cover the smoke-hole and door opening...very tightly.
- bake bread for one to 1½ hours and other foods until they are cooked.

Evaluation

This type of oven has been used in villages throughout South Asia.

Material from: Home-Making Around The World, Department of State, Agency for International Development

HOME SOAP MAKING

Abstract

This method will make 9 pounds of a good quality soap, but can be changed as long as the general principles are followed.

Tools and Materials

Enamel kettle (steel kettles may corrode)
Large wooden spoon
One-half gallon glass or stone jar with cover
Shallow wooden boxes, 1 x 2 feet, with sides
Clean cotton cloth to cover bottoms of boxes and 1 to 2" up the sides.
Materials to keep heat in the boxes while the soap cures (the wooden box can be placed in a cardboard box with dry leaves, cloth or dry straw between the wooden box and the cardboard box)
Thermometer, 0 to 150 degrees fahrenheit (0 to 65 degrees centigrade)

Details

Use six pounds of animal fats or vegetable oils, 2½ pints of soft water and ½ pounds of high grade lye (sodium hydroxide of caustic soda).

- If you want a hard soap for use in hot water, use six pounds of tallow made from melting rendered sheep, cattle or horse fat.

- If you want a good laundry soap, use 3 pounds of tallow and 3 pounds of lard or cooking grease from melted hog fat, skin and bones.

- If you want a fine toilet soap, use 3 pounds of tallow with 3 pounds of vegetable oil.

The best vegetable oils are made from crushing dried coconut meat, palm nut kernels or the outer pulp of the palm nut. The last makes a harder soap than the coconut meat or kernels. Other oils that can be used are castor oil, olive oil, cottonseed oil, soybean oil.

If you do not have rainwater, you can make soft water by adding a pinch of lye to ordinary water. Allow to sit for 3 or 4 days until the hard particles settle to the bottom (a pint of water weighs one pound).

Important...lye burns the skin. Do not breath the dust or spill the solution on you. Wash thoroughly with a large quantity of water, wherever it touches your skin.

The next step is to prepare the lye solution and melt and mix the fats and lye solution in a pan or crock.

Lye solution:

- pour 2½ pints of soft water into the glass jar
- pour the lye slowly into the water. Feel jar so that heat does not become too hot. If it does, wait, then pour in lye more slowly
- when all of lye is in water, stir until it is completely dissolved and cover the jar
- cool the solution to about 70 degrees F (21 degrees C) (place in stream of water, if air is too hot)

Melt the fats and stir them thoroughly until the wooden spoon leaves a track in the mixture or the fats reach the correct temperature for mixing with the lye solution (temperatures are shown below). Add the lye solution by pouring it slowly into the fat in a thin stream while stirring slowly, steadily, and in one direction. Keep stirring until all of the lye solution has been mixed with the fat and the mixture has the thickness of honey.

Correct temperatures for mixing...

- mix tallow at 130 degrees fahrenheit (54 degrees centigrade) with lye solution at 90 degrees F (32 degrees C), for hard soap.
- mix tallow combined with lard at 115 degrees F (46 degrees C) with lye solution at 80 degrees F (26 degrees C), for laundry soap.
- mix tallow combined with vegetable oils at 130 to 135 degrees F (54-57 degrees C) with lye solution at 85 degrees F (29 degrees C), for fine toilet soap.
- in hot weather, the temperatures should be about 10 degrees F less for the fats and 2 to 4 degrees F (1 to 2 degrees C) less for the lye.
- rancid fat will need about 10 degrees more heat than 'sweet' fat.

it is better to have the fats too hot than too cold, but the mixture should remain at the thickness of honey.

Pouring the soap...

As soon as the proper thickness is reached, the soap should be poured. The curing box should be made ready while the fats are being melted. Prepare the wooden box by lining it with cotton cloth, wrung dry after soaking in hot water. It is very important that the box be well-insulated, since the soap-making will need a long-time and the heat must be kept in the box.

Pour the soap mixture gently into the curing box, without splattering. Then place the curing box in a warm room where there are no drafts and it will not be jarred. It is important that the curing box is not moved or struck, after the soap is poured, as the fats and other solutions will separate and ruin the soap.

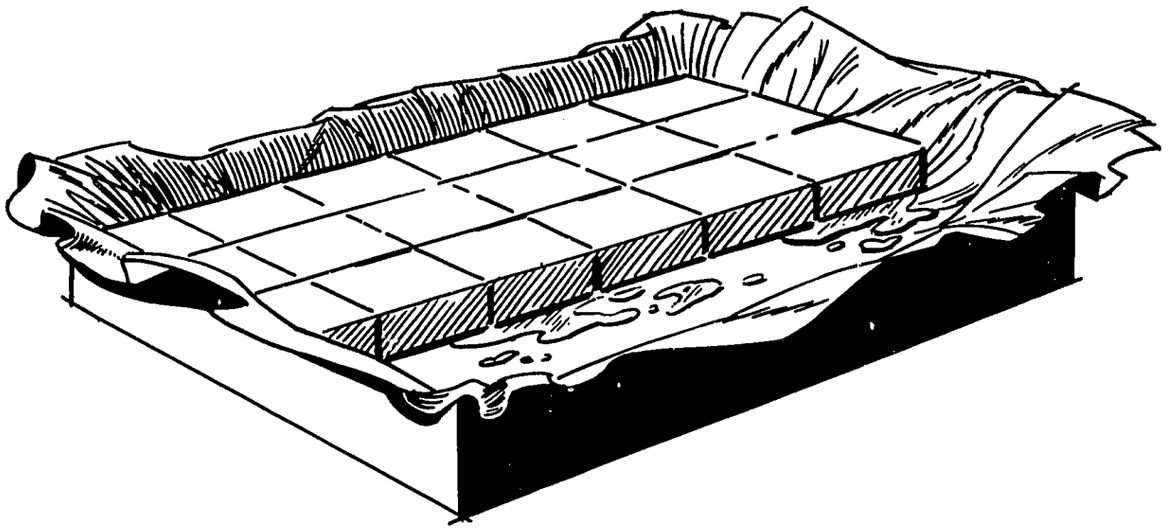

Testing the soap...

At the end of 24 hours, cut off a corner of the soap along its length. If there is no grease on top or liquid on the bottom, turn the box over and remove the soap. Cut into bars with a wire or string.

If there is grease on top of the soap, at end of the first 24 hours after pouring, leave the soap in the curing box for 48 hours or until the grease disappears, then cut the soap into bars.

If there is liquid at the bottom of the pan, when the soap is cut at the end of 24 hours, cut the soap into small squares with a knife and let it stand until all the liquid disappears. If the liquid does not disappear, shave the soap and put it back into the kettle. Add seven pints of water and the liquid remaining in the box. Stir the mixture slowly to the boiling point. When the materials melt together into a smooth mixture, pour the mixture again into the curing box.

Curing and storing...

Cure the cut bars of soap at least two weeks before using to allow any free lye to finish curing the soap. Toilet soaps, however, need at least another two weeks for a total of four or more weeks of curing. Do not allow curing soaps to freeze.

Other points...

A greasy soap shows a shortage of lye or not enough curing time.

Hard crumbly soap may be caused by too much lye or too hard stirring.

Hard brittle soap can be caused by too low a temperature before setting.

A good soap will shave off in a curl and have little or no taste. If it has too much lye, it will bite the tongue. This is important as a soap with too much lye will fade clothing, weaken cloth and injure the skin.

Evaluation

This formula was prepared and tested by the Agricultural Extension Service, Iowa State College, Ames, Iowa.

With proper care and practice, good quality soaps can be made for home use. Other processes using more equipment should be used for making soap commercially.

Material from... Technical Inquiry Service Report IR 25097 Encyclopedia of Chemical Technology, edited by Kirk and Othmer, Volume 12, Interscience Encyclopedia, Inc. New York, 1954

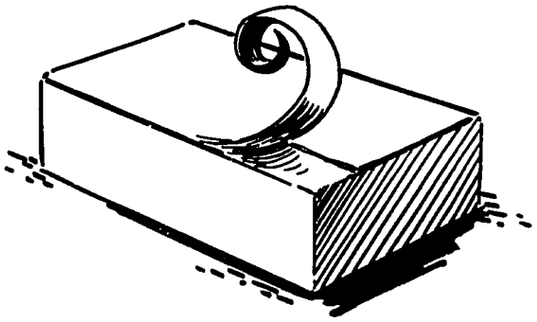

A NEST OF LOW-COST BEDS

Abstract

This nest of beds will give extra space in a small room, during the daytime, as they use only the space needed for one bed.

Tools and Materials

Carpenter tools
1 by 3 inch wooden boards of varying lengths
2 by 2 inch wooden posts of varying lengths
Nails and paint
Chicken wire, bailing wire, burlap, webbing, rope or wood for the 'spring' of the bed

Details

All of the beds are the same width but the length and height of each bed varies so they fit under each other.

The largest bed is made first. It uses...

- 2 boards, 1 by 3 by 72 inches
- 2 boards, 1 by 3 by 36 inches
- 4 legs, 2 by 2 by 20 inches

Nail the legs to the ends of each of the 36-inch boards. Then join these boards by nailing the 72-inch boards to them, so they appear as in figure 1 when finished. This completes the framework and it is now ready for the spring to be attached.

The spring can be made by nailing chicken wire, bailing wire, burlap, wood or webbing to the frame. Another method, as used in South Asia, is to bore holes in the framework and pass rope through the holes as shown in figure 1.

The other two beds are made in the same way and use the following materials...

Second bed:

- 2 boards, 1 by 3 by 66 inches
- 2 boards, 1 by 3 by 36 inches
- 4 legs, 2 by 2 by 15 inches

Smallest bed:

- 2 boards, 1 by 3 by 60 inches
- 2 boards, 1 by 3 by 36 inches
- 4 legs, 2 by 2 by 10 inches

Evaluation

These beds are low-cost, easy to make from local materials and are used in many nations.

Material from: Home-Making Around The World, Department of State, Agency for International Development

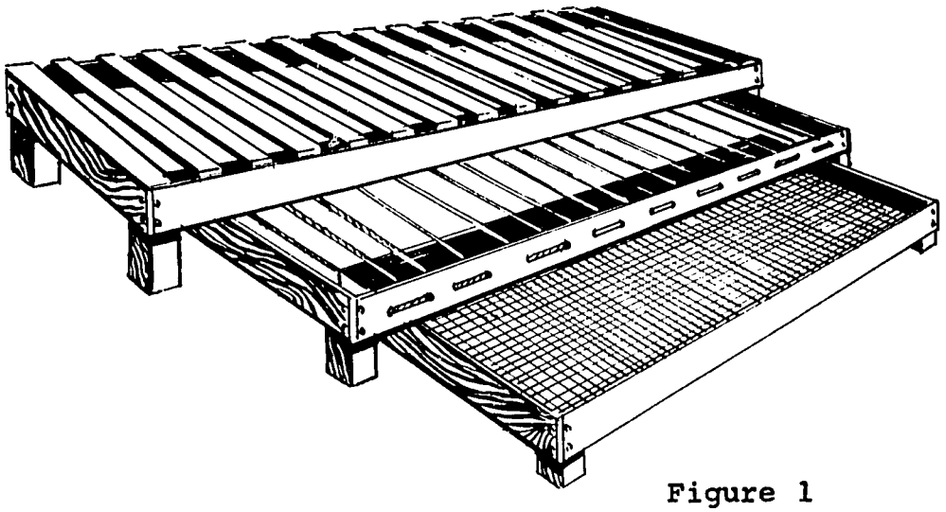

Figure 1

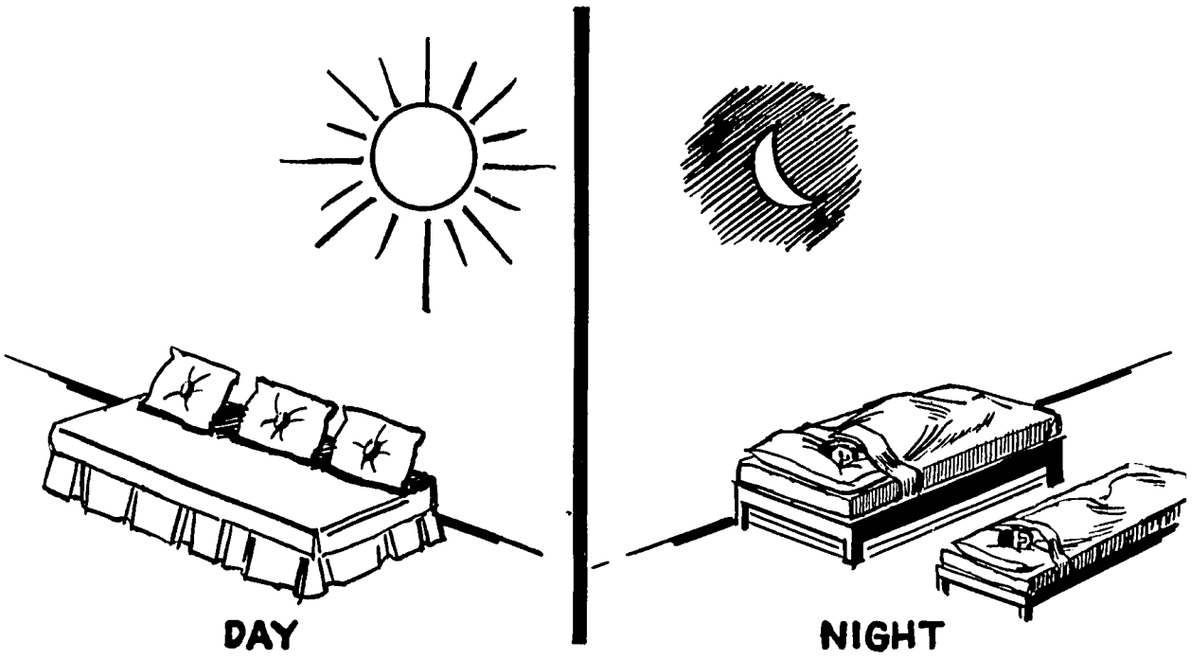

A LOCALLY-MADE MATTRESS

Abstract

This low-cost mattress is easy to make from local materials. It can be used for sleeping at night and for a sofa by day.

Tools and Materials

Corn shucks, rice or wheat straw, hay, banana or palm leaves
Strong needles and waxed cord
Oil felt or double-thickness ticking cut in a round shape.

Details

The making of a pad or mattress for the low-cost bed shown in this handbook will interest many women. In Brazil, one villager made such good corn-shuck mattresses that he started a small factory.

The first step is to dip the corn shucks in boiling water and while they are still moist, shred them into small strips with a hand paddle that has small nails in it. The tough top part of the shuck is then cut off with a sharp knife. When dry, the shredded corn shucks are ready for use.

Cut six pieces of cloth...

- two pieces the size of the bed to make the top and bottom of the mattress
- two pieces 6 inches wide and the length of the bed for the mattress sides
- two pieces 6 inches wide and slightly longer than the width of the bed, for the ends of the mattress

Sew the pieces together so they form a box with square corners, but leave one side open for putting in the corn shucks or other material used for filling the mattress. Twelve feed sacks full of tightly - packed corn shucks are enough for a double-bed mattress. A single bed mattress needs less.

Beat the shredded corn shucks or other filling materials when packing them into the cover, so they are distributed evenly. When all of the material is inside the cover, sew the open side in place and again beat the mattress for better distribution of the material.

Use the strong needle and waxed cord for sewing the round pieces of doubled ticking for simple tufts that will hold the filling in place.

Evaluation

These mattresses are used in rural Brazil.

Material from...Home-Making Around The World,
Department of State, Agency
for International Development

POTTER'S WHEEL SEWING MACHINE DRIVE

ABSTRACT

This device allows a hand cranked sewing machine head to be operated by foot power.

TOOLS AND MATERIALS

Wood - (Soft wood is suitable)

	3/4" x 4"	(14' + 40" + 53" + 97") = 16 + 14 = 30	
		top	wheel
	3/4" x 3"	50"	(support for wheel)
1	1/4" x 4"	10'	(uprights)
1	1/4" x 3"	5'	(lower side)

Wood working tools
Nails, woodscrews or bolts
Glue

DETAILS

An attempt was made in designing this drive to incorporate the following: (1) Simple construction, especially concerning bearings and other close fitting elements. (2) A positive drive through one cycle of the machine which is intented to eliminate the need for a flywheel. Better control by the operator especially at slow speeds should result. (3) Use of readily available materials. (4) Use of elementary tools to construct the drive.

The Table - See Figures 1 and 2
Only general dimensions are shown and these may be altered to accommodate materials on hand. The foot wheel, as shown, will fit between the leg braces with only 1/2" clearance. If the brace thickness is increased, the entire table should be widened accordingly. It is also important that the center of the foot wheel be placed directly under the needle of the sewing head and this should be considered when and if dimensions are changed.

The table can be fastened with nails, wood screws or bolts with nuts.

Dimensions of the members are ample for softer woods such as white pine or its equivalent and could be reduced by 1/3 for woods such as hard maple.

The Foot Wheel Assembly - See Figures 3 and 4
The foot wheel is made by sandwiching a disc built up from 1/2" to 3/4" stock between two larger discs as shown. The flanges (larger discs) are about 1/4" thick and made from pressed board, plywood or boards nailed perpendicular to those used for the core.

The shaft should be from 1" to 1 1/2" in diameter and can be made from solid rod, tubing or pipe. It should have a smooth outer surface. The ends of the shaft are fitted into holes bored part way through the cross members as shown.

A bushing which provides a free running fit on the shaft is pressed into a hole bored through the center of the foot wheel. This bushing should be slightly longer than the wheel is thick to provide a bearing surface on the thrust washer shown. The bushing can be made of hard wood or metal or can be made of wire as described later.

The Pulleys - See Figure 5
The pulleys are turned from wood or cut from dowels and are also fitted with bushings as described above. They should be from 2" to 3" in diameter and 3" long. It may be found that a flange is required depending on the alignment of the foot wheel, pulleys and sewing head. Many manufactured pulleys and sheaves could be adapted here, if available.

The shaft is approximately 1/2" to 3/4" in diameter and fitted to the frame as shown.

The Belt - See Figure 1
Waxed cording or a flat strip of leather can be used to make the belt. It should be of such a length as to provide enough tension to prevent slipping.

Wire Bushings - See Figure 6
Satisfactory bushings can be easily made using brass, copper or steel wire. A wooden dowel just under the shaft diameter is slotted to accept the wire as shown. The wire is then wrapped around the dowel until the proper length is reached. The dowel with wire is inserted in a hole equal in diameter to the shaft diameter plus two times the wire diameter. The ends of the wire are clipped off after the dowel is removed and the coil has unwound. The wire diameter should be about the size of coat hanger wire.

EVALUATION

A working model of this design has been constructed and performed satisfactorily. The speed of sewing is limited with this drive.

Material From - Paul C. Setzler
VITA Participant

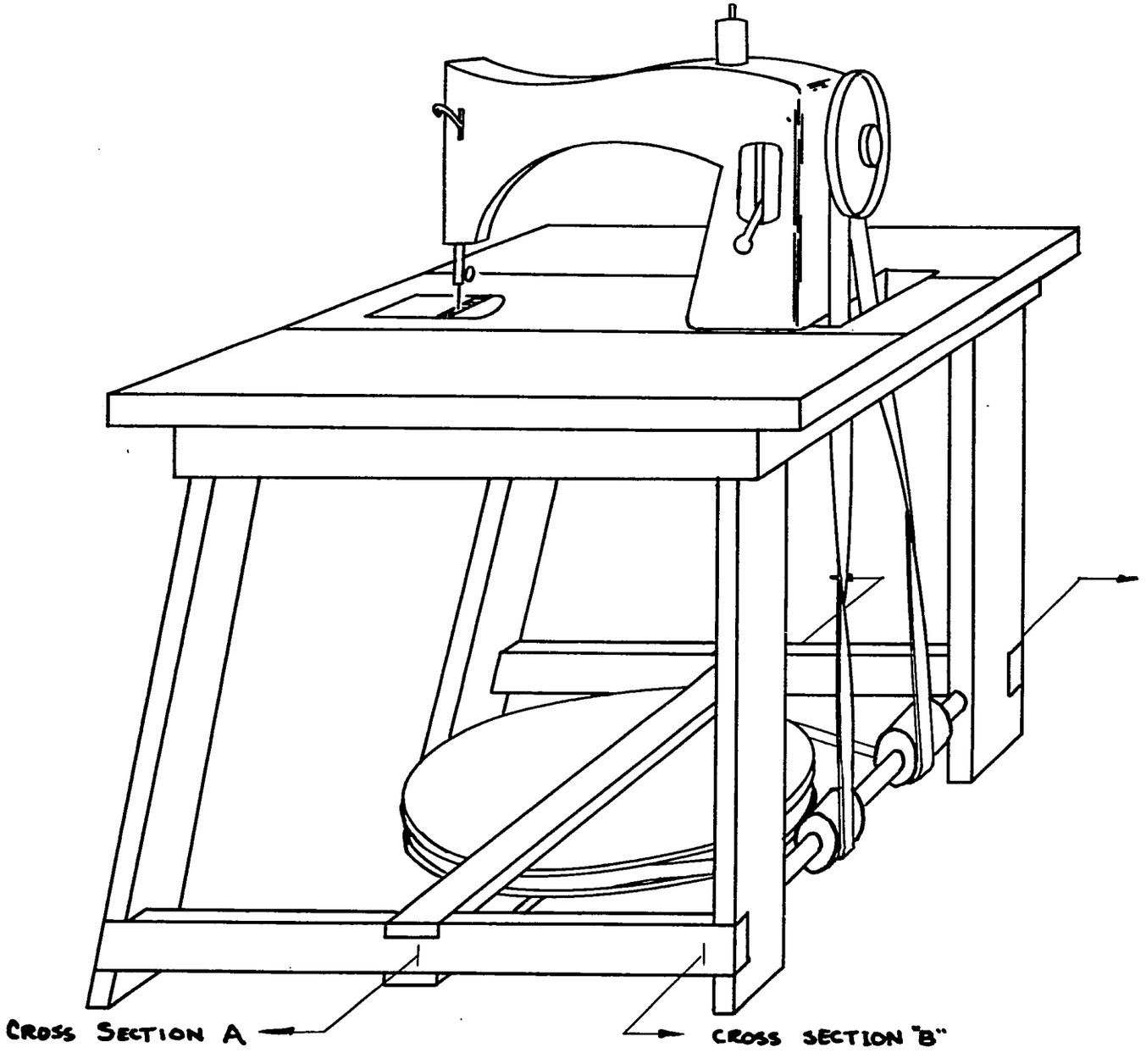

FIGURE 1
"POTTER'S WHEEL"
SEWING MACHINE DRIVE ASSEMBLY

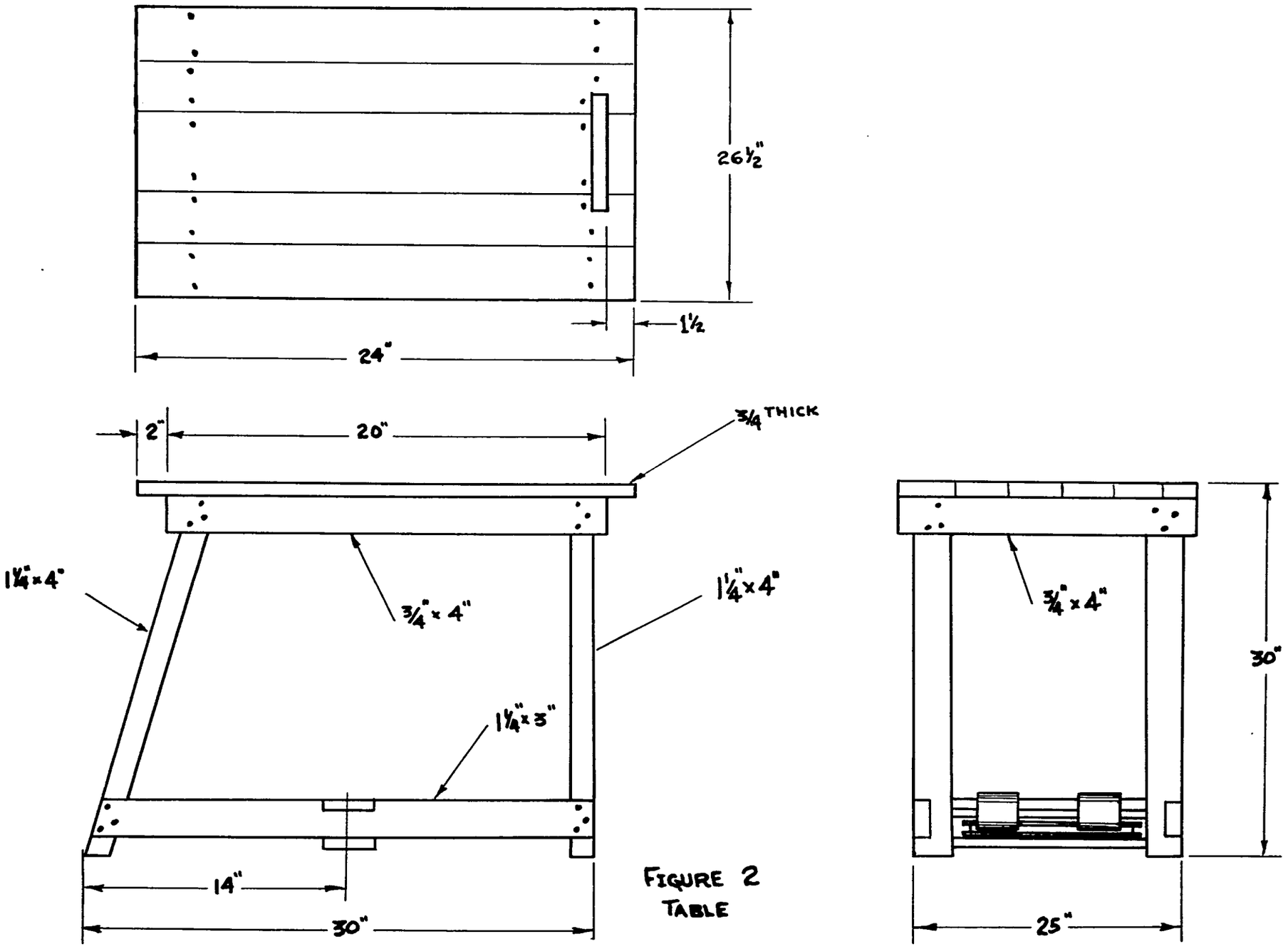

FIGURE 2
TABLE

FIGURE 3- FOOT WHEEL DETAILS

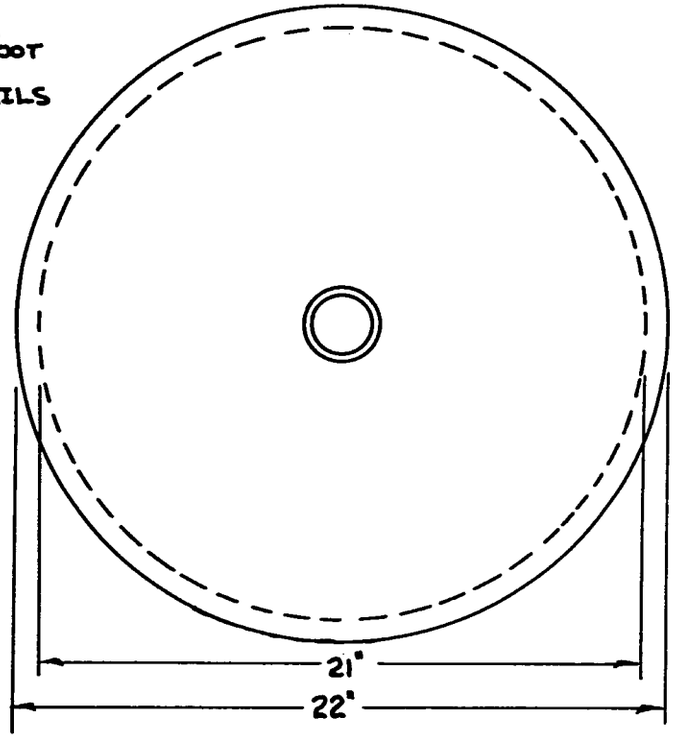

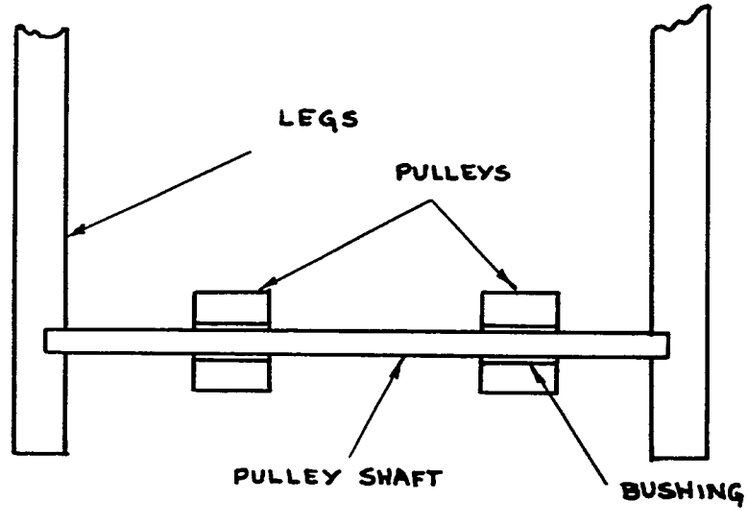

FIGURE 5 - CROSS SECTION B SHOWING PULLEYS

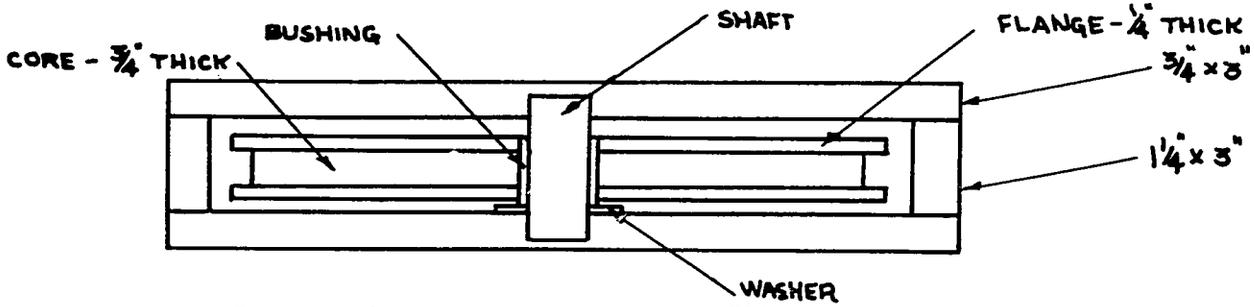

FIGURE 4 - CROSS SECTION "A" SHOWING FOOT WHEEL CONSTRUCTION

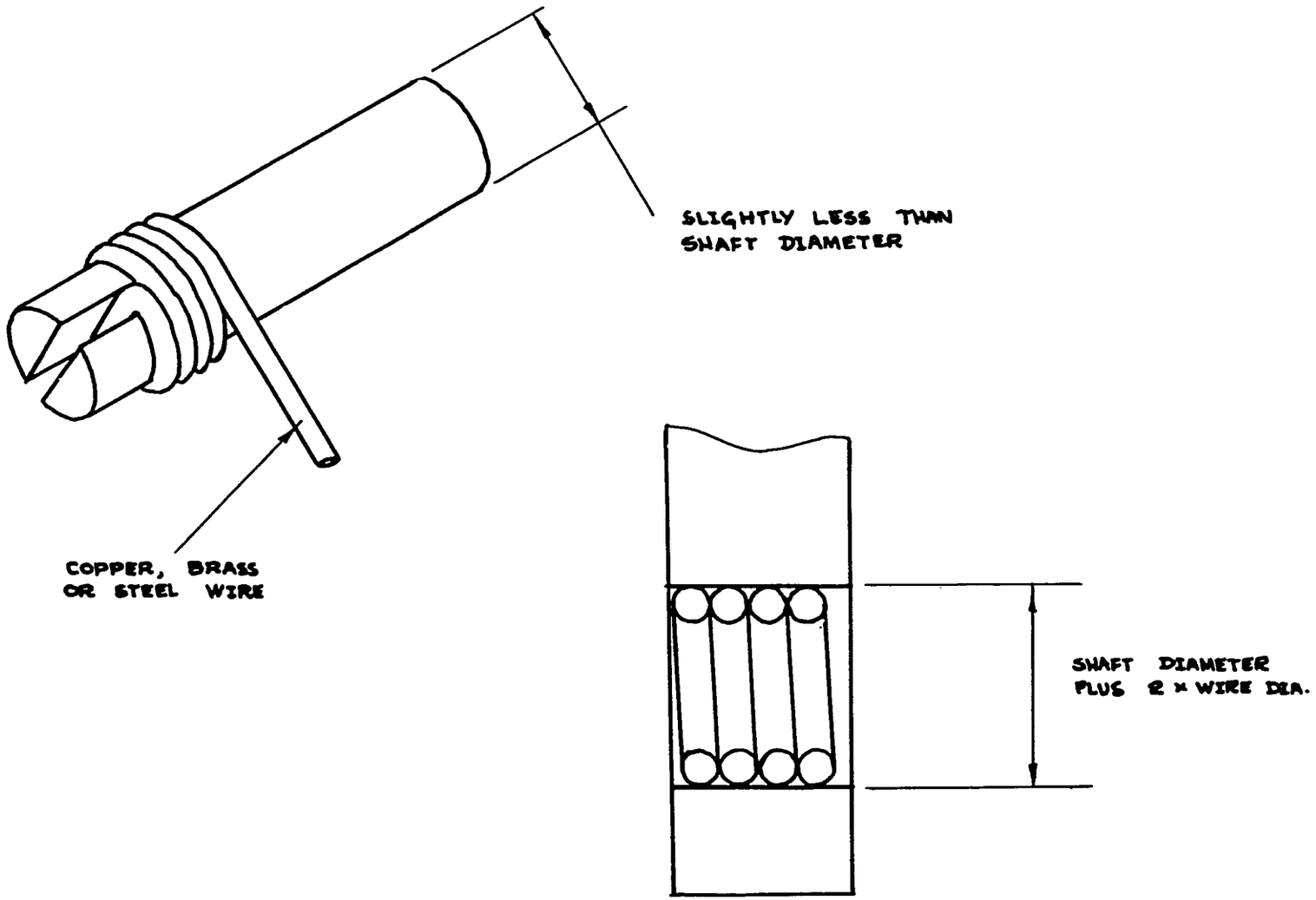

FIGURE 6
MAKING WIRE BUSHINGS

SMALL RECTANGULAR KILN

ABSTRACT

The small kiln described is designed to provide facilities for both bisque and glaze firing of small pottery pieces. The size may be adapted to requirements, the capacity varying according to the foundation base area.

TOOLS AND MATERIALS

Common (pressed) brick
Firebrick (note: Sandstone blocks were used before the invention of firebrick)
Clay or mortar

DETAILS

Construction

Dimensions shown on the accompanying drawings are based on the 9" straight brick (9" x 4 1/2" x 2 1/2") commonly found in the U. S. In general one should change the dimensions to make construction convenient with respect to locally available brick.

The joints in this kiln except for the loading portion should be slightly mortared. The preferable material is a refractory cement. (What does the local brick plant use?) If this is not available, make one by mixing crushed fire clay brick with your purest clay which would be white or light in color. As a last resort use clay alone. In any case, keep the joints as thick as possible. Each time the door is built it should be mortared with the purest clay available.

In laying up brickwork try to arrange for the joints of the second tier to miss the joints of the first one. This will cut your heat losses.

Excavate a hole 7 1/2" x 30" x 49 1/2" (or whatever base size is needed to accommodate available brick) in level ground. Note in drawings that the first three horizontal courses are first, gravel or common brick; second, common brick; and third, firebrick. These bricks extend under the fireboxes. If charcoal, coke, or coal is used as a fuel, a grate should be used in the firebox. (Note: firebox is constructed out of firebrick with an open end for loading.)

The kiln consists basically of a long rectangular chamber fired from both ends so that the hot gases flow inward. Between, and above the fireboxes is the kiln chamber in which the pottery is placed. The hot gasses rise through the chamber and rise vertically through the chimney opening above the chamber. The chamber and firebox are surrounded by a layer of clay bricks. The brick arrangement is indicated in Figures 1 through 5. Note that alternate courses are layed so that joints are staggered.

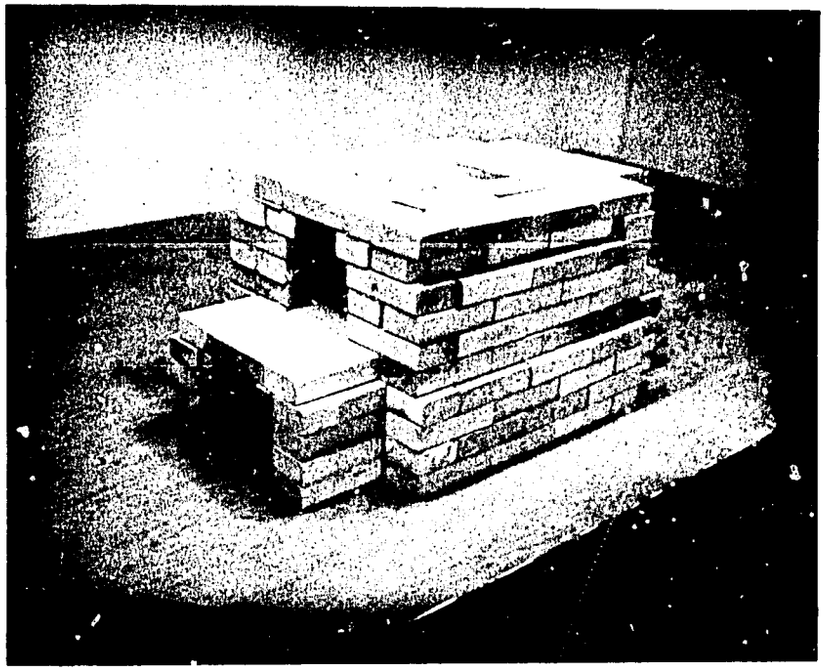

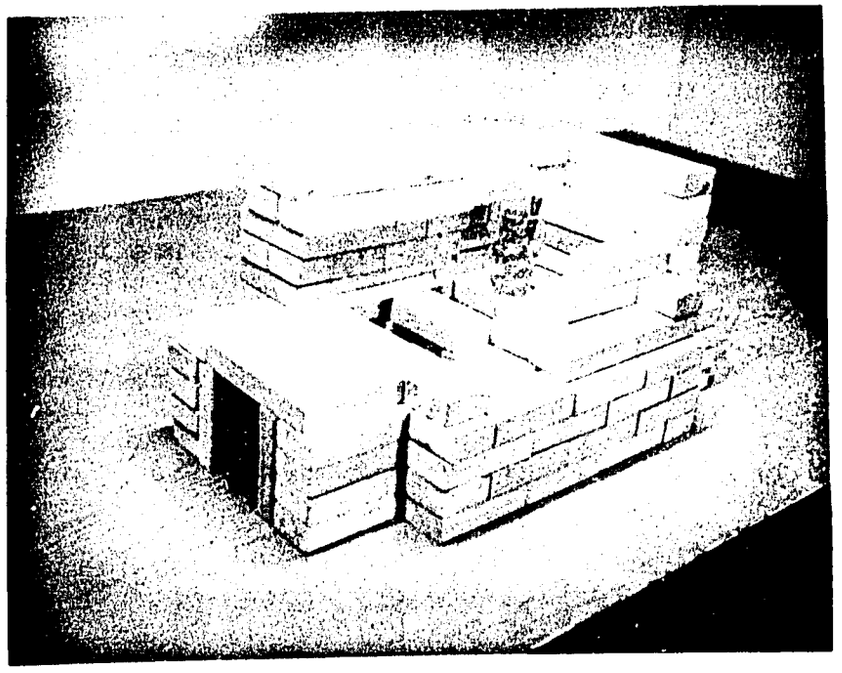

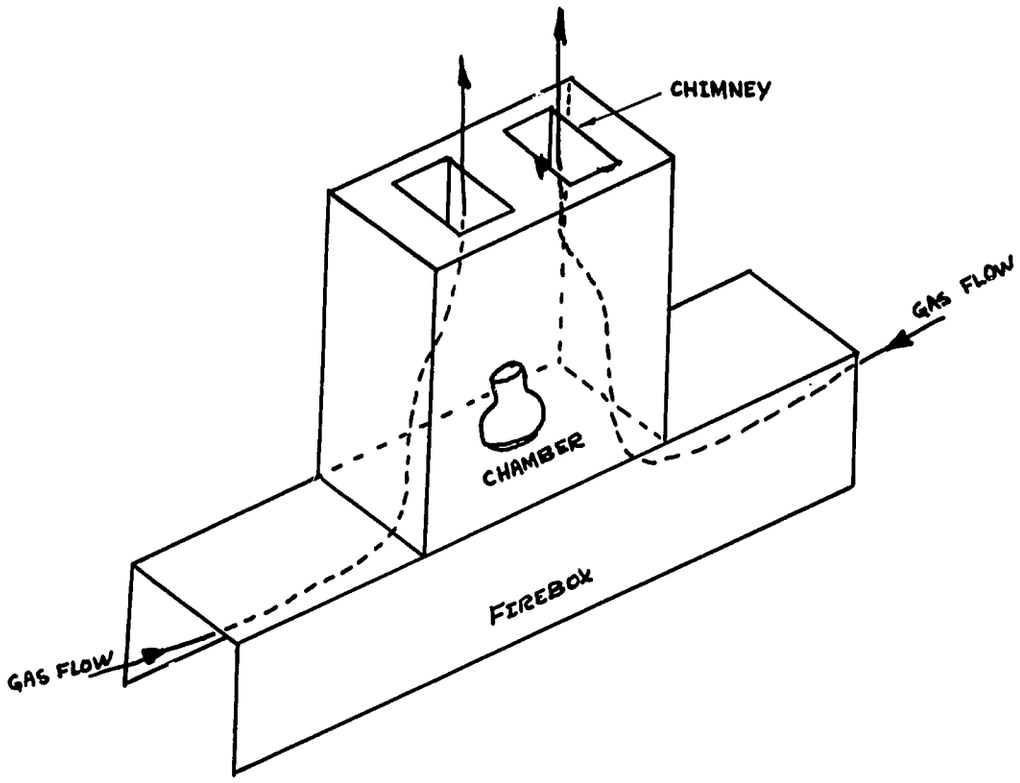

After construction, sides of kiln should be insulated with dry loose sand and/or crushed brick.

If the kiln is in the open, cover the loose insulation and brickwork to prevent it from getting wet. Sheet metal would be a suitable material. If large pieces are not available, build a shingle arrangement from flattened tin cans.

In building up the door after loading, be sure to leave a peep hole which can be used to keep sight on one of the objects being fired.

Firing

The first time the kiln is fired, heat-up will take longer than normal and require extra fuel because the kiln must be dried out.

First, be sure that your ware is completely dry, i.e. sun bake it.

Load the kiln on the shelves. Be sure to leave enough area for adequate ventilation. Place the dry "green pots" in the kiln on the floor and shelves. They may be closely nested or stacked without damage during this first bisque firing.

After the kiln has heated up somewhat it will conserve fuel to cut down on the draft. Do this by using bricks to reduce the top flue openings.

In the absence of experience and temperature indicating devices, here are suggestions on firing procedures. - When the object has shrunk 10 to 20%, the firing is probably completed. This shrinkage should begin at about 1600° F. The following color scale will be helpful.

Lowest visible red	885° F.
Lowest visible red to dark red	885 - 1200° F.
Dark red to cherry red	1200 - 1380° F.
Cherry red to bright cherry red. . . .	1380 - 1500° F.
Bright cherry red to orange.	1500 - 1650° F.
Orange to yellow	1650 - 2000° F.
Yellow to light yellow	2000 - 2400° F.

Several hours at 1600° F. and up will be required to complete the firing. Heating to 1600° F. should be slow, taking approximately 8 hours. During the heat-up period many chemical and physical changes take place, some of which can destroy the ware if they occur too rapidly. For example, dehydration of clay and other minerals cover the entire temperature range but are particularly marked between 900° and 1500° F. Oxidation of organics, sulfides, etc., occur between 1100 and 1800° F.

After the firing is completed and the fire is out, slow the cooling by blocking the flue opening and the firebox opening. Let stand overnight undisturbed. These ports will have to be opened again at lower temperatures. This practice can prevent cracking of the ware due to thermal stresses. Slow cooling through dark red heat is most critical.

EVALUATION

An unknown clay body requires experimentation, therefore times of heating and firing, etc. may vary from these numbers stated.

Material From - Irwin M. Lachman
VITA Participant

FIGURE 1

RECTANGULAR KILN END VIEW

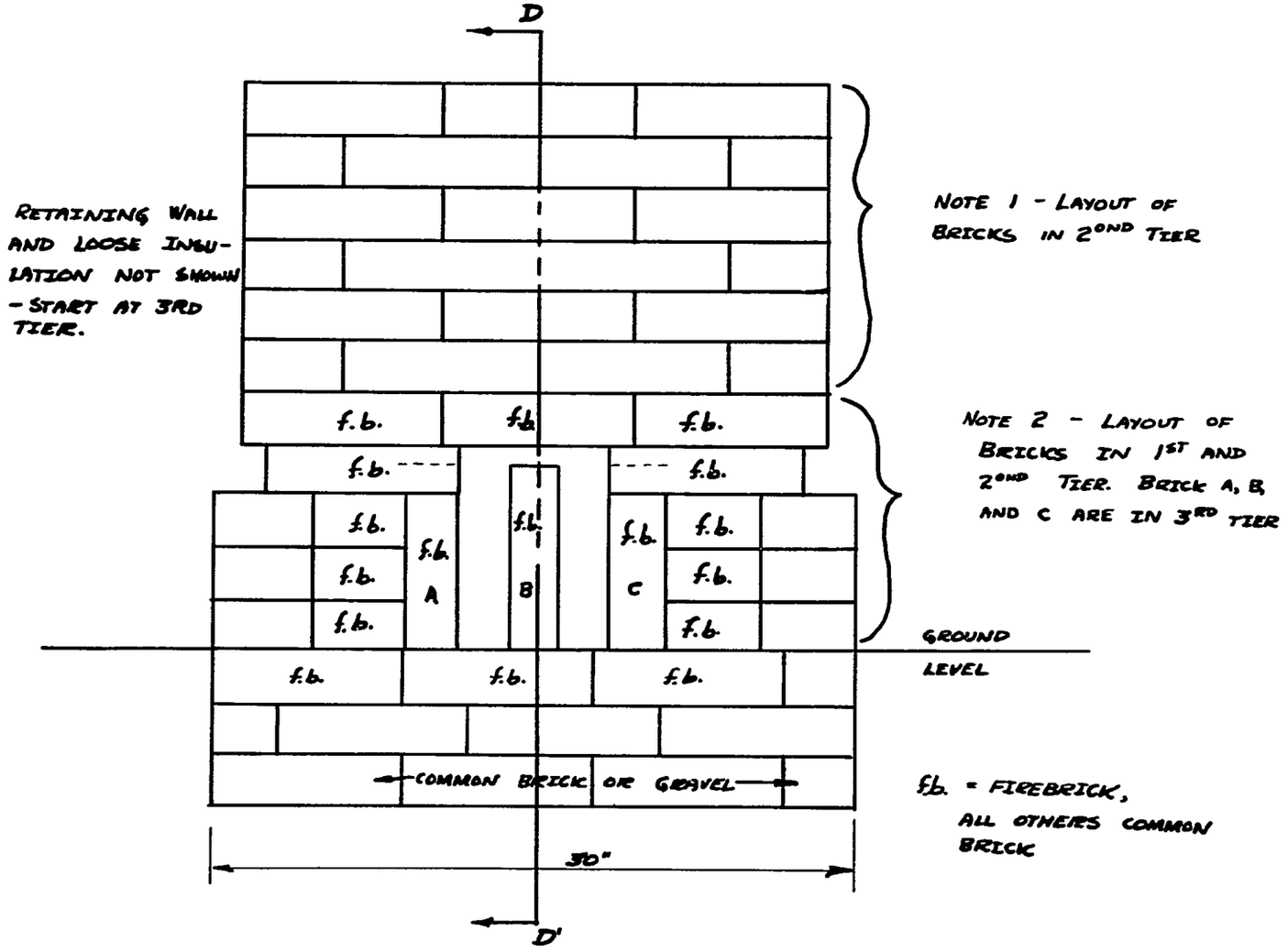

FIGURE 2
RECTANGULAR KILN SECTION DD'

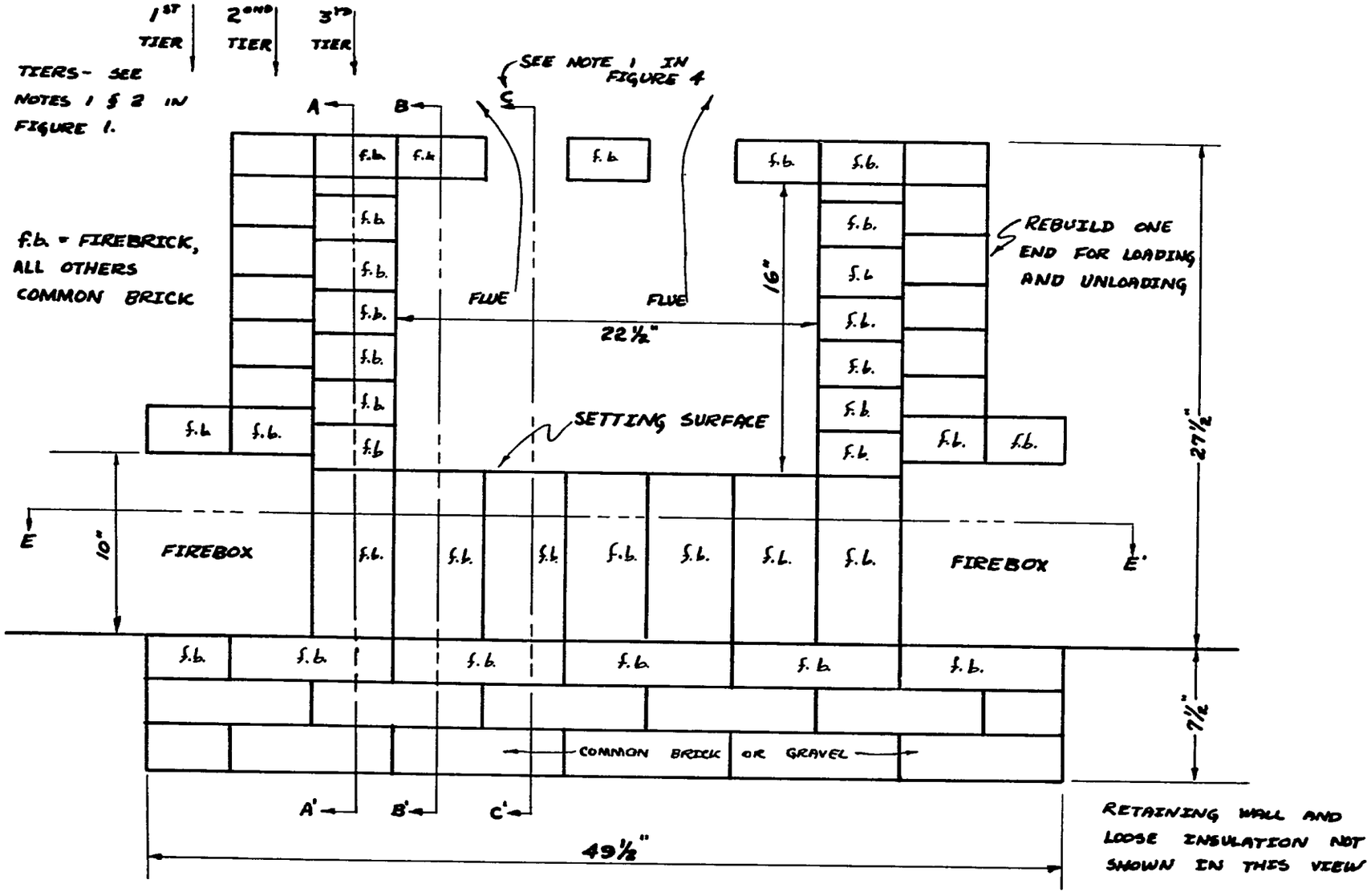

FIGURE 3
RECTANGULAR KILN SECTION A-A'

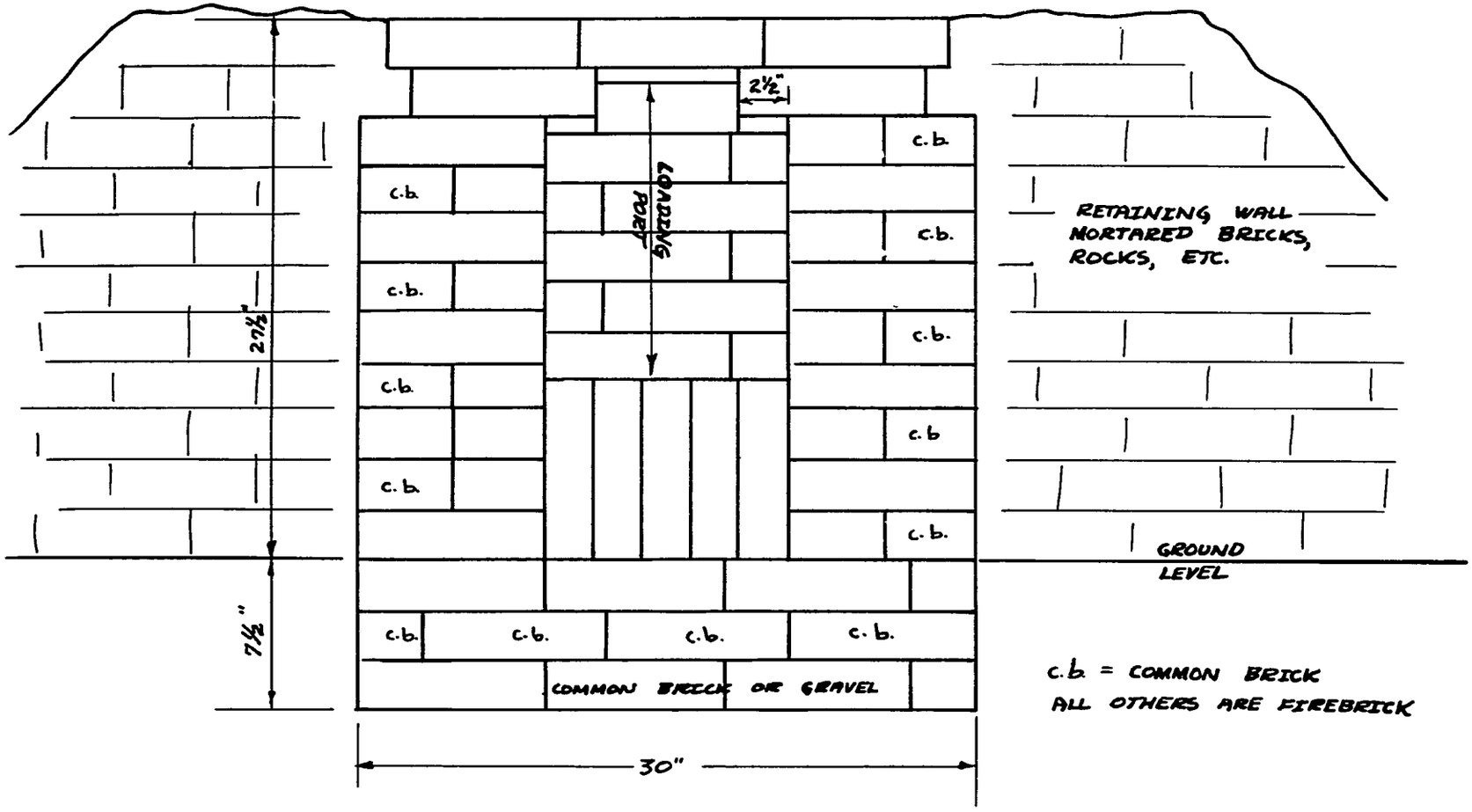

FIGURE 4
RECTANGULAR KILN SECTION BB'

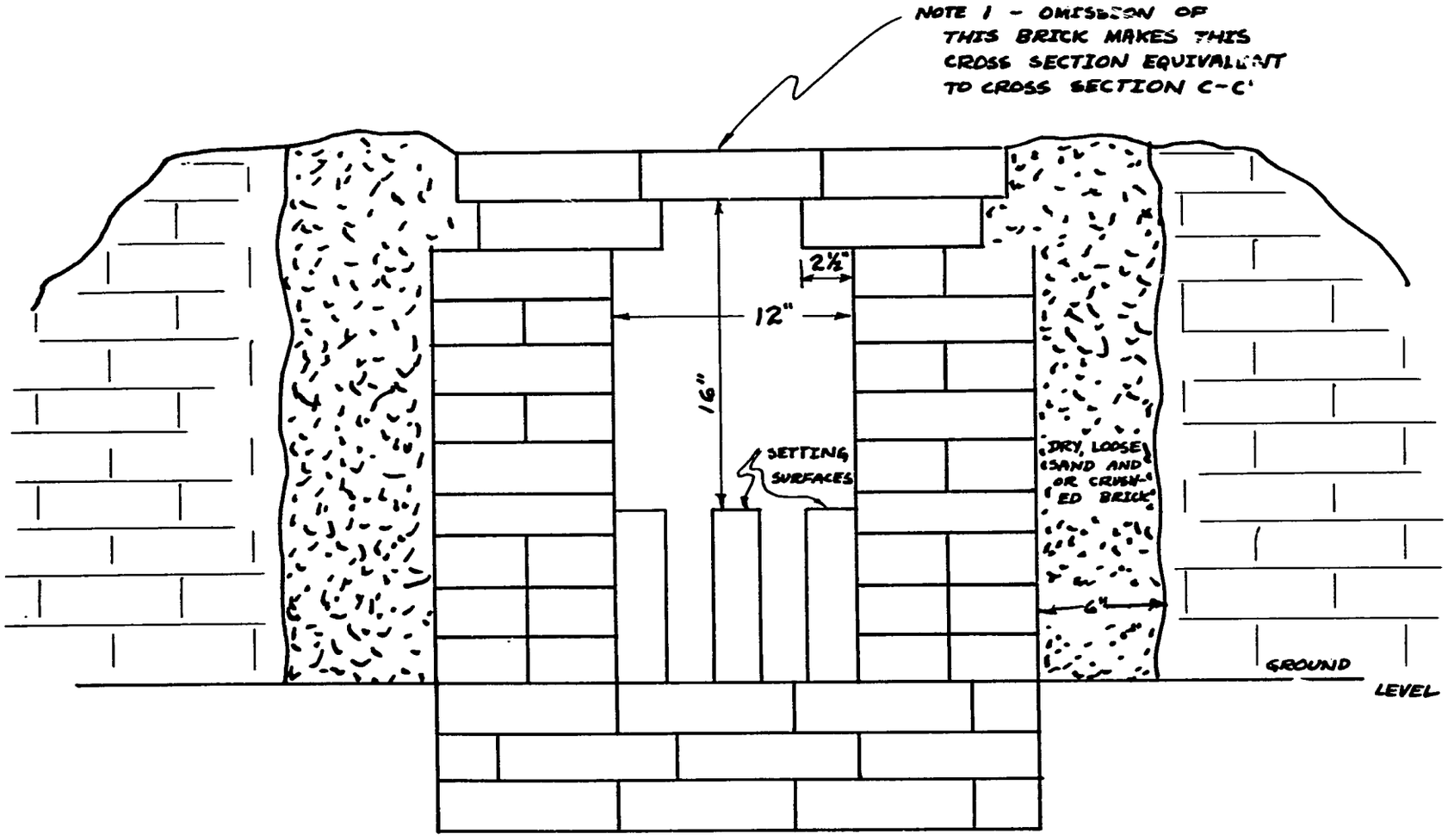

FIGURE 5
RECTANGULAR KILN SECTION EE' (PLAN VIEW)

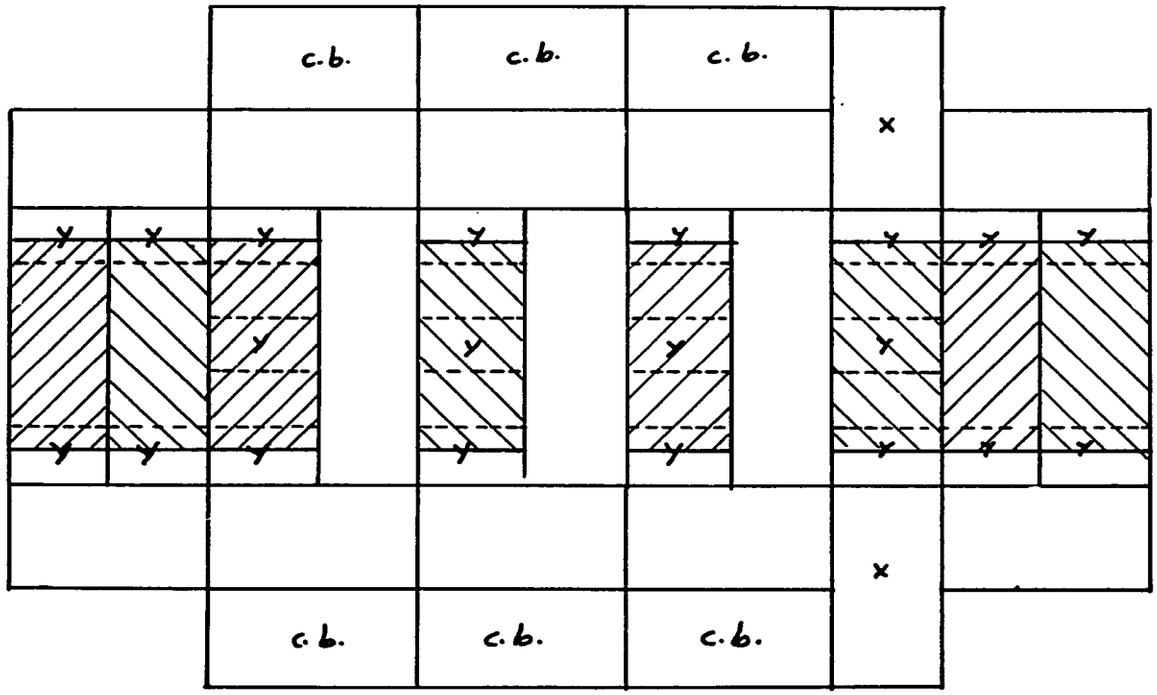

c.b. = COMMON BRICK, ALL OTHERS ARE FIREBRICK.
SHADED BRICKS ARE PLACED ON TOP TO FORM SHELVES AND TOP OF FIREBOX.
ALTERNATE LAYERS FORM MIRROR IMAGES- i.e. BRICKS "X" ARE ON LEFT.
BRICKS "Y" ARE STOOD ON END TO SUPPORT SHELVES

SALT GLAZE FOR POTTERY

ABSTRACT

A method for applying a glaze to pottery that has already been bisque fired.

TOOLS AND MATERIALS

Salt
Borax or Boric acid (preferable)

DETAILS

The pottery to be fired is placed on the shelves of a kiln--with the capability of being fired to 2000° to 2400°F. The pieces should not touch and ample room should be left for ventilation.

At the hottest stage of the burning process a small shovelful of a mixture of 9 parts salt with 1 part Borax or Boric acid, dampened with 10% water is thrown into the firebox. This is repeated several times after the temperature has returned to original point and the kiln is then slowly cooled. On completion of the salting, the glaze has a gray color--the brown color develops when the ware is cooled.

EVALUATION

Open pieces, such as bowls will become glazed on the inside, whereas narrow-necked pieces must be glazed by a slip glaze method.

Certain ceramic bodies will take a salt glaze, whereas others will not under certain conditions. Experimentation is the best way to discover the properties of an unknown clay.

Material From - "Salt Glazing of Ceramic Ware" by H. G. Schurecht from an article in - Bull. of The American Ceramic Society, Vol. 23, No. 2

COMMUNICATION

INDIA

INEXPENSIVE RUBBER CEMENT

Abstract

Inexpensive rubber cement can be locally made with ordinary gasoline and raw sheet rubber.

Tools and Materials

250 c.c (16 ounces) of ordinary gasoline
5 grams of raw sheet rubber in one piece (1/5 ounce)
1 jar with lid
1 stirring rod
1 tin can*
Charcoal*
Small pieces of cloth*
1 brown bottle

*Necessary only if gasoline is colored

Details

Imported pastes are too expensive for most school systems or other local use. Also these pastes do not make a good job when mounting pictures and other materials. They soak through the paper and wrinkle both the picture and mount.

Rubber cement does not soak or wrinkle the pieces to be joined. It has another advantage; if smeared, it can be rubbed off cleanly with a finger when dried.

It is simple to make rubber cement. To make about one pint of rubber cement, place the five grams of raw sheet rubber in a covered jar with 250 c.c. of ordinary gasoline. The rubber must be the translucent, light brown sheet kind. Any brand of gasoline can be used.

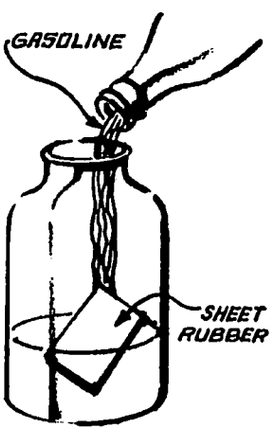

MIXING

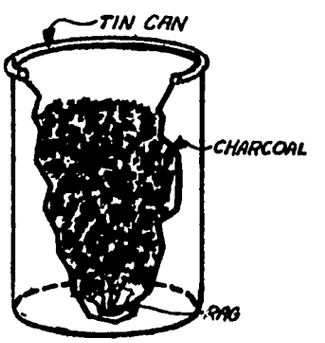

FILTER

DISPENSER

About three days are needed for the rubber to completely dissolve in the gasoline. Stir the mixture several times during these days, particularly when the mass becomes thickened, and a smooth milky colored cement will be made. If some of the rubber does not dissolve, additional stirring will break it up.

Some gasolines are highly colored. If this coloring is not removed, the cement will stain the paper when used. The coloring can be removed by pouring the gasoline over common charcoal several times. A clean tin can with a hole in the bottom can be used. Put a small piece of cloth in the bottom of the can to keep the charcoal from falling into the filtered gasoline. You may have to change the charcoal several times before the gasoline is clear in color.

It is best to use a brown bottle for storage since rubber cement will become thin if left in sunlight for a long period. Store the brown bottle and cement in a ventilated cupboard, when not in use. A handy dispenser for the cement can be made by cutting a hole in the cover of the jar that is large enough for the handle of a one-inch brush. Push the handle through the hole and leave the brush in the jar. This must be made airtight to keep the cement fluid, since it hardens quickly when exposed to air.

CAUTION: Gasoline will burn and explode. Be careful both when mixing and applying rubber cement.

Material from...RUBBER CEMENT IN A TROPICAL CLIMATE, by Robert J. Bunyard, Consultant, College of Education, Bangkok, Thailand

FLASHLIGHT SLIDE PROJECTOR

ABSTRACT

This inexpensive commercially made lens cone slips over a flashlight, and will project a large reasonably sharp image from a 35 mm. slide. The device is most useful for small groups in total darkness.

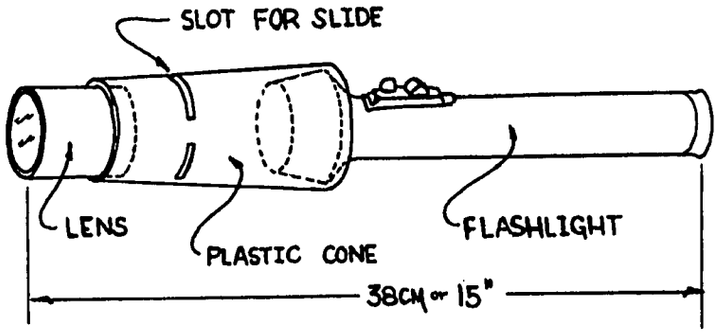

TOOLS AND MATERIALS

Lens and plastic cone
Flashlight - Ray-o-vac Sportsman model S32F recommended; Ray-o-vac Company, Madison 10, Wisconsin. Retail cost for lens, plastic cone and flashlight is $6.95.
Bulb for flashlight - PR3; get 2 extra for modification.
Pliers

DETAILS

The upper sketch shows the three major parts, the flashlight, plastic cone, and lens. The flashlight recommended fits nicely into the cone. Forcing the cone on the flashlight will cause the cone to split, since it is made of thermoplastic material and only about 1 mm. thick. Winding the end of the cone with a few turns of thin wire and glueing with airplane cement will repair and reinforce this weak point. The three element plastic lens slides in the cone for focusing. The lens has about a 5 cm focal length, which means it projects a large picture even with the projector quite close to the screen. If you find this objectionable, remove the middle element of the lens shown in the lower sketch. Since the acrylic plastic lens elements are very soft compared to glass, protect them from being scratched by carrying the lens and cone in a clean plastic or cloth bag. Wipe the plastic lens elements very gently with a slightly damp tissue or soft cloth to clean. Both the lens and cone melt easily, so keep them away from heat.

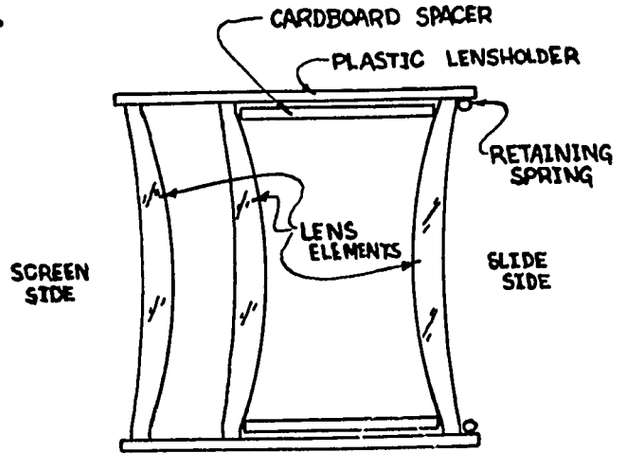

LENS
1:1 CROSS-SECTION

A dark spot in the center of the image can be cured by modifying the flashlight bulb. To see what causes the dark spot, remove the lens and put a square piece of paper in the slide slot; see the dark spot by looking in the front of the cone with the light on. By bending down the flange on the flashlight bulb you can defocus the flashlight enough to eliminate the dark spot. See the sketch. Keep adjusting the bulb till the paper in the slide slot is uniformly illuminated. Bending the bulb flange too much will cause a bright spot in the center of the image.

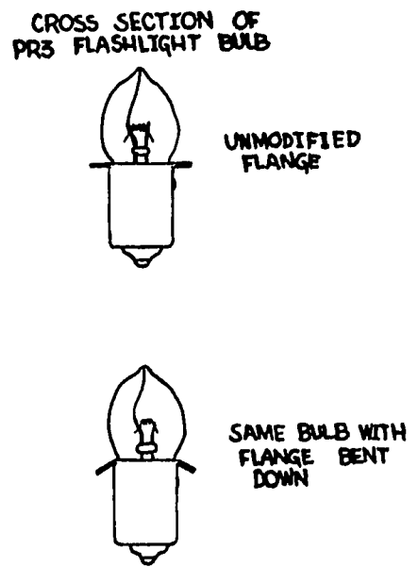

EVALUATION

Several hundred of these inexpensive units are in use by Maryknoll Fathers throughout the world. In many cases the cones are inexpensive enough to provide for locally trained people as a teaching aid. A filmstrip adaptor is described on the next sheet.

Material From - Rev. Eugene F. Higgins, M.M.

FILMSTRIP ADAPTOR FOR THE FLASHLIGHT SLIDE PROJECTOR

ABSTRACT

This filmstrip adaptor is easy to construct and will give quite adequate projection of your film strips. The device is simple, rugged, packs easily and forms a tripod support for the projector.

TOOLS AND MATERIALS

2 pieces aluminum or bamboo - 3 mm x 2 cm x 23 cm.
2 pieces wood - 2 cm x 2 1/2 cm x 7 1/2 cm.
4 brass woodscrews 2 1/2 cm # 6 R.H.
4 machine screws and nuts 1 cm # 8-32 R.H.
2 used spools from 120X film
Hacksaw
Woodsaw
Small metal file
Wood file
Screwdriver
Drill and bits
Sandpaper

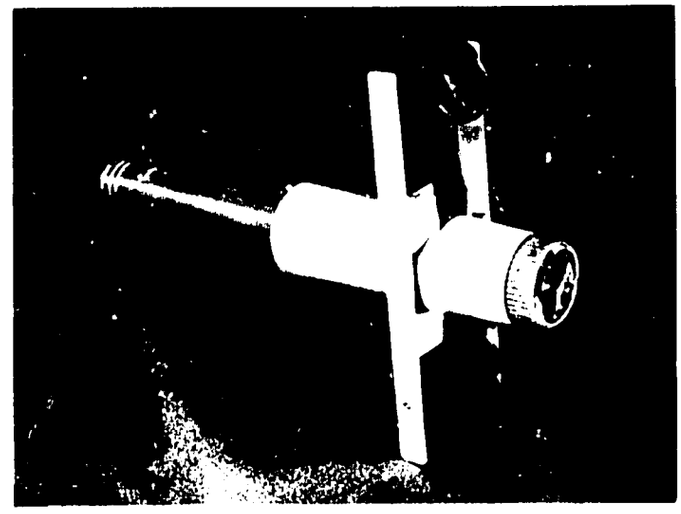

FIG. 1
FILMSTRIP ADAPTOR
ON FLASHLIGHT SLIDE PROJECTOR

DETAILS

The adaptor consists of two parts; the film track and the frame. The frame slides over the plastic cone with a friction fit, and the film track fits through a slot cut in the cone as shown in Figure 1.

First make the frame. It is made up of two parallel strips of metal or wood joined by two wooden cross pieces. The cross pieces have v-shaped cuts to fit over the lens cone. The parallel strips should be flexible enough to allow removal of the rolls placed at the ends of the frame. The rolls are held in place by small bolts or dowels mounted near the ends of the frame. The bottom roll should be mounted away from the ends of the parallel strips to they can act as tripod legs for the projector. Rolls can be made of discarded 120X film spools, or if these are not available, from wood or bamboo. The slots in the 120X film spools are rather wide for clamping the filmstrip. Taping a plastic strip (celluloid) on the spool or bamboo roll provides a place to tuck the filmstrip. The spacing of the wooden cross pieces should be made small at first and enlarged to the proper spacing with the following method. Mark

the location of the slot on the plastic cone, about 6 to 9 mm (1/4 to 3/8") from the existing slide slot on the side toward the flashlight. Do not cut the slot yet. After the wooden cross pieces are screwed tightly to the parallel strips, wrap sandpaper around the plastic cone and use it to shape the cross pieces. Remove the sandpaper and test the frame periodically until, when fitted snugly on the cone, the frame goes barely beyond the mark for the slot. Figures 2 and 3 show the frame.

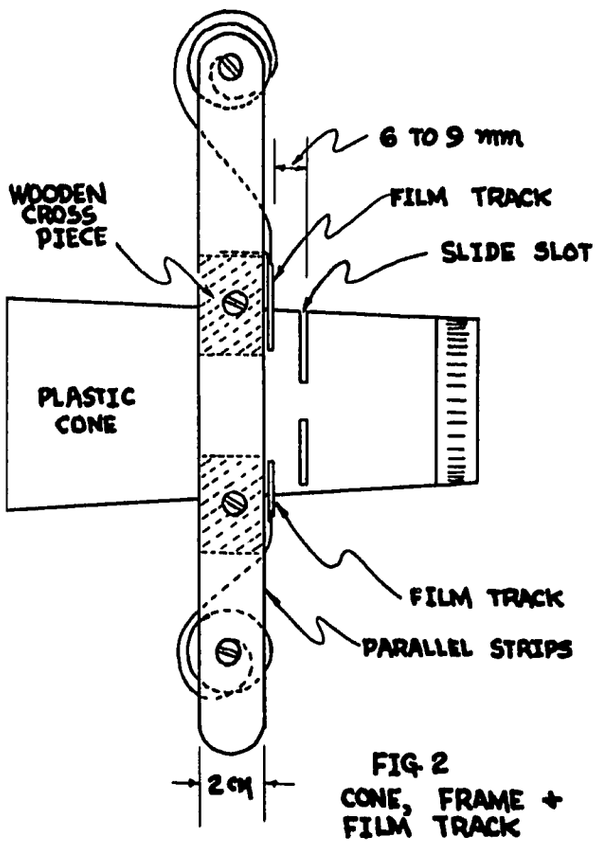

FIG. 2
CONE, FRAME + FILM TRACK

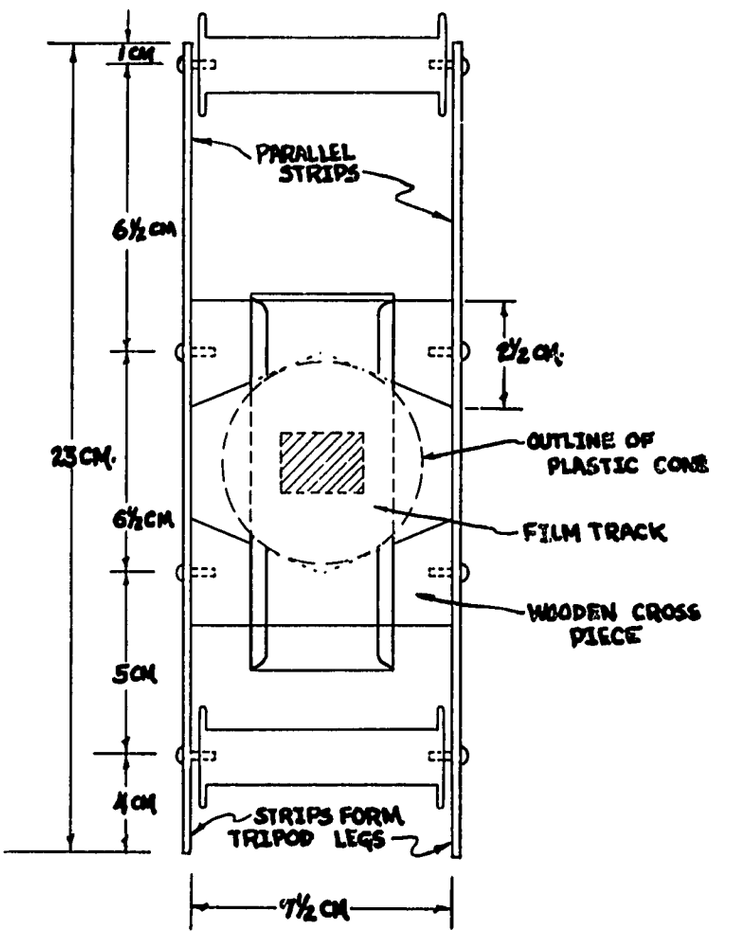

FIG. 3
FRAME + FILM TRACK

Next make the film track as shown in Figure 4. Thin aluminum is the best material, but galvanized iron or heavy tin can metal will work. Use a strip of metal 35 mm wide as a template to fold the film track against. This simplifies bending since it preserves the slot for the filmstrip to run in. After the film track is formed, cut the slot in the plastic cone. Make the slot fit your film track nicely so that when the frame and track are in place the unit is solid. If the frame does not fit the cone snugly and the track does not fit the slot nicely, the projector will be rickety and hard to use. Insert the adaptor in

the cone with the frame in place and mark the proper location for the window. Drill a small hole and use a fine saw blade to cut the window, or drill several holes and then file the window to shape. After cutting the window carefully remove all burrs and rough spots from the film track to prevent scratching the filmstrip. Try a filmstrip to be sure it threads easily, does not bind and holds the film reasonably flat.

EVALUATION

Several varieties of these filmstrip adaptors are being used by Maryknoll Fathers and World Neighbors in the field. More experience is needed before this useful device is fully evaluated.

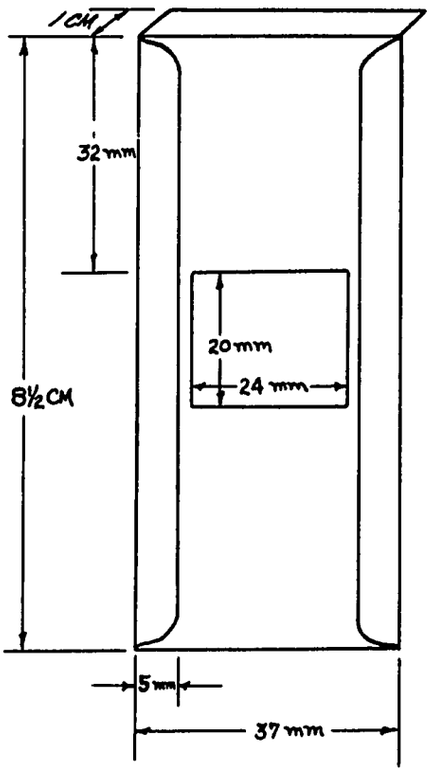

FIG. 4
FILM TRACK

Material From - Rev. Eugene F. Higgins and VITA

GELATIN DUPLICATOR

Abstract

It is possible to print small quantities of simple materials from Ditto or Hectograph masters when a duplicating machine is not available.

Tools and Materials

1 Pint of glycerine (commercial quality is satisfactory)
4 envelopes (4 tablespoons) unflavored gelatin
3 tablespoons sugar
Pan-approximately 10"x13" with ½" rim
Hectograph (or similar) stencil, carbon, pencil or ink

Details

Dissolve gelatin in one cup cold water. Mix with glycerine and sugar. Bring to a boil and cook and stir seven minutes. Pour in the pan and bake approximately 20 minutes at 300 degrees fahrenheit. Let cool, undistrubed, on a level surface for 24 hours before using.

Prepare the original copy according to the directions of the manufacturer of the materials. If a two-layered paper is used, remember to type on the purple side so that the original copy, before transfer to the gelatin, is the same as the desired finished product.

Wet the gelatin surface with a sponge, using lukewarm water in cold weather, and cool water in warm weather. Do not use hot or cold water. Remove moisture by blotting with sheets of newspaper.

Apply original copy, face down, on gelatin surface. To do this properly, apply one end of original first and smooth the complete copy into place. Rub lightly so that it forms contact at all points. Allow to remain in contact about ½ minute. While original is transferring, lift up one end and lay a blank strip of paper across margin. This will facilitate removal of copies without injury to the composition surface which must always be smooth.

Copies are obtained by applying blank sheets of smooth paper (not absorbant paper, such as construction paper or news print) to the composition surface. Copy paper should be rubbed lightly to form perfect contact. Remove copies by pulling paper upward and away from you. Speed is essential to secure maximum number of brilliant copies.

When required number of copies has been made, sponge the surface immediately, using plenty of lukewarm water, until the copy has been erased from the surface. Do not use hot or cold water. Blot with newspaper.

Evaluation

This is an effective method of printing as many as 50 sharp copies and up to 100 copies which are readable.

Material from VITA Participant Mrs. Benjamin P. (Margaret) Coe

PAPER STENCIL METHOD

ABSTRACT

One method for preparing a stencil for use with the Silk Screen method of printing.

TOOLS AND MATERIALS

Stencil Paper

Commercial stencil paper may be used, but as it is quite thick the printed edge may become fuzzy. A thick paper leaves a thick layer of paint after the squeegee has drawn the paint over the silk.

A white bond paper that is somewhat transparent works well.

To reproduce typing use a mimeograph stencil.

Stencil knife

A small bladed knife with handle the diameter of a pencil is most convenient.

DETAILS

Place paper over the original and fasten to a hard level surface. The base of your screen will do.

Trace out the design. With your knife cut around the areas of the first color separation. Apply just enough pressure to cut through the paper without cutting into the original. Leave all parts of the stencil intact; do not strip the areas yet.

Place a pad of newspaper on the silk screen base so that when the screen is lowered on it the silk is firm.

Place the cut stencil on the base in the position desired. Slip several pieces of tape, sticky side up, under the edge of the stencil so that when the screen is lowered on to it the stencil will be taped to the silk. Mask out the open areas of the silk, beyond the edges of the stencil.

Adhere the stencil by drawing the paint across the silk with the squeegee.

NOW--strip the stencil, or remove those areas that you wish to print.

Prepare a mimeograph stencil as you would for a mimeograph machine. Adhere as above.

EVALUATION

By using this procedure, it is possible to retain centers which

makes it more versatile than ordinary stencil technique. However, the method has the following limitations: The life of the stencil is limited to a few hundred at the most; the paper stencil does not hold up with water base paints; one is limited to bold and simple design; and, there is no way to store a paper stencil.

At the end of the run the paper stencil and masking are peeled off and clean up is a simple matter.

Material From - (Mrs.) Margaret Coe
VITA Participant

SILK SCREEN PAINT

Abstract

Recipes for paints for use with silk screen printing.

Materials

Starch or cornstarch
Soap flakes
Gelatin-Optional
Coloring matter (food color, tempera powder, ink or a dye of some sort that is water soluble)

Details

Recipe #1

½ cup Linit starch (not instant)
1½ cup boiling water
½ cup soap flakes

Mix starch with enough cold water to make a smooth paste. Add boiling water and cool until glossy. Stir in soap flakes while mixture is warm. When cool, add coloring.

Recipe #2

¼ cup cornstarch
2 cups water
1/8 cup soapflakes

Bring water to a boil. Mix cornstarch with a small amount of cold water and stir the two together. Bring to a boil and stir until thickened. Add soapflakes while warm. Color.

Recipe #3

Dissolve ½ cup cornstarch in
3/4 cup cold water
Dissolve 1 envelope gelatin (1 tablespoon, unflavored) in
¼ cup cold water

Heat 2 cups of water, pour in cornstarch. Add dissolved gelatin. Boil, and stir until thickened. Cool and add ½ cup soapflakes. Color.

Evaluation

Paints that were colored with powdered tempera are more brilliant than those colored with food colors or ink. Presumably many types of water soluble dyes could be used.

Recipe #2 seems quite lumpy but this does not affect the printing quality.

When stored in jars with tight-fitting lids, these paints should have a shelf life of several months.

One or two teaspoons of glycerine added to any of the above recipes would make the paint somewhat easier to use. This is not necessary.

Never let dried particles of paint fall on the screen or get mixed into the paint as they may puncture silk during printing. (A small hole in silk may be repaired with a small drop of shellac.)

Evaluation

These receipes have been tried and found effective in a temperate climate.

Material from VITA Participant Mrs. Benjamin P. (Margaret) Cox