PN-AAE 923

AGENCY FOR INTERNATIONAL DEVELOPMENT
WASHINGTON, D. C. 20523
BIBLIOGRAPHIC INPUT SHEET

FOR AID USE ONLY
Batch 70

1. SUBJECT CLASSIFICATION
A. PRIMARY: Science and technology — TC00-0000-0000
B. SECONDARY: Applications

2. TITLE AND SUBTITLE
Village technology handbook: agriculture, food processing and preservation, housing and construction

3. AUTHOR(S)
(101) Volunteers for Int.Technical Assistance,Inc.,Mt.Rainier,Md.

4. DOCUMENT DATE: 1964
5. NUMBER OF PAGES: 89p.
6. ARC NUMBER: ARC 631.9.A265 1964

7. REFERENCE ORGANIZATION NAME AND ADDRESS
AID/TA/OST

8. SUPPLEMENTARY NOTES (Sponsoring Organization, Publishers, Availability)
(In English and French. French,107p.: PN-AAE-924)

9. ABSTRACT

10. CONTROL NUMBER
PN-AAE-923

11. PRICE OF DOCUMENT

12. DESCRIPTORS
Agricultural machinery
Construction equipment
Equipment
Food processing
Intermediate technology
Small machines

13. PROJECT NUMBER

14. CONTRACT NUMBER
AID/TA/OST

15. TYPE OF DOCUMENT

AID 590-1 (4-74)

PN-AAE-923
AID/TA/OST

A VILLAGE TECHNOLOGY HANDBOOK

AGRICULTURE
FOOD PROCESSING AND PRESERVATION
HOUSING AND CONSTRUCTION

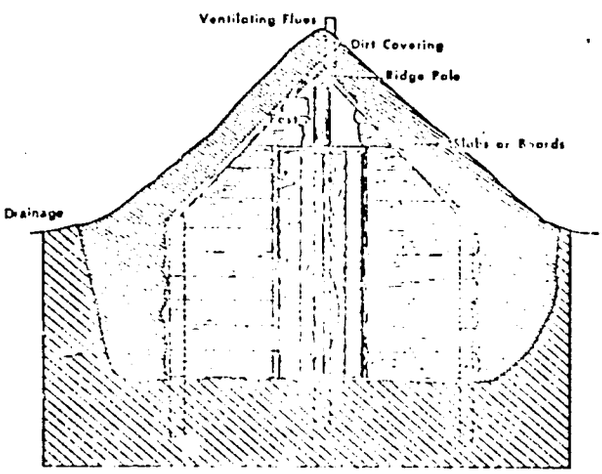

Outdoor Storage Cellar

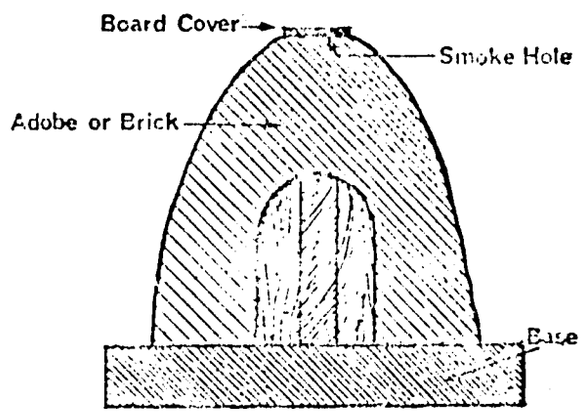

Outdoor Oven

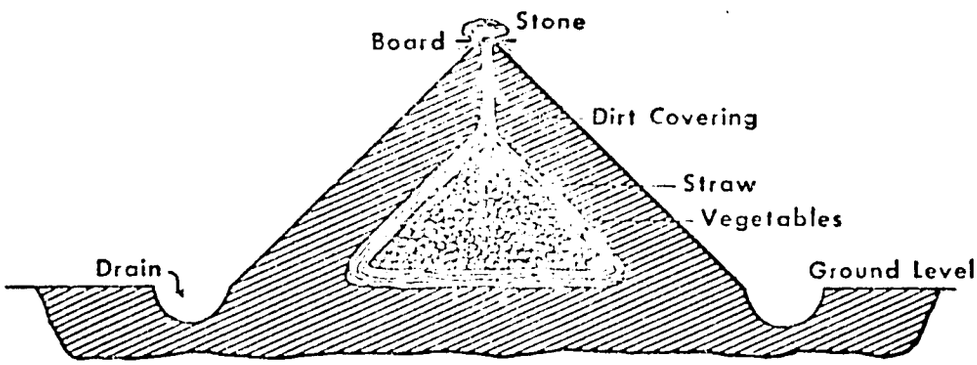

Outdoor Storage Pits

DEPARTMENT OF STATE · AGENCY FOR INTERNATIONAL DEVELOPMENT
COMMODITY ASSISTANCE DIVISION
Washington, D. C. 20523
1964

TABLE OF CONTENTS

PAGE

INTRODUCTION

3 Foreword
4 How To Use This Handbook

WATER SUPPLY

5 Spring Development
8 Cisterns
11 Cistern Catchment
14 Cistern Filter
16 Sand Filter
19 Water Purification Plant
22 Reconstruction Of Dug Wells
26 Deep Dug Well
30 Driven Well
34 A Sanitary Rope And Bucket Well
36 Determination Of Water Flow With Known Pipe Size And Reservoir Height And Location
38 Estimating Small Stream Water Flow
41 Selecting A Dam Site
44 Water Lift
46 Chain Pump For Irrigation
50 Estimating Paddle Wheel Power
53 Reciprocating Wire Power Transmission
56 Map Making Using A Plane Table

HEALTH AND SANITATION

59 Introduction To Sanitary Latrines
61 Privy Location
63 Privy Shelters
65 Pit Privy
69 Water Privy
73 Philippine Water Seal Latrine

AGRICULTURE

81 Tile For Garden Irrigation And Drainage
84 Concrete Tile Machine
94 Making Concrete Tile
96 Siphon Tube
98 Spring Winder
100 Fresno Scraper
106 Buck Scraper
109 Float With Adjustable Blade
112 V-Drag

FOOD PROCESSING AND PRESERVATION

115 Multiple Hitches
118 Dessiccant Drying For Grain, Etc.
121 Winter Storage of Vegetables

'PAGE

123 Outdoor Storage Pits
126 Outdoor Storage Cellar
127 Corn Silage

HOUSING AND CONSTRUCTION

131 Splitting Bamboo
133 Bamboo Joints
136 Bamboo Preservation
138 Bamboo Board
141 Bamboo Walls, Partitions and Ceilings
143 Pole Frame Construction For Farm And Utility Buildings
150 Prefabricated Panels In Pole Building
157 Casein Glue
160 Preparation Of Fish Glue

HOME IMPROVEMENT

163 Cooking Stove
167 Outdoor Oven
169 Home Soap Making
174 A Nest Of Low-Cost Beds
176 A Locally-Made Mattress
178 Potter's Wheel Sewing Machine Drive
184 Small Rectangular Kiln
193 Salt Glaze For Pottery

COMMUNICATIONS

195 Inexpensive Rubber Cement
197 Flashlight Slide Projector
199 Filmstrip Adaptor For The Flashlight Slide Projector
202 Gelatin Duplicator
204 Paper Stencil Method
206 Silk Screen Paint

TABLES

209 Temperature Conversion
210 Length Conversion
212 Weight Conversion

FOREWORD

It is in a world of villages that most of the people live. Surrounding these villages are the farmlands that feed the nations and support their economic development. Thus, any improvement in the villages is of benefit to all.

This second edition of the Village-Technology Handbook aims at helping to generate village-improvement in many nations through listing additional ideas, methods and materials that have proven useful in villages throughout the world.

Widespread usage of the first Village Technology Handbook, issued in August, 1963, and comments from field technicians and others who have used it, have shown the need for this interchange of ideas. In essence, these handbooks are a clearing house through which technicians can tell each other of low-cost, locally-developed means of village improvement that they have experienced or observed.

Those who read and use these handbooks should see that this knowledge reaches down into the village and results in village action. At the same time, they should inform this office of those useful ideas and methods that they believe will have value in other nations.

Additional copies of this handbook can be obtained from the United States Agency for International Development in foreign countries or from the Communications Resources Division, Agency for International Development, Washington, D. C. 20523, U. S. A.

ooo

The Agency for International Development is indebted to Volunteers for International Technical Assistance, Inc. for a major part of the content of this publication. Compilation, testing and development of the material was completed by VITA under contract with the Office of Technical Services, Department of Commerce.

HOW TO USE THIS HANDBOOK

The major purpose of this handbook is to describe low-cost activities that can be locally developed by villagers. However, there are activities that...

- can be developed only with guidance of trained technicians or other trained individuals
- need equipment that must be used on a multi-village basis, because of cost factors
- require materials that can be best produced at a central facility and distributed to the villages

It is recommended that these activities be considered for program activity by government extension agencies, cooperatives, and other organizations capable of developing activities on a multi-village basis.

In some cases, village leaders and personnel of cooperatives can be trained in the techniques and provided with the necessary equipment. Operations teams can also be organized and trained to demonstrate techniques or guide the villagers in development of the project.

Other articles can be studied for local adaptation, translation and distribution directly to the villages, extension agents, cooperatives, etc.

It is also recommended that you obtain a copy of the first Village Technology Handbook, if you do not already have one. This contains basic information on the use of concrete and many village-improvement activities.

The conversion tables shown at the end of this handbook are for your convenience. They will help you to quickly convert any size or quantity to the system used in your country.

Conversions have been made for you in some of the following articles. These conversions are only guides and must be adapted to locally available materials. When this is done,be sure to make necessary changes in related sizes. (Ex: Holes must be changed according size of local bolts.)

TEMPERATURE CONVERSION

ABSTRACT

This chart is useful for quick conversion from Centigrade to Fahrenheit and vice versa. The equations provide slower but more accurate results.

TOOLS AND MATERIALS (None)

DETAILS

Although the chart is fast and handy, you must use the equations below to calculate the exact conversion if your answer must be accurate to within one degree:

Degrees Centigrade = 5/9 x (Degrees Fahrenheit -32)

Degrees Fahrenheit = 1.8 x (Degrees Centigrade +32)

This example may help to clarify the use of the equations; 72 F equals how many degrees Centigrade?

$$72^{o}F = 5/9\ (^{o}F - 32)$$

$$72^{o}F = 5/9\ (72 - 32)$$

$$72^{o}F = 5/9\ (40)$$

$$72^{o}F = 22.2\ ^{o}C$$

Notice that the chart reads 22 ^{o}C, an error of about 0.2 ^{o}C.

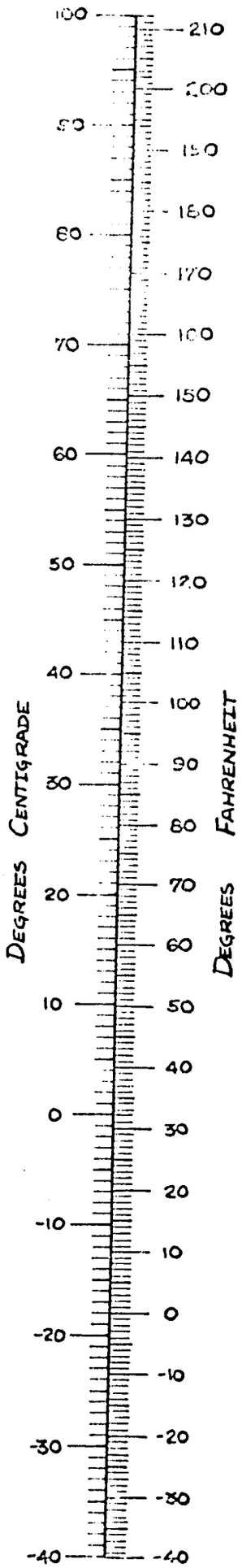

LENGTH CONVERSION

ABSTRACT

This foldout chart is useful for quick conversion from meters and centimeters to feet and inches or vice-versa. For distances greater than three meters, or more accurate results, the tables or conversions equations must be used.

TOOLS AND MATERIALS (None)

DETAILS

The chart (page 4) has metric divisionf of one centimeter to three meters, and English graduations in inches and feet to ten feet. It is accurate to about plus or minus one centimeter. Folding out the chart makes a handy reference when studying other drawings in the Handbook.

For more accurate results these tables are useful:

INCHES INTO CENTIMETERS
(1 in. = 2.539977 cm.)

inches	0	1	2	3	4	5	6	7	8	9
0	cm.	2.54	5.08	7.62	10.16	12.70	15.24	17.78	20.32	22.86
10	25.40	27.94	30.48	33.02	35.56	38.10	40.64	43.18	45.72	48.26
20	50.80	53.34	55.88	58.42	60.96	63.50	66.04	68.58	71.12	73.66
30	76.20	78.74	81.28	83.82	86.36	88.90	91.44	93.98	96.52	99.06
40	101.60	104.14	106.68	109.22	111.76	114.30	116.84	119.38	121.92	124.46
50	127.00	129.54	132.08	134.62	137.16	139.70	142.24	144.78	147.32	149.86
60	152.40	154.94	157.48	160.02	162.56	165.10	167.64	170.18	172.72	175.26
70	177.80	180.34	182.88	185.42	187.96	190.50	193.04	195.58	198.12	200.66
80	203.20	205.74	208.28	210.82	213.36	215.90	218.44	220.98	223.52	226.06
90	228.60	231.14	233.68	236.22	238.76	241.30	243.84	246.38	248.92	251.46

CENTIMETERS INTO INCHES
(1 cm. = 0.3937 in.)

cm.	0	1	2	3	4	5	6	7	8	9
0	inches	0.394	0.787	1.181	1.575	1.969	2.362	2.756	3.150	3.543
10	3.937	4.331	4.724	5.118	5.512	5.906	6.299	6.693	7.087	7.480
20	7.874	8.268	8.661	9.055	9.449	9.843	10.236	10.630	11.024	11.417
30	11.811	12.205	12.598	12.992	13.386	13.780	14.173	14.567	14.961	15.354
40	15.748	16.142	16.535	16.929	17.323	17.717	18.110	18.504	18.898	19.291
50	19.685	20.079	20.472	20.866	21.260	21.654	22.047	22.441	22.835	23.228
60	23.622	24.016	24.409	24.803	25.197	25.591	25.984	26.378	26.772	27.165
70	27.559	27.953	28.346	28.740	29.134	29.528	29.921	30.315	30.709	31.102
80	31.496	31.890	32.283	32.677	33.071	33.465	33.858	34.252	34.646	35.039
90	35.433	35.827	36.220	36.614	37.008	37.402	37.795	38.189	38.583	38.976

An example may help explain how to use this type of table. Suppose you wish to find how many inches are equal to 66 cm. On the cm. to in. table look down the leftmost column to 60 cm., and then right to the column headed 6 cm. This gives the result, 25.984 inches.

EQUATIONS

1 inch = 2.54 cm.
1 foot = 30.48 cm.
= 0.3048m.
1 yard = 91.44 cm.
= 0.9144m.
1 mile = 1.6. km.

1 cm. = 0.3937 in.
1 m. = 39.37 in.
= 3.28 ft.
1 km. = 0.62137 mile

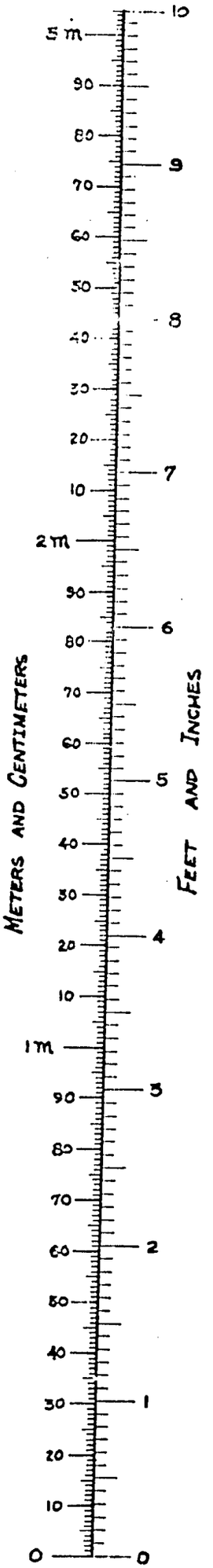

WEIGHT CONVERSION

ABSTRACT

The chart converts pounds and ounces to kilograms and grams of vice versa. For weights greater than ten pounds, or more accurate results, the tables or conversion equations must be used.

TOOLS AND MATERIALS (None)

DETAILS

Notice that there are sixteen divisions for each pound on the chart to represent ounces. There are only 100 divisions in the first kilogram, and each division represents ten grams. The chart is accurate to about plus or minus twenty grams.

KILOGRAMS INTO POUNDS
(1 kg. = 2.20463 lb.)

kg.	0	1	2	3	4	5	6	7	8	9
0	lb.	2.20	4.41	6.61	8.82	11.02	13.23	15.43	17.64	19.84
10	22.05	24.25	26.46	28.66	30.86	33.07	35.27	37.48	39.68	41.89
20	44.09	46.30	48.50	50.71	52.91	55.12	57.32	59.53	61.73	63.93
30	66.14	68.34	70.55	72.75	74.96	77.16	79.37	81.57	83.78	85.98
40	88.19	90.39	92.59	94.80	97.00	99.21	101.41	103.62	105.82	108.03
50	110.23	112.44	114.64	116.85	119.05	121.25	123.46	125.66	127.87	130.07
60	132.28	134.48	136.69	138.89	141.10	143.30	145.51	147.71	149.91	152.12
70	154.32	156.53	158.73	160.94	163.14	165.35	167.55	169.76	171.96	174.17
80	176.37	178.58	180.78	182.98	185.19	187.39	189.60	191.80	194.01	196.21
90	198.42	200.62	202.83	205.03	207.24	209.44	211.64	213.85	216.05	218.26

POUNDS INTO KILOGRAMS
(1 lb. = 0.45359 kg.)

lb.	0	1	2	3	4	5	6	7	8	9
0	kg.	0.454	0.907	1.361	1.814	2.268	2.722	3.175	3.629	4.082
10	4.536	4.990	5.443	5.897	6.350	6.804	7.257	7.711	8.165	8.618
20	9.072	9.525	9.979	10.433	10.886	11.340	11.793	12.247	12.701	13.154
30	13.608	14.061	14.515	14.969	15.422	15.876	16.329	16.783	17.237	17.690
40	18.144	18.597	19.051	19.504	19.958	20.412	20.865	21.319	21.772	22.226
50	22.680	23.133	23.587	24.040	24.494	24.948	25.401	25.855	26.308	26.762
60	27.216	27.669	28.123	28.576	29.030	29.484	29.937	30.391	30.844	31.298
70	31.751	32.205	32.659	33.112	33.566	34.019	34.473	34.927	35.380	35.834
80	36.287	36.741	37.195	37.648	38.102	38.555	39.009	39.463	39.916	40.370
90	40.823	41.277	41.730	42.184	42.638	43.091	43.545	43.998	44.452	44.906

EQUATIONS

1 oz. = 28.35 g. 1 g. = 0.03527 oz.
1 lb. = 0.4536 kg. 1 kg. = 2.205 lb.

AGRICULTURE

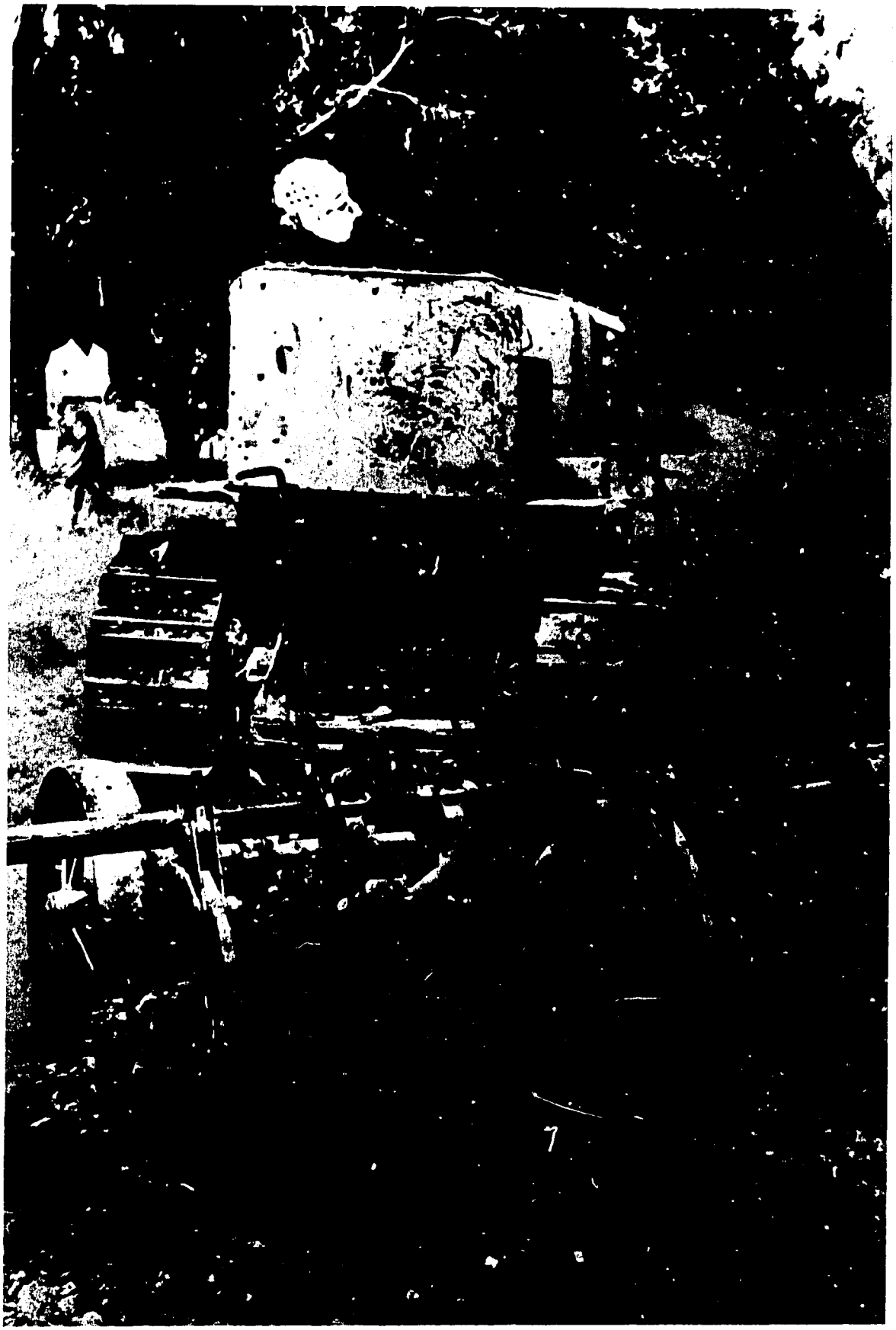

IRAQ

TILE FOR GARDEN IRRIGATION AND DRAINAGE

Abstract

This handmade concrete tile provides irrigating water or drainage, helping to keep your garden in production during all seasons.

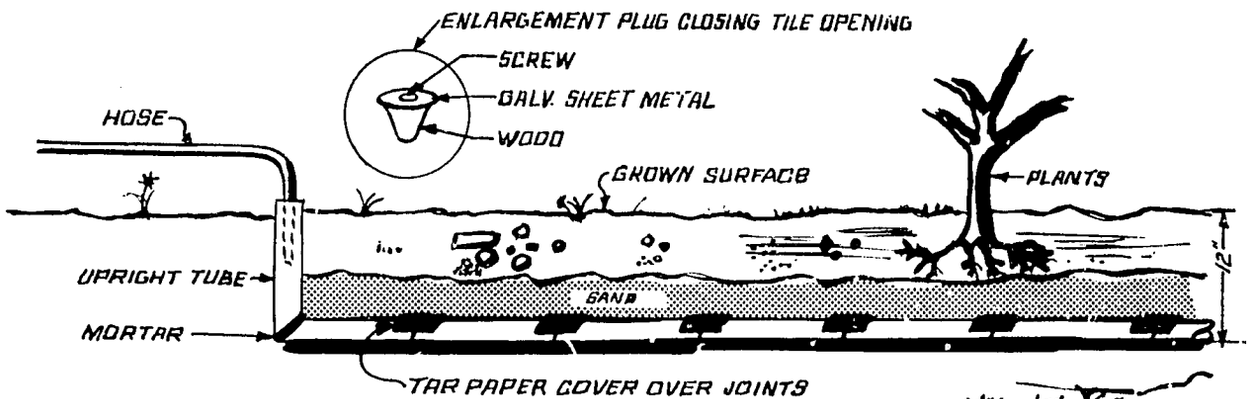

FIG. 1

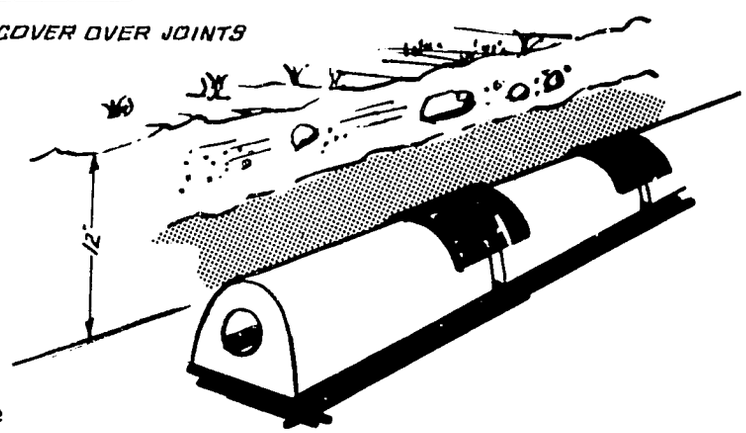

Tools and Materials

Concrete tile
Cement for mortar, concrete
Sand for mortar and tile covering
Gravel or crushed stone for concrete
Wood for plugs
Optional - Brass outlet box collar
Shovels, concrete mixing tools

Details

Concrete tile makes the best use of irrigation water and also disposes of surplus water during the wet season.

Concrete irrigation tiles, whether for irrigation or drainage or both are laid twelve inches deep in lines four feet apart (the latter measurement depending on the texture of the soil, -- more distance between lines for clay soils and less for sandy soils). The garden should be almost level, with good surface drainage. By making "elbows" at the ends of the lines, once can give access to the tile at either end. A garden hose can deliver the water from its source to the upright ends of the tile lines. While tile lines need to be level, they do not have to be straight and can follow a contour line or double back to make a more convenient system of installation, with four or more lines connected to make one unit. (See the illustration on the next page.)

10

In dry seasons, the tiles supply water to the plant roots. See Figure 1. In wet seasons, the water escapes through the sand and gravel around the tile and follows the concrete tube formed by the tiles to a drainage outlet. (See Figure 2) While passing downward through the soil to the tile, the water draws air into the soil and supplies oxygen to the helpful bacteria and to the plant roots. Seedlings cannot grow without oxygen. (Plants do not grow in a flower pot without a drain hole in the bottom, because they do not get oxygen).

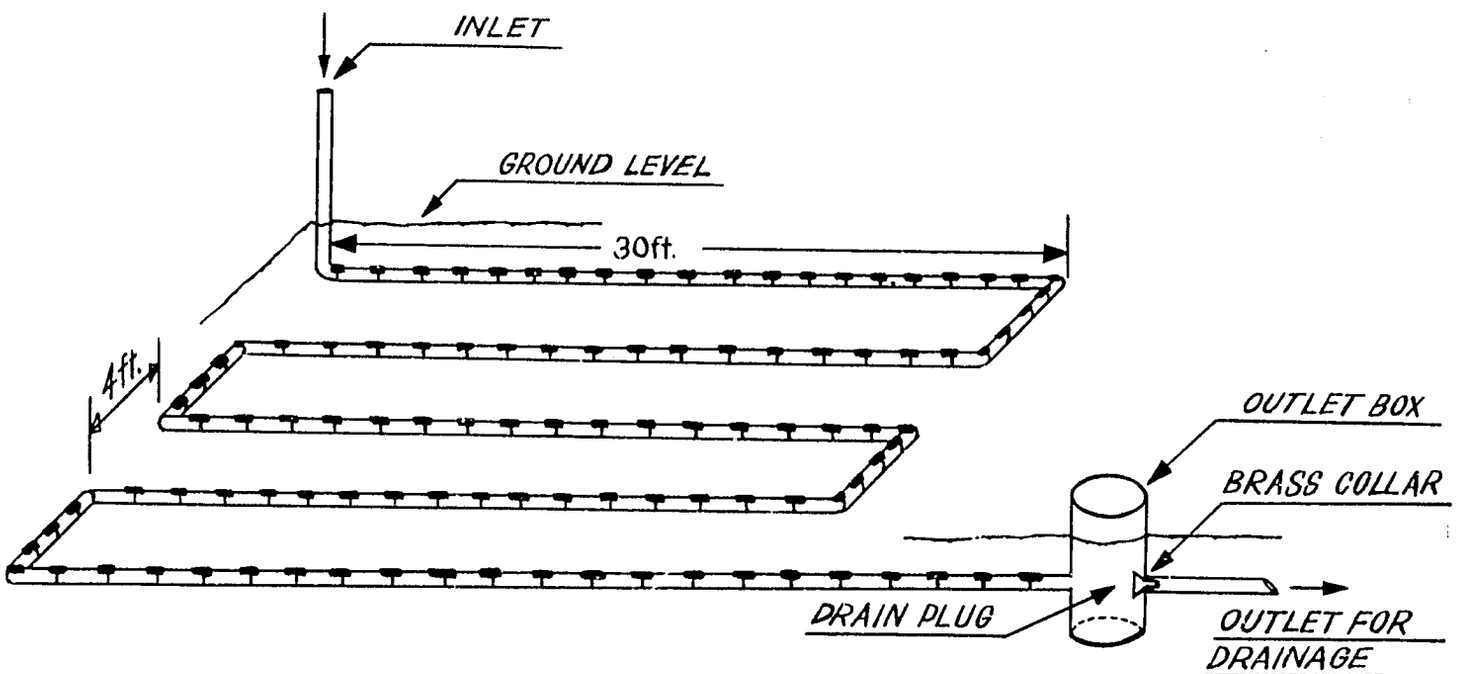

How to install concrete irrigation tile - Grade the garden plot to within two or three inches of level and make trenches twelve inches deep according to the design shown below. This will give an even distribution of the water. Check the bottom of the tile ditches to be sure they are level. Only the drainage outlet will have a drop.

Lay the tile, end to end, in the bottom of the trench. Use an "elbow" (made of two tiles cut to 45-degree angle) to make a place for putting the hose at one end, and use other elbows to turn corners.

Put a piece of tar paper (or used linoleum) over each joint to keep the dirt out of the line. A piece two inches by five inches is large enough. Cut with tin snips.

Cover the tile with sand to give the water an opportunity to soak out into the soil or (in the case of drainage), to seep into the tile. The bottom five inches of the trench are filled with sand or gravel (around the tile) and the top seven inches are filled with soil.

Near the outlet an upright concrete box is made with two holes near the bottom, so the drainage water can run through and on out to an outlet. The box is large enough so one can reach into it to install a plug in the drain side of the box when the system is used for irrigation. A brass or aluminum collar installed in the concrete will make it easier to close this hole completely and thus avoid a loss of water.

Covers should be put over both ends to keep out small animals. (See Figure 1.)

Do not water more frequently than once or twice a week, then the plant roots will never enter the tile line to obstruct it.

Be careful not to injure the tile tillage equipment.

For irrigation the tile system is used with the drain plug, securely closed. (See Figure 2.) Water is run into the line once or twice a week, by means of a hose, until the soil becomes moist. For drainage, simply pull the plug.

This system of under-ground irrigation (and drainage) can serve under fruit trees, gardens, or around the foundations of building where drainage is a problem.

In regions of heavy rainfall, the tile drainage can be combined with good surface drainage by making raised beds in the garden, shoveling out foot-wide pathways which will be six inches lower than the beds. Put the beds over the tile lines and make them three feet wide. Use the pathways also as drainage ways and connect them with a good outlet to lower ground.

Evaluation

Drainage and underground irrigation using these tiles have worked satisfactorily in Panama.

Material from - "A Machine for Making Concrete Tile for Irrigation and Drainage" by J. Oscar Brown, U. S. Department of Commerce, O.T.S. Information Kit, Vol. II #2, November, 1961.

12

CONCRETE TILE MACHINE

ABSTRACT

This all steel machine can be made of scrap metal in any shop with welding equipment and makes a good welding project for students.

TOOLS AND MATERIALS

Itemized under details.

DETAILS

With the machine described below it is possible for one man to make two tiles per minute, although a good day's work would be 300 or more. The mortar remains in the form only a few second. The cement mixture is tampered into the form with a tamper. Then the form is immediately turned up-side-down on a (slightly oiled) concrete floor and emptied, leaving the tile completed and ready to start its curing process.

It is well to point out that all the blueprint drawings of the form and its several parts are made to show the form in its up-side-down, or emptying, position, At the time when the concrete is being tamped into the form, the machine will be the other side up from that shown in the blueprint.

The all-metal tile machine can be made of used or new materials. To make the form, it is desirable to have both electric and acetylene welding equipment, although either will serve. The thicker parts are assembled by arc welding and the thinner parts are bronze welded in place. Some parts have to be put through other parts before welding, as will be explained below. We shall refer to each individual part by its number, which appears on the sketches.

The assemblies made of parts No. 10, 11 and 12 (See sketch G and M) are simply a convenient means of taking hold of the levers to open the end doors. These levers are made of parts No. 5 and 13 as described below and shown on sketches H, I and J and they work against the two springs which hold the doors shut,--the tension being made sufficient to hold the doors closed against the force of tamping.

The hole in the end door is shown as 1/8" larger than the diameter of the pipe which shapes the interior surface of the concrete tubes. This 1/8" is an allowance of clearance necessary to keep the sand particles from making the pipe difficult to remove after the mortar is tamped around it. Greater clearance would hurt the uniformity of the tile. The finished tile should have a uniform half-inch wall and part No. 1 must be shaped and so related to the pipe that the thickness of the tile wall will be correct.

13

Parts No. 7 are bronze welded to the sides of No. 1 (Sketch E). These parts, like other parts which touch the hands, should be dressed to a smoothness sufficient to avoid injury to the operator. The outside of the form should be well painted but the inside cannot be painted, as paint would cause the mortar to stick to the inside. When the form is not in use, the inside should be kept oiled.

The pipe may need to be dressed lightly in the lathe to make it easier to remove from the form after the mortar is tamped around it. In turning, it is advisable to make the end opposite the handle end 1/64" smaller, as this will facilitate its removal in the emptying process. This lathe work should be done after the end of the pipe opposite the handle end has been welded shut with a disc of galvanized sheet metal. If this end is not closed, cement will enter the pipe and thus be spilled into the inside of the tile to become an obstruction there.

Part No. 19 is a wire or 3/32" steel welding rod with the shape shown below, but one of the eyes has to be formed after the part has been threaded through the hole in part No. 8, (See sketches A and M).

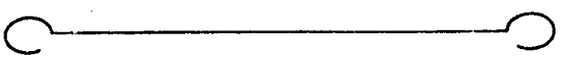

The following paragraphs are listed by part numbers:

1. The inside walls of the form are made of 16-gage galvanized iron. Part No. 1 as shown in sketch B is made from a sheet cut to a true rectangle, 10 1/2" x 12". This is bent to shape by putting a 1/4" fold on each of the twelve-inch sides; bending 3/4" more of same sides to a right angle; and then shaping the sheet according to the curve shown here (at the right). This lining is then fitted into the cradle which is made of parts No. 2 and 3. Parts No. 6 will be the end doors, which are also made of 16 gage sheet iron. The inside of the form should not be painted, as this interferes with its operation.

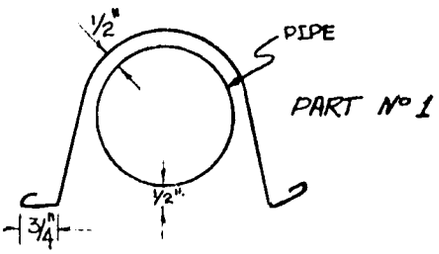

SHAPING PART Nº 1

2. For part No. 2, two pieces of angle iron, 1 1/2" x 1 1/2" x 1/8" x 12" are needed.

3. Angle iron, 1 1/2" x 1 1/2" x 3/16", 3 3/4" long. (Need 2) Parts No. 2 and 3 are welded together to form the cradle. Parts No. 8 are welded in place on parts No. 2 and corrections are made for shape before No. 1 is tack welded into the cradle which has thus been formed. The design above gives some idea of final relationship to be kept between the sheet metal lining of the form and the metal pipe. Notice that the tile wall will be uniformly 1/2" thick. See Sketch A, B, and C.

14

4. Mild steel rods, 3/8" by 6". See sketch L. (Need 2) These are welded in place to make the form stand a little taller so the levers will not touch the work bench while the mortar is being tamped into the form. Also they provide a wider base.

5. Mild steel rods, 3/8" x 9". See sketch I. (Need 4) These are bent to form the levers and are welded into pairs by means of the connecting piece, No. 13. See sketch H. Notice the tiny appendages which are welded to the handle end of the levers. These are to keep the hand hold from turning or sliding endwise from its proper position. By the "hand hold" we mean the assembly made of Parts No. 10 11, and 12.

6. Galvanized sheet metal, 16-gage, 5 1/2" x 6 1/2". (Need 2) These are the doors and the parts which hold the center pipe in its proper position. They should be cut and shaped after Part No. 1 has been tack welded in its place. See sketch D.

7. Galvanized sheet metal, 16-gage, 1 1/2" x 4", bent to angle as shown in sketch E. (Need 2) These are handles for lifting the form. They are dressed smooth and bronze welded to the sides of No. 1 after the doors are properly installed as explained under No. 15 below.

8. Mild steel bar, 3/4" x 1/4" x 2 3/4". (Need 4) See sketch A. They are welded to No. 2 to complete the cradle for the lining of the form. Then the lining, part No. 1 is welded to No. 8 at the fold in the edge of No. 1. Check to see that there remains 1/2" as the space for the thickness of the tile wall.

9. Screen door spring, cut into coils as shown, 5 1/2" long with the end loops bent out to form eyes. (Need 2) See sketch F.

10. Channel iron, 1 1/4" x 3/4" x 3 1/4". (Need 2) Countersink hole for screw head. Dress parts No. 10 and 11 smooth as they are handles.

11. Strap iron, 1" x 1/8" x 3 1/4". (Need 2) See sketches G and M. Drill and thread hole to match the screw hole in part No. 10. Make guide holes for the round appendages which are welded to the end of the levers, No. 5. The appendage on No. 5 is made by sawing off a 3/8" length of 3/8" diameter rod and bronze welding it to the end of the handle as shown.

12. Machine screw, flat head, 1/4" x 3/4". (Need 2) This unites No. 10 and 11.

13. Mild steel rod, 3/8" x 5". (Need 2) See sketch J. Parts No. 5 are made in pairs by welding to the ends of part No. 13. Before welding, insert part 13 in the tube, No. 14, which will become the pivot (after No. 14 is welded to the inside angle of No. 3). Thus we have the levers which open the end doors.

14. Pipe, 3/8", 3" long. (Need 2) They form the pivots for levers.

15. Steel welding rod, 1/4" x 4 1/4", --ends ground flat and smooth. (Need 2) See sketch M. These are the hinge pins for the doors.

After the hinge holes, No. 16 are welded to part No. 3, parts No. 15 are put in place in the holes. Then parts No. 6, the doors, are put in place, checked for exact position and bronze welded to the hinge pins, No. 15. This weld extends almost the entire distance between one pivot hole (part No. 16) and the other. The weld holds the door to the hinge pin and prevents the hinge pin from sliding out of place.

16. Steel bar, 3/4" x 1" x 1/4". See sketch 1. (Need 4) Bore 1/4" hole for the hinge rod as shown. No. 15 pivots in these holes to make hinges for the doors. Parts No. 16 are welded to part No. 3 in such position as to be as far to the outside edge of the door as possible. It is best to make a trail positioning of the door and parts No. 15 and 16 by tack welding No. 16 lightly before welding it permanently. Then it is possible to make sure that the door is going to be in such place that the pipe will have its proper position.

17. Common nails, 6 penny, with strong heads. See sketch M. (Need 4) Connect the nail to the spring by a wire through the hole in No. 8. Put the wire through the holes before forming the second end loop.

18. Piston, two-inch galvanized pipe, 16" long. (The "two-inch" measurement is the inside diameter of the pipe.) Weld one end shut by bronze welding a metal disc to the end. Then dress lightly in the lathe, making the closed end 1/64" smaller than the other. It will serve well without turning, but will be easier to operate it dressed.

19. Wire or welding rod, 3/32" to make the connection between parts No. 9 and 17. See the design on the second page and sketch M.

EVALUATION

With the machine described in this bulletin, concrete tile like the one shown here can be made at the rate of 80 to 100 to a sack of cement. One man can make 300 or more tile in an eight-hour day.

Material From - "A Machine for Making Concrete Tile for Irrigation and Drainage" by J. Oscar Brown, U. S. Department of Commerce, O.T.S. Information Kit, Vol. II #2, November 1961.

16

D.
MAKE
2 DOORS

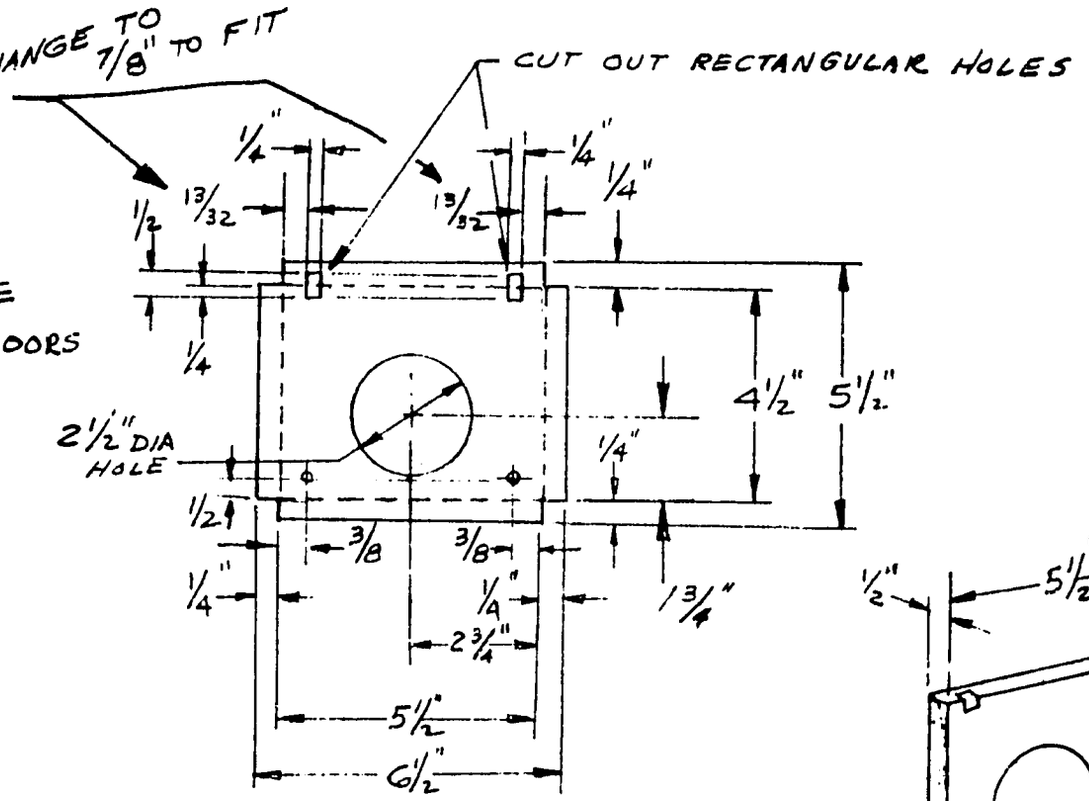

DOOR TEMPLATE

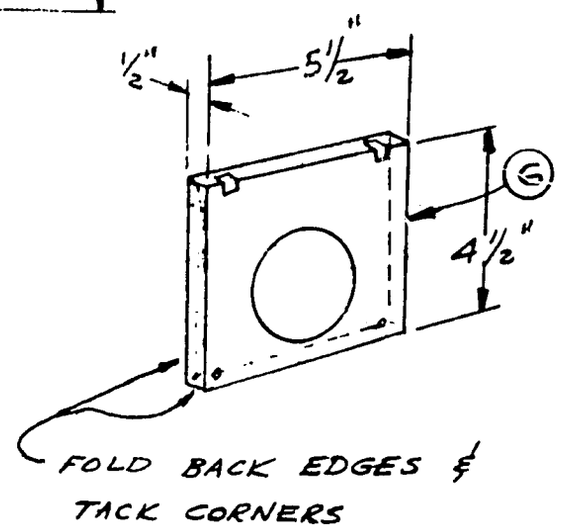

E. BRONZE WELD HANDLES (ONE ON EACH SIDE)

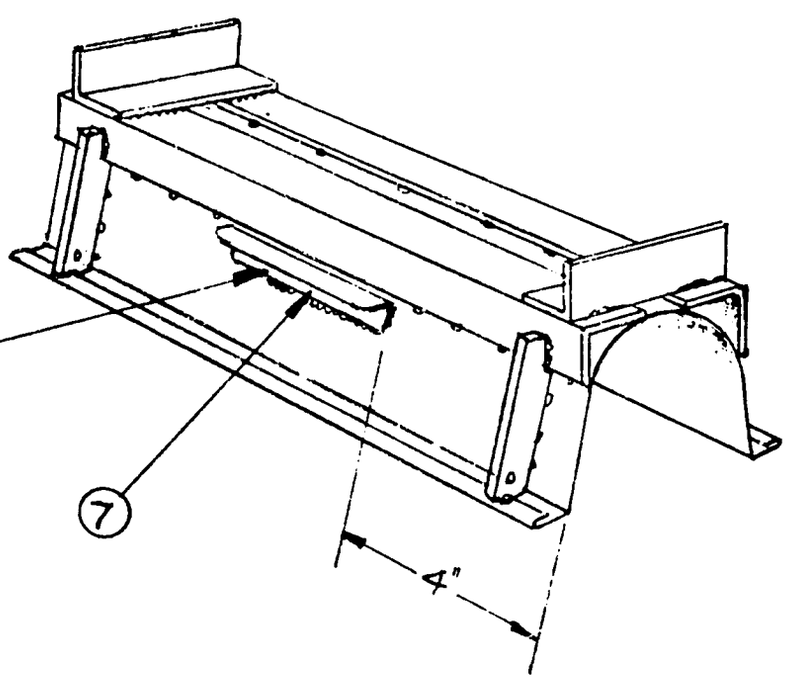

F. MAKE 2 SPRINGS

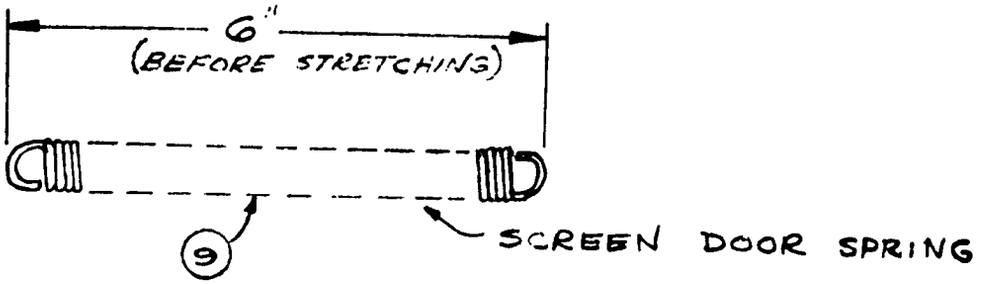

G. MAKE 2 LEVER HANDLES

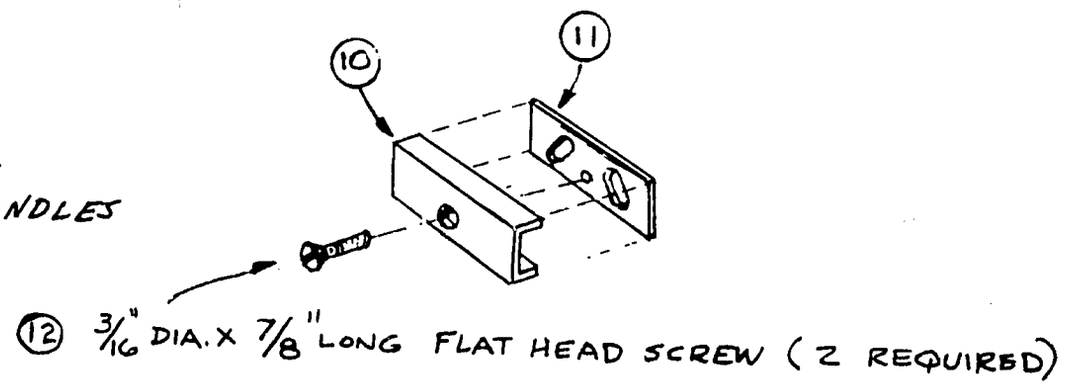

H. MAKE 2 LEVER HINGES

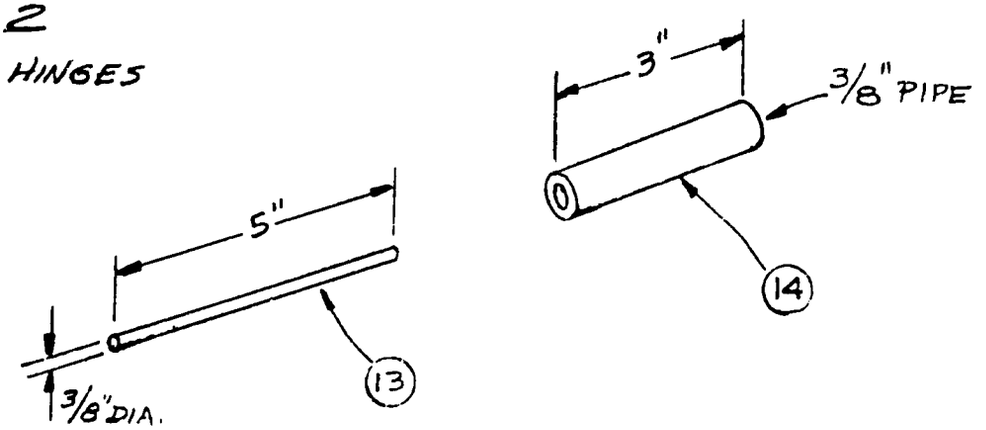

I. MAKE 4 LEVERS (3/8" DIA ROD)

(2 RIGHT HAND, 2 LEFT HAND)

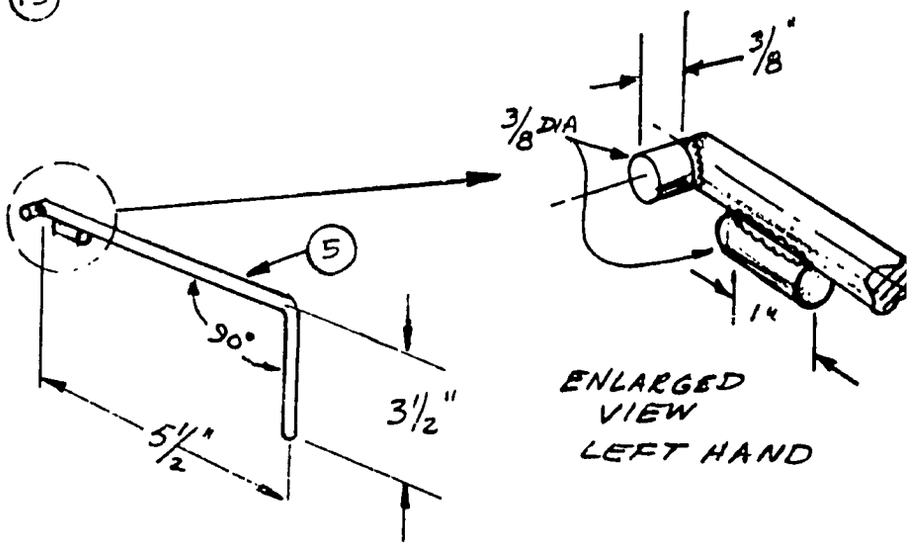

18

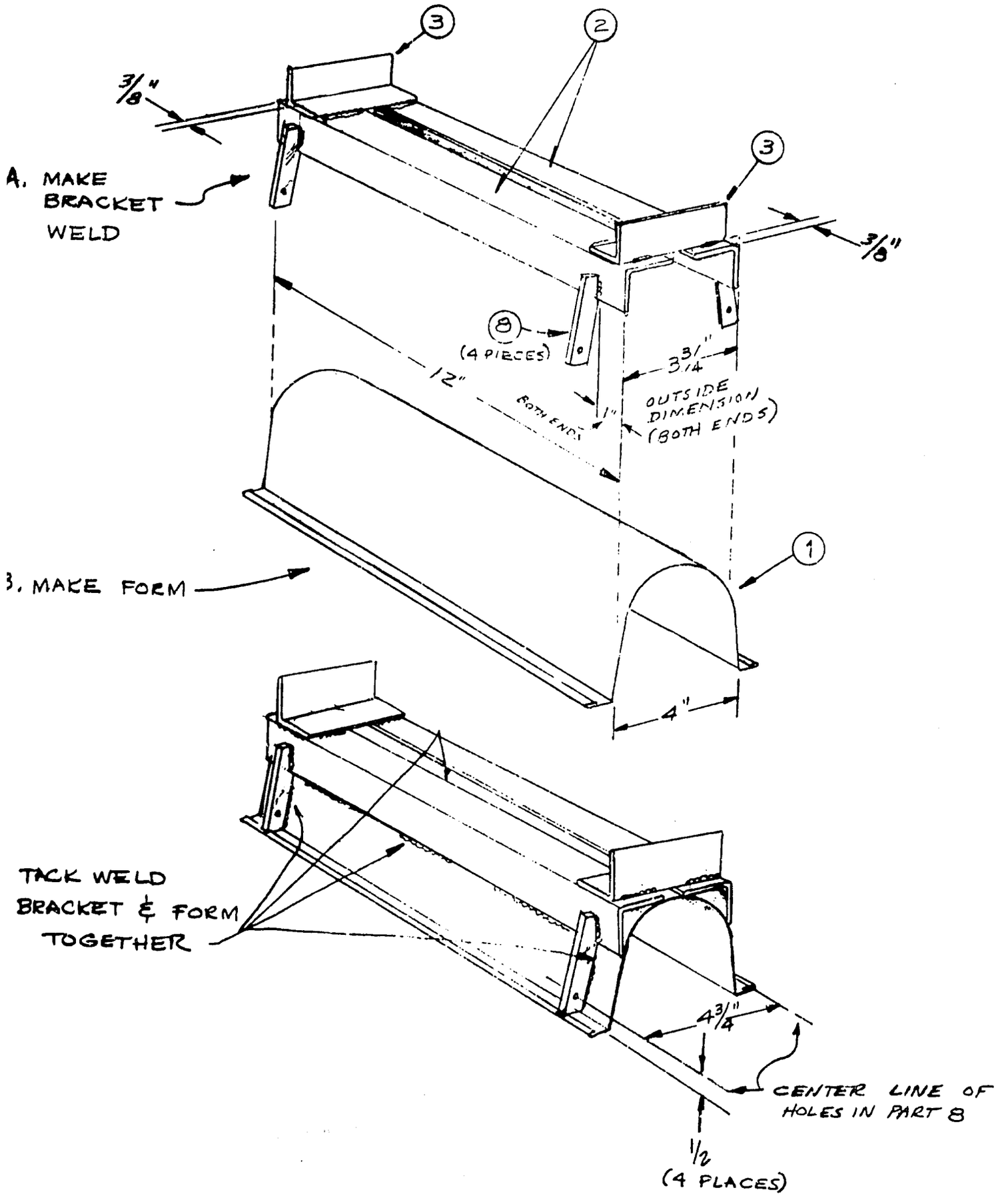
3
2
3/8"
A. MAKE BRACKET WELD
3
3/8"
8
(4 PIECES)
12"
3 3/4"
OUTSIDE DIMENSION (BOTH ENDS)
BOTH ENDS
1"
1
B. MAKE FORM
4"
TACK WELD BRACKET & FORM TOGETHER
4 3/4"
CENTER LINE OF HOLES IN PART 8
1/2
(4 PLACES)

J. ASSEMBLE LEVER 5
& PIVOTS 13 & 14

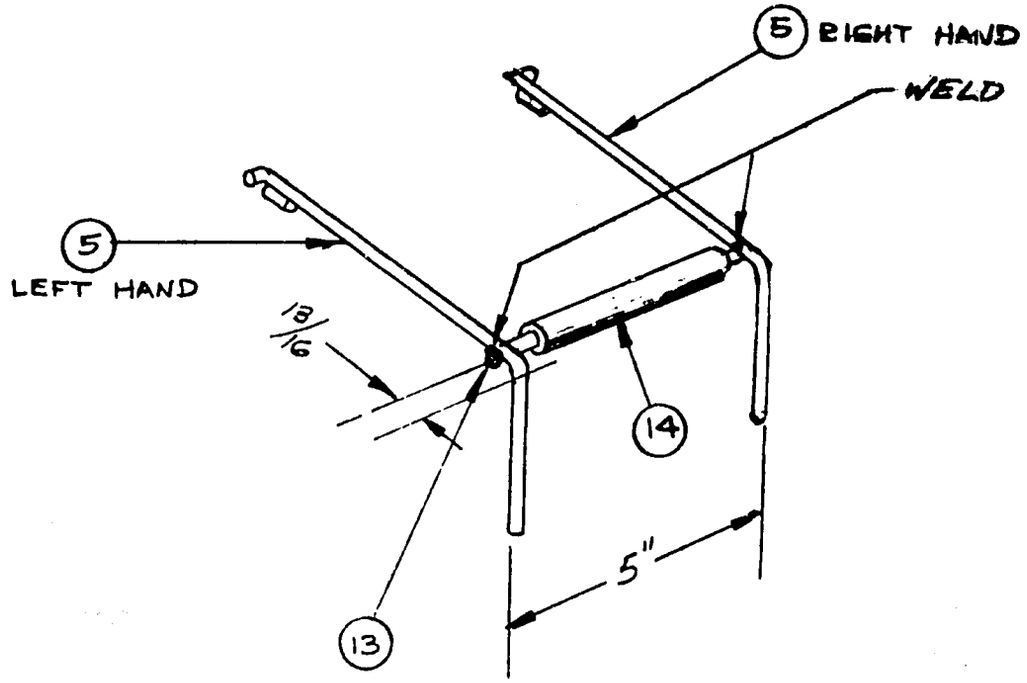

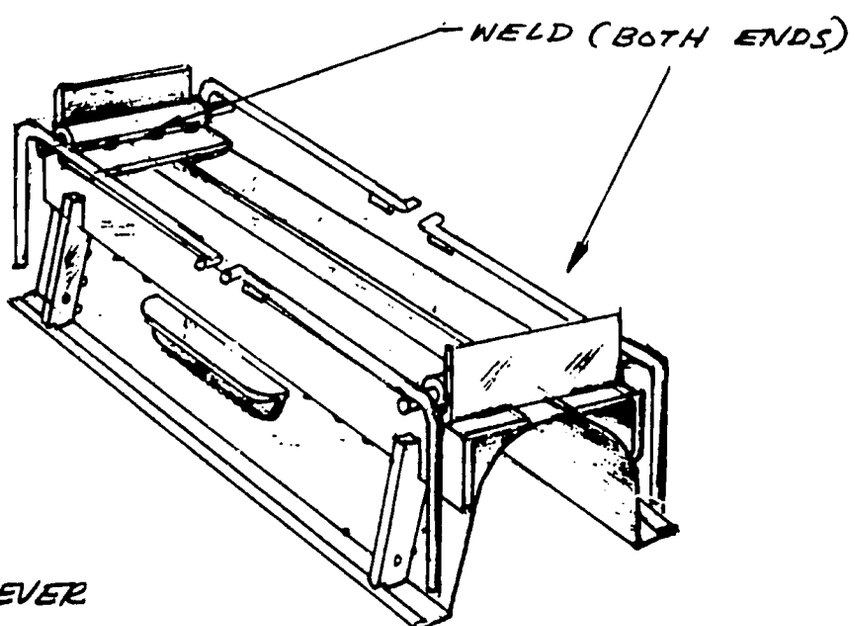

K. WELD LEVER
HINGE TO ANGLE
BRACKETS

7P

L. WELD ON HINGE PIECES № 16 ON BOTH ENDS USING DOORS #6 AS GUIDE. ALSO WELD ON № 4 RODS (2)

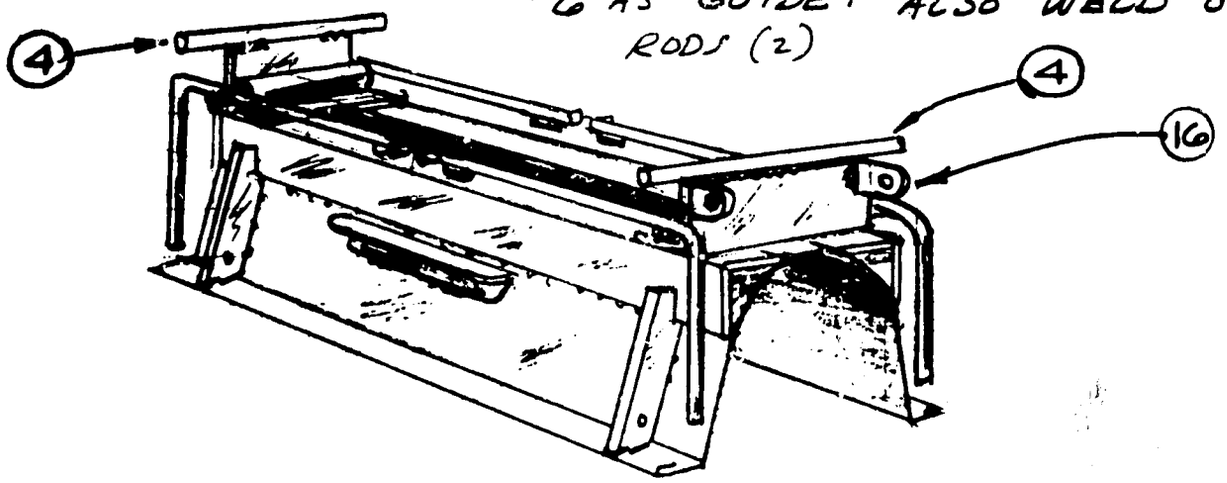

M. ATTACH DOORS WITH HINGEPIN (15), WELD IN PLACE, AND PUT SPRINGS #9, CONNECTORS #19, AND ATTACHMENTS #17 IN PLACE. UNIT IS NOW COMPLETE. EXCEPT FOR PARTS 10, 11 & 12, WHICH NOW CAN BE INSTALLED.

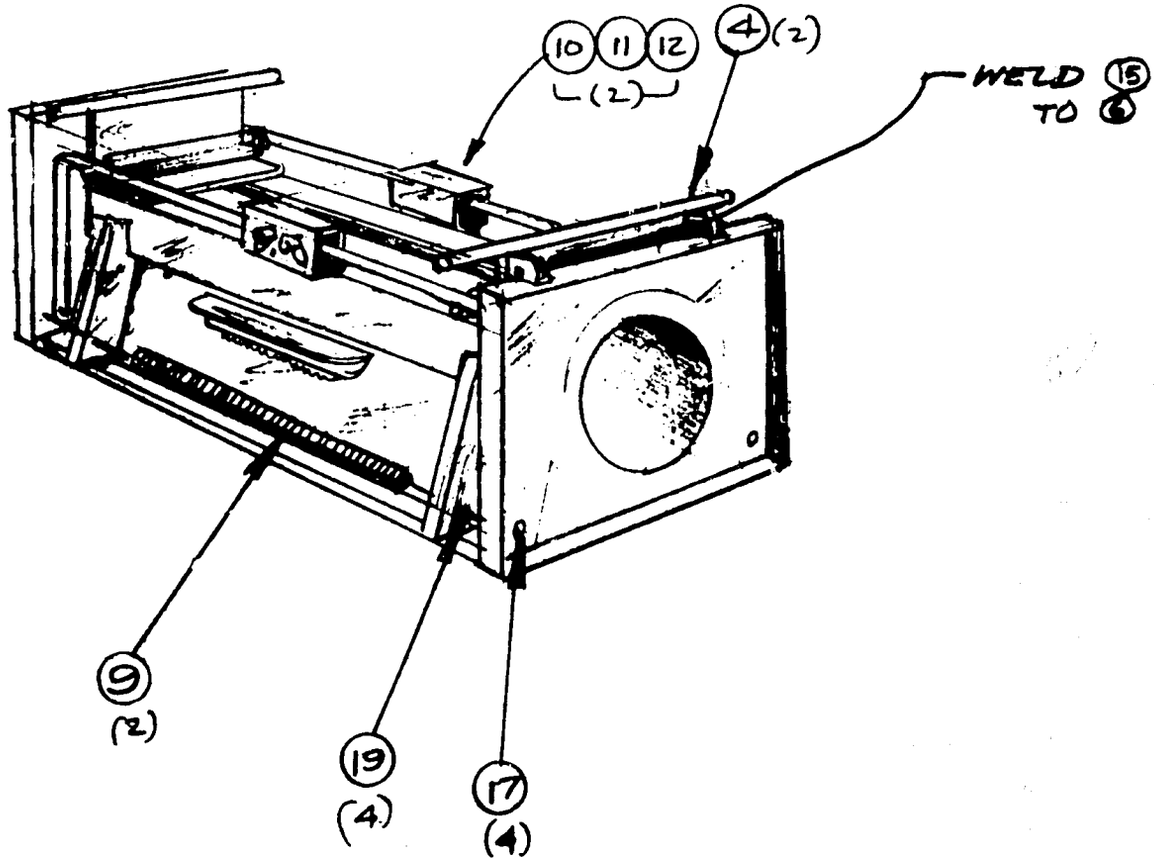

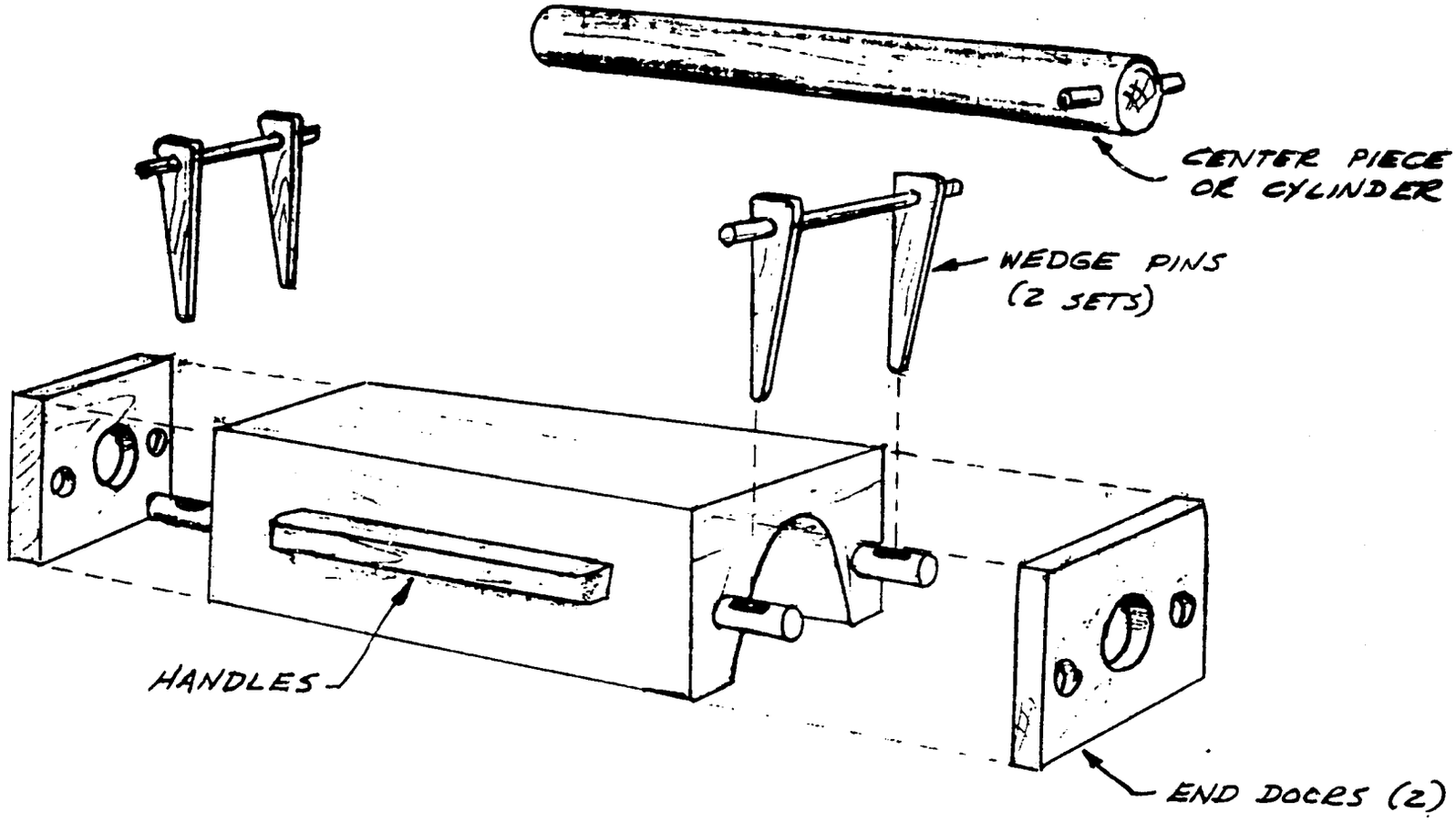

ALL WOOD CEMENT TILE MACHINE
(DIMENSIONS OF TILE SAME AS
ALL METAL MACHINE)

H/McCarns 12/62

22

MAKING CONCRETE TILE

ABSTRACT

Detailed directions are presented here for using the "Concrete Tile Machine."

TOOLS AND MATERIALS

Fresh Portland Cement
Clean sand, screened through a 1/4" screen
Clean water
All-metal tile machine
Metal tamper
Plastering trowel
Work bench
Shop with concrete floor
One 12-quart bucket
D-handled shovel (sq. point)
Large hoe for mixing cement
A strong dust pan with a handle

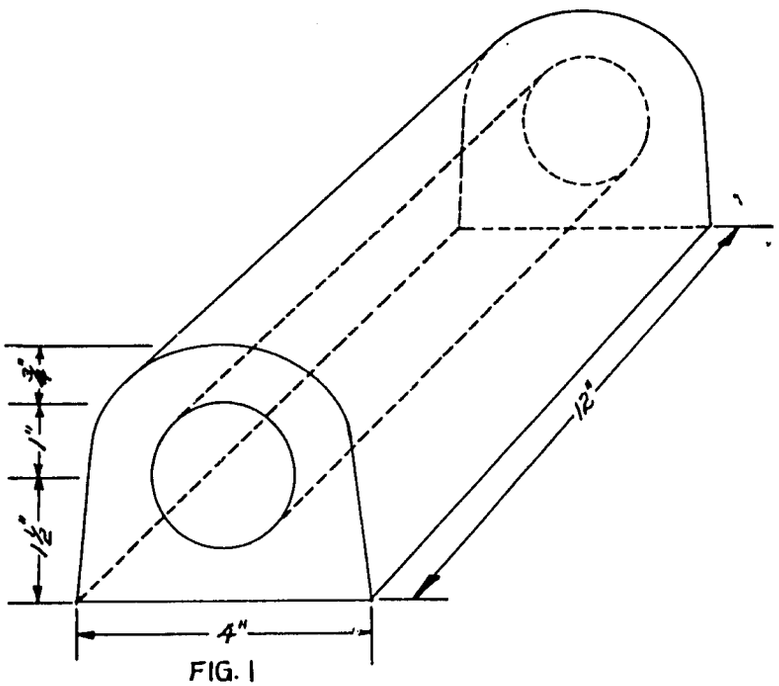

FIG. 1
THE FINISHED TILE

DETAILS

Steps in making tile	Important suggestions
1-Screen the sand and spread out one cu.ft. on the shop floor.	1-Use cu.ft. measuring box without a bottom.
2-Spread 1/4 cu.ft. cement over the sand.	2-Measure in the cu.ft. box.
3-Mix thoroughly with shovel and hoe.	3-Turn over the pile four to six times.
4-Spread the pile out and scatter the mixing water over it.	4-The amount of water will be no more than 2/3 the volume of cement, including any water in the damp sand. The mix should be as dry as possible and still be plastic.
5-Make the batch into tile before 45 minutes of time elapses. Put mortar on work bench after mixing.	5-Cement loses its strength if put into the form too long after mixing.
6-Fill the form (without the pipe) 1/4 full and tamp the ends with two strokes with the (gloved) left hand.	6-This gives the tile perfect ends.
7-Insert the pipe and fill the form with mortar.	7-One dip with a strong dust pan without a handle.
8-Tamp the sides of the tile.	8-Three strokes with the iron tamper
9-Fill the form again.	9-Another dip with dust pan.
10-Turn the tamper over and pack the cement again.	10-Three strokes with the plane surface of the tamper.

11-Use the trowel to finish the tile.

11-Strike off the surplus with one stroke and leave the surface trowelled level with a second stroke.

12-Carry the tile and form to a place where the floor has been lightly oiled.

12-In carrying the form, do not touch the pipe.

13-Place the form carefully on its side on the floor and then tip it quickly to an upside down position.

13-Hesitation in the middle of the tipping action may cause the mortar to fall out.

14-Pull out the pipe, turning it slightly first. Hold the form down with the left hand.

14-If the pipe is too hard to remove, it may have irregularities and need to be dressed lightly in the lathe.

15-Lay the pipe on top of the form.

15-This gives the form a slight jar.

16-Gripping the sides of the form with both hands, push down on the levers which open the hinged ends and then left the form off the tile.

16-In lifting use leg action and hip action. Bending the elbows may knock an end off the tile.

17-Leave the tile in its place on the floor over night.

17-Sprinkle very lightly with water if it begins to get dry. To dry at this stage would ruin it.

18-The next day the tile can be picked up by gripping it at its middle with the hand. Stack the tile at the side of the shop to clear the center floor space for another day of production.

18-The first day, stack only two layers high, as the tile is not strong yet. The second day, they can be stacked as high as desired.

19-When tile are one day old, it is a good time to make 45-degree end on such tile as have been injured in manufacture.

19-One needs about 5% (or more) of the tile made with a 45-degree end for use in turning corners in the tile line.

20-<u>Keep the tile wet at least a week</u>.

20-The strength is increased by each day that they are kept wet.

21-If you need further instruction in regard to the fundamental principles of good concrete construction, study the entries on concrete. The machine used in the tile-making operation outlined above can be manufactured in a good modern farm shop, if the mechanic has the entry "Concrete Tile Machine."

EVALUATION

This machine will allow one man to make up to two tiles per minute, although a good day's work would be 300 or more tiles.

Material From - "A Machine for Making Concrete Tile for Irrigation and Drainage" by J. Oscar Brown, U.S. Department of Commerce, O.T.S. Information Kit, Vol. II #2, November 1961.

SIPHON TUBE

Abstract

This metal siphon tube is used for irrigation and can be made and easily repaired by the local artisans.

Tools and Materials

Galvanized sheet metal - 0.5 m x .75 is enough for one large siphon or several small ones.
Tinsmith tools - solder, tinsnips, hammers, anvil.

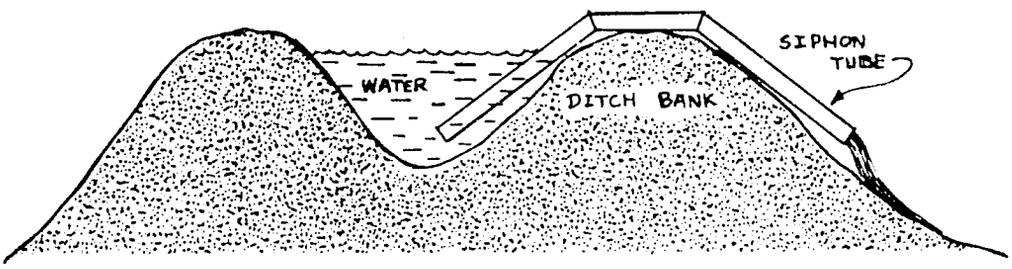

CROSS SECTION OF DITCH SHOWING PLACEMENT OF SIPHON TUBE

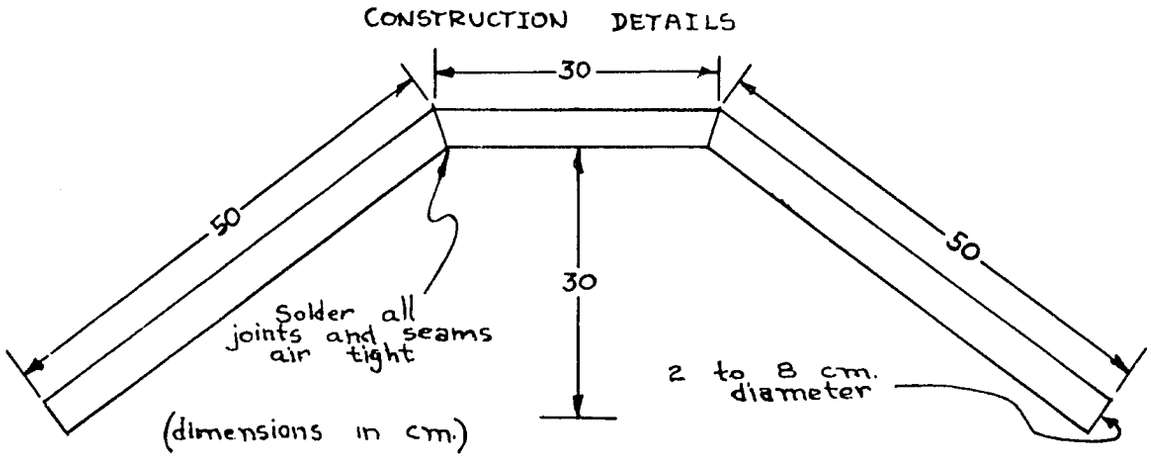

Details

The purpose of a siphon tube is to carry the water out of the ditch without cutting a hole in the ditch bank. In many soils a small hole cut in the ditch bank soon becomes a large hole due to erosion. Imported plastic siphons are expensive, easily broken and usually impossible for local people to repair.

There are several good ways to start a siphon tube. The simplest way is to put the tube in the ditch until it fills with water. Holding one hand over the end of the tube, so that

air cannot get in, lift the tube out and place it as shown in the figure above. Be sure the other end of the tube does not come out of the water while placing the tube. When the tube is in place, remove the hand and the water will begin to flow. The end of the tube outside the ditch must be lower than the level of the water in the ditch.

Evaluation

This siphon has been found useful in Afghanistan.

Material from - Dale Fritz, The Asia Foundation

SPRING WINDER
(For springs used in Backpack Duster)

Abstract

This method for winding springs can be used to make springs of any size. The sketches show the diameter of the springs used in the Backpack Duster, which is included in this handbook.

Tools and Materials

- 1 block of wood, 4x4 inches (10x10 cm) by 39 inches long (1 meter)
- 1 rod, ¼ inch (6 mm) by 39 inches
- 1 pipe, ½ inch (1.25 cm) by 12 inches long (30 cm)
- 4 small nails
- 1 drill
- 1 drill bit, 1/12 inch (2 mm)
- 1 drill bit, ¼ inch (6 mm)
- 1 drill bit, ½ inch (1.25 cm)
- Spring steel wire

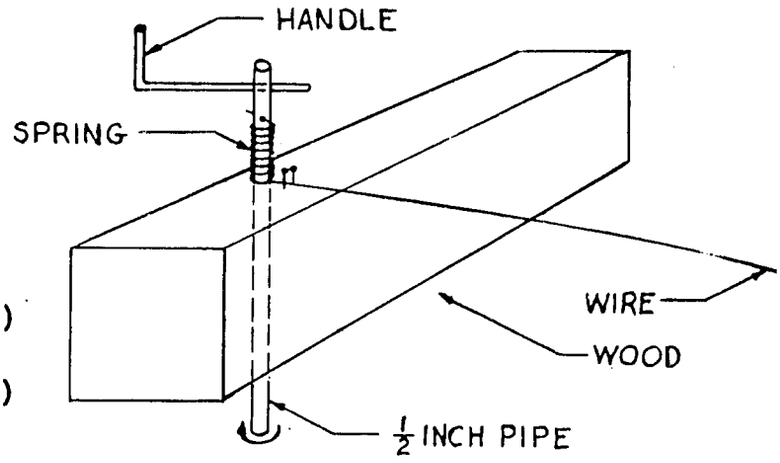

METHOD OF WINDING LARGER SPRING

Details

A good source of spring wire is from the bead of an old tire. The rubber should not be burned off as this destroys the spring-strength of the wire.

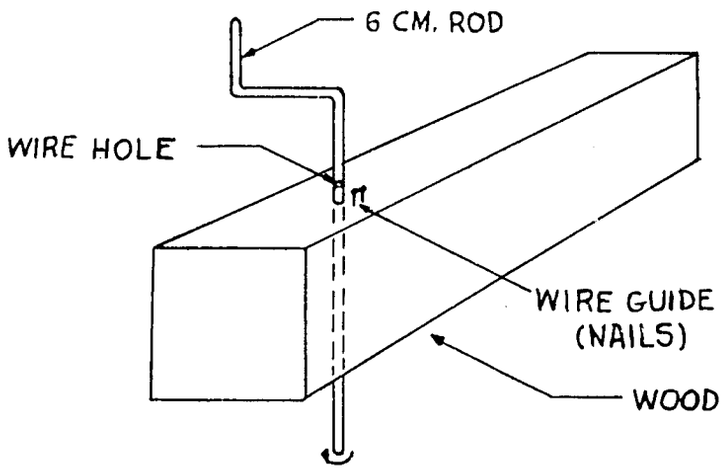

METHOD OF WINDING SMALL SPRING

A ¼ inch hole is drilled in one end of the wood block and a ½ inch hole is drilled in the other end. A ½ inch hole is drilled through the ¼ inch rod and through the ½ inch rod to insert the end of the wire. A ¼ inch hole is drilled through the ½ inch pipe to hold the winding handle. Drive two nails close together, about 1/12 to 1/16 inch from each hole in the wood block. Put the pieces together as shown in the drawing.

The wire is fed through the nail wire guide and then through the 1/12 inch hole in the rod or pipe spool. The spool is then turned in

21

a clockwise direction until the desired length of spring is wound. The springs for the Backpack Duster are 1/3 inch (9 mm) for the ¼ inch spool and 1.4 inches (3½ cm) for the ½ inch spool.

Evaluation

These springs have been made and used in Afghanistan for the Backpack Duster.

Material from...Dale B. Fritz, The Asia Foundation

28

FRESNO SCRAPER

Abstract

This scraper is used for moving larger amounts of earth from higher spots to low areas. It can be made by farmers or small manufacturers, if equipment and materials are available.

Tools and Materials

2 steel plates for sides, 6 mm x 40 cm x 60 cm
1 steel plate for blade, 6mm x35 cm x 1.24 meters
1 steel plate for backplate, 6 mm x 52 cm x 1.24 meters
4 steel plates for stiffener plates, 6mm x 10 cm x 18 cm
1 steel plate for stiffener plate, 6 mm x 10 cm 28 cm
75 flathead rivets, 15 mm x 3 cm
12 flathead rivets, 20 mm x 3 cm
2 angle irons for runner, 6 mm x 45 mm x 45 mm x 1.57 meters
2 steel plates for shoes, 6 mm x 12,5 cm x 66 cm
2 strap iron for bar brace, 10 mm x 4 cm x 32 cm
1 iron bar for handlebar, 15 mm x 5 cm x 1.6 meters
1 rope, 13 mm x 2 meters
2 side plates, draft clamp stock, 20 mm x 21 cm
2 machine bolts with nut and washer, 13 mm x 4 cm
2 draft bar rod stock, 20 mm x 1.2 meters
2 draft bar rod stock, 20 mm x 95 cm
2 draft bar loop stock, 20 mm x 45 cm
2 draft bar loop stock, 20 mm x 38 cm
2 eye bolts with nuts and washers, 20 mm x 25 cm
2 strap iron clevis stock, 10 mm x 4 cm x 60 cm
2 machine bolts with nuts and washers, 13 mm x 10 cm
1 oak draft bar, 6 cm x 15 cm x 1.52 cm
4 machine bolts with nuts and washers, 13 mm x 6 cm
8 machine bolts with nuts and washers, 13 mm x 4 cm
1 oak stop bar, 4 cm x 8 cm x 1.45 meters
2 stop bar stock, threaded one end
2 stop bar ball nuts and washers, 13 mm

Details

Careful preparation of the land for irrigation and good water usage results in saving of labor, water and soil, and in better crop production. The amount of land preparation depends on the crop, land surface and method of irrigation. Often, farmers try to irrigate rough land without enough field ditches or means of controlling the water. This is because they do not have large equipment that often is too expensive for small farmers.

The following four articles tell how to prepare land with small equipment that can be made by farmers or small manufacturers and can be pulled by animals or farm tractors.

79

The Fresno or scraper is used for moving large amounts of soil from high spots to low areas. It is a large metal scoop that can be built in a number of sizes, depending on the number of animals that can be used to pull it. Good results will beobtained by using the size described here with 2 oxen or 2 to 4 horses.

Plow the high spots that you want to remove, as this will make it easier to load the Fresno and save a great deal of power.

The Fresno is made so that the power used to pull it will also help in loading and unloading. The rope in the handle is used for pulling the scoop into position for loading and to spread the soil evenly when unloading.

Always be careful when operating the Fresno. Do not have any part of your body directly above the handle. Always keep a firm grip on the handle, while loading or getting ready to unload. A sudden jerk or unseen rough spot may cause the handle bar to fly up and strike you.

To load the Fresno simply lift the handle until the front of the bit goes into the ground at a depth the animals can pull. Do not try to make too deep a cut or the Fresno will be pulled over or the animals pulled to a stop. You will soon learn how to hold the handle for the proper cut and smooth loading.

When the Fresno is full, push down on the handle and it will go forward without touching the ground until you are ready to unload it. Lift the handle when you are ready to unload and the pull of the animals will turn it into the dumping or spreading position. The stop bar across the top of the Fresno can be moved to change the depth of the spreading of soil. Move it forward for a shallow depth or back for a deeper spread.

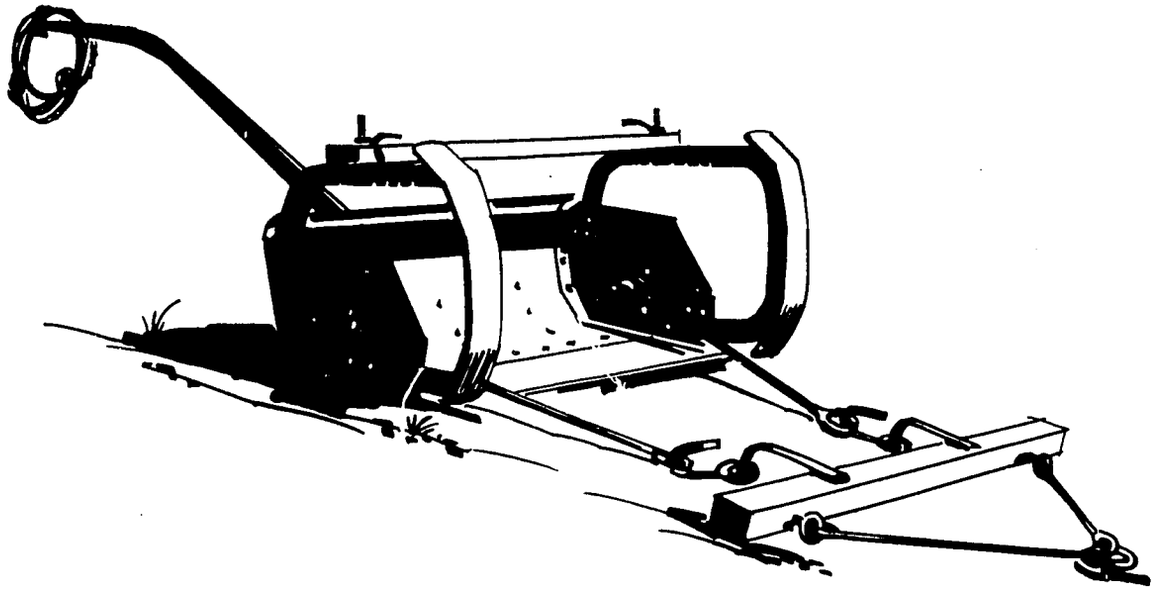

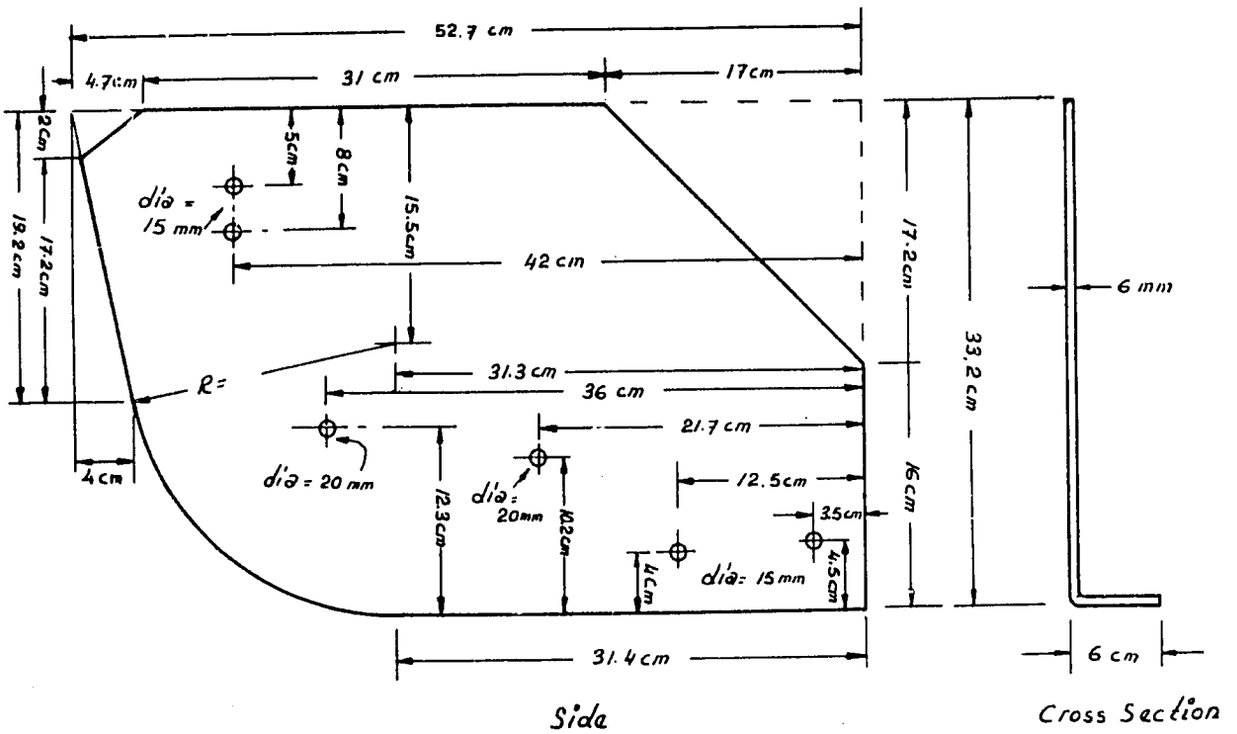

End Plate

FRESNO
1 of 4

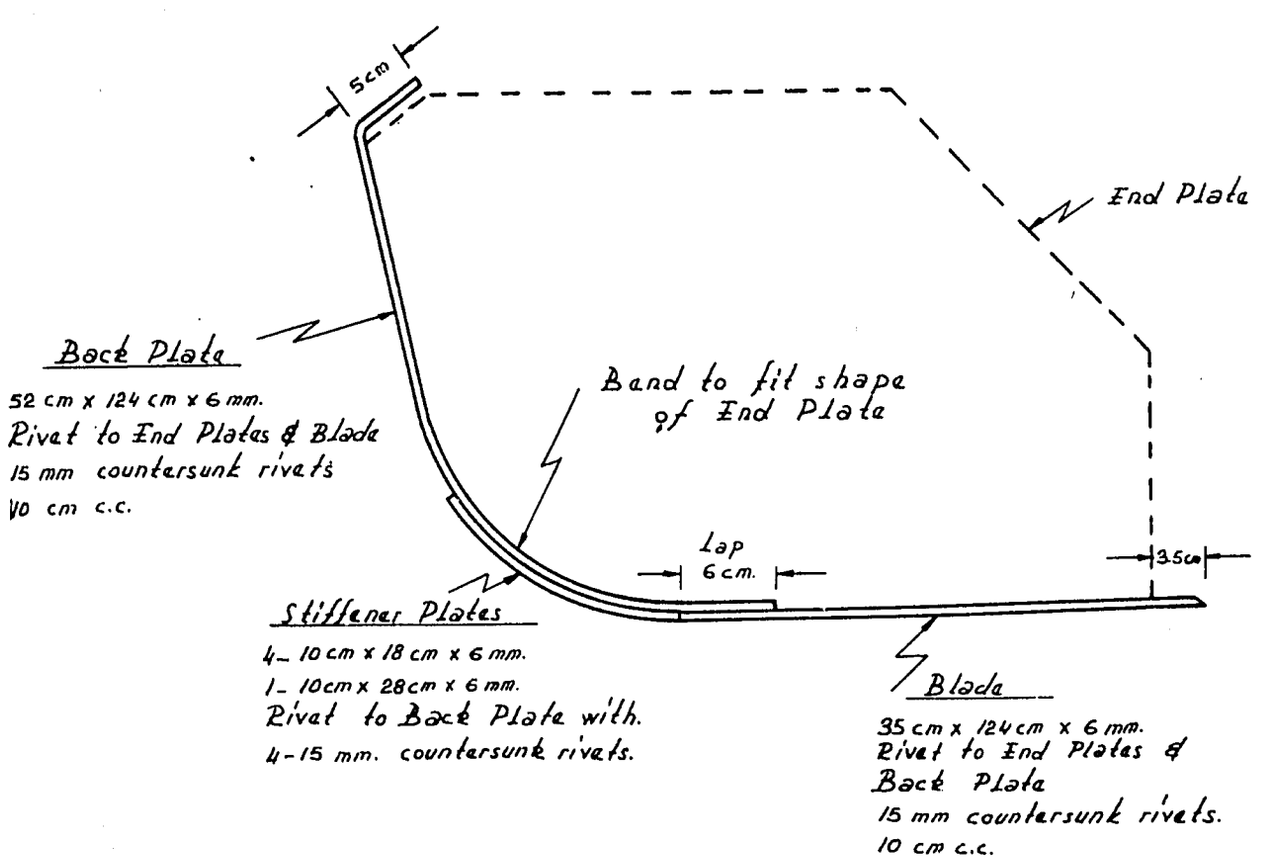

Arrangement of Blade, Back & Stiffener Plates
End View

31

Shoes

12.5 cm x 6 mm x 66 cm Plate

Rivet to Runners, 6 -20 mm countersunk rivets.

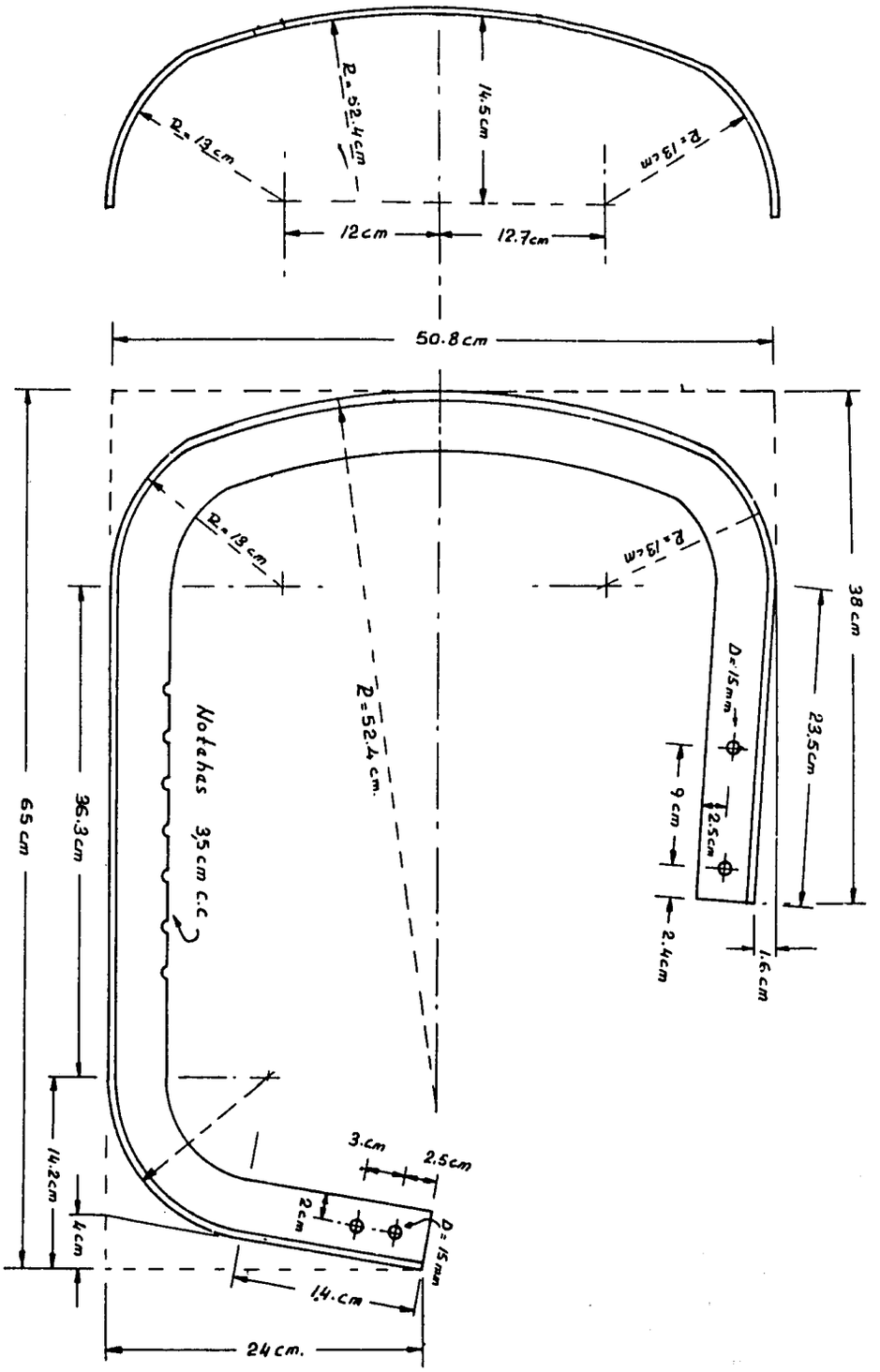

FRESNO

2 of 4

Runner

4.5 cm x 4.5 cm x 6 mm Angle

157 cm. long (overall)

37

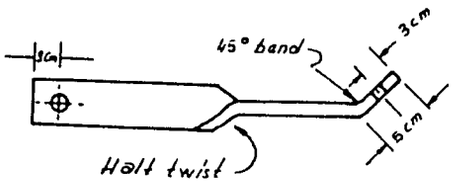

Bar Braces

2 - 10 mm x 4 Cm x 32 cm
Holes 15 mm dia

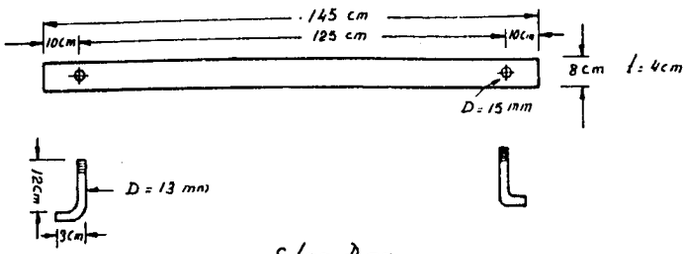

Stop Bar

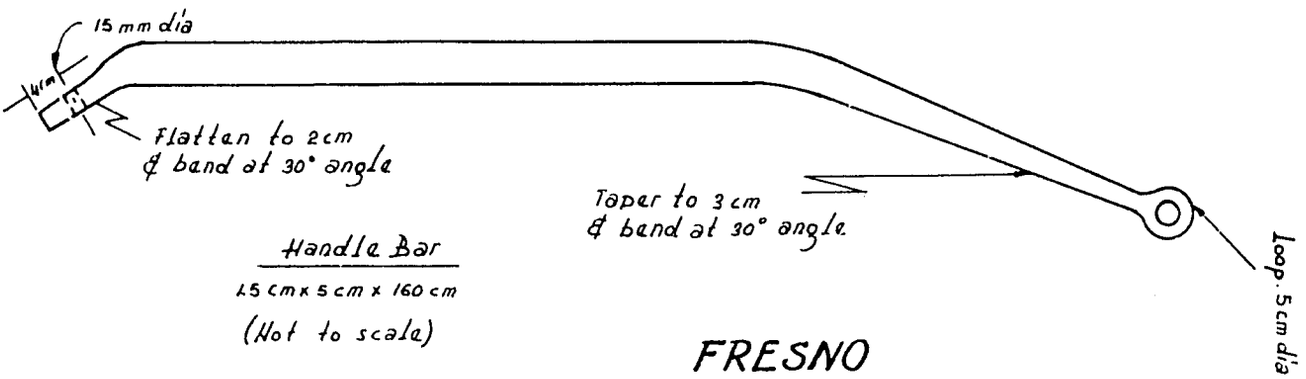

Handle Bar

4.5 cm x 5 cm x 160 cm

(Not to scale)

FRESNO
3 of 4

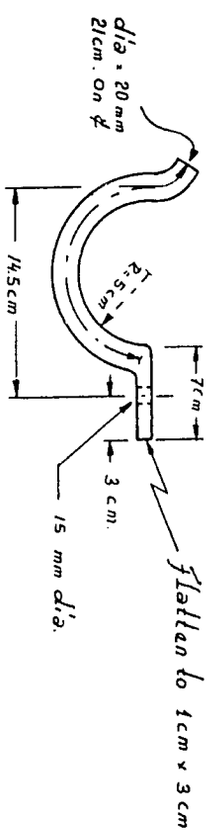

Side Plate Draft Clamp

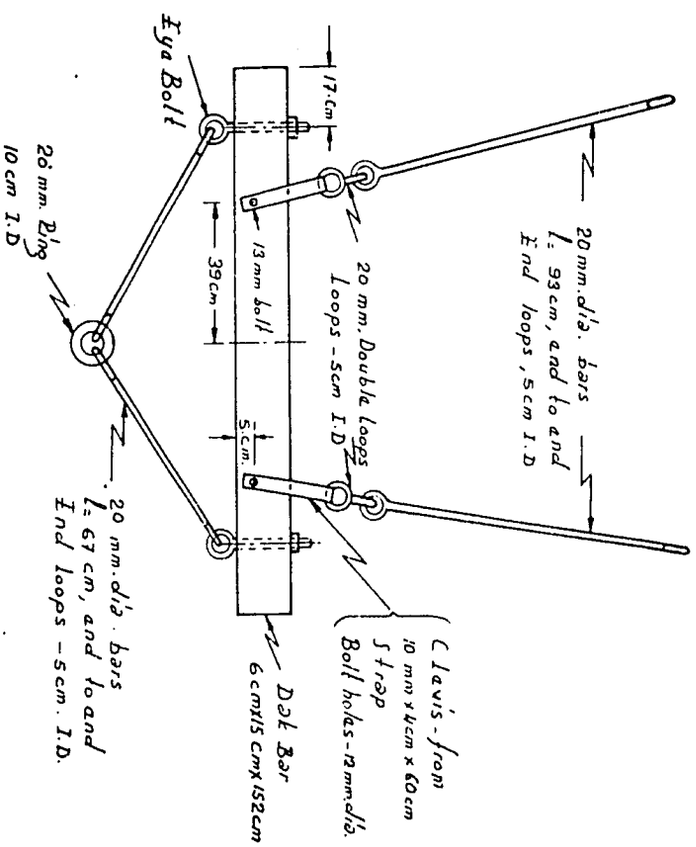

Draft Bar Assembly

FRESNO

33

After it has been emptied and returned to the point of loading give the rope a hard pull and the fresno will fall back into position for loading.

Usual hitches for animals pulling the fresno are...

- two horses
- two oxen
- three horses

Two lines are used. Each outside horse is tied back to the hame or collar of the center horse. The center horse is then guided by the inside strap from the lines.

Evaluation

This scraper can be built locally at low cost and do the work of larger, more expensive equipment. It has been used in Turkey and when demonstrated at a regional seminar held at Izmir, Turkey aroused the interest of participants from other nations.

Material from...Construction and Use of Small Equipment for Farm Irrigation by Carl M. Forsberg, James D. Metzger and John C. Steele, USOM/Turkey in cooperation with the Turkish Ministry of Agriculture

34

BUCK SCRAPER

Abstract

This scraper may be used for leveling small humps of earth where the haul distance is short. It can be made by farmers or small manufacturers, if equipment and materials are available.

Tools and Materials

1 buck board, 5 cm x 30 cm x 183 cm
1 trailer board, 5 cm x 30 cm x 122 cm
1 iron pipe handle, 3 cm x 2 cm
1 strap iron cutting edge, 6 mm x 10 cm x 183 cm
4 strap iron hinges, 6 mm x 4 cm x 30 cm
2 strap iron, 6 mm x 4 cm x 30 cm
2 strap iron pipe clamps, 6 mm x 4 cm x 15 cm
2 band strap iron pipi clamps, 6 mm x 4 cm x 20 cm
1 bolt for hinge. 16 mm x 46 cm
2 eye bolts, 16 mm x 9 cm
2 carriage bolts, 13 mm x 13 cm
4 carriage bolts, 13 mm x 10 cm
22 carriage bolts, 13 mm x 8 cm
2 washers, 16 mm
28 washers, 13 mm
1 chain or cable hitch, 5 mm

Details

The buck-scraper may be used for filling ditches or for smoothing border irrigation systems. After the border levee has been made, it is very important to smooth the area between and close to the levees. The buck scraper can be used very effectively for this purpose by shortening the hitch on one side and allowing the blade of the scraper to run at an angle, thus shoving the soil into the rough areas around the newly-built levee.

After using the fresno to move large amounts of soil from high spots to low spots, the surface of the cut and fill areas will usually be rough. The buck scraper is useful for smoothing out the uneven spots caused by the fresno.

Earth moving may be aided by loosening the soil to be moved by plowing before using the buck scraper.

The buck scraper is loaded by pushing down on the handle as the equipment moves forward. The handle must be held down while the soil is being transported. The scraper is unloaded by lifting up on the handle. A shallow spread is made by lifting the handle slightly and a deeper spread by

35

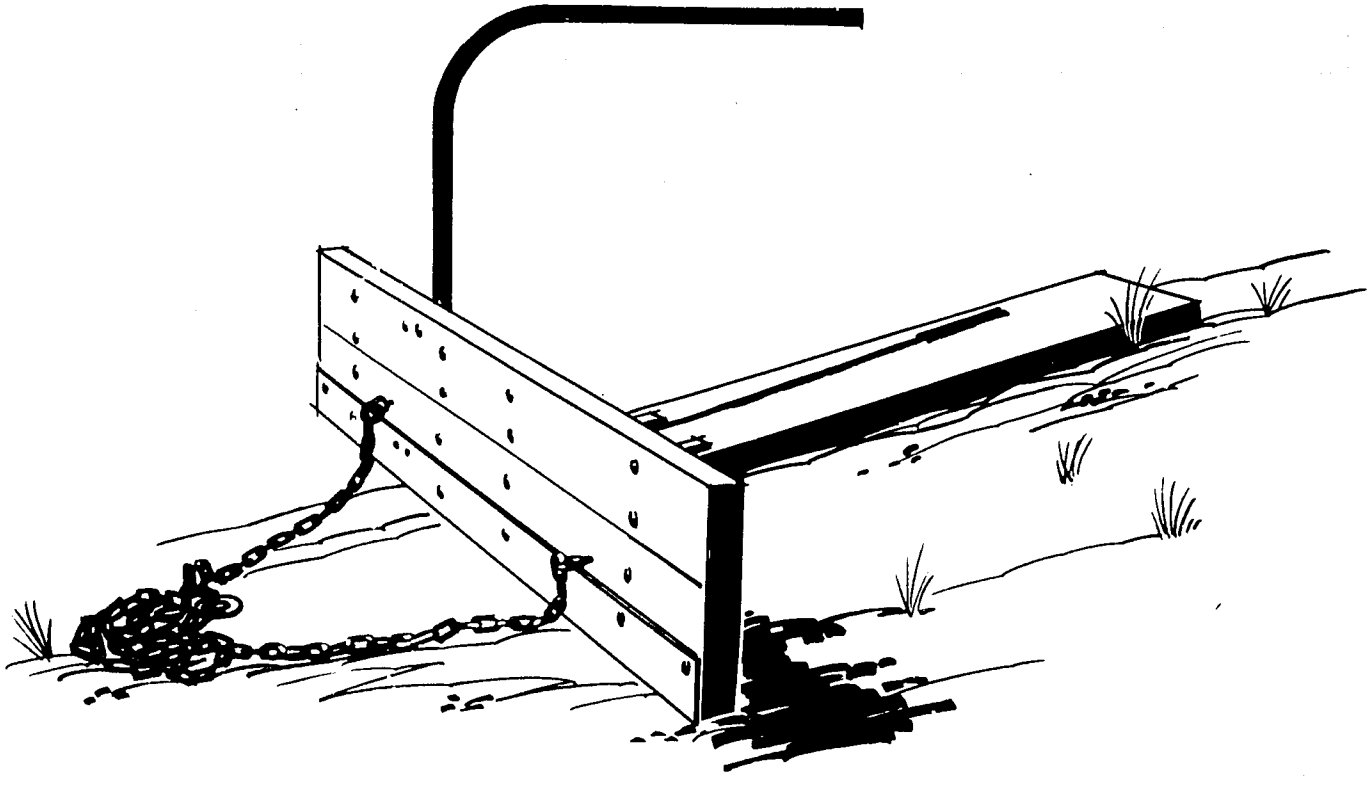

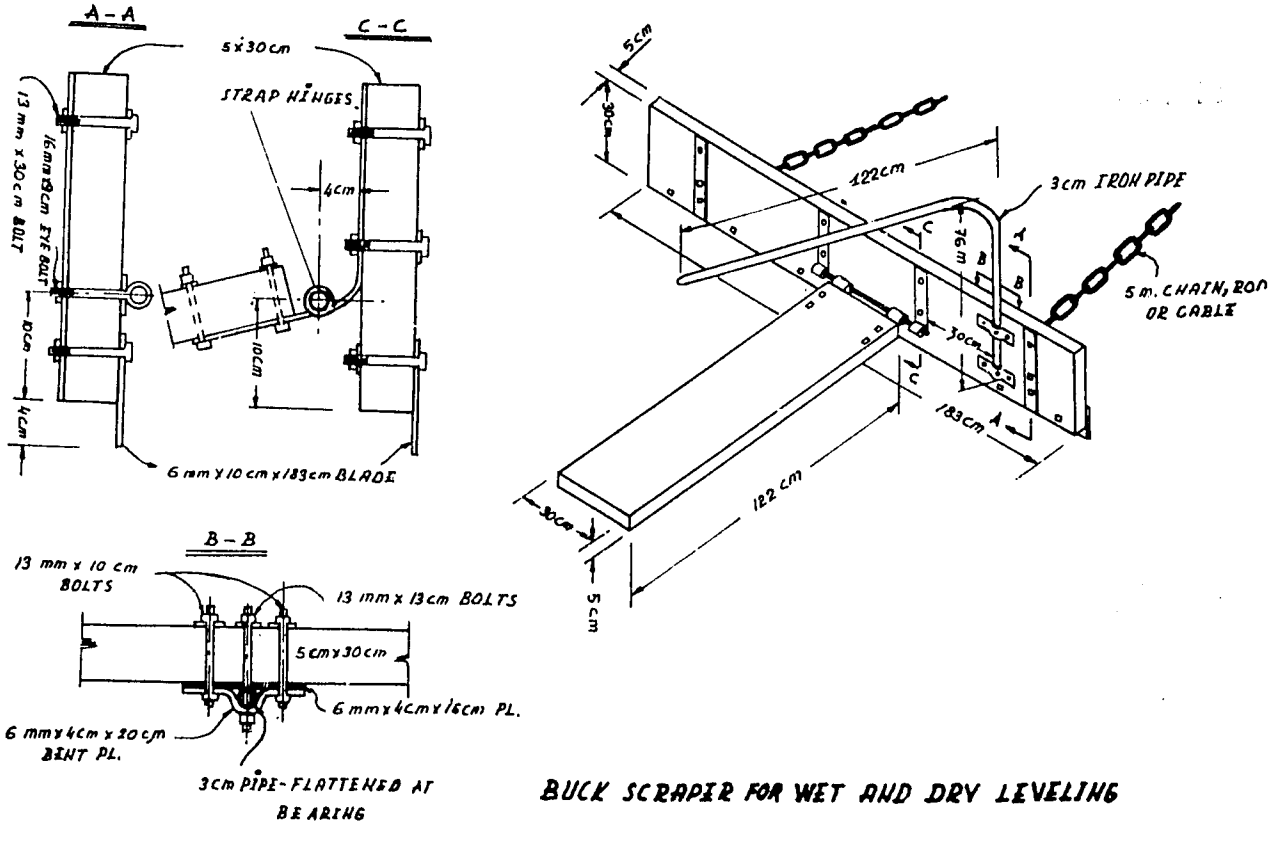

BUCK SCRAPER FOR WET AND DRY LEVELING

36

pushing the handle farther forward.

The most common hitches with the buck scraper are:

- 2 oxen
- 2 horses
- 3 horses

The buck scraper may be made in different sizes according to the abailable power.

Evaluation

This scraper can be built at low cost and do the work of more expensive equipment. It has been used effectively in Turkey.

Material from...Construction and Use of Small Equipment for Farm Irrigation by Carl M. Forsberg, James D. Metager and John C. Steele, USOM/Turkey in cooperation with Turkish Ministry of Agriculture

FLOAT WITH ADJUSTABLE BLADE

Abstract

The float is very useful for leveling a field before planting a crop. It can be made by farmers or small manufacturers with locally-available materials.

Tools and Materials

2 runners, 5 cm x 30 cm x 5.5 meters
3 blades, 5 cm x 30 cm x 1.8 meters
2 cross braces, 5 cm x 20 cm x 1.9 meters
2 diagonal braces, 5 cm x 15 cm x 3.75 meters
2 diagonal braces, 5 cm x 15 cm x 3 meters
4 side blocks, 5 cm x 30 cm x 45 cm
1 lever, 5 cm x 10 cm x 1.5 meters
2 strap iron runner plates, 7 mm x 50 mm x 6 meters
3 angle iron cutting edges, 7 mm x 50 mm x 1.8 meters
2 steel tie rods (threaded both ends), 7 mm x 2 meters
4 nuts, 7 mm
8 washers, 7 mm
1 pipe axle, 5 cm diameter x 2 meters
2 steel plates, 10 mm x 20 cm x 20 cm
3 u-bolts, with nuts and washers, 13 mm x 20 cm
2 hitch stocks, 7 mm x 50 mm x 70 cm
50 flat head screws, 4 cm (No. 14)
15 flat head stove bolts, with nuts and washers, 6 mm x 8 cm
4 carriage bolts, with nuts and washers, 13 mm x 13 cm
1.5 kg nails, 13 cm (40 d)
1.5 kg nails, 10 cm (20 d)
1 rope, 10 mm x 4 meters
1 chain or cable hitch, 5 meters

Details

All earth moving operations, where any quantity of soil is moved, leave the land surface in an uneven condition. The float is the best piece of equipment for obtaining a smooth, even surface before a crop is planted. It is difficult to do a perfect job of leveling the first season after earth has been moved. The areas from which the soil has been removed are usually hard and the areas to which it has been moved are soft so that uneven settling results. Also, general tillage and plowing operations sometimes roughen the land surface. Using the float over the entire field each season before planting the crop will help answer these problems. Best results may be obtained by floating the field in both direction (at 90 degrees), going back and forth. The last floating should be in the direction of the irrigation flow.

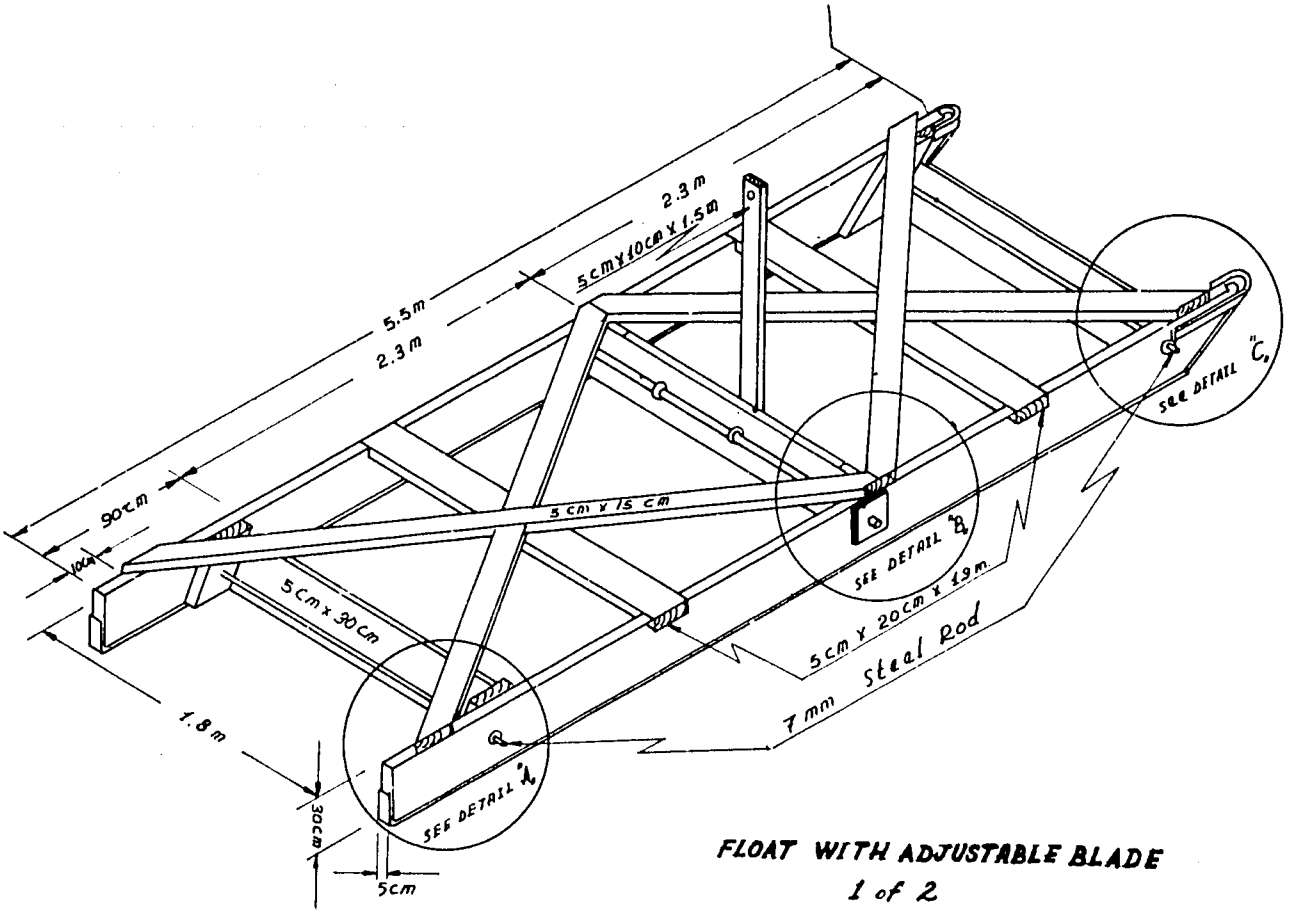

FLOAT WITH ADJUSTABLE BLADE
1 of 2

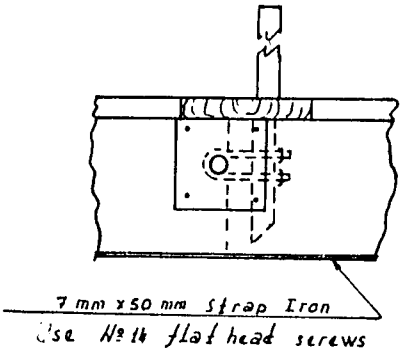

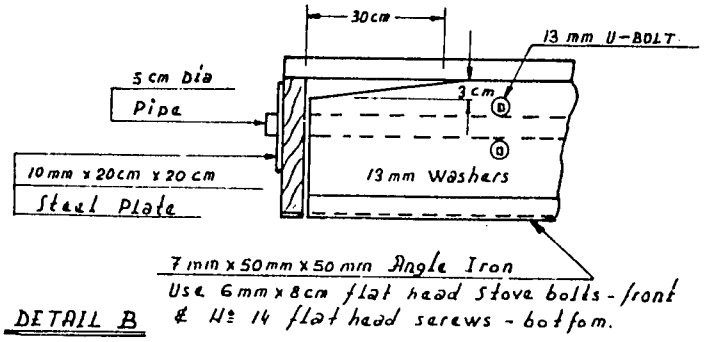

DETAIL B

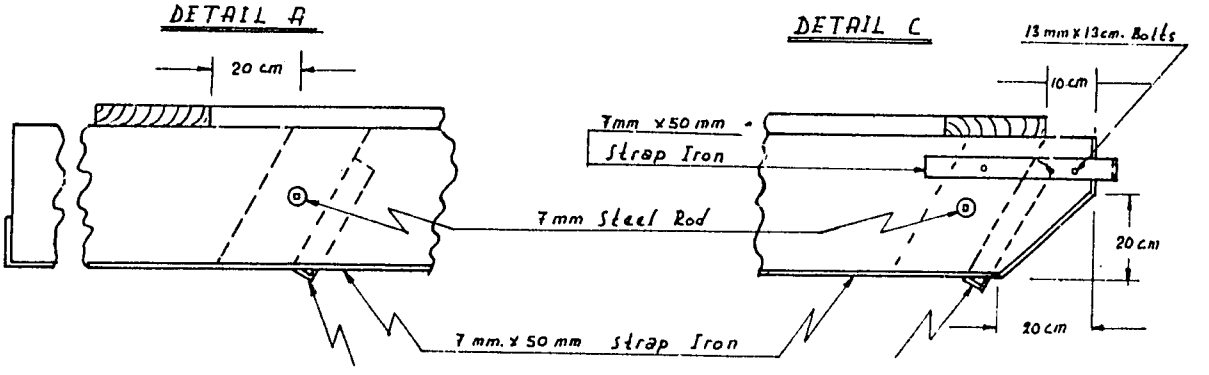

39

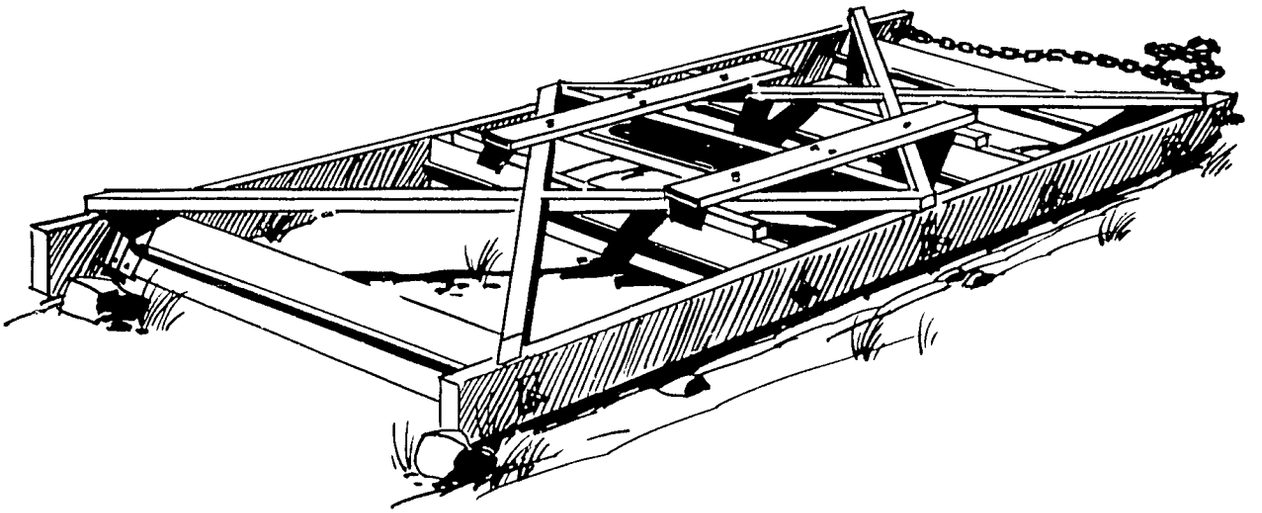

When borders are built in a field for border irrigation it is usually best to use the float over the entire areas between the borders before seeding.

The float can be built in various widths according to the available power. It is necessary, however, that the float be at least 5 meters long to insure a good job of leveling the earth. The adjustable blade is optional but is often desirable if a buck scraper is not available.

Common hitches for the float are the same as used with the fresno.

Evaluation

This float has been effectively used in Turkey.

Material from...Construction and Use of Small Equipment for Farm Irrigation, by Carl M. Forsberg, James D. Metzger and John C. Steele, USOM/Turkey in cooperation with Turkish Ministry of Agriculture

V-DRAG

Abstract

The V-Drag is used for making farm ditches, levees or borders for border irrigation. It can be made locally by farmers or small manufacturers, if materials are available.

Tools and Materials

(See illustration for chart of materials)

Details

1. V-DRAG FOR CONSTRUCTION OF FARM DITCHES

After the desired ditch line has been established by means of a level or transit, the plow may be used to make a furrow where the line has been staked. Plow down one way, then turn and plow back again in the same furrow but throwing the soil the other way.

When the furrow has been made in plowing down and back, use the V-Drag to crowd the soil out of the furrow. By making a complete round (down and back) the soil can be thrown out on both sides of the ditch. By alternately plowing and using the V-Drag to throw the soil out, any desired depth of ditch can be obtained.

The method of hitching the animals is important. If two horses are used, it is necessary to hitch them far enough apart so that both can walk outside the ditch. If two oxen are used it is important that the yoke be long enough to permit each animal to walk on the outside of the ditch.

If the soil is hard and more power is required, 3-horses can be used and one horse can walk in the ditch and one on each side.

The depth of cut made by the V-drag can be adjusted to the available power. Shortening the hitch will reduce the depth of cut as will shifting your weight to the back of the drag. Either lengthening the hitch or shifting your weight to the front will increase the depth of cut.

The handle of the V-Drag can be used to vary the width of the ditch. Pressing down will widen it while lifting up will narrow the width.

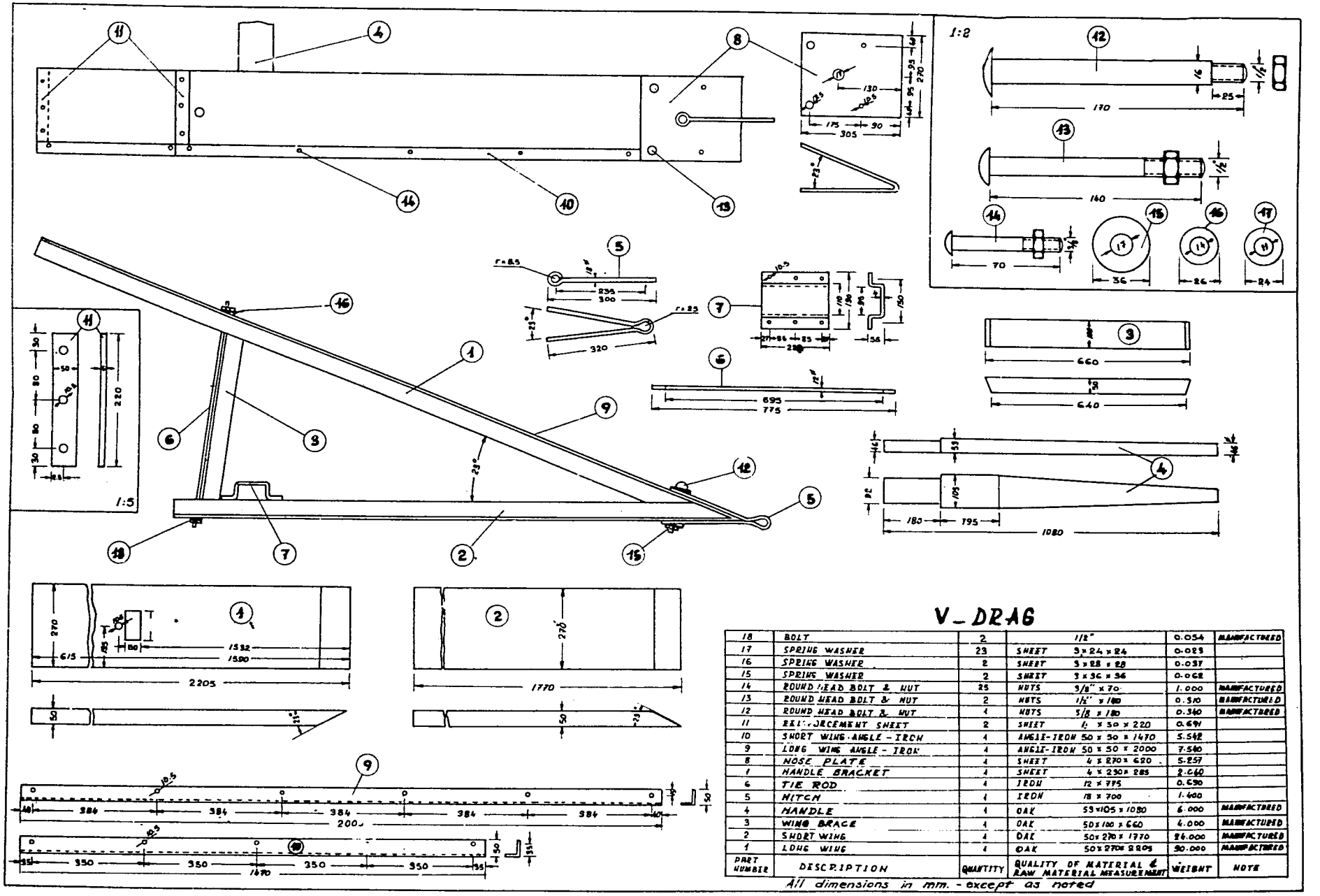

V_DRAG

PART NUMBER	DESCRIPTION	QUANTITY	QUALITY OF MATERIAL & RAW MATERIAL MEASUREMENT	WEIGHT	NOTE
18	BOLT	2	1/2"	0.054	MANUFACTURED
17	SPRING WASHER	23	SHEET 3 x 24 x 24	0.023	
16	SPRING WASHER	2	SHEET 3 x 28 x 28	0.037	
15	SPRING WASHER	2	SHEET 3 x 36 x 36	0.062	
14	ROUND HEAD BOLT & NUT	25	NUTS 5/8" x 70	1.000	MANUFACTURED
13	ROUND HEAD BOLT & NUT	2	NUTS 1/2" x 160	0.310	MANUFACTURED
12	ROUND HEAD BOLT & NUT	4	NUTS 5/8 x 180	0.360	MANUFACTURED
11	REINFORCEMENT SHEET	2	SHEET 4 x 50 x 220	0.694	
10	SHORT WING ANGLE - IRON	4	ANGLE-IRON 50 x 50 x 1470	5.542	
9	LONG WING ANGLE - IRON	4	ANGLE-IRON 50 x 50 x 2000	7.540	
8	NOSE PLATE	4	SHEET 4 x 270 x 620	5.257	
7	HANDLE BRACKET	4	SHEET 4 x 230 x 285	2.060	
6	TIE ROD	4	IRON 12 x 775	0.630	
5	HITCH	4	IRON 18 x 700	1.400	
4	HANDLE	4	OAK 53 x 105 x 1080	6.000	MANUFACTURED
3	WING BRACE	4	OAK 50 x 100 x 660	4.000	MANUFACTURED
2	SHORT WING	4	OAK 50 x 270 x 1770	24.000	MANUFACTURED
1	LONG WING	4	OAK 50 x 270 x 2205	30.000	MANUFACTURED

All dimensions in mm. - except as noted

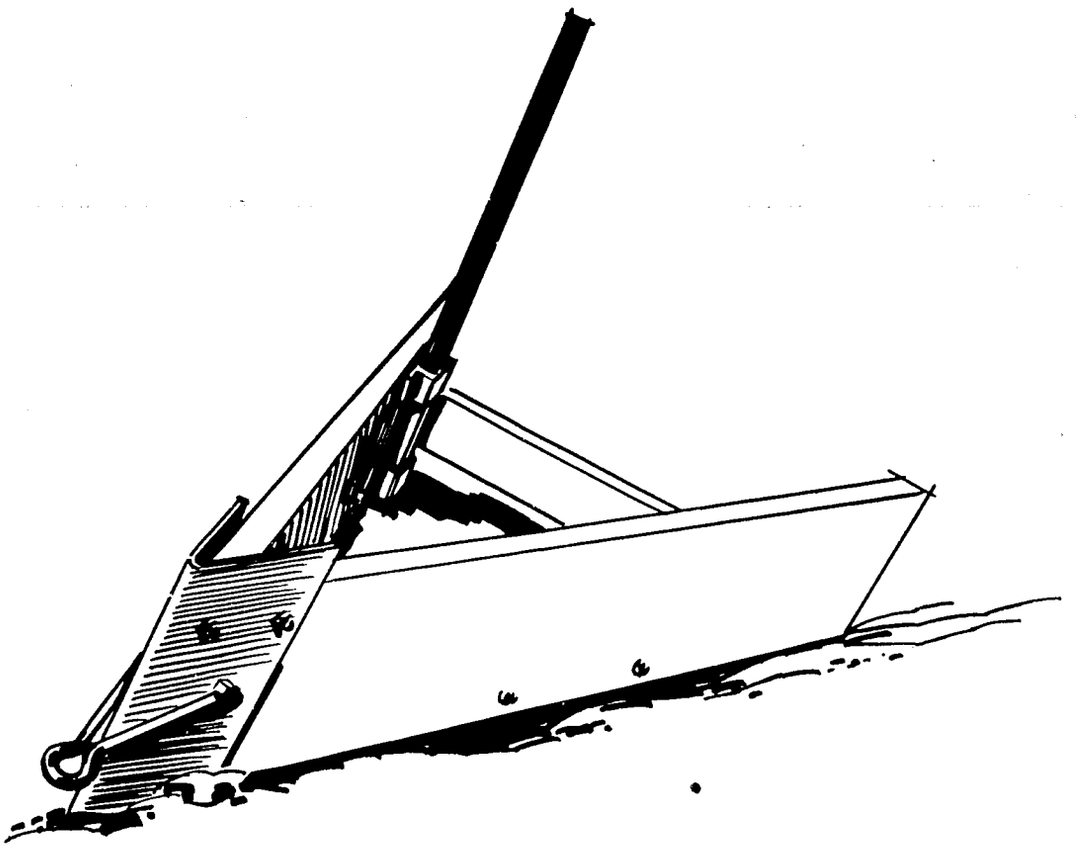

2. V-DRAG FOR CONSTRUCTION OF LEVEES OR BORDERS FOR BORDER IRRIGATION SYSTEMS

After the desired location has been selected for constructing a levee, or border, the plow may be used to plow down and back twice and throw the soil into the border line. The V-Drag can then be used to crowd the soil into a ridge.

When a border irrigation system is constructed in this manner it is necessary to smooth around the border by means of the Buck Scraper. If the hitch on the scraper is shortened on one side it will roll the dirt into the border (Refer to Figure 11).

The hitch on the V-Drag is the same for construction of a ditch or a border. Two horses, two oxen, or three horses are usually satisfactory.

Evaluation

The V-Drag has been successfully used in Turkey.

Material from...Contruction and Use of Small Equipment for Farm Irrigation, by Carl M. Forsberg, James D. Metzger and John C. Steele, USOM/Turkey in cooperation with Turkish Ministry of Agriculture

FOOD PROCESSING & PRESERVATION

PAKISTAN

44

MULTIPLE HITCHES

Abstract

Multiple hitches are necessary in adapting the proper power to the load and the job. Correctly made hitches enable each animal to do his share of the work and exert an even pull on a piece of equipment.

Tools and Materials

2-horse evener

1 oak plank, 4 cm x 10 cm x 1 meter
2 oak bars, 4 cm x 6 cm x 77 cm
4 strap iron, 10 mm x 4 cm x 22.5 cm
4 machine bolts with nuts and washers, 13 mm x 8 cm
2 carriage bolts with nuts and washers, 10 mm x 12 cm

3-horse evener

1 oak plank, 4 cm x 12 cm x 1.52 meters
1 oak bar, 4 cm x 6 cm x 77 cm
2 strap iron, 10 mm x 4 cm x 46.5 cm
2 strap iron, 10 mm x 4 cm x 34 cm
4 machine bolts with nuts and washers, 13 mm x 8 cm
2 carriage bolts with nuts and washers, 10 mm x 14 cm
plus material for <u>one</u> 2-horse evener

4-horse evener

1 oak plank, 4 cm x 16 cm x 1.96 meters
4 strap iron, 10 mm x 4 cm x 40 cm
4 machine bolts with nuts and washers, 13 mm x 8 cm
2 carriage bolts with nuts and washers, 10 mm x 18 cm
plus materials for <u>two</u> 2-horse eveners

6-horse evener

1 oak plank, 6 cm x 20 cm x 2.84 meters
4 strap iron, 10 mm x 5 cm x .45 cm
2 machine bolts with nuts and washers, 20 mm x 8 cm
2 machine bolts with nuts and washers, 20 mm x 10 cm
2 carriage bolts with nuts and washers, 10 mm x 22 cm
plus materials for <u>two</u> 3-horse eveners

Clevis

1 clevis stock, 20 mm x 70 cm
1 machine bolt with nut and washers, 20 mm x 12 cm
(one clevis is needed for each horse)

MULTIPLE HITCHES

1 of 2

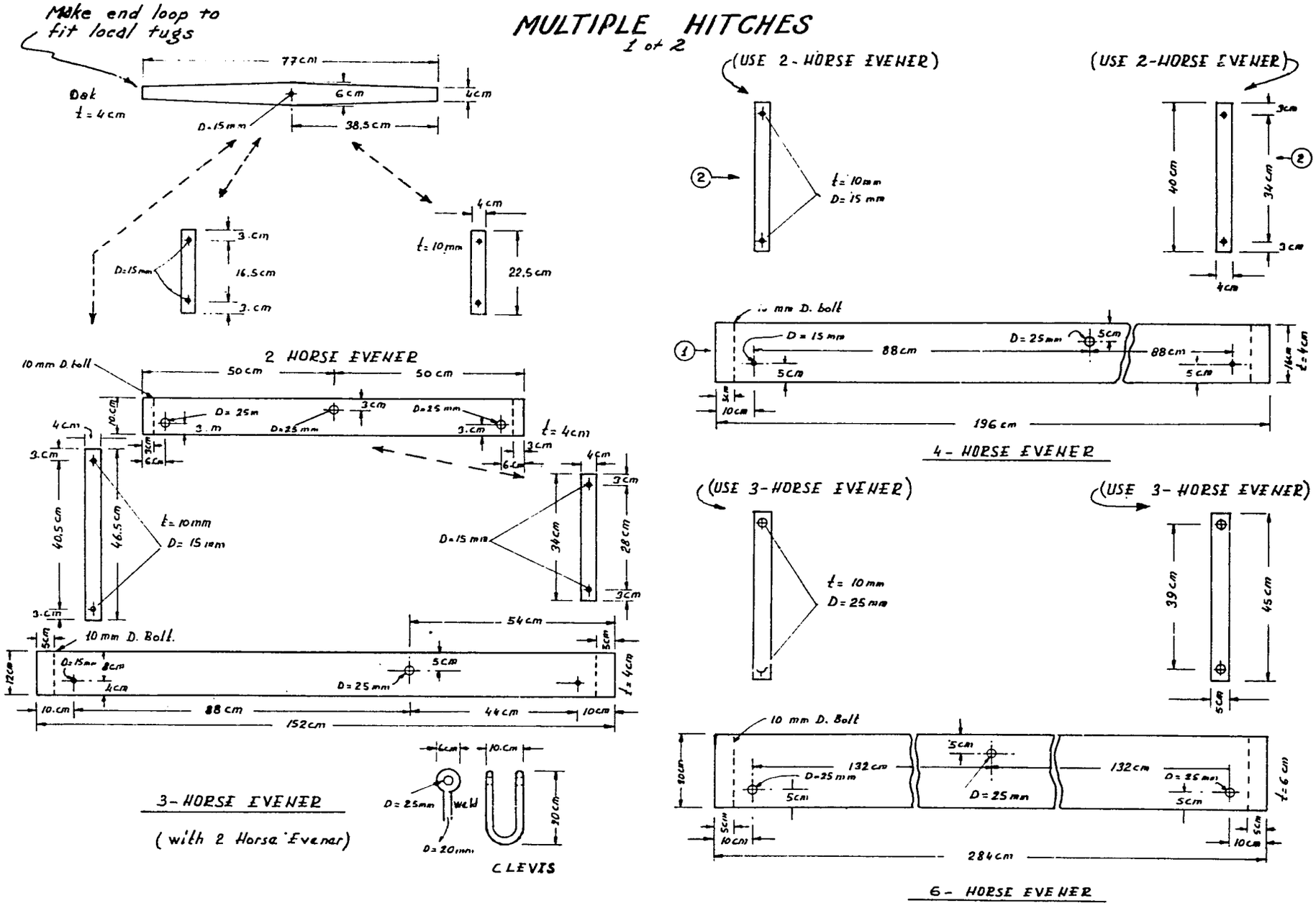

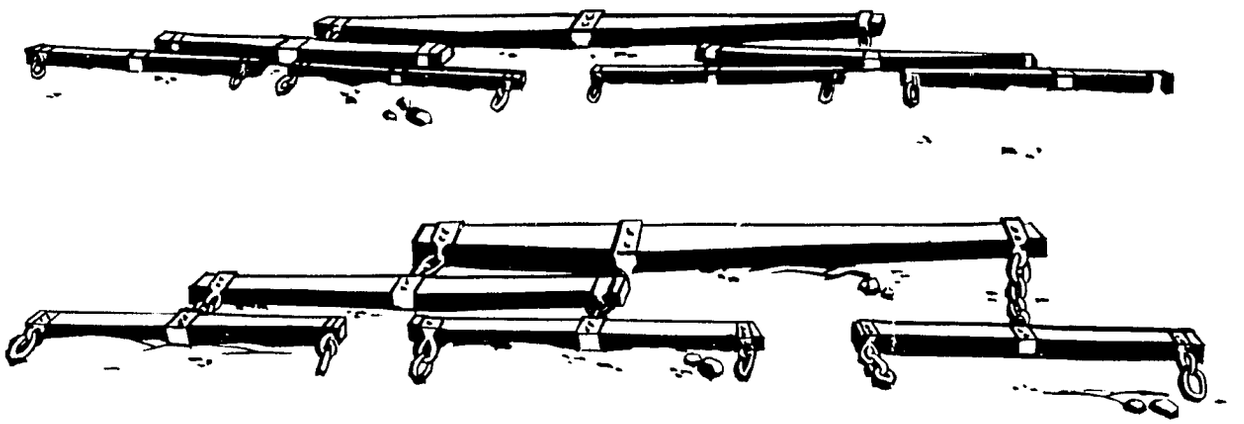

Details

Various combinations of hitches may be used, according to the job. The most common hitches are:

- double trees, or 2-horse evener
- 3-horse evener
- 4-horse evener
- 6-horse evener

The major parts of the hitches can be adapted for use with oxen.

Evaluation

Hitches of these types are widely used in Turkey and elsewhere.

Material from...Construction and Use of Small Equipment for Farm Irrigation, by Carl M. Forsberg, James D. Metzger and John C. Steele, USOM/Turkey in cooperation with Turkish Ministry of Agriculture

DESSICCANT DRYING FOR GRAIN, ETC.

Abstract

This describes the use of wood blocks to dry grain and other materials. The blocks can be used many times simply by drying in an oven.

Tools and Materials

Cedar or balsawoods...cedar wood absorbs water and is durable. Balsa will absorb more water but breaks easily. Other woods also absorb water.

Calcium chloride...use one-sixth of a liter of this cheap chemical in a little water.

A waterproof container that will not allow vapor to enter, should be used for holding the grain.

Coarse screen...1 inch by 1 inch.

Details

A steel drum or sheet-metal cabinet are good but a wooden chest can also be used if it has vapor stops as shown in Figures 1, 2 and 3.

The wooden blocks should be sawed so as to have the most end grain showing. A good size is 1 by 1 by ½ inch (3 by 3 by 3/4 cms). Treat the blocks as follows:

- dry in a 90 to 100 degree centigrade (194 to 212 degree fahrenheit) oven or double boiler to remove all moisture (see Figure 5).
- put blocks in the calcium chloride solution and cook four hours at a temperature slightly below the boiling point.
- leave blocks cool in this solution and remain there for 24 hours.
- put the blocks in the oven again and dry at same temperatures as above.
- when dry, wipe off any calcium chloride on the blocks before putting them in the grain.

48

The number of drying blocks should not be more than 10 percent of the space in the container.

The amount of dampness absorbed by the drying blocks may not dry the grain enough. The blocks are then removed from the grain and dried in the oven or over a stove.

Wooden blocks will not absorb water after three to five days and should be dried at that time. Continue re-drying the blocks and placing them in the grain until the blocks do not absorb any dampness. You can tell this by weighing the blocks after 3 or 4 days. If they than weigh the same as dry blocks, the grain is dry.

The small blocks can be separated easily from the grain by use of a coarse screen. The blocks must be well mixed with the grain so that the grain dries evenly in the shortest time possible. Small containers, such as shown in Figure 1, help when different grains or materials are being dried and make it easier to remove and put back the small blocks. These are kept in a large water-vapor tight box (Figures 2 and 3).

Evaluation

Blocks can absorb water up to one-fourth of their weight. Grain dried by this method for 12 days resulted in a decrease of moistrue from 17 percent to about 10 percent, which resists mold and insects. The blocks were removed and dried on the fourth and eighth days.

Material from... Grain, Drying and Storage for Warm Humid Climates, by Norton D. Ives, Inter-American Institute for Agricultural Sciences

49

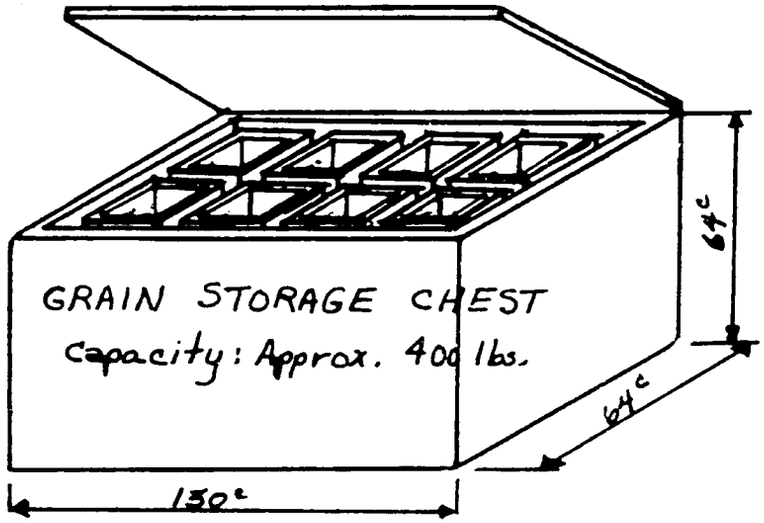

Fig. 2

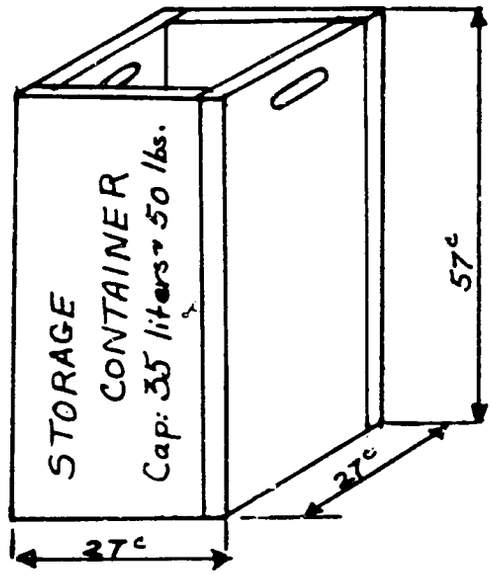

Fig. 1

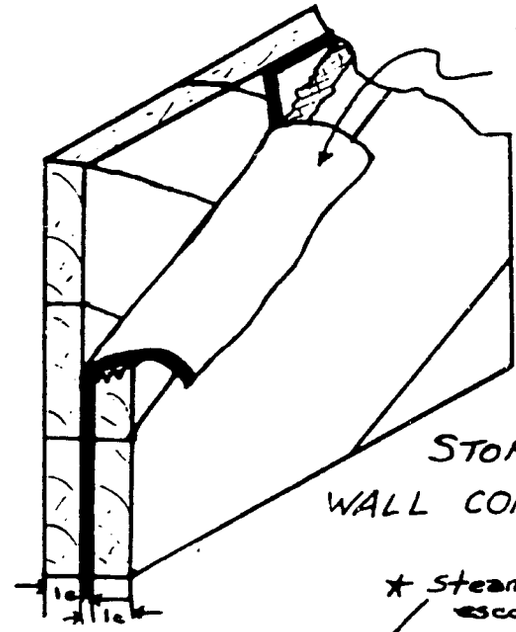

Fig. 3

STORAGE CHEST WALL CONSTRUCTION

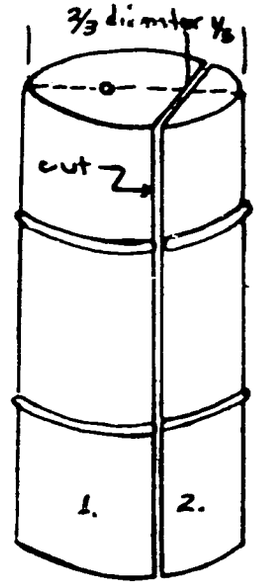

Invert Section 2. in Section 1. Attach cut edges together.

* Cut hole for steam escape pipe.

Fig. 4.

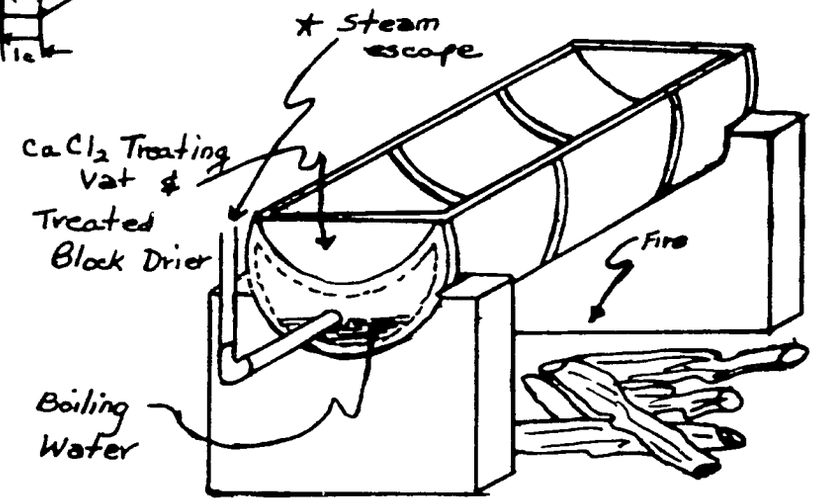

WATER OVEN FOR TREATING & DRYING WOOD BLOCKS. MADE FROM ONE STEEL DRUM.

Fig. 5.

WINTER STORAGE OF VEGETABLES

Abstract

Many farmers in every country have good ways to store vegetables. The information given here is general and may not apply in some countries.

Details

It is a good plan to plant some vegetables like tomatoes late in the season so that they may be picked before frost. Picked when white or turning red, they will ripen in the house. For longer periods, they may be picked and packed in a box of sawdust, then the boxes are opened and the tomatoes placed in a warm room for ripening, when desired for eating.

All kinds of dry beans may be kept for winter use by picking the pods as soon as they are mature and spreading them in a warm, dry place until dry. The beans are then shelled and stored in bags and hung in a cool, dry, ventilated place until needed. Cellars are too damp for this storage. A few drops of carbon bisulphide in each container will protect them against weevils. This chemical must be kept away from fire, but will not change the flavor of the beans. Dry lima beans, soy beans and peas may be stored the same way.

Successful storage of most fruits and vegetables is not difficult, if the following facts are known:

- different vegetables and fruits need different storage conditions and methods
- anything showing decay or injury should not be stored
- vegetables and fruits will dry out unless the storage place is damp and the temperature low without freezing.
- ventilation not only changes air and removes odors but helps maintain desireable temperature and humidity. Windows and ventilators should be kept open when temperature is not freezing.
- walls and ceilings should be insulated so moisture does not form and drop on stored foods.

Root crops such as beets, carrots, celery, kohlrabi, turnips, winter radish and horse radish are not stored until late. When the soil is dry, the roots are pulled and topped. Conical pits make excellent storage places for root crops. Turnips may be left in the garden until later than most crops but are hurt by alternate thawing and freezing. Parsnips may be left in the ground until needed as freezing does not hurt them. But, put a few in underground storage for use when the ground is frozen.

51

Sweet potatoes may be stored in pits or outdoor storage cellars but some will decay. A warm, moderately dry place is best for storage of sweet potatoes. A small supply may be placed near a chimney in the ceiling or other place, where the temperature will stay about 55 to 60 degrees fahrenheit.

Late maturing kinds of pumpkins and squashes may be kept in rows until late winter, or on shelves if a temperature of 50 to 60 degrees fahrenheit is maintained.

Evaluation

This information has been obtained from many countries but does not necessarily apply to your country or village.

Material from...Home Storage of Vegetables and Fruit, in Farmers Bulletin no. 1939, U. S. Department of Agriculture.

67

OUTDOOR STORAGE PITS

Abstract

These storage pits are simple to build and can keep vegetables and fruits fresh for many weeks during winter months. Families are thus able to eat fresh vegetables months later than usual.

Details

Cone-shaped outdoor pits are often used for storing potatoes, carrots, beets, turnips, salsify, parsnips and cabbage. They are also used, at times, for winter apples and peas. The conical pit can be built on the surface of the ground (Figure 1) or in a pit six to eight inches deep in a well-drained place. The making of the pit is as follows:

> A layer of straw, leaves or other similiar material is spread on the ground and the food stacked on the straw in a conical pile, as shown. More straw is used to cover the vegetables after they are stacked and the entire pile is then covered with 2 to 3 inches of soil, firmly packed with the back of a shovel to make it water proof. More soil may be needed as winter approaches. A shallow drainage ditch should be dug around the pit to carry away water.

The amount of ventilation needed for the storage pit will depend on the size of the pit. In small pits with only a few bushels of vegetables, enough air will enter if only the straw between the vegetables and the soil is allowed to extend through the soil at the top of the pile. This should be covered with a board or piece of metal held in place by a stone to protect the vegetables from rain.

In larger pits, place 2 or 3 pieces of rough board or stakes up through the center of the vegetables so that a flue is formed between them. This is capped by a trough formed by 2 pieces of board nailed together at right angles.

It is difficult to get vegetables out of this type of pit in cold weather and when the pit is opened it is best to remove all of the vegetables at that time. For these reasons, it is better sometimes to build several small pits rather than one big pit and to place several different types of vegetables in one pit. Then, when you open a pit you will have a variety of vegetables. Each type of vegetable can be separated from the other by straw or leaves.

Another type of pit is made simply with an open barrel covered with layers of straw and earth. All pits should be made in different locations each year as old pits may be contaminated with decayed vegetables or straw.

A good way to store cabbage, collards and other greens of that type is in a pit made of stakes and poles covered with straw. See Figure 2. Enough 8 to 10 feet long trenches are dug to hold the number of cabbages to be stored. A frame is built around this bed after the trenches have been filled with the vegetables and earth packed around the roots. The frame should be about 3 feet high. Earth is banked around the frame and poles placed across the top to hold the covering of straw, hay or corn fodder.

When using the cabbages during the winter, cut the heads off with a knife and leave the roots in the ground. They will sprout in the spring and supply the family with greens for eating. This type of storage costs little or nothing and gives good results.

Cabbages may also be stored in a long pit. It must be well-drained. The soil covering the cabbage does not have to be as thick as for vegetables that are more easily hurt by frost. In this method, the cabbages are placed with the roots up and covered with soil. See Figure 3.

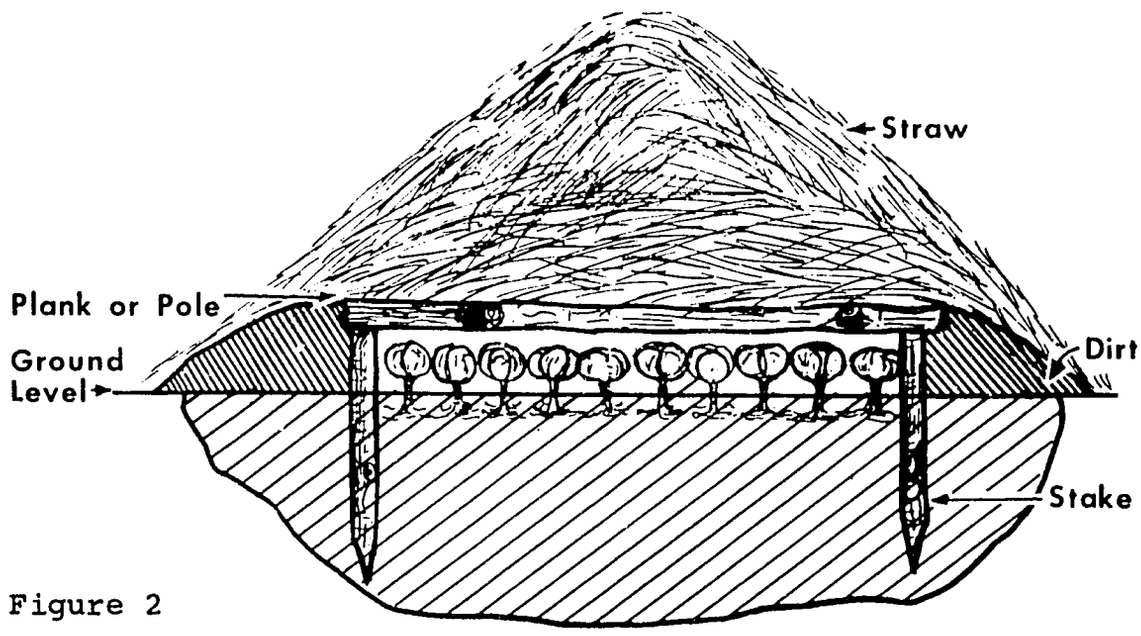

Figure 2

Cabbage storage pit.

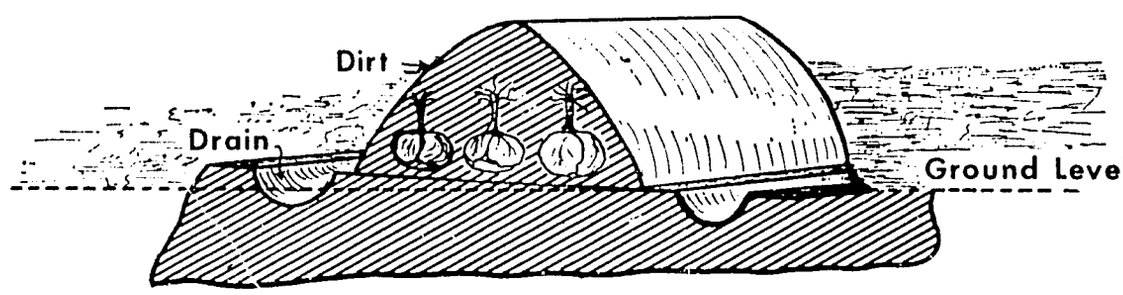

Cabbage storage above ground.

54

Evaluation

These simple outdoor storage pits have been used successfully in Iran and other countries where winters are cold.

Material from....Home Making Around the World, U.S. Department of State, Agency for International Development

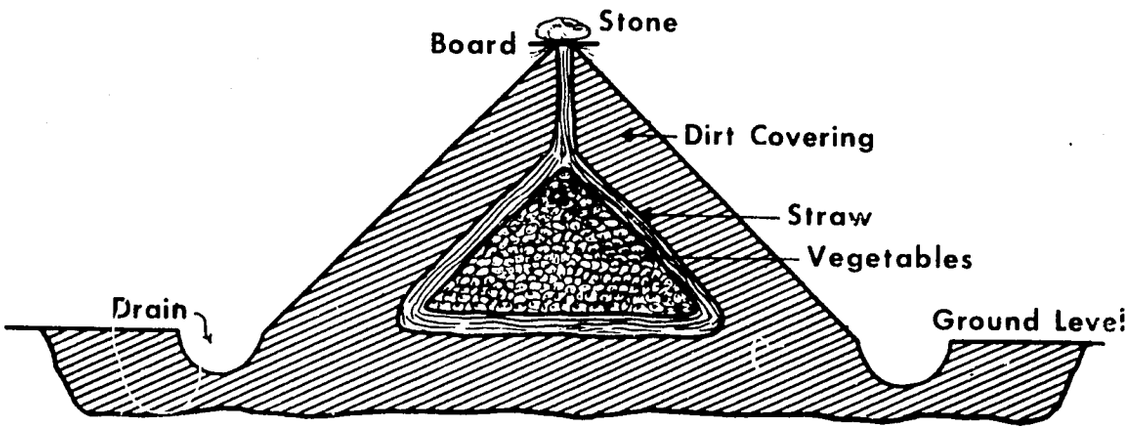

Outdoor storage pit.

55

OUTDOOR STORAGE CELLAR

Abstract

This type of outdoor cellar is good for storing many vegetables and fruits in a large quantity. It requires more work and materials than underground storage pits but can be used when the ground is frozen.

Materials

Wooden boards and posts
Metal hinges for the door
Nails and, if available, creosote or other waterproofing material

Details

A pit should be dug as large as desired and about five feet deep . The soil removed to make the hole should be stored to one side and nearby, as it will be needed for covering the roof and banking the sides for protection against the weather and for drainage.

Place two rows of posts in the bottom of the pit near the side walls. The tops of these posts should be of the same height above the bottom of the pit.

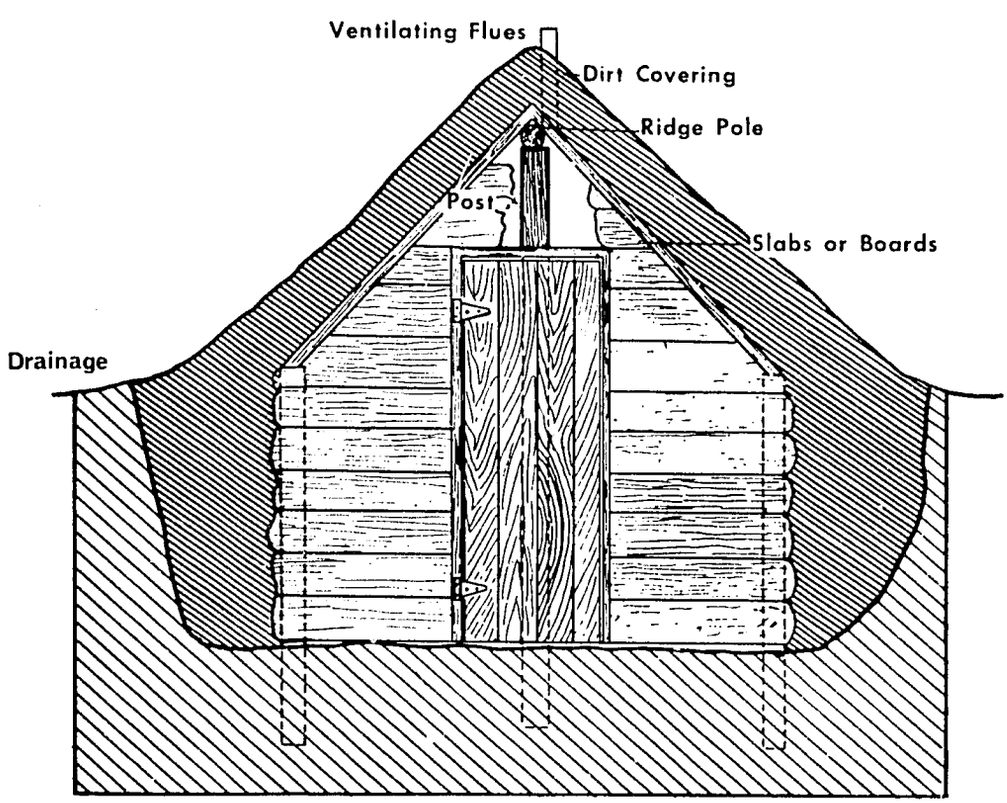

56

Next, place a row of posts halfway between the two side rows of posts. These posts should be about five feet higher than the side rows and of even height. Put a ridge pole on top of the center row of posts and poles along the tops of the two side rows. Nail a roof of wooden boards on these poles so as to cover the top of the pit.

Cover one end of the structure with boards and the other end with boards and a door, as shown in the drawing. Then cover the roof, sides, and closed end with dirt. Use more soil in very cold climates than in moderately cold weather areas.

Important...be sure that water drains away from the storage pit and that a pipe extends up from the storage area, through the dirt, so that the storage area is ventilated.

Evaluation

This type of cellar is low in cost, but is short-lived compared to above-ground structures, as the wood can decay. If creosote is available, paint the wood with it to slow decay.

Material from...Home Making Around the World, U. S. Department of State, Agency for International Development

CORN SILAGE

ABSTRACT

By processing the corn plant, with or without the ear, before it becomes excessively dry and storing this feed in an excavated trench, ruminants (multi-stomach animals such as cows) may be well fed during seasons when fresh forage is unavailable.

TOOLS AND MATERIALS

Tools to excavate the trench silo
Some method of cutting up the corn
A tractor, work animal or people to compact the silage

DETAILS

For the most nutritious corn silage (ensilage) the corn should be processed when the kernels in the ear are no longer milky and the stalk (stem) still retains some moisture. Stalks that are well dried have insufficient moisture for satisfactory ensiling in the silo. The stalks, leaves and ear if used, must be cut into small pieces 1 to 2 inches (2 to 4 cm.) long, preferably shorter or longer pieces providing the stalk is split or lacerated. Corn processed for silage after the ears have been harvested is called stover silage and is lower in food energy. Because of the dry conditions of the stalks, it most likely may be necessary to add water as the material is placed in the silo for proper packing.

Good silage may be made in simple trench silos. Because of spoilage due to exposure to air and the fact that the earth walls of the trench may tend to fall in some after several seasons of use, it is better to make few large trench silos than many small ones, if possible. The sketches show how to build a trench silo.

Even distribution and packing when filling the silo are very important. If the silo is large and there may be a long delay during filling (days or weeks), fill only the rear first. Pack the silage by walking, using a work animal or a suitable motor vehicle if available. This reduces air space within the silo and helps eliminate spoilage of the silage.

To feed silage from the trench silo, start from the front and work back. In this way, only that material to be fed is disturbed, reducing spoilage and waste. For minimum spoilage, at least one foot of length of the silo should be fed in five days.

TRENCH SILO CAPACITIES

Dimensions in feet			Approximate Pounds of Silage Per Foot of Length
Top Width	Bottom Width	Depth	
8	6	6	1680
10	7	6	2040
12	8	6	2400
8	6	7	1960
10	7	7	2380
12	8	7	2800
10	6	8	2560
12	8	8	3200
14	10	8	3840

EVALUATION

If trench silos are properly made, in some climates they are a very successful and inexpensive means to store ensilage.

Material From - Marvin D. Van Peursem
VITA Participant

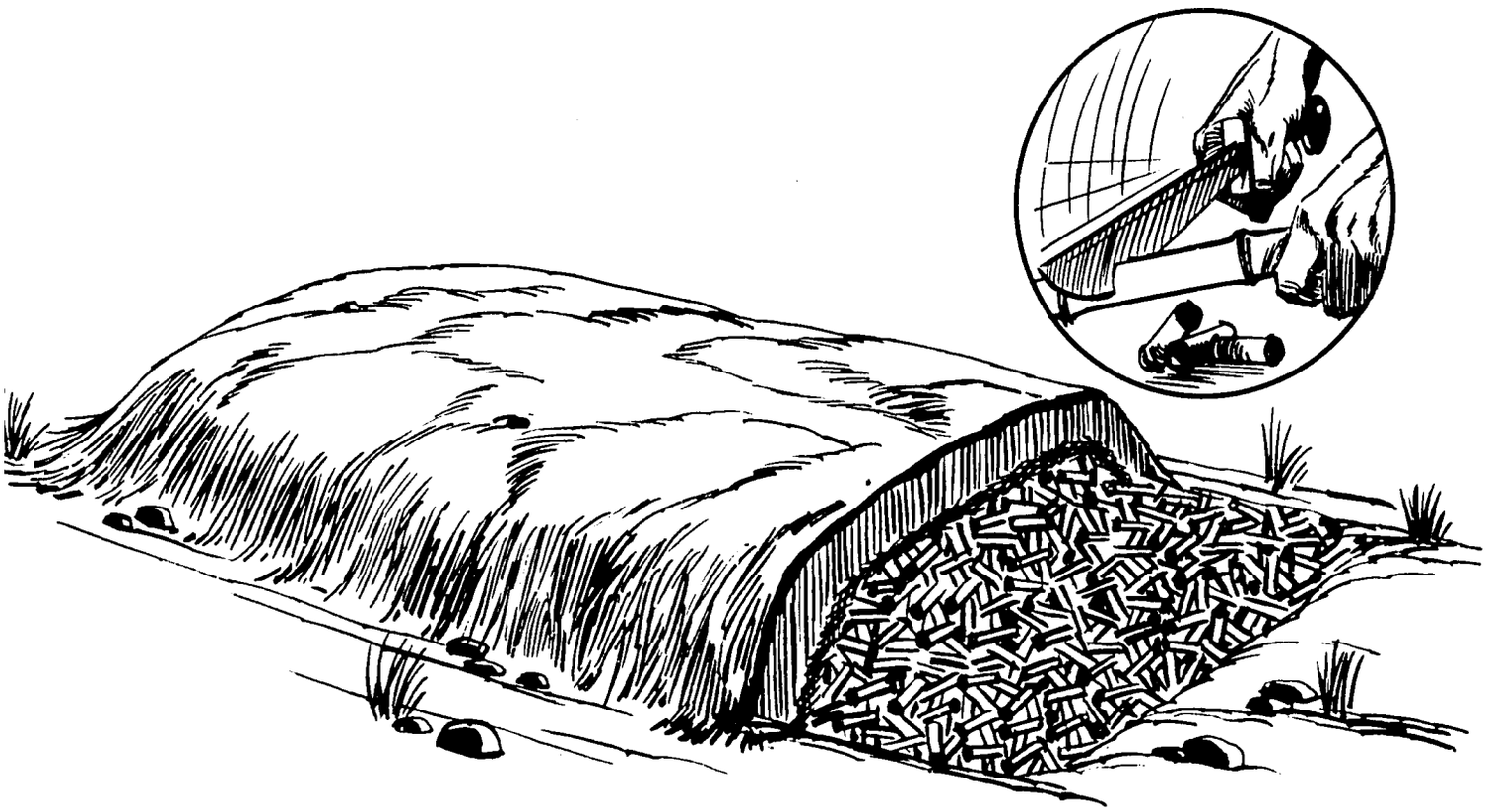

59

TRENCH SILO

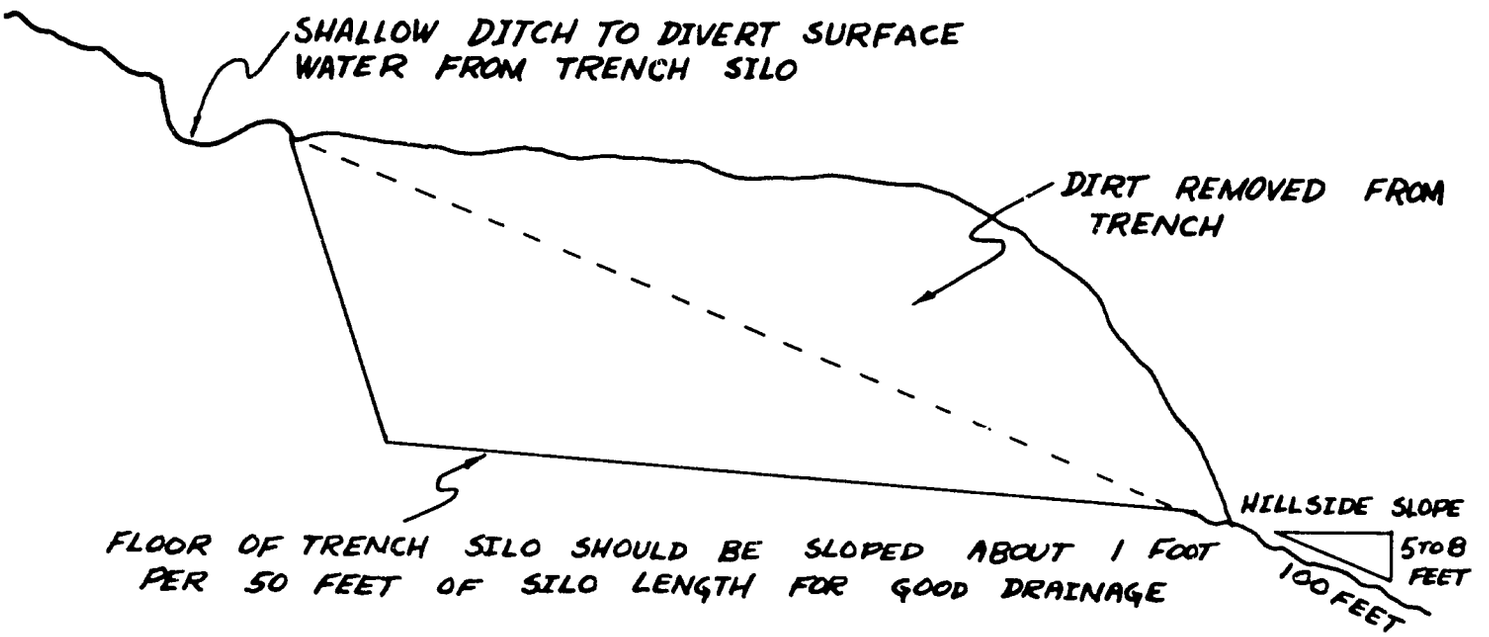

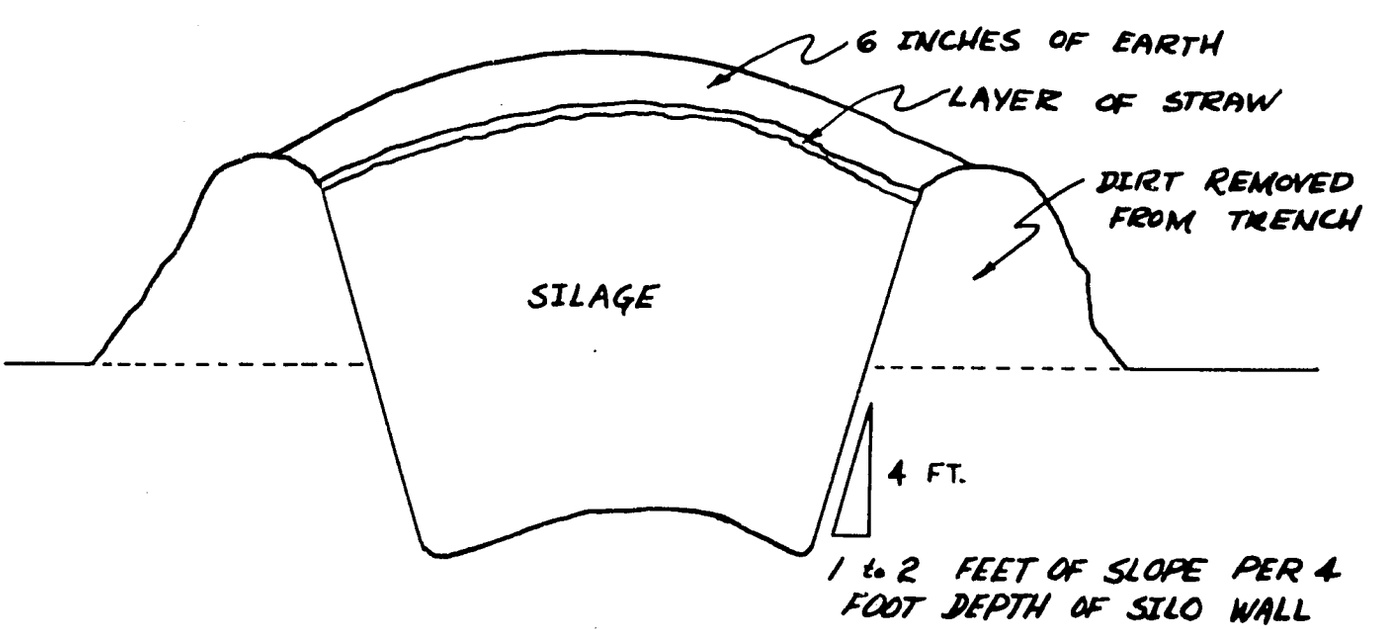

FLOOR CROWNED FOR BETTER DRAINAGE

MVP 6-10-63

60

HOUSING AND CONSTRUCTION

GUATEMALA

SPLITTING BAMBOO

Abstract

In order for bamboo to be useful for a variety of construction, careful splitting of culms is essential.

Tools and Materials

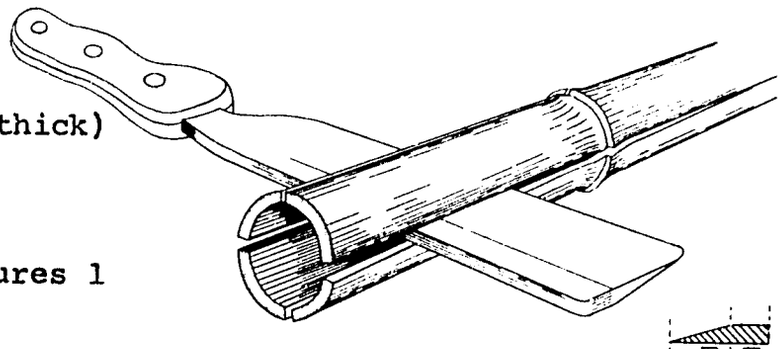

Iron or hardwood bars (1" thick)
Ax
Steel wedges
Wooden posts
Splitting knives - see Figures 1

Details

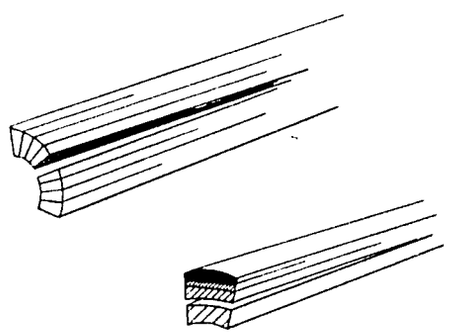

Several devices may be used for splitting culms. A splitting knife with a short handle and broad blade may be used for splitting small culms to make withes for weaving and lashing. A strip of bamboo held on the blade may add to the blade's thickness and speed up work.

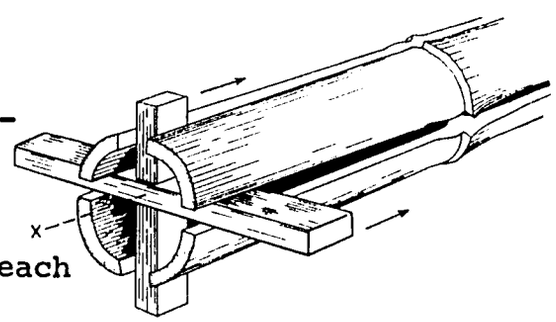

With a splitting knife make four cuts in upper end of culm. These should be an equal distance apart. See Figure 1. Complete splitting of bamboo culm by driving a hardwood cross along the cuts to the other end. See Figure 2. This will give you four strips of bamboo. Cut each strip in half with a long-handled knife. See Figures 3 and 4. Then remove the soft, pithy center so that the hard, outer strip remains for use.

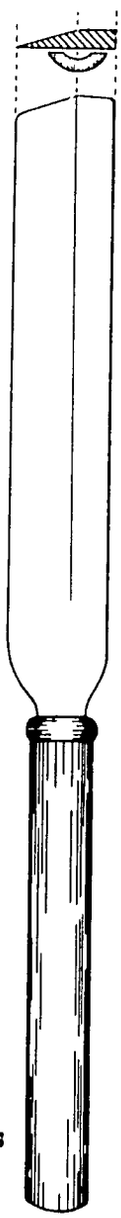

To split heavy culms, build a cross of iron or hardwood bars about 1 inch thick, place the cross on firmly set posts about four inches thick and three feet high. At the top end of the culm make two pairs of breaches, with an ax, at right angles to each other. Hold the breaches open with steel wedges until the culm is on the cross as shown in figure 6. Push and pull the culm until the cross completes splitting all of the culm. A simple steel wedge mounted on a post or block of wood can be used for splitting the culms after they are split into four parts. See figure 7. Solidly mounted and paired wedges, with the points slightly closer together than the back ends, can be used to split pieces with parallel sides. See figure 8.

Evaluation

Splitting culms properly is an important step in preparing bamboos for construction material. These methods have been proven effective in many countries.

Material from - United States Department of Agriculture, Foreign Agricultural Service, BAMBOO AS A BUILDING MATERIAL, F. A. McClure, May 1953.

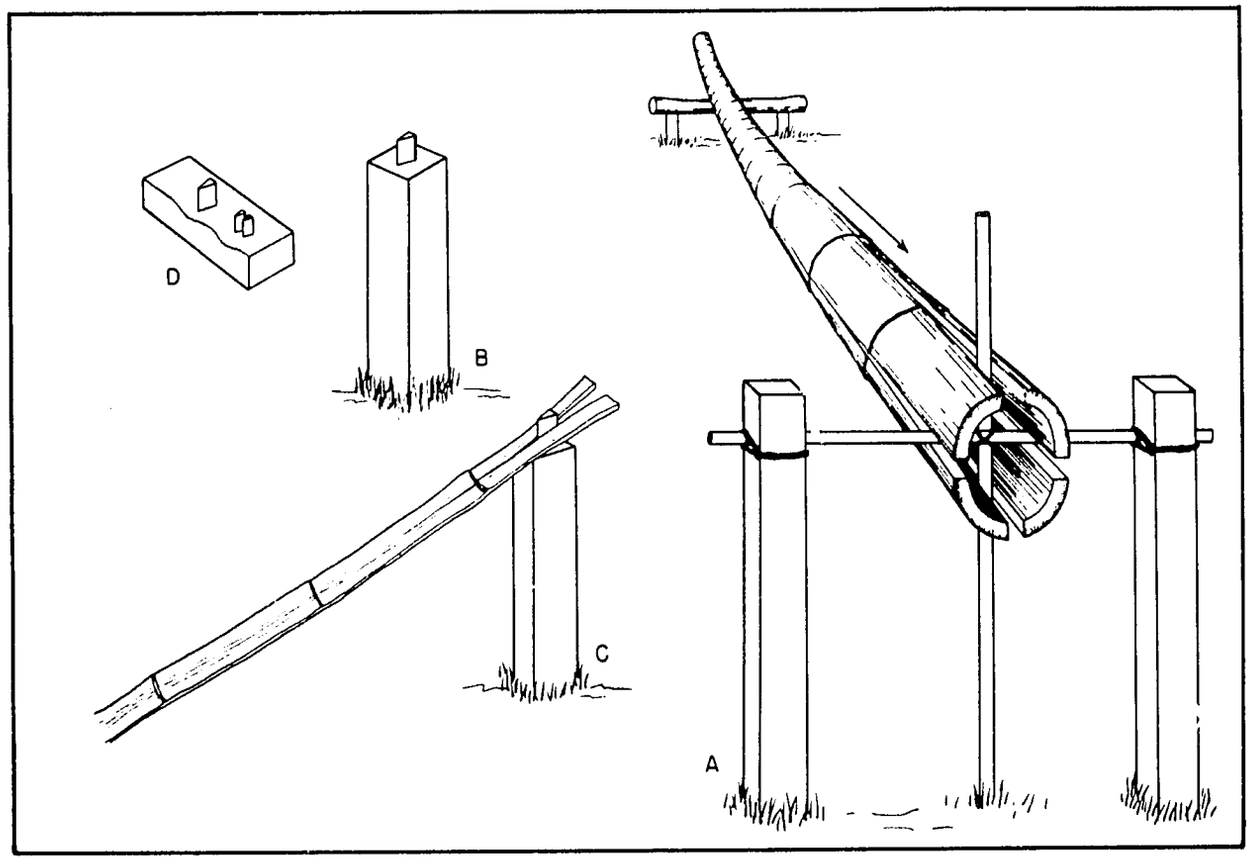

BAMBOO JOINTS

Abstract

Bamboo can be joined to make buildings and implements, using a number of methods.

Tools and Materials

Bamboo
Lashing material -- cordage or wire
Machete, hacksaw, knife, drill and other bamboo working tools

Details

Bamboo is useful for heavy construction, since it is strong for its weight. This is because bamboo is hollow with the strongest fibres outside, where they give the most strength and make a hard attractive surface. Bamboo has solid diaphragms across each joint or node, which prevents buckling and makes bamboo able to bend considerably before breaking. Any cut such as a notch or mortice greatly reduces the strength of bamboo and mortice and tenon joints should not be used when building with bamboo. However, a notch or saddle-like cut can be made at the upper end of posts used to hold cross pieces that rest upon them. (Figures 1, C and D)

The culms or stems of bamboo will not take nails without splitting, so bamboo parts are usually lashed together. The withes for lashing are usually split from bamboo and sometimes from rattan. Sometimes, all local bamboo yields brittle withes, so lashing must be done with bark, vines or galvanized iron wire.

In making bends with bamboo, such as the 'Double Butt Bent Joint' of Figure 2, you can sometimes prevent splitting by heating the bamboo and bending it while hot.

Evaluation

Usually, local artisans have already worked out practical methods for making joints and know the best species of bamboo.

Material from...U.S. Department of Agriculture, Foreign Agricultural Service, BAMBOO AS A BUILDING MATERIAL, F. A. McClure, 1953

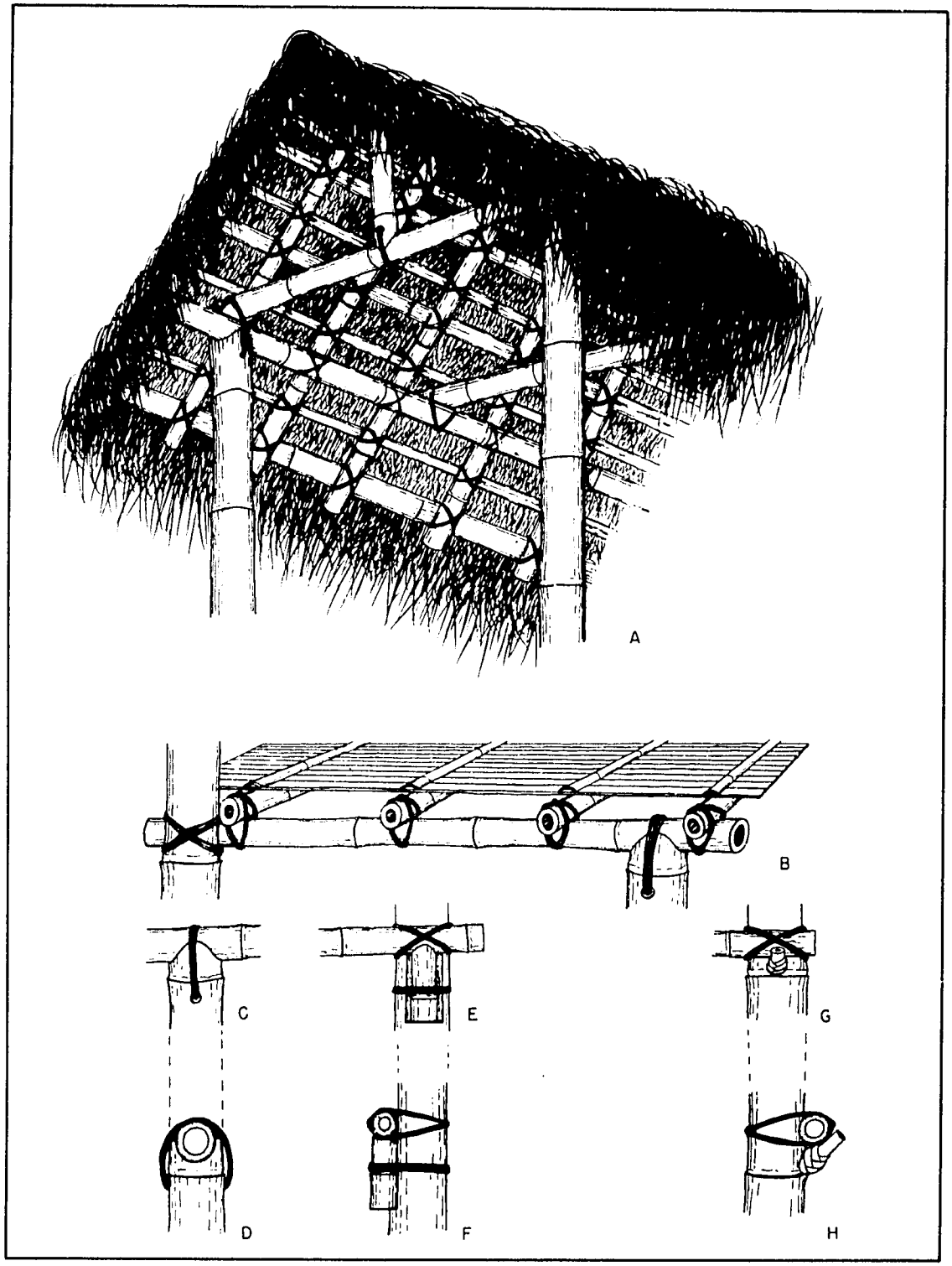

Figure 6.--Details of bamboo construction: A, fitting and binding culms at joints in roof and frame; B, fitting and securing bamboo boards of floor; C and D, saddle joint; E and F, use of inset block to support horizontal load-bearing elements; G and H, use of stump of branch at node of post to support horizontal load-bearing elements.

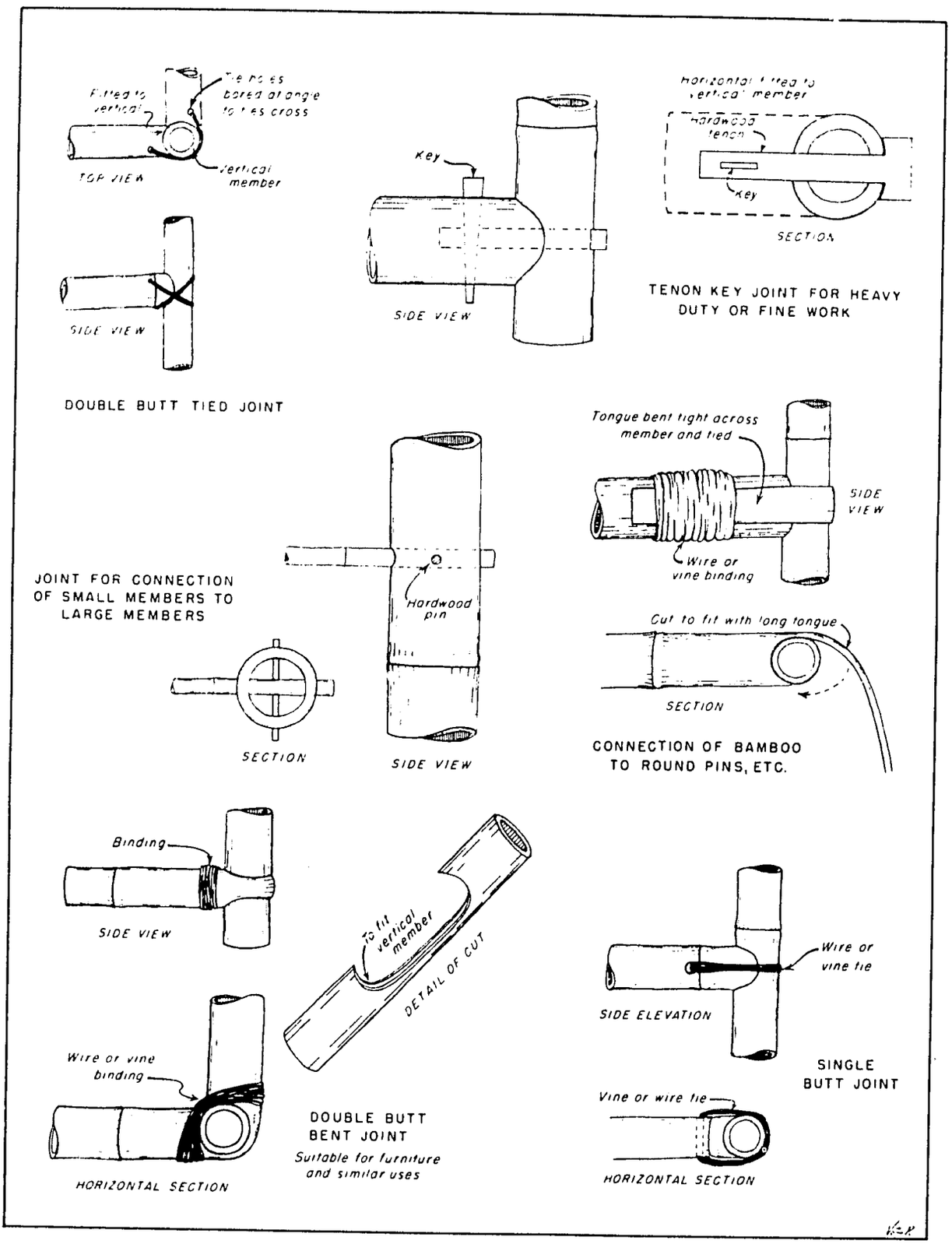

Figure 7.--Joints used in building with bamboo.

66

BAMBOO PRESERVATION

Abstract

The use of DDT and proper curing will make bamboo much more resistant to insect attack.

Tools and Materials

Machete for felling and trimming bamboo culms
Hacksaw for felling and trimming bamboo culms
Five percent mixture of DDT and Talc

Details

Bamboos that are moist and starchy are usually attacked by insects and rot fungi. It is best to dry them for 4-8 weeks after cutting, before building with them. Bamboo should not be cut before it is mature. This is usually the end of the third season. The Federal Experiment Station in Puerto Rico has found that clump-curing helps reduce insect attack and fungi. These are the steps...

- cut the bamboo off at the base but keep it upright in the clump.

- dust the fresh-cut lower end of the culm at once by patting it with a dusting bag filled with the 5% mixture of DDT and talc.

- raise each culm off the ground to prevent staining and rotting of the wood by fungi. Do this by thrusting a stick into the lower end or placing a block of stone, brick or wood under it.

- culms should remain in this position 4 to 8 weeks, according to if the weather is dry or wet. The culm should be as dry as possible before being taken near buildings, where wood-eating insects usually live. Rain will stain the culms when they become dry. Thus, they should be taken down and trimmed when dry as conditions will permit. All cut surfaces should be immediately dusted with 5% mixture (1 to 20) of DDT powder and talc. Finish the seasoning in a well-aired shelter not in the open where it is exposed to rain and dew.

This method should prevent damage by wood-eating insects while the culm is drying. During long periods of storage, it is recommended that the stacks and storage shelves be sprayed every 6 months with 5% DDT mixed in water or light oil. Local conditions may shorten or lengthen the time between such spraying.

Bamboo culms are best protected, in storage and use, when protected against rain in a well-ventilated place where they do not touch the ground.

Evaluation

Tests were carried out at Mayaguez, Puerto Rico and found to be very effective.

Material from...U. S. Department of Agriculture,
Foreign Agricultural Service,
BAMBOO AS A BUILDING MATERIAL,
by F. A. McClure, May, 1953

62

BAMBOO BOARD

Abstract

Bamboo culms are split and flattened for use as sheathing, walls, or flooring.

Tools and Materials

Machette
Ax - lightweight, narrow but thick, strongly wedge-shaped bit preferred. A similar small hand ax is useful for making little boards.
Spud - a long handle with a broad blade set at an angle to work parallel to the surface of the board.
Adz - standard design, best quality steel
Large Bamboo culms, with the thick-walled basal part removed.

Details

All the above tools are not necessary, but speed up work where considerable production is involved.

Figure 2 shows how a well greased ax is used to split each node in several places. Then, with one long split, the culm is spread wide open. Figure 3 shows the final step in making board, the removing of pith at the joints with machete, adz or spud. The board can be stored as shown in Figure 4.

Evaluation

Making bamboo board is a well developed trade in Colombia and Ecuador.

Material from - United States Department of Agriculture, Foreign Agricultural Service, BAMBOO AS A BUILDING MATERIAL, F. A. McClure, May 1953

Figure 2.--An ax with a well-greased bit is used in Ecuador for making bamboo boards. Each node is split in several places; then with one long split, the culm is spread wide open. Not used for boards is the thick-walled basal part of the culm.

Figure 3.--Final step in making a bamboo board--removing diaphragm fragments from the newly opened culm. It may be done with a machete, as here, or with an adze or a long-handled, shovellike curved spud.

Figure 4.--Bamboo boards stand ready for use. The making of these boards is a well-developed trade in both Ecuador and Colombia; and the finished product might well become an export item.

BAMBOO WALLS, PARTITIONS AND CEILINGS

Abstract

Bamboo buildings can be built to meet different needs in strength, protection against rain and wind, light and ventilation.

Tools and Materials

Local bamboos
Bamboo working tools such as machete, hacksaw, chisel, drill
Lashing material...wire or cordage
Nails, plaster or stucco, barbed wire

Details

Bamboo may be used in its natural form or split along its length. It can be used upright, slanted or crosswise. It will dry quicker after rain and be more durable, when upright.

Its use in walls differs according to countries. Latin America nails or lashes bamboo strips or thin bamboo culms, crosswise and close to each other, to both sides of hardwood or bamboo uprights. The spaces between the strips or culms are filled with mud and stones so that the strips are nearly covered.

In Peru, flexible strips of bamboo are woven together and a mud plaster placed on one or both sides.

An attractive but less strong wall may be built by stretching bamboo boards crosswise as a base for plaster or stucco. Barbed wire can be nailed to the surface to strengthen the stucco. This is very attractive when made white by painting with lime or cement.

Partitions are much lighter and weaker, often no more than a matting woven from thin strips of bamboo split from the culm. These are held in place by a light framework of bamboo poles. Thin-walled culms and tough wood bamboos are mostly used. The bamboo partitions or walls are often used on the outer side of houses and as a finish on ceilings or walls.

Ceilings can be built with small, unsplit culms placed close together or by forming a lattice of lathlike strips split from larger culms. A space should be provided for escape of smoke from kitchen fires.

Evaluation

Bamboos in many sizes, shapes and forms are widely used for building in many parts of the world.

Material from...U.S. Dept.of Agriculture
Foreign Agriculture Service
BAMBOO AS A BUILDING MATERIAL
F. A. McClure, May, 1953

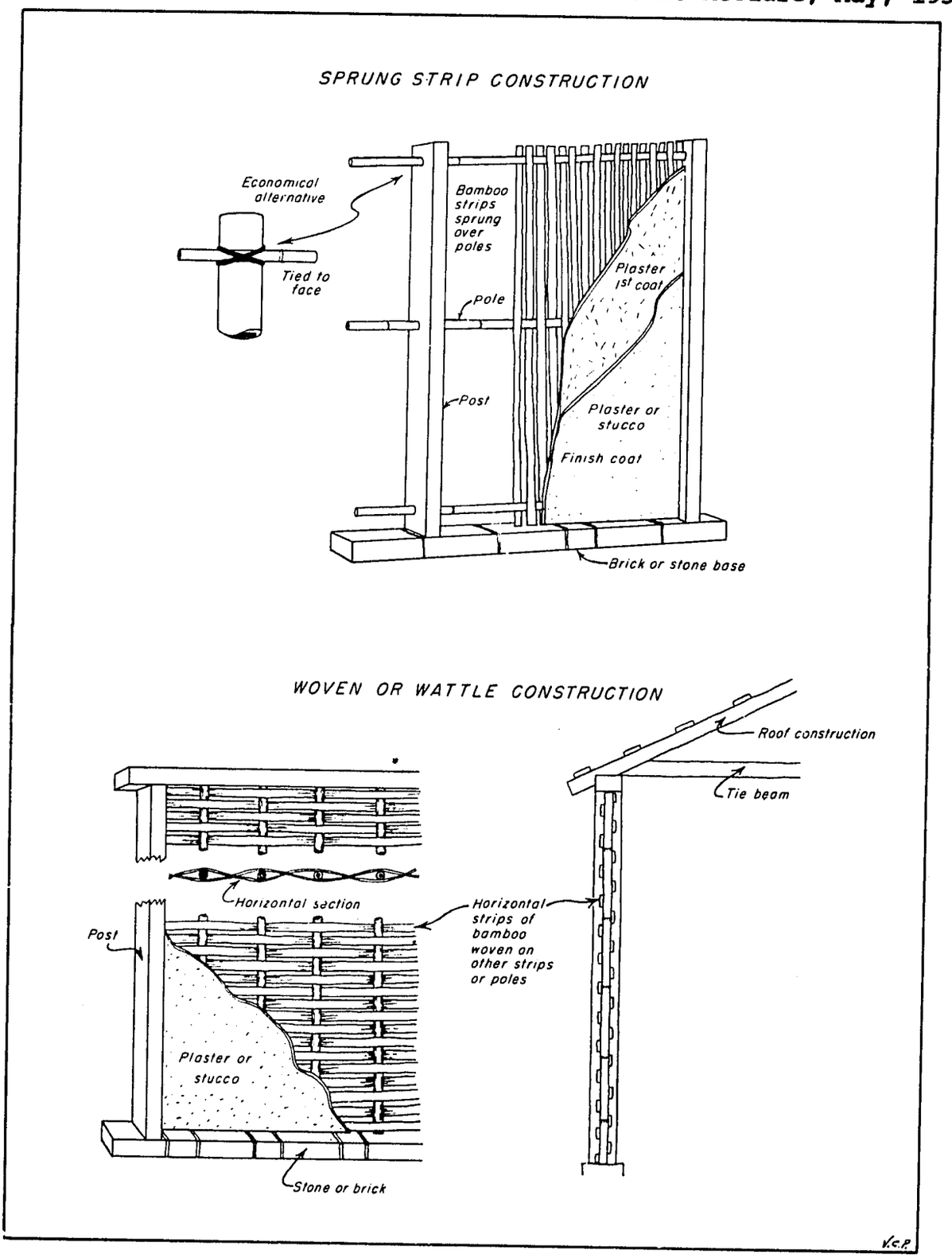

Figure 13.-- Types of wall construction used with bamboo.

POLE FRAME CONSTRUCTION FOR
FARM AND UTILITY BUILDINGS

Abstract

A utility building of pole-frame construction may be built at half the cost of usual construction methods, often by the builder using readily available material and tools. This method of building can be used for cattle shelters, dairy barns, shelters over open-trench silos, etc. and is very economical.

Tools and Materials

Carpentry tools, nails, etc.
Creosote or other waterproofing compound for wood, if available
Concrete, if the soil is wet clay
Poles...five or six inch diameter at top
Other wood as required

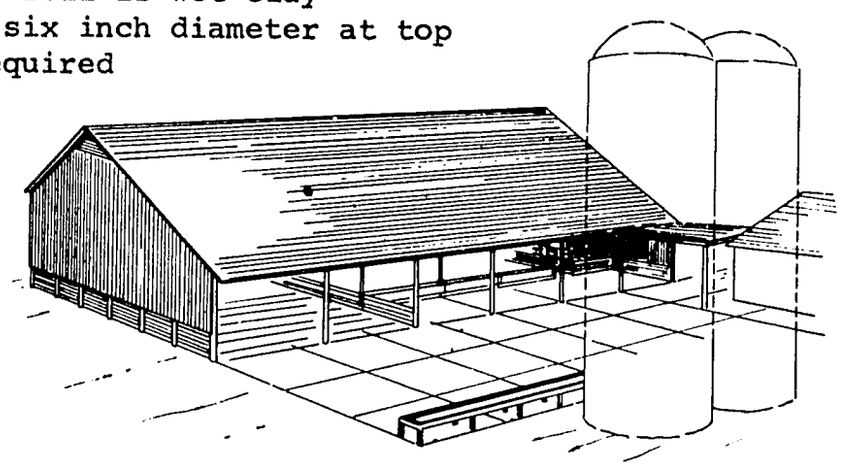

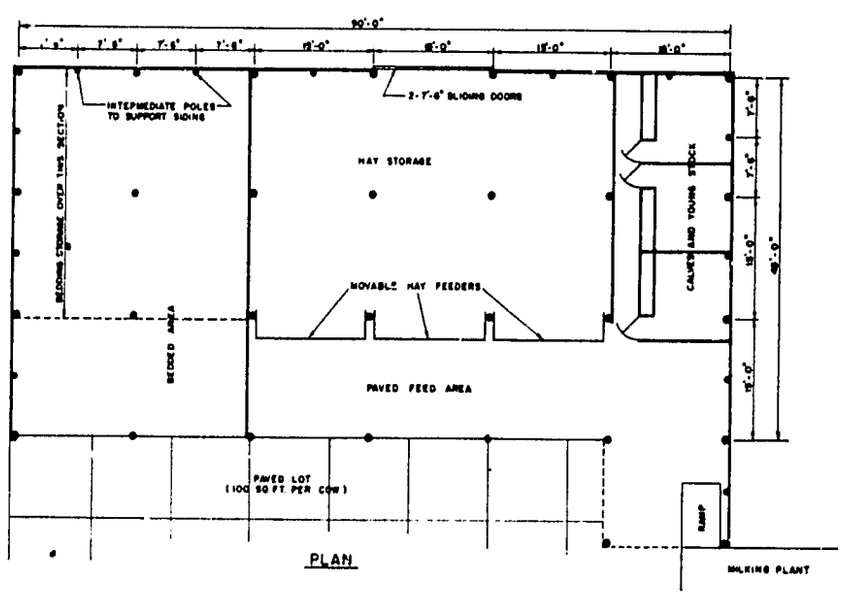

Fig. 3. A 45-foot Loose-Housing Pole-Type Building. Open front combination hay storage and loafing shed.

74

Details

A pole-frame building should be located on nearly-level, well-drained ground. If it is to be used as a machine shelter or loafing shed for animals, it should be located so the open side faces the sun and is protected from the prevailing wind.

Set up batter boards and string lines to mark the outline of the building, as shown in Figure 5. Square the corners by laying out any right triangle whose sides are in the proportions of 3, 4 and 5. This can be 6 feet on one side, 8 feet on the other and 10 feet on the long side of the triangle, as in corner A of Figure 5, or any multiple of these measurements.

Poles are spaced 12 to 15 feet apart. Measure from the outside of each corner pole to the center of the next pole, as shown in Figure 5. Each of the following poles on that side are then measured from the center of each pole to the center of the next pole. The pole locations are marked by measuring in from the outside wall a distance equal to half the width of the large end of the pole and driving a stake as shown by B in Figure 5. (The layout shown in Figure 3 uses 15-foot pole spacings.)

The depth of the holes will depend on the bearing strength of the soil and the weight and height of the building. In soils with a hard layer close to the surface or stiff clays throughout, a depth of 3 feet is enough for poles up to 20 feet in height. A depth of 4 feet is better for most soils and a depth of 5 feet for sandy or soft soils. The holes should be 6 to 8 inches larger in diameter (width) than the butt of the pole, so soil can be tamped around the pole after plates and rafters are in place.

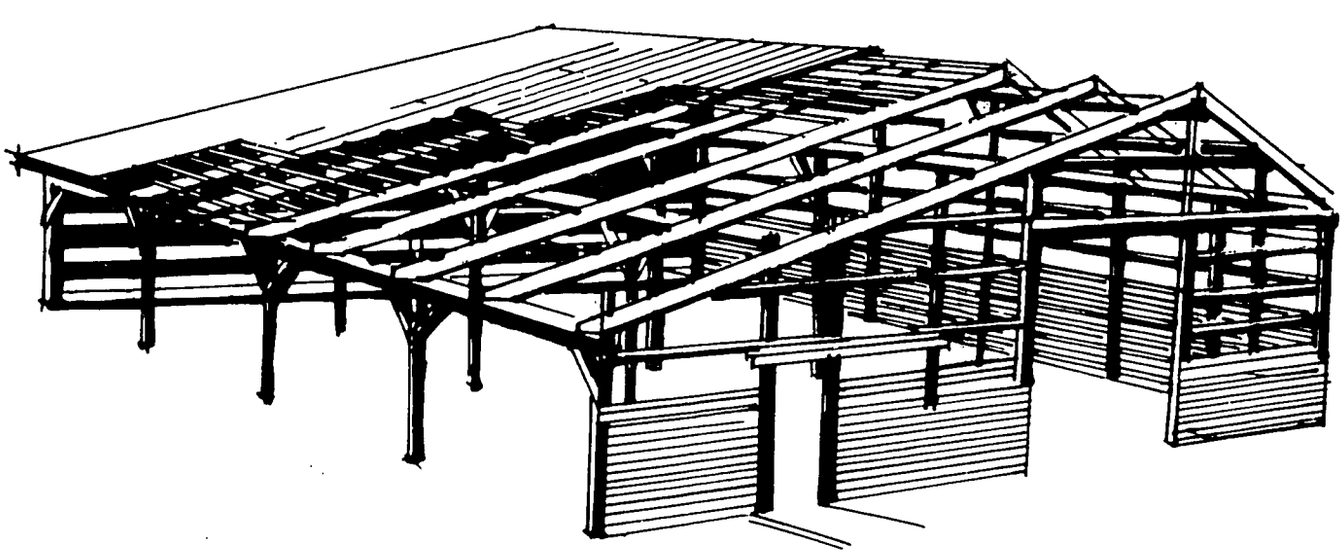

Fig. 4. Univ. of Idaho Agricultural Engineering Shop model of utility pole-frame building that can be used for various purposes, including machine storage.

Where the soil has low bearing qualities, as in wet clay, it is advisable to widen the hole to three times the diameter of the pole and pour a foot of concrete in the bottom and around the pole. To avoid extra settling, loose dirt should be cleaned out of the bottom of holes before poles are placed.

Poles that come in contact with moist soil should be chemically treated if they are to give long service. Pressure-treated poles are best. They should be 2 feet longer than the distance from the bottom of the hole to the roof of the building; this will allow for final trimming at the plate line. For most structures, poles with 5-inch or 6-inch top diameter are suitable.

Pole Alignment. Select the 4 straightest poles for the corners and carefully line them up on the outward side with the ground line as established in Figure 5. Put just enough dirt in the holes to hold the butt ends from shifting out of line; but do not tamp at this time.

Set the sidewall and endwall poles in place, and line them up with the corner poles. Irregularities in sidewall poles must be taken care of, as much as possible, by rotating them so that any crookedness will lie parallel to the siding; this will minimize distortion in the sidewall.

Poles are next aligned vertically on the outward side as shown in Figure 6. Braces from near the top of the poles to stakes hold them in place. Locate a grade-level mark on the outward side of each pole as indicated, and see that these marks are at the same level. Locate them by using a carpenter's level and a straight-edge board. Check these grade marks to make certain they are all at the same elevation; them make them permanent with a nail or a level saw-cut.

Framing. From the grade mark on each pole measure up the required distance to locate the plate. Measure this height on each outside pole and drive a nail in each pole as a mark. The outside plate can then be set directly on the nails and spiked to the poles, as shown in Figure 7.

For stronger construction in windy and heavy snow areas, use bolts or notch the poles for the plates before nailing. To support rafters, the inside plate is placed higher than the outside one, as shown. Put the inside plate in place after the rafters are up.

Purlin plates are fastened to the poles supporting the center of the roof. (See Figure 8.) These inside poles are spaced the same as the outside poles. Note that the rafters are lapped and spiked to the poles.

Figure 9 shows construction of the roof peak. Rafters and girts are lapped and spiked together to save sawing and fitting. The pairs

of rafters on each end of the building are cut and butted together. Rafters can be spaced from 2 to 6 feet apart, depending on the size of the rafter material and the type of roofing to be used. When poles are spaced 12 to 15 feet apart, 2-inch by 10-inch rafters spaced 4 feet apart are satisfactory.

When the rafters are in place, the tops of the poles may be sawed off. The girts are nailed on edge and spaced 2 feet apart when corrugated roofing is used. If 1-inch sheathing is used in place of 2-inch by 4-inch girts, the rafters are best spaced close together.

Siding. To hold the siding, 2-inch by 6-inch girts usually are nailed on the outside of the poles, as shown in Figure 10. Vertical wood siding or metal (roofing) sheet is then nailed over the girts.

General Observations. Concrete footings beneath and around the pole butts are insurance against uneven settling in buildings or pole-frame construction. Poles set in well-drained sand usually do not need this precaution. Poles not less than 8 inches in diameter at the butt will give good bearing area and are less likely to allow uneven settling.

Using untreated poles is inviting disaster at a saving of only a few cents per pole. Pressure treating makes it possible to extend the life of a pole to 30 or 40 years.

Figure 11 shows the use of pole-frame construction for a roof covering over an open trench silo.

Evaluation

Pole frame construction has been used successfully in many parts of the U.S.

Material from...Pole Frame Construction for Idaho Farm Buildings, by Owen K. Brown and Walter R. Friberg, Extension Bulletin no. 194, October, 1953, University of Idaho College of Agriculture Extension Service

77

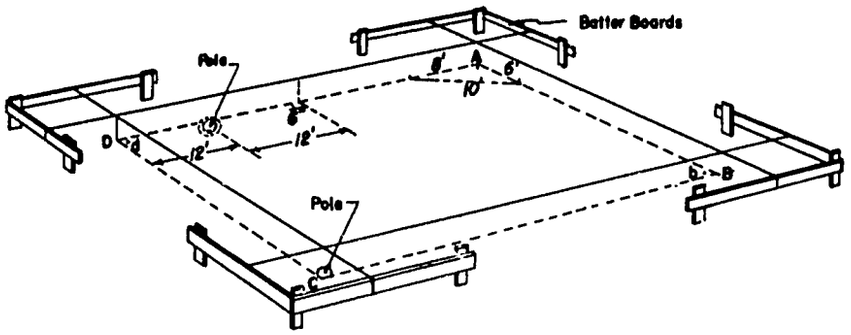

Fig. 5. How to lay out site for a pole-frame building.

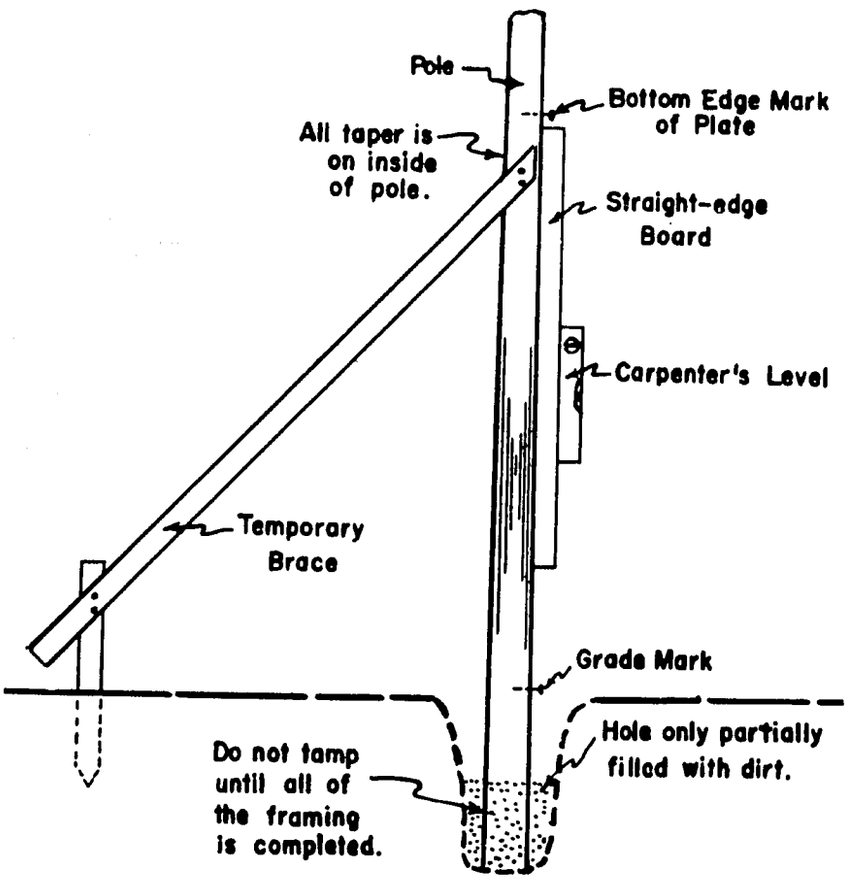

Fig. 6. A method of aligning the poles in pole-frame type of building construction.

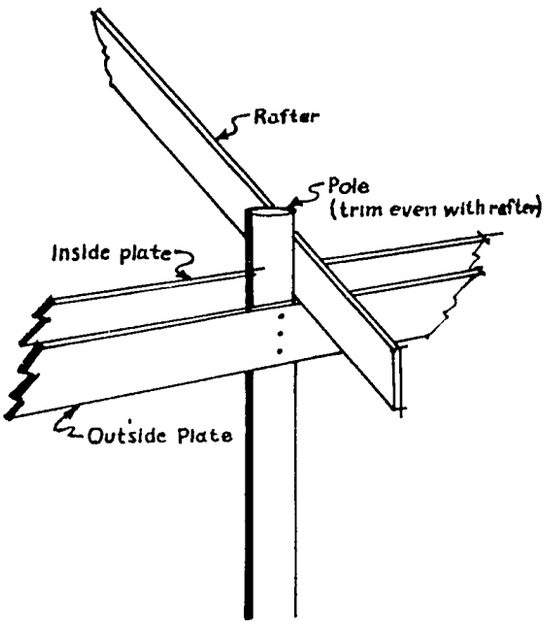

Fig. 7. Framing detail for the outside row of poles in pole-frame building construction.

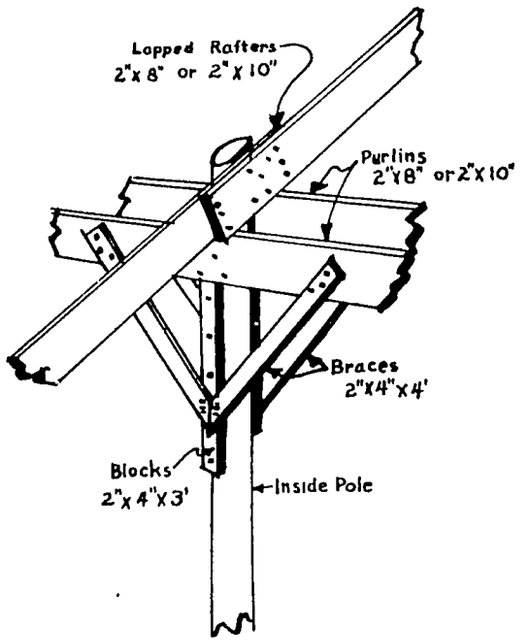

Fig. 8. Method of framing for interior poles, using braces.

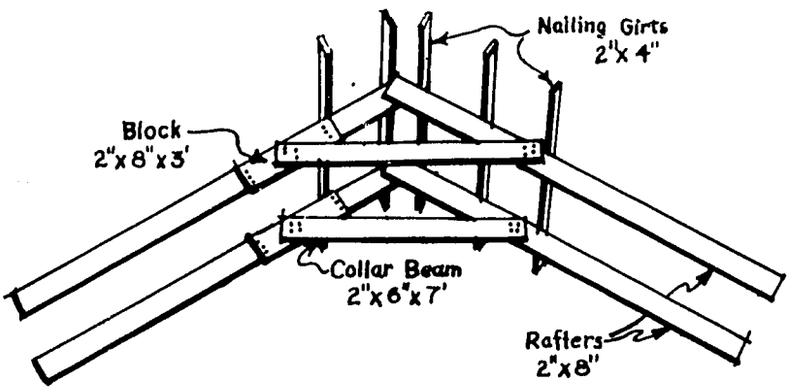

Fig. 9. Ridge framing details for pole-frame building construction.

19

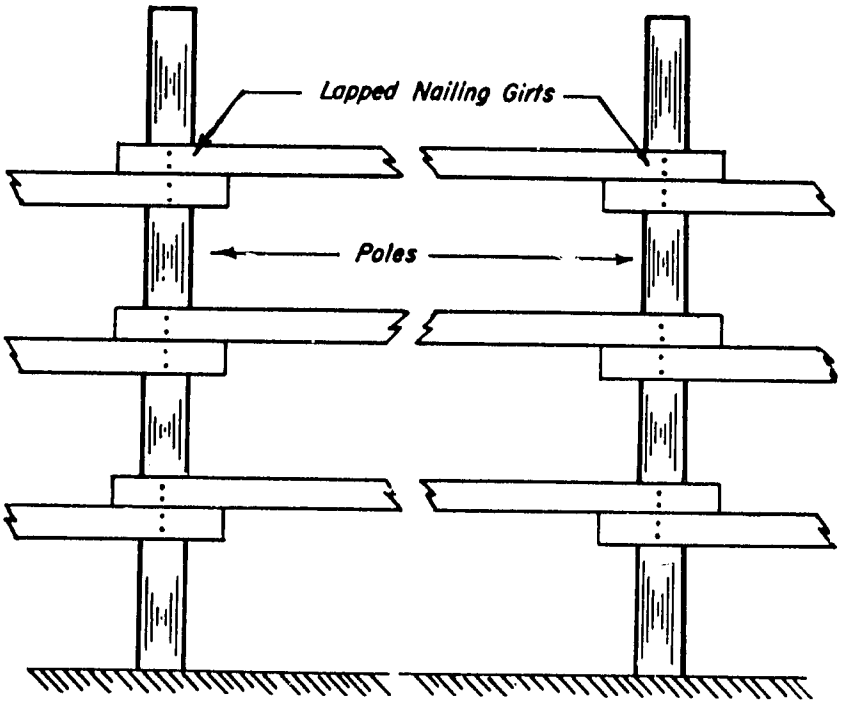

Fig. 10. Side framing details, showing how girts are lapped to eliminate sawing.

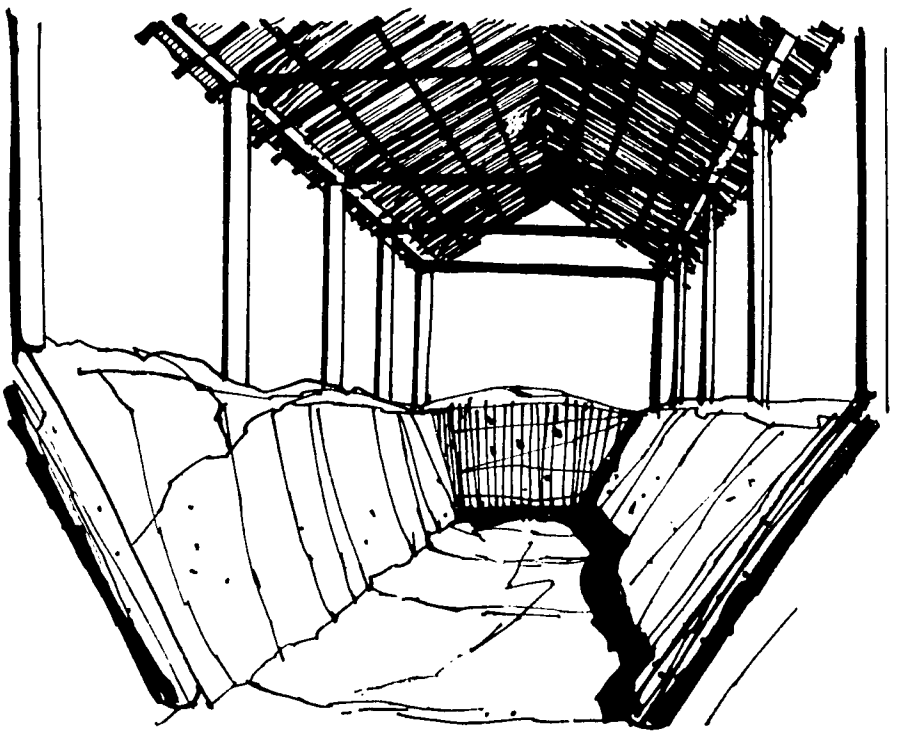

Fig. 11

Trench Silo With Pole-Frame Roof

This trench silo, built in 1948 on a ranch near Laclede in Bonner county, has plastered walls that are still in good condition. The owner says much of his success with trench silage is due to the fact that the shake-covered roof gave protection from rain and snow. The roof is supported by a pole frame.

PREFABRICATED PANELS IN POLE-BUILDING

Abstract

Pole-type construction has become popular in industry and on farms in the United States because of its relatively low cost for materials and putting-up. Prefabricated roof trusses and panels have recently been used to simplify construction and to increase the utility of buildings. This makes the most use of good weather for building as a minimum amount of time is needed, on site, for building erection.

Tools and Materials

Materials needed for one upper panel frame...

- three pieces of wood, 2 by 4 inches by 15 feet, 3 inches
- four pieces of wood, 2 by 4 inches by 21 feet, 9/16 inches
- two pieces of 3/4 inch plumbers strap, 8 inches long
- six galvanized roofing nails, 1½ inch
- four spirally-threaded nails, 3½ by .16 inches
- common nails and casein glue mixture
- four square feet of low-grade plywood, 5/16 inch thick for outside use
- extra cross blocking as needed for covering
- corrugated metal sheets

Details

Key to the system is the hardware which allows for changes in pole location up to 3 inches from the planned position and allows for crook and sweep in the poles plus errors in erection. All of the panels for a building can, therefore, be built in a shop according to an exact pattern.

A new feature in farm buildings, placing openings where and when desired, is possible by the use of panels. With other methods of making walls, the location of doors and windows and other openings cannot be changed even though the use of the building may change over the years. Agricultural workers may find that the use of pole construction and panels will allow them to change wall openings to fit different seasons and work-needs. Industrial managers will also find this system helpful in meeting changing needs.

61

Panel frame construction provides ready-made space for insulation materials. Also, insulation can be easily put in when building, thus saving time and money. Insulation can be used in the spaces between panels and at corners of the building.

The designs used here are for base and upper panels 16 feet long by 4 feet wide. This size was chosen to fit a 40-foot-span trussed building frame developed at the University wood research laboratory and particularly good for panel treatment. Other sizes can be built using the same methods.

These panels and their hardware have been designed to withstand loads from 100-mile winds.

Four base panels and 12 upper panels were built for testing. With a little practice and the pole hardware already installed, it required 10 minutes to put up each panel and five minutes to remove a panel.

Construction is simple, using common materials. First the frame is nailed together, followed by application of the nail-glued gusset plates. When the frames are finished they can be covered with a variety of materials. Corrugated metals, plywood, and others of the various standard outdoor coverings can be used, as well as some of the newer materials such as plastic films.

Methods of fastening standard coverings can follow established patterns. Only one basic rule must be followed -- the covering must extend below the bottom edge of the frame two inches or more, to provide a weathertight lap with the panel below. This lap can be tacked down or covered with a batten. When modular size sheets such as plywood are used, this lap can be made by inserting a horizontal sheet metal strip under the lower edge of the sheet before it is nailed down. This can be bent out over the upper edge of the panel below to form a tab over the crack, which will make an adequate weather seal.

Experimental panels were built, using 28-gage flat sheet metal, 1/8" tempered hardboard, 1/4" plywood, transparent meshed window glazing, and a polyethylene plastic laminate 8 mils thick, white on one side and black on the other. Weight ranged from 115 pounds for the film coverings to 150 pounds for the wood and steel coverings.

The covering does not extend for the full 16-foot length, in order to provide for the necessary leeway in fitting. The resulting gap is easily covered with a strip of the same material, as shown in Figure 2. Corners are given a similar treatment -- a frame is built onto the panels at the corner, using 2" x 2" lumber, and faced with panel covering material as shown in Figure 3. The corner frame can be fabricated in the shop and nailed or bolted in place as a unit.

Jigs, guide lines on the floor, or some other layout aid should be used to realize the full advantage of prefabrication. Such tools speed

82

the work by eliminating the need to align parts, check squareness of corners, etc., and thus reduce the cost of production. Dressed lumber should be used because its relatively uniform dimensions allow pre-cutting of parts to exact length and also eliminate the need for constant shifting of guide blocks in the jig.

Fabricating the Base Panels

The base panels are more heavily constructed than the upper panels because they carry the weight of the latter and must be strong enough to withstand bumping and other abuse. They are very simple in design, as shown in Figure 4. The frame consists of 4 longitudinal 2-inch members, to which 1-inch boards are nailed. A jig or guide line would be helpful but fabrication can be simply accomplished in most cases by laying down the edge 2" x 8" members, nailing on the covering, slipping the 2" x 4" members beneath the covering and nailing them in place. The finishing weight of these panels is from 425 to 450 pounds.

The covering boards can be made of dressed lumber, but, for economy, they can be cut from any suitable rough-sawn random width stock.

Wood at this low level on a building is subject to decay and termites. For long life, pressure treated 2-inch members are recommended, along with cold soaking of the cover boards in a penta solution. A convenient soaking rack can be made by digging a shallow trench and lining it with polyethylene plastic film. Soaking time will vary with the degree of seasoning and the kind of wood used. Twenty-four hours should be sufficient time for most air-dried stock at 70 degrees F. temperature. Lower temperature will lengthen the required time.

Erection Procedure

Details of the upper panel hardware are shown in Figure 5, and details of the lower panel hardware in Figure 6.

1. Establish a level line around the building 40½ inches higher than the intended bottom of the base panel. Fasten one of the base panel pole brackets on each pole with 3/8" x 3" lag screws. Position them centrally on the outside of the pole so that the top shelf-like surface is on the level line.

2. Nail the upper panel pole brackets along the outside of the poles above the base bucket just installed. Use 4" x 3/16" ring-shanked hardened nails (commonly sold as pole building nails). They are vertically positioned so that their horizontal center lines will correspond with the center lines of the horizontal 2" x 4" members in the upper panels.

Until good control is obtained, this practice of installing upper panel pole brackets for one panel at a time should be followed. Since each panel rests on the one below it, a slight error in the space between brackets would be cumulative and could prevent proper alignment of the higher panels. With experience, proper dimensions can be de-

83

vised which will allow complete installation of these brackets all at one time.

3. Install one of the upper panel brackets on a proper level with the horizontal line of the base panel retaining strap. (Figure 6).

4. Install the base panel brackets, remembering that only one is needed for two adjoining panels.

5. Hang the base panels on the base panel pole brackets in the manner shown in Figure 6. Insert ¼" sharpened pins through the pole brackets and retaining straps at the bottom which have not yet been fastened to the panels. Shift the panel laterally as needed to divide the space properly along the length of the building. All lower panels along a side should be hung before performing this operation. Fasten the retaining strap with two lag screws. This fixes the vertical center line of the base panels and all panels which will be placed above them. Finish bolting the ends of the base panel brackets.

6. Hoist an upper panel into place so that it rests on the base panel. Shift it to the right or left so that its vertical center line coincides with that of the base panel. Six inches of lateral adjustment is available. Pin 4 panel brackets to the 4 upper panel pole brackets previously installed (see assembly in Figure 5). These must be slipped over the horizontal 2" x 4" members to perform this operation.

After pinning, fit the panel brackets snugly to the 2" x 4" members and nail each of them with four 1½-inch galvanized roofing nails evenly distributed on the top surface and four more on the lower surface. The holes in the brackets are for nailing convenience. Fasten the center of the panel by nailing down through the lower horizontal 2" x 4" into the panel below with two 16d common nails spaced at the third-points along the length. These need not be driven completely. -- leave the heads up for easy removal.

7. Install successive tiers of upper panels in the same manner. Two single-sheave pulleys and ropes are good hoisting devices for placing upper panels. The heaviest type of upper panel can be handled conveniently by one man at each rope.

8. Cover the gaps between panels by filling in with the same material (see Figure 2). A strip can be cut from rigid types of covering such as plywood or sheet metal and nailed or screwed over the opening. For film-type material, light wood strips can be used to provide the supplementary support needed; or cover panels with light frames can be prefabricated and used. The gap between lower panels is closed by fitting a board or boards of the same material that has been used for these panels.

Removal of Panels

Removal of panels for rearrangement, repairs, or creation of an opening involves reversal of the erection process. The top panel is taken out first followed by the next one below, and so on. If the panels are to be replaced in their same respective places, it is only necessary to pull the pins and the 16d nails on the upper panels and the bolts and pin on the base panels.

If a new arrangement of panels is to be made, the upper panel brackets and the base panel retaining straps must be removed to allow for minor adjustment in the reinstallation.

Evaluation

This type of construction allows for manufacture of panels, hardware and poles during all types of weather, either indoors or at factories. As a result, buildings can be erected rapidly at the site thus making the best use of good building weather and manpower. Demonstration of this building method can be done at experiment stations of the Department or Ministry of Agriculture, in selected villages and elsewhere so that villagers can see its value and learn the building technique.

Material from...PREFABRICATED DEMOUNTABLE PANELS FOR POLE BUILDINGS, by Stanley K Suddarth and Robert H. Perkins, Research Bulletin no. 683, Wood Research Laboratory, Purdue University Agricultural Experiment Station, Lafayette, Indiana.

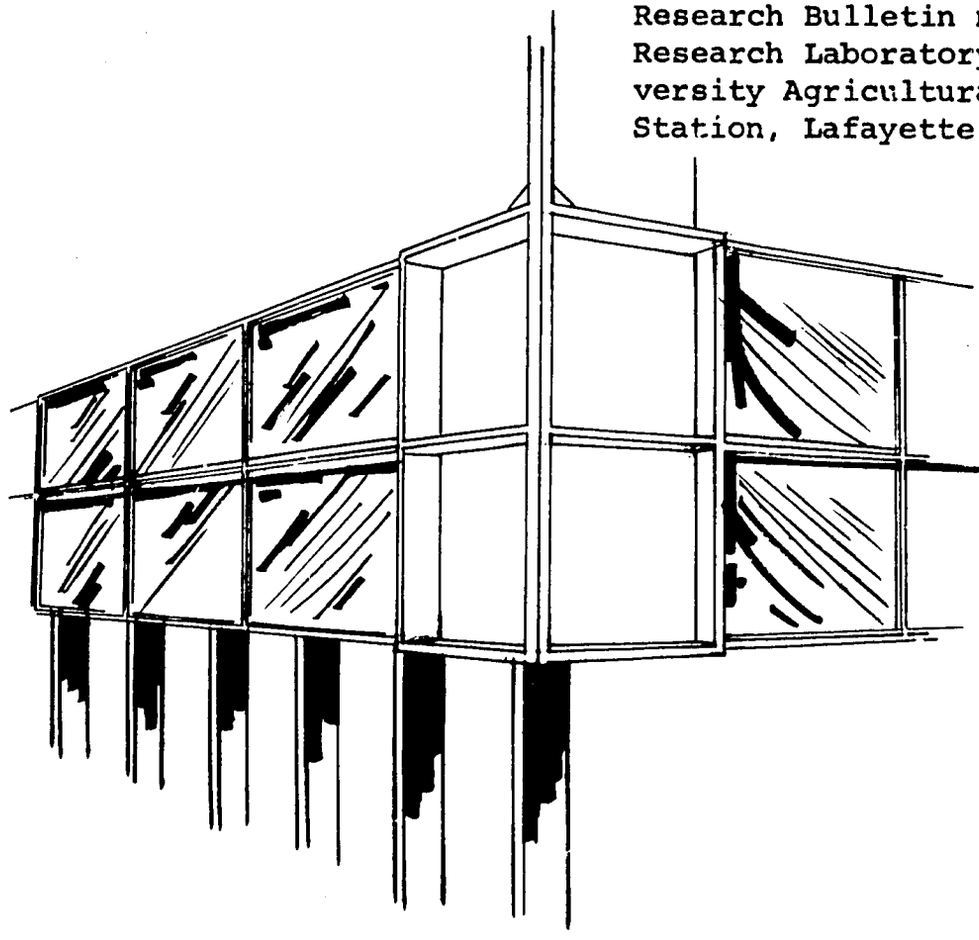

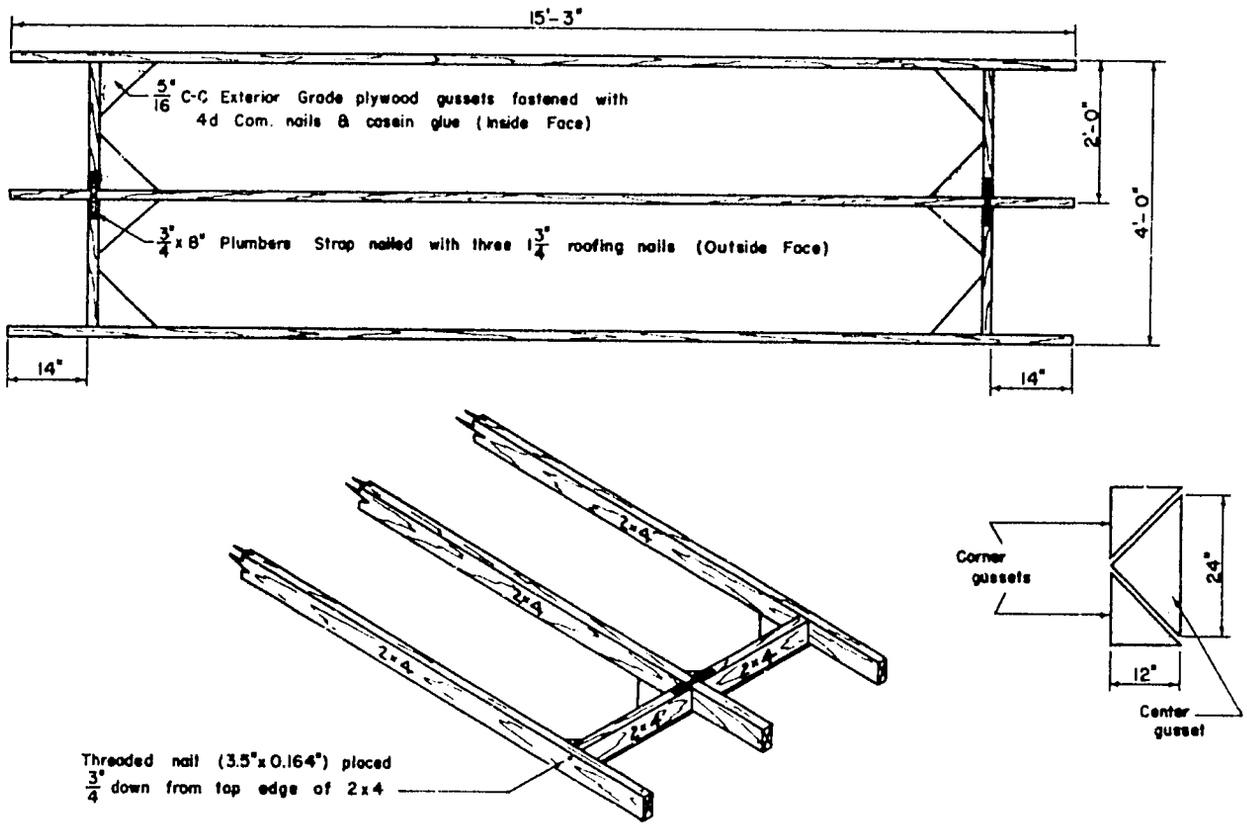

Figure 1. Upper panel frame. The frame can be surfaced with metal sheets, plastic films, plywood, and like materials. Additional cross bracing can be according to the needs of the covering.

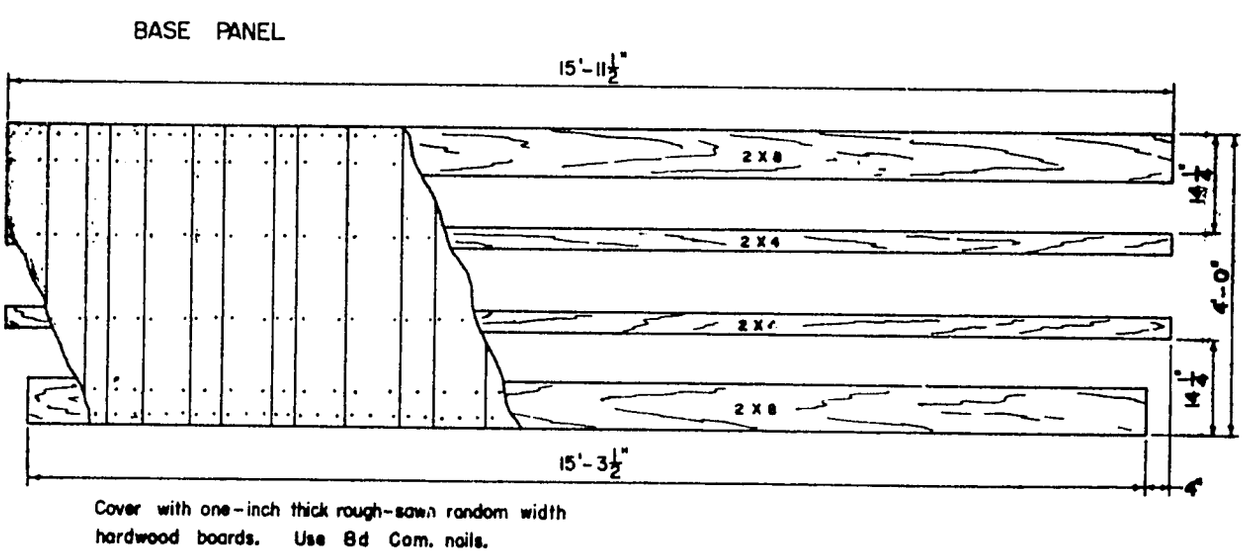

Figure 4. Base panel construction details. The two inch members should be No. 1 Southern Pine, "Construction" grade Douglas Fir, or the equivalent

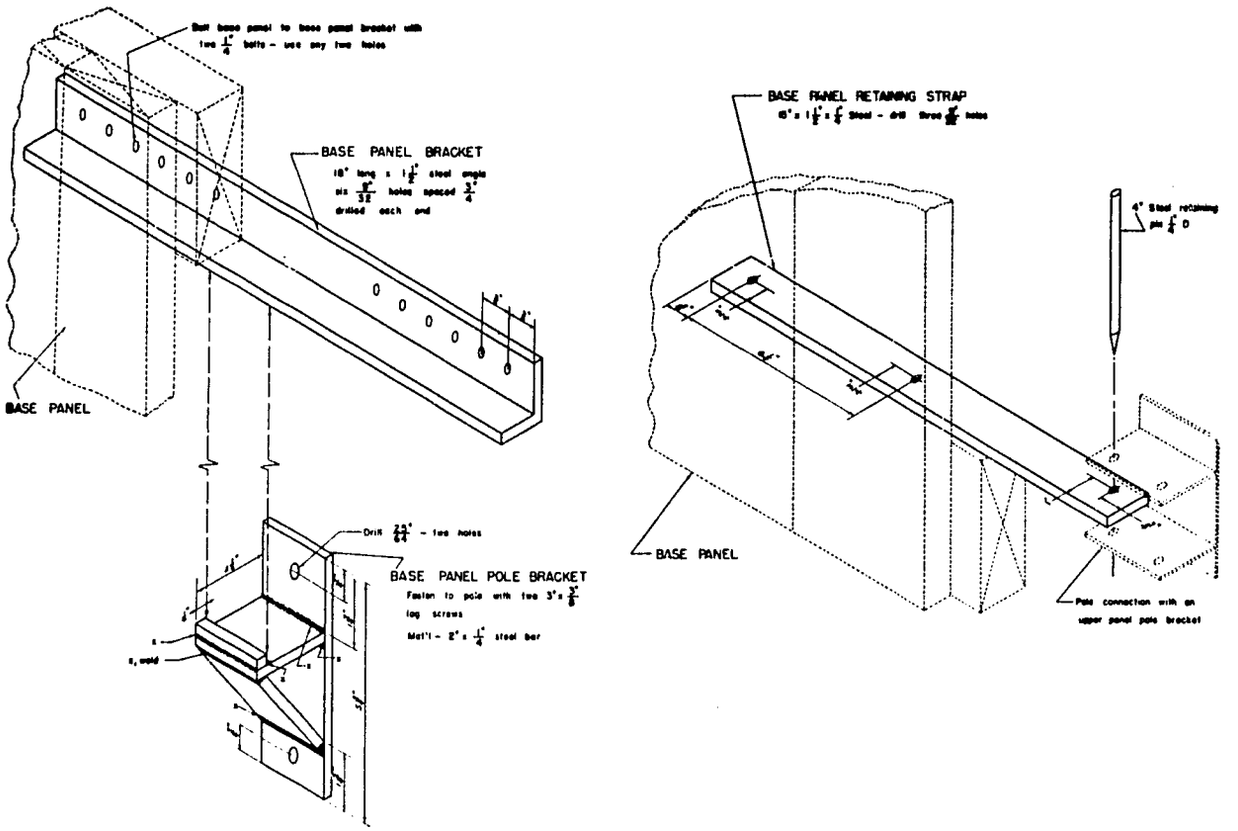

Figure 6. Base panel hardware. Base panel brackets and base panel pole brackets are shared by adjacent panels. Two base panel retaining straps are needed for each panel

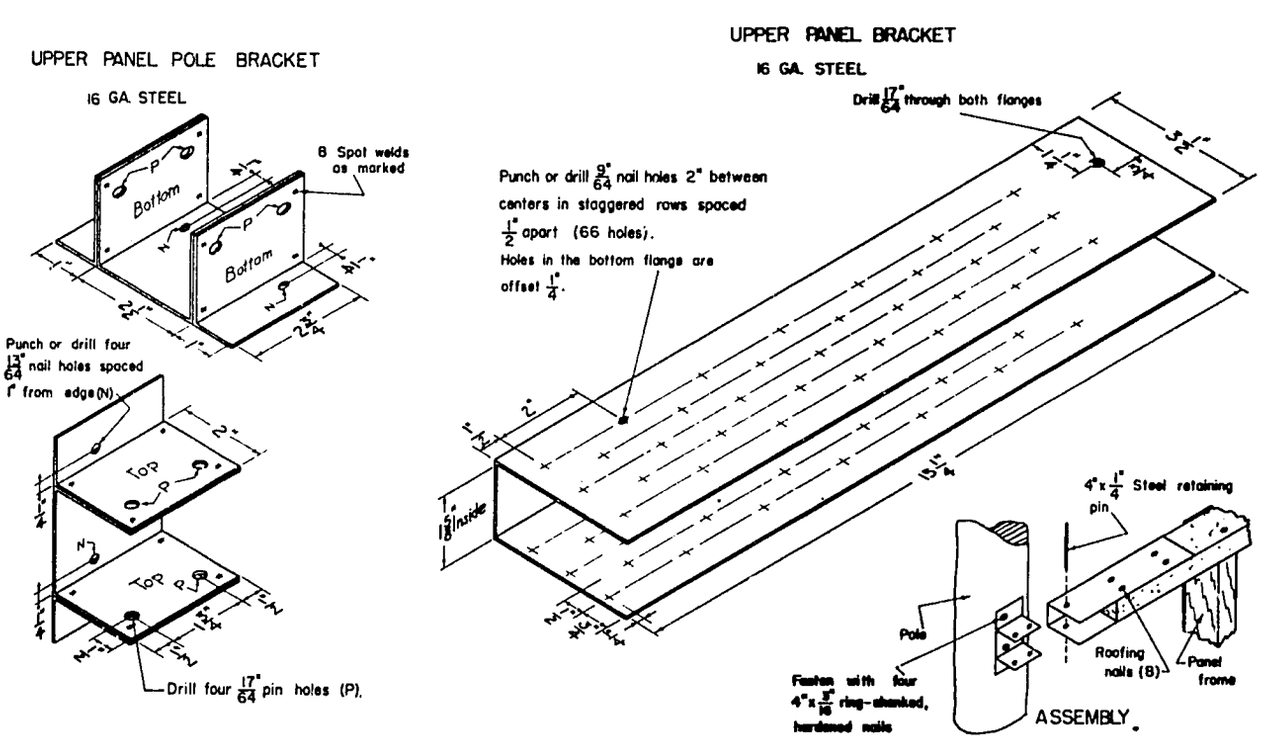

Figure 5. Upper panel hardware. Four upper panel brackets are used on each panel. Four upper panel pole brackets are shared with adjacent panels.

87

CASEIN GLUE

ABSTRACT

A glue of good dry strength and water resistance, well suited to the requirements of furniture making may be made from skim milk and common chemicals.

TOOLS AND MATERIALS

Mixer - paddle and bowl
Scale or balance
Skim milk (for preparation of casein)
Hydrated lime, $Ca(OH)_2$ (may be made from Quicklime, CaO, by adding 20 parts CaO to 100 parts warm water and stirring for 15 minutes
Silicate of soda, also called "Water Glass" and Sodium Silicate
Cupric chloride, $CuCl_2$ (cupric sulfate, $CuSO_4$, also called "Blue Vitreol", may be substituted)
Wire screen or sieve #20 mesh (20 wires/inch)
Cloth for squeezing moisture out of curds

DETAILS

Casein is made from skim milk by the following steps:

1 - The milk is allowed to sour naturally or is soured by slow addition of dilute hydrochloric or sulfuric acid until curds form.

2 - The milk will separate into curd and whey. The whey is drained off and the curd washed by adding water and draining off.

3 - The curd is pressed in a cloth to remove most of the water.

4 - Then the curd is broken into small particles and spread out to dry.

5 - The dry curd (casein) is ground to a powder to pass a #20 mesh screen.

Proportions for mixing casein glue (Formula 11, U.S. Forest Products Laboratory

	Parts by Weight	
Casein	100	
Water	150 to 250	
Hydrated Lime	20 to 30	or 120 parts of Quicklime slurry
Water	100	
Silicate of soda	70	
Cupric chloride	2 to 3	
Water	30 to 50	

Mixing:

A satisfactory casein glue mixer should have a bowl and paddle made of wood or iron or some other material that will not be corroded by the alkali in the glue and that can be cleaned conveniently. Accurate mixing requires that all components be weighed rather than measured by volume.

The casein (100 parts) and water (150 to 200 parts) are weighed into the mixing bowl and stirred sufficiently to distribute the water throughout the casein. If the casein is ground to pass through a 20-mesh screen, it should be allowed to soak for 15 to 30 minutes before proceeding with the preparation. If the casein is more finely ground, the soaking period may be reduced.

The cupric chloride (2 to 3 parts) is dissolved in water (30 to 50 parts) and added with stirring to the moistened casein. Immediately the lime (20 to 30 parts), which has been mixed with 100 parts of water in a separate container, is poured into the mixer containing the casein mixture. When casein and lime are mixed they first form large lumps. These lumps break up rapidly and finally disappear. The solution becomes somewhat thinner. Thorough stirring is very important at this point.

In about one minute after the lime and casein have been united, the glue begins to thicken a little. The sodium silicate must be added at this time. The glue will thicken momentarily, but the stirring should be continued until the glue is free from lumps (should not be more than 20 minutes). If the glue is a little too thick, a small amount of water may be added. If the glue is too thin, it is necessary to start over again with a smaller proportion of water. Hence, it is important to make certain that too much water is not added originally.

EVALUATION

The glue obtained remains useful for more than 7 hours at temperature between 70° and 75° F. It can be used for wood joints that have good dry strength and water resistance.

Casein glue is fluid enough to be spread by a role spreader or by hand with a brush or scraper. Very heavy spreads result in unnecessary waste because the excess glue is squeezed from the joint and contributes nothing to the bond. Very light spreads often result in weak joints. Approximately 65 pounds of wet glue per 1,000 square feet of glue-joint area is suggested as a desirable minimum.

To obtain good contact between the wooden members of a joint, the pressure should be applied while the glue is still wet. Excessive drying does not usually occur before 15 or 20 minutes.

Casein glue produces joints in most of the common species of wood that are equal to or greater than the strength of the wood itself. Casein glue joints are water resistant but not water proof. They will withstand occasional soaking, but if repeatedly soaked and dried they will finally fail.

If casein glue joints are exposed for prolonged periods to conditions favorable to the growth of molds, they will fail in time. Such joints can be expected to prove permanently durable only if the moisture content of the wood does not exceed about 18 to 20% for prolonged or repeated periods.

Dry casein may be kept for a long time in a cool, dry place.

Material From - "Casein Glues: Their Manufacture, Preparation, and Application" Forest Products Laboratory, U.S. Dept. of Agriculture, Forest Service, Madison, Wisconsin (No. 280, April, 1961)

PREPARATION OF FISH GLUE

ABSTRACT

Cold liquid glue may be made from heads, skins and skeletal waste of cod, haddock, mackerel, hake and pollack.

TOOLS AND MATERIALS

Fish heads, skins and skeletal waste
Large pan for washing fish parts
Steam bath or double boiler
Paddle for stirring
Filter such as cheese cloth

DETAILS

The fish material is thoroughly washed to remove blood, dirt and salt. If salted fish are used, washing them with running water for 12 hours is recommended.

The washed, drained material is put into a large container, covered with water and slowly cooked. Low temperature (60° C.) is essential and an open pot is best for avoiding unpleasant odors in the glue. A steam bath or double boiler should be set up so that live steam surrounds the cooking pot. The contents are stirred occasionally. The length of the cooking period varies with the type of fish material used.

The cooked mixture is allowed to settle and the grease is skimmed off and discarded. Then the contents of the cooking pot are poured onto a filter. The liquid which passes through the filter is concentrated (by slow heating) to the thickness desired. This is the glue which may be stored in convenient containers.

The fish material remaining on the filter may be cooked again to extract more glue. Then the filtering and concentrating are repeated.

EVALUATION

Liquid fish glue is recommended where permanent liquid is a convenience. It has an almost indefinite spreadable life. It sets slowly and consequently penetrates farther before hardening, a distinct advantage in a wood joint.

Liquid fish glues have limited water resistance and where such quantities are required, the use of a casein or resin glue is recommended. Thick fish glues, in general, give stronger joints than thinner solutions.

Material From - "Glue & Gelatine" by Paul I. Smith, Chemical Publishing Co., Inc., pg. 54-56, 1943

"Modern Wood Adhesives" by Thomas D. Perry, Pitman Publishing Company, pg. 91-92, 1944

Encyclopedia of Chemical Technology, pg. 211-212.

QV