AGENCY FOR INTERNATIONAL DEVELOPMENT
WASHINGTON, D. C. 20523

BIBLIOGRAPHIC INPUT SHEET

FOR AID USE ONLY
Batch 70

1. SUBJECT CLASSIFICATION

A. PRIMARY: Science and technology — TC00-0000-0000

B. SECONDARY: Applications

2. TITLE AND SUBTITLE

Village technology handbook: water supply,health,and sanitation

3. AUTHOR(S)

(101) Volunteers for Int.Technical Assistance,Inc.,Mt.Rainier,Md.

4. DOCUMENT DATE	5. NUMBER OF PAGES	6. ARC NUMBER
1964	88p.	ARC 621.9.A265 1964

7. REFERENCE ORGANIZATION NAME AND ADDRESS

AID/TA/OST

8. SUPPLEMENTARY NOTES *(Sponsoring Organization, Publishers, Availability)*

(In English and French. French,104p.: PN-AAE-922)

9. ABSTRACT

10. CONTROL NUMBER

PN-AAE-921

11. PRICE OF DOCUMENT

12. DESCRIPTORS

Intermediate technology
Toilet facilities
Water distribution
Water supply
Water treatment

13. PROJECT NUMBER

14. CONTRACT NUMBER

AID/TA/OST

15. TYPE OF DOCUMENT

AID 590-1 (4-74)

VILLAGE TECHNOLOGY HANDBOOK

PN-AAE-921
AID/TA/...

2

CI-12

WATER SUPPLY, HEALTH, AND SANITATION

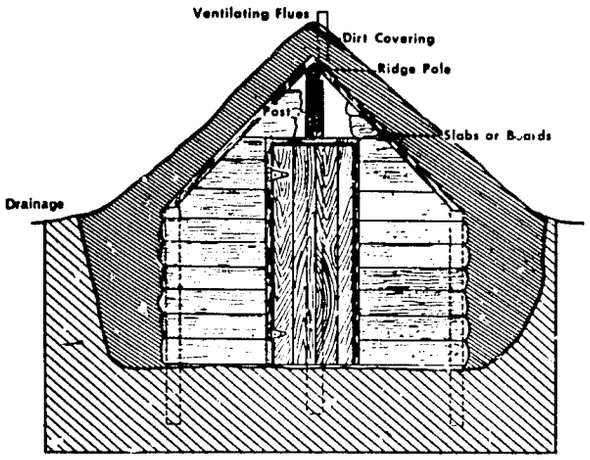

Outdoor Storage Celler

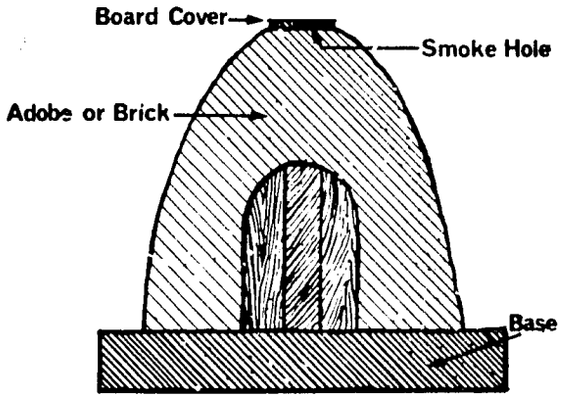

Outdoor Oven

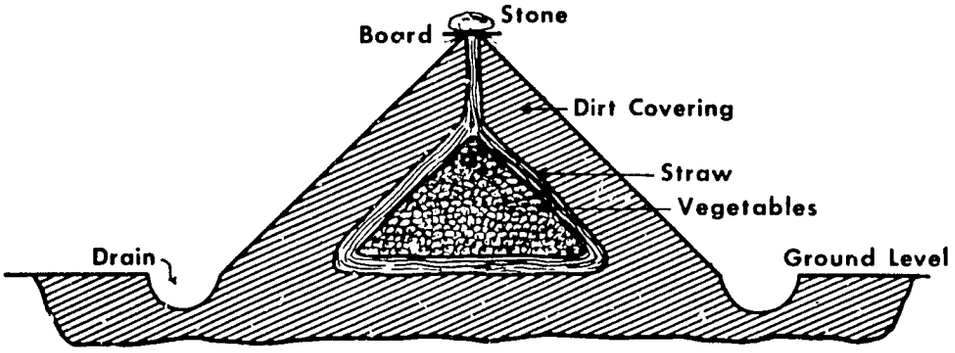

Outdoor Storage Pits

DEPARTMENT OF STATE • AGENCY FOR INTERNATIONAL DEVELOPMENT
COMMUNICATIONS RESOURCES DIVISION
Washington, D. C. 20523

TABLE OF CONTENTS

PAGE

INTRODUCTION

3 Foreword
4 How To Use This Handbook

WATER SUPPLY

5 Spring Development
8 Cisterns
11 Cistern Catchment
14 Cistern Filter
16 Sand Filter
19 Water Purification Plant
22 Reconstruction Of Dug Wells
26 Deep Dug Well
30 Driven Well
34 A Sanitary Rope And Bucket Well
36 Determination Of Water Flow With Known Pipe Size And Reservoir Height And Location
38 Estimating Small Stream Water Flow
41 Selecting A Dam Site
44 Water Lift
46 Chain Pump For Irrigation
50 Estimating Paddle Wheel Power
53 Reciprocating Wire Power Transmission
56 Map Making Using A Plane Table

HEALTH AND SANITATION

59 Introduction To Sanitary Latrines
61 Privy Location
63 Privy Shelters
65 Pit Privy
69 Water Privy
73 Philippine Water Seal Latrine

AGRICULTURE

81 Tile For Garden Irrigation And Drainage
84 Concrete Tile Machine
94 Making Concrete Tile
96 Siphon Tube
98 Spring Winder
100 Fresno Scraper
106 Buck Scraper
109 Float With Adjustable Blade
112 V-Drag

FOOD PROCESSING AND PRESERVATION

115 Multiple Hitches
118 Dessiccant Drying For Grain, Etc.
121 Winter Storage of Vegetables

PAGE

123 Outdoor Storage Pits
126 Outdoor Storage Cellar
127 Corn Silage

HOUSING AND CONSTRUCTION

131 Splitting Bamboo
133 Bamboo Joints
136 Bamboo Preservation
138 Bamboo Board
141 Bamboo Walls, Partitions and Ceilings
143 Pole Frame Construction For Farm And Utility Buildings
150 Prefabricated Panels In Pole Building
157 Casein Glue
160 Preparation Of Fish Glue

HOME IMPROVEMENT

163 Cooking Stove
167 Outdoor Oven
169 Home Soap Making
174 A Nest Of Low-Cost Beds
176 A Locally-Made Mattress
178 Potter's Wheel Sewing Machine Drive
184 Small Rectangular Kiln
193 Salt Glaze For Pottery

COMMUNICATIONS

195 Inexpensive Rubber Cement
197 Flashlight Slide Projector
199 Filmstrip Adaptor For The Flashlight Slide Projector
202 Gelatin Duplicator
204 Paper Stencil Method
206 Silk Screen Paint

TABLES

209 Temperature Conversion
210 Length Conversion
212 Weight Conversion

FOREWORD

It is in a world of villages that most of the people live. Surrounding these villages are the farmlands that feed the nations and support their economic development. Thus, any improvement in the villages is of benefit to all.

This second edition of the Village-Technology Handbook aims at helping to generate village-improvement in many nations through listing additional ideas, methods and materials that have proven useful in villages throughout the world.

Widespread usage of the first Village Technology Handbook, issued in August, 1963, and comments from field technicians and others who have used it, have shown the need for this interchange of ideas. In essence, these handbooks are a clearing house through which technicians can tell each other of low-cost, locally-developed means of village improvement that they have experienced or observed.

Those who read and use these handbooks should see that this knowledge reaches down into the village and results in village action. At the same time, they should inform this office of those useful ideas and methods that they believe will have value in other nations.

Additional copies of this handbook can be obtained from the United States Agency for International Development in foreign countries or from the Communications Resources Division, Agency for International Development, Washington, D. C. 20523, U. S. A.

ooo

The Agency for International Development is indebted to Volunteers for International Technical Assistance, Inc. for a major part of the content of this publication. Compilation, testing and development of the material was completed by VITA under contract with the Office of Technical Services, Department of Commerce.

HOW TO USE THIS HANDBOOK

The major purpose of this handbook is to describe low-cost activities that can be locally developed by villagers. However, there are activities that...

- can be developed only with guidance of trained technicians or other trained individuals
- need equipment that must be used on a multi-village basis, because of cost factors
- require materials that can be best produced at a central facility and distributed to the villages

It is recommended that these activities be considered for program activity by government extension agencies, co-operatives, and other organizations capable of developing activities on a multi-village basis.

In some cases, village leaders and personnel of cooperatives can be trained in the techniques and provided with the necessary equipment. Operations teams can also be organized and trained to demonstrate techniques or guide the villagers in development of the project.

Other articles can be studied for local adaptation, translation and distribution directly to the villages, extension agents, cooperatives, etc.

It is also recommended that you obtain a copy of the first Village Technology Handbook, if you do not already have one. This contains basic information on the use of concrete and many village-improvement activities.

The conversion tables shown at the end of this handbook are for your convenience. They will help you to quickly convert any size or quantity to the system used in your country.

Conversions have been made for you in some of the following articles. These conversions are only guides and must be adapted to locally available materials. When this is done,be sure to make necessary changes in related sizes. (Ex: Holes must be changed according size of local bolts.)

TEMPERATURE CONVERSION

ABSTRACT

This chart is useful for quick conversion from Centigrade to Fahrenheit and vice versa. The equations provide slower but more accurate results.

TOOLS AND MATERIALS (None)

DETAILS

Although the chart is fast and handy, you must use the equations below to calculate the exact conversion if your answer must be accurate to within one degree:

Degrees Centigrade = 5/9 x (Degrees Fahrenheit -32)

Degrees Fahrenheit = 1.8 x (Degrees Centigrade +32)

This example may help to clarify the use of the equations; 72 F equals how many degrees Centigrade?

$$72^{\circ}F = 5/9\ (^{\circ}F - 32)$$

$$72^{\circ}F = 5/9\ (72 - 32)$$

$$72^{\circ}F = 5/9\ (40)$$

$$72^{\circ}F = 22.2\ ^{\circ}C$$

Notice that the chart reads 22 °C, an error of about 0.2 °C.

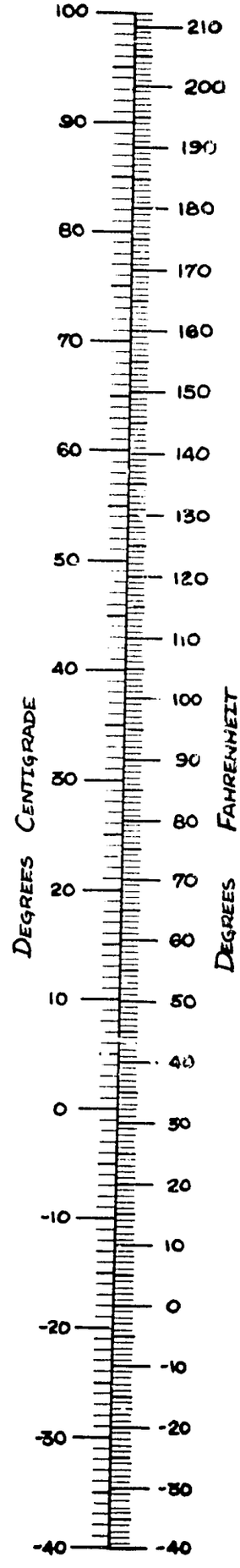

LENGTH CONVERSION

ABSTRACT

This foldout chart is useful for quick conversion from meters and centimeters to feet and inches or vice-versa. For distances greater than three meters, or more accurate results, the tables or conversions equations must be used.

TOOLS AND MATERIALS (None)

DETAILS

The chart (page 4) has metric divisionf of one centimeter to three meters, and English graduations in inches and feet to ten feet. It is accurate to about plus or minus one centimeter. Folding out the chart makes a handy reference when studying other drawings in the Handbook.

For more accurate results these tables are useful:

INCHES INTO CENTIMETERS
(1 in. = 2.539977 cm.)

inches	0	1	2	3	4	5	6	7	8	9
0	cm.	2.54	5.08	7.62	10.16	12.70	15.24	17.78	20.32	22.86
10	25.40	27.94	30.48	33.02	35.56	38.10	40.64	43.18	45.72	48.26
20	50.80	53.34	55.88	58.42	60.96	63.50	66.04	68.58	71.12	73.66
30	76.20	78.74	81.28	83.82	86.36	88.90	91.44	93.98	96.52	99.06
40	101.60	104.14	106.68	109.22	111.76	114.30	116.84	119.38	121.92	124.46
50	127.00	129.54	132.08	134.62	137.16	139.70	142.24	144.78	147.32	149.86
60	152.40	154.94	157.48	160.02	162.56	165.10	167.64	170.18	172.72	175.26
70	177.80	180.34	182.88	185.42	187.96	190.50	193.04	195.58	198.12	200.66
80	203.20	205.74	208.28	210.82	213.36	215.90	218.44	220.98	223.52	226.06
90	228.60	231.14	233.68	236.22	238.76	241.30	243.84	246.38	248.92	251.46

CENTIMETERS INTO INCHES
(1 cm. = 0.3937 in.)

cm.	0	1	2	3	4	5	6	7	8	9
0	inches	0.394	0.787	1.181	1.575	1.969	2.362	2.756	3.150	3.543
10	3.937	4.331	4.724	5.118	5.512	5.906	6.299	6.693	7.087	7.480
20	7.874	8.268	8.661	9.055	9.449	9.843	10.233	10.630	11.024	11.417
30	11.811	12.205	12.598	12.992	13.386	13.780	14.173	14.567	14.961	15.354
40	15.748	16.142	16.535	16.929	17.323	17.717	18.110	18.504	18.898	19.291
50	19.685	20.079	20.472	20.866	21.260	21.654	22.047	22.441	22.835	23.228
60	23.622	24.016	24.409	24.803	25.197	25.591	25.984	26.378	26.772	27.165
70	27.559	27.953	28.346	28.740	29.134	29.528	29.921	30.315	30.709	31.102
80	31.496	31.890	32.283	32.677	33.071	33.465	33.858	34.252	34.646	35.039
90	35.433	35.827	36.220	36.614	37.008	37.402	37.795	38.189	38.583	38.976

An example may help explain how to use this type of table. Suppose you wish to find how many inches are equal to 66 cm. On the cm. to in. table look down the leftmost column to 60 cm., and then right to the column headed 6 cm. This gives the result, 25.984 inches.

EQUATIONS

1 inch = 2.54 cm.
1 foot = 30.48 cm.
= 0.3048m.
1 yard = 91.44 cm.
= 0.9144m.
1 mile = 1.6. km.

1 cm. = 0.3937 in.
1 m. = 39.37 in.
= 3.28 ft.
1 km. = 0.62137 mile

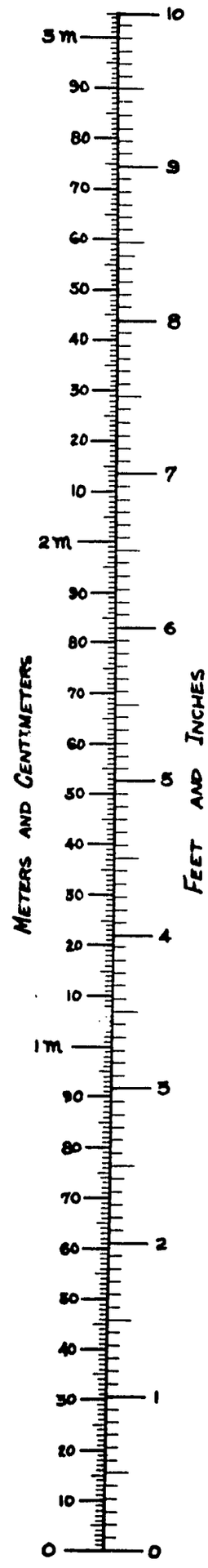

WEIGHT CONVERSION

ABSTRACT

The chart converts pounds and ounces to kilograms and grams of vice versa. For weights greater than ten pounds, or more accurate results, the tables or conversion equations must be used.

TOOLS AND MATERIALS (None)

DETAILS

Notice that there are sixteen divisions for each pound on the chart to represent ounces. There are only 100 divisions in the first kilogram, and each division represents ten grams. The chart is accurate to about plus or minus twenty grams.

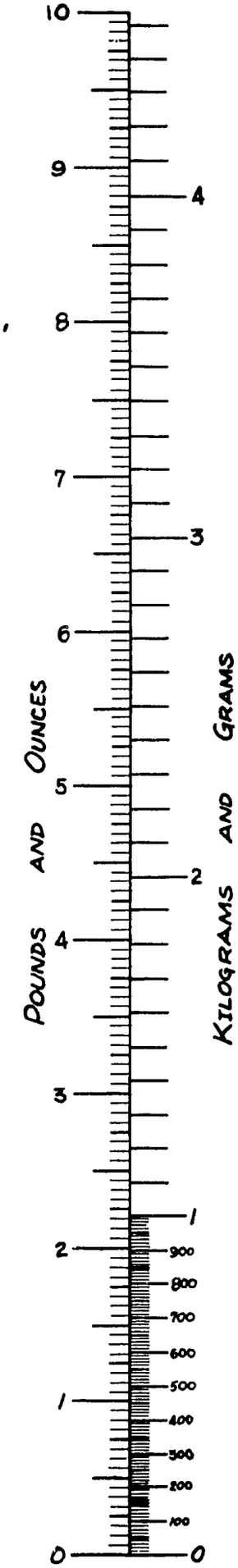

KILOGRAMS INTO POUNDS
(1 kg. = 2.20463 lb.)

kg.	0	1	2	3	4	5	6	7	8	9
0	lb.	2.20	4.41	6.61	8.82	11.02	13.23	15.43	17.64	19.84
10	22.05	24.25	26.46	28.66	30.86	33.07	35.27	37.48	39.68	41.89
20	44.09	46.30	48.50	50.71	52.91	55.12	57.32	59.53	61.73	63.93
30	66.14	68.34	70.55	72.75	74.96	77.16	79.37	81.57	83.78	85.98
40	88.19	90.39	92.59	94.80	97.00	99.21	101.41	103.62	105.82	108.03
50	110.23	112.44	114.64	116.85	119.05	121.25	123.46	125.66	127.87	130.07
60	132.28	134.48	136.69	138.89	141.10	143.30	145.51	147.71	149.91	152.12
70	154.32	156.53	158.73	160.94	163.14	165.35	167.55	169.76	171.96	174.17
80	176.37	178.58	180.78	182.98	185.19	187.39	189.60	191.80	194.01	196.21
90	198.42	200.62	202.83	205.03	207.24	209.44	211.64	213.85	216.05	218.26

POUNDS INTO KILOGRAMS
(1 lb. = 0.45359 kg.)

lb.	0	1	2	3	4	5	6	7	8	9
0	kg.	0.454	0.907	1.361	1.814	2.268	2.722	3.175	3.629	4.082
10	4.536	4.990	5.443	5.897	6.350	6.804	7.257	7.711	8.165	8.618
20	9.072	9.525	9.979	10.433	10.886	11.340	11.793	12.247	12.701	13.154
30	13.608	14.061	14.515	14.969	15.422	15.876	16.329	16.783	17.237	17.690
40	18.144	18.597	19.051	19.504	19.958	20.412	20.865	21.319	21.772	22.226
50	22.680	23.133	23.587	24.040	24.494	24.948	25.401	25.855	26.308	26.762
60	27.216	27.669	28.123	28.576	29.030	29.484	29.937	30.391	30.844	31.298
70	31.751	32.205	32.659	33.112	33.566	34.019	34.473	34.927	35.380	35.834
80	36.287	36.741	37.195	37.648	38.102	38.555	39.009	39.463	39.916	40.370
90	40.823	41.277	41.730	42.184	42.638	43.091	43.545	43.998	44.452	44.906

EQUATIONS

1 oz. = 28.35 g. 1 g. = 0.03527 oz.
1 lb. = 0.4536 kg. 1 kg. = 2.205 lb.

WATER SUPPLY

ASIA

SPRING DEVELOPMENT

Abstract

Springs often make an excellent water source, but should be dug deeper, sealed, fenced and piped to the home.

Tools and Materials

Hand tools for digging
Reinforced concrete
Screens
Pipes

Details

Proper development of a spring will increase the flow of ground water and lower the chance of contamination from surface water. Springs are usually of two types: gravity seepage, where the water-bearing soil comes to the surface over hard underlying soil; artesian,* where the water, under pressure and trapped by a hard layer of soil, finds an opening and wells to the surface.

Dig a small hole near the spring to learn whether the spring is gravity-seepage or artesian* and the depth of the hard soil. Check uphill and nearby for sources of contamination. Have the water tested to see if it must be purified before drinking. A final point...does the spring run water during long, dry spells.

Usually the soil is dug to the hard, underlying part and a tank of reinforced, water-tight concrete is made on all but the uphill side. The opening on the uphill side should be lined with porous concrete or stone without mortar, so as to admit the gravity seepage water. It can be backfilled with gravel and sand, which helps keep fine materials in the water-bearing soil from entering the spring. If the hard soil cannot be reached easily, a concrete cistern is built which can be fed by a pipe containing holes that is placed in the water-bearing layer of earth. With an artesian* type of spring, all sides of the tank are made of water-tight, reinforced concrete but the bottom is left open. The water then enters through the bottom.

You should also read the section in this publication on cisterns, before developing your spring.

No matter how the water enters your tank, you must insure the purity of the water by providing...

- a complete cover to stop surface pollution and keep out light which causes algae to grow.

- a locked manhole with at least a two inch overlap to prevent entrance of polluted ground water.

- a screened overflow which discharges at least six inches above the ground. The water must land on a rock surface to stop the water from making a hole in the ground and to insure proper drainage away from the spring.

- arrange the spring so that surface water must filter through at least 10 feet of soil before reaching the ground water. Do this by making a diversion ditch for the surface water about 50 feet or more from the spring. Also, if necessary, cover the surface of the ground near the spring with a heavy layer of soil or clay to increase the distances that rainwater must travel, thus insuring that it has to filter through 10 feet of soil.

- make a fence to keep people and animals away from the spring's immediate surroundings.

- a screened intake which is piped to the house.

- provision for draining the spring to clean it.

- before using the spring, disinfect it thoroughly by adding chlorine, Shut off the flow to hold the chlorine solution in the well for 24 hours. If the spring overflows even though the water is shut off, arrange to add chlorine so that it remains strong for at least 30 minutes with 12 hours much safer. After the chlorine is flushed from the system have the water tested.

Evaluation

A spring water supply, particularly from a sandy soil above a village, often makes an excellent source of water that is safe for drinking. If fissured rock or limestone are present, get advice.

Material from...Manual of Individual Water Supply Systems, U. S. Department of Health, Education and Welfare, Public Health Service Publication No. 24

Water Supply for Rural Areas and Small Communities, E. G. Wagner and J. N. Lanoix (1959), World Health Organization, Geneva.

* In some areas of the world, all springs are called Artesian. In thes countries, it might be better to use the term 'Pressure' springs or 'Strong' springs for the Artesian spring described here.

Fig. 33. PROPERLY PROTECTED SPRING (I)

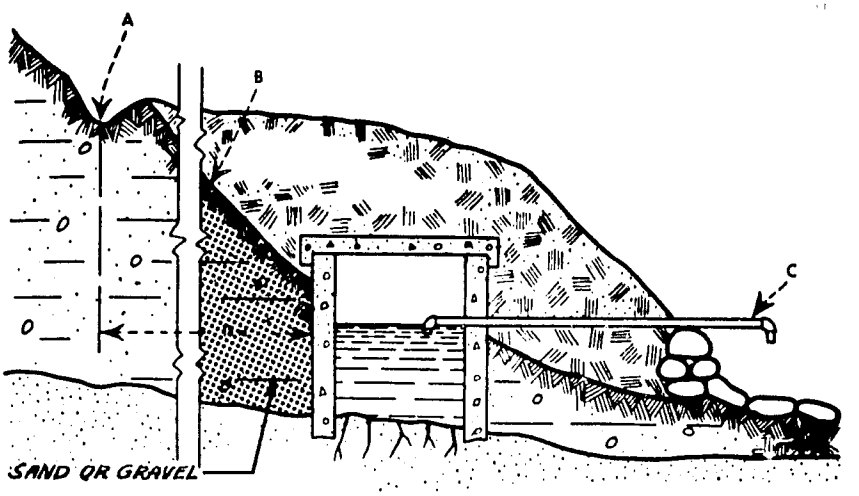

A = Protective drainage ditch to keep drainage water a safe distance from spring
B = Original slope and ground line
C = Screened outlet pipe : can discharge freely or be piped to village or residence

Springs can offer an economical and safe source of water. A thorough search should be made for signs of ground-water outcropping. Springs that can be piped to the user by gravity offer an excellent solution. Rainfall variation may influence the yield, so dry-weather flow should be checked.

Fig. 34. PROPERLY PROTECTED SPRING (II)

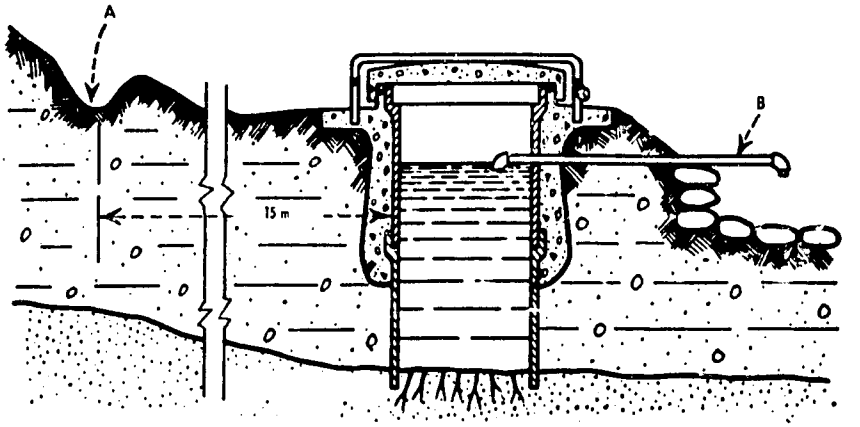

A = Protective drainage ditch to keep drainage water a safe distance from spring
B = Screened outlet pipe : to discharge freely or be piped to village or residence

CISTERNS

Abstract

These directions tell how to make and use a tank for sanitary storage of rainwater for family use.

Tools and Materials

Tools and materials for reinforced concrete
Asphalt sealing compound
Screening
Pipe

Details

The cistern must be watertight to prevent surface contamination from polluting the supply. Reinforced concrete is the best material since it is strong, has a long life, and can be made quite watertight. A manhole and drain must be provided so it can be cleaned.

A vent and a place to easily add chlorine for disinfection are also necessary. The size of the cistern depends on the family's daily needs and the length of time between rainy periods. If a family needs 25 gallons of water a day and there are 125 days between rainy periods, then the cistern must hold 25 x 125 or 3,125 gallons. Usually, it is best to build a cistern holding 3000 gallons or more. A cistern holding 3000 U. S. gallons has an inside size of 7½ x 7½ x 7½ feet.

To insure that the cistern is watertight, use about 5½ U.S. gallons of water to 100 pounds of cement, when mixing the concrete (see section on concrete), tamp it thoroughly and keep the surface damp for at least 10 days. If possible, pour the walls and floor at the same time. The manhole entrance must be 4 inches above the cistern surface and the cover should overlap by 2 inches. Slope the bottom of the cistern so one part is lower than the rest and water can be more easily siphoned or bailed out when cleaning. You can do this by scraping the bottom to the proper contour. Do not use fill dirt for it will not settle evenly and this may cause your cistern to crack. A screened frain pipe and valve will make cleaning easier.

An overflow pipe is not needed if the roof-cleaning butterfly valve is properly used. If the overflow is installed, be sure to cover the outlet carefully with copper window screen. A screened vent is necessary if there is no overflow, in order to allow displaced air to leave the cistern. The hand pump must be securely mounted to bolts cast into the concrete cistern cover. The flanged base of the pump should be solid, with no holes for contamination to enter, and sealed to the pump cover, or the drop pipe must be sealed in with concrete and asphalt sealing compound.

A small pipe with a screwed-on cap is needed to measure the water in the cistern and to add chlorine solution after each rain. The amount of water in the cistern is measured with a stick marked in thousands of gallons. To disinfect after each rainfall, add one of the following for each 1000 U. S. gallons of water in the cistern:

- two ounces of bleaching powder (calcium hypochlorite)
- 3/4 cup of 5/2 percent laundry bleach solution
- 1¼ cups of 3% laundry bleach solution

Size of cup: use an eight ounce ordinary measuring cup. An ounce of chlorinated lime is roughly one tablespoon of powder about 1¼ inch deep in the center of the spoon.

A newly constructed or repaired cistern should always be disinfected with a solution 10 times stronger than that shown above. The cistern walls and the filter should be thoroughly washed and rinsed with this strong solution. Disinfection of a small-pressure system is readily done by pumping this strong solution throughout the systems and allowing it to stand overnight.

Evaluation

A cistern water supply for human use should only be used when ground water is not available or heavily contaminated with minerals, since the cistern is usually more expensive to build and needs more care. A properly built cistern system, when properly cared for, will provide a convenient source of soft water.

Material adapted from...

Cisterns, State of Illinois Department of Public Health, circular no. 833

Manual of Individual Water Supply Systems, U. S. Department of Health, Education and Welfare, Public Health Service publication no. 24

Water Supply for Rural Areas and Small Communities, E. G. Wagner and J. N. Lanoix (1959), World Health Organization, Geneva, Switzerland

Fig. 64. CISTERN WITH SAND FILTER (PUMP INSTALLATION OPTIONAL)

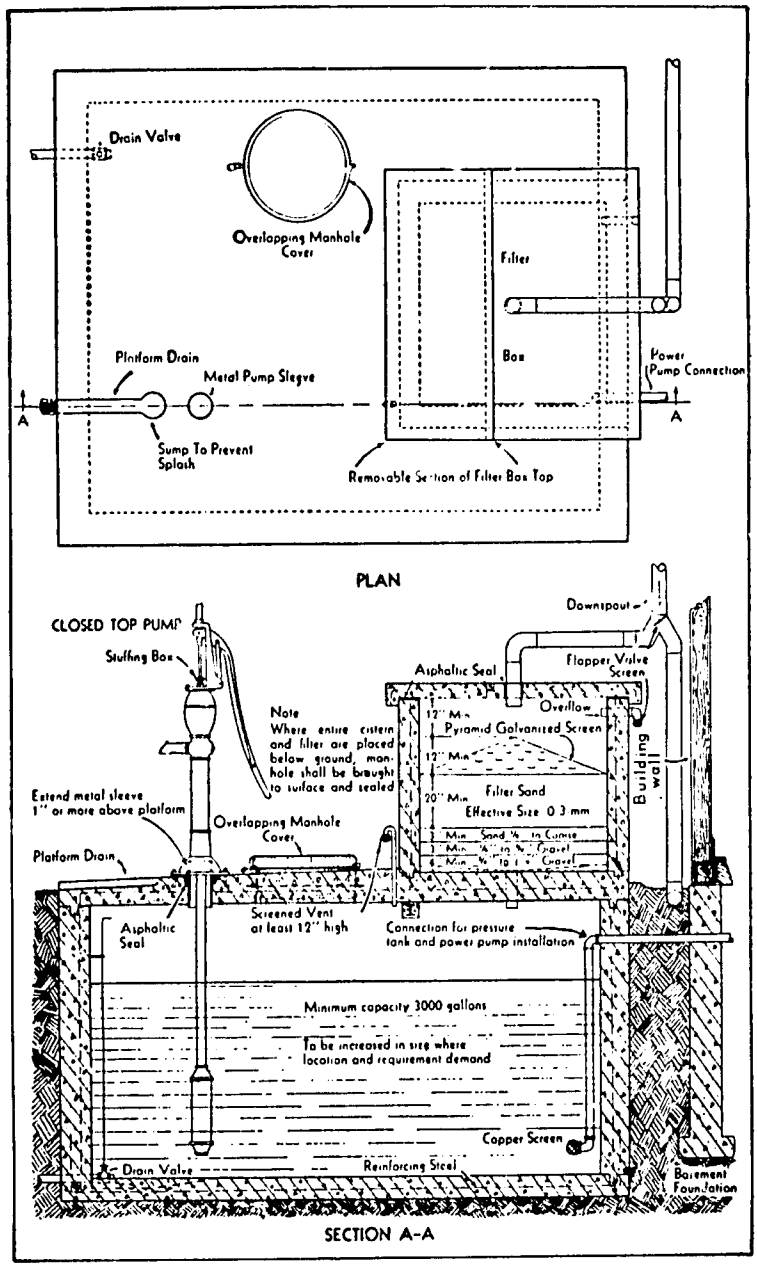

Reproduced from US Public Health Service, Joint Committee on Rural Sanitation (1950) *Individual water supply systems*, Washington, p. 32

CISTERN CATCHMENT

Abstract

Rainwater for a cistern is usually collected from the roof of the house. A catchment of the proper size is a necessary part of the cistern water supply.

Tools and Materials

Galvanized iron roof or equivalent
Trough collectors
Downspout

Details

Cisterns for family use are most practical in areas of adequate rainfall, where ground water is difficult to obtain or where the water has too many minerals in it. Cistern water has few minerals and is ideal for washing clothes. A sealed well usually requires no filtration, chemical disinfection and little upkeep, while a cistern needs all of these. A cistern water supply has four basic parts: the catchment, filter, tanks and a pump.

The catchment or collecting area should be of watertight and smooth material, like a galvanized sheet-metal roof. Wood or thatch roofs may taint the water and retain dust, dirt and leaves with the result that water from these roofs contains more organic matter and bacteria. Stone, concrete and plastic film catchments are sometimes built on the ground. For family use, roofs usually work best as humans and animals cannot contaminate them.

To estimate your catchment area, the minimum yearly rainfall and the amount of water required by the family during one year, must be estimated. Sometimes, the government meteorological section can give you the minimum rainfall expected. If they do not, you can estimate the minimum rainfall at two-thirds of the yearly average. Take the average amount of water needed by the family for one day and multiply it by 365 to learn how much is needed for one year. Then use the chart to find how much roofspace is needed (Figure 1). Suppose you have a rainfall of 60 inches a year and the family needs 20 gallons a day, then...

2/3 x 60 equals a minimum rainfall of 40 inches a year

365 days x 20 gallons a day equals 7300 gallons a year

The chart shows that a catchment area of about 300 square feet is needed to supply the family with enough water for one year.

A collecting trough and downspout are needed. Be sure there is a good pitch to the trough so that the water flows freely and does not hold small puddles that can breed yellow-fever mosquitos, etc. Troughs and downspouts need periodic inspection and cleaning. If you extend the trough, it increases the catchment area.

Evaluation

The method provided here for estimating catchment size should be checked against the actual size of nearby catchment installations.

Material from... Cisterns, State of Illinois Department of Public Health circular no. 833

Individual Water Supply Systems U.S. Department of Health, Education and Welfare, Public Health Service Publication no. 24

Fig. 1 Cistern Catchment Yield

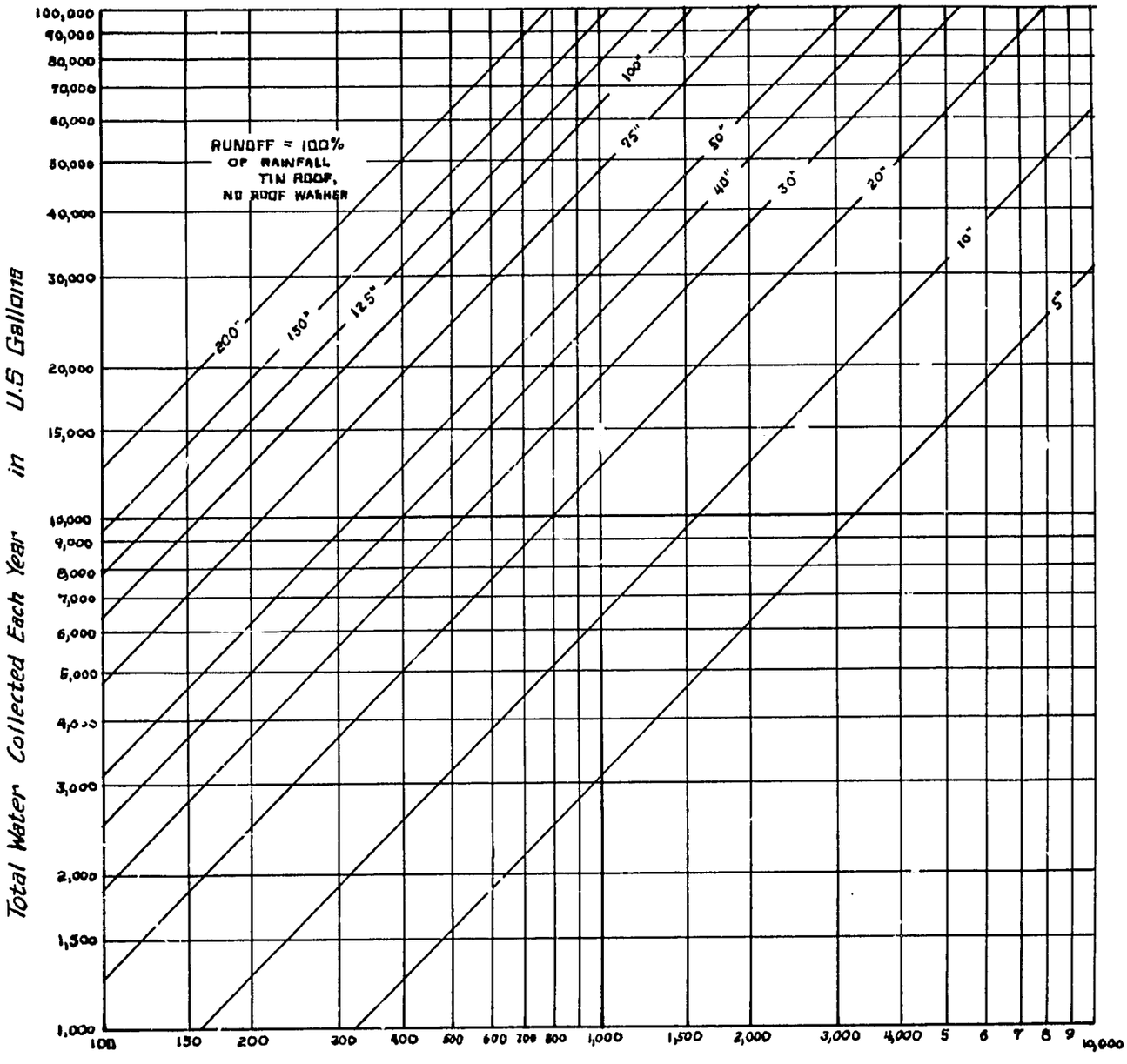

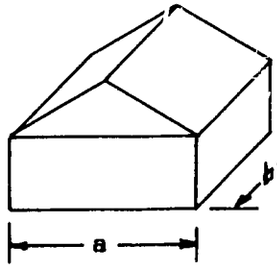

HORIZONTAL AREA OF ONE HALF OF THIS ROOF IS:

$\frac{1}{2} \times a \times b$

6/14/63
DJ

CISTERN FILTER

Abstract

This type of sand filter keeps organic matter from entering the cistern.

Tools and Materials

Tools and materials for making reinforced concrete
Screen
Fine, clean sand
Graded gravel
Asphalt sealing compound

Details

A catchment area always collects leaves, bird droppings, road dust, insects, etc. A cistern filter removes as much of these as possible before the water enters the cistern.

The sand filter is usually built at ground level and the filtered water runs into the cistern, which is mostly underground. The largest pieces, such as leaves, are caught in the splash plate. The splash plate also serves to distribute the water over the surface of the filter, so that the water does not make holes in the sand. A piece of window screen forms the splash plate.

Most filters are made too small to handle the normal rush of water from rainstorms. This results in the filter always overflowing or a channel being dug in the sand, which will ruin the filter. The filter area should be not less than one-tenth of the catchment area. A typical filter area would be 4 feet by 4 feet for a family-sized unit with average rainfall intensity.

About every 6 months, the manhole cover to the filter must be removed and the filter cleaned. Remove all matter from the splash plate and scrape off and remove the top half-inch of sand. When the depth of sand becomes only 12 inches, rebuild it with clean sand to the original depth of 18 inches.

A simple way to discard the first runoff from the roof, which is usually mostly leaves and dirt, should be provided. This will make your filter last longer between cleanings. The easiest way is to have a butterfly valve (like a damper in a stovepipe) in the downspout. After the rain has washed the roof, the valve is turned to allow the runoff water to enter the filter. A semi-automatic system is shown in Figure 2.

When building the filter, it is important to insure easy cleaning and to use properly-sized sand and gravel. The filter is usually mounted right on the cistern but can also be close to it. It must have a screened overflow.

Evaluation

This filter will remove most organic matter but cannot be depended upon to remove bacteria and produce safe drinking water.

Material from...Cisterns, State of Illinois, Department of Public Health, circular no. 833

Manual of Individual Water Supply Systems, U. S. Department of Health, Education and Welfare, Public Health Service publication no. 24

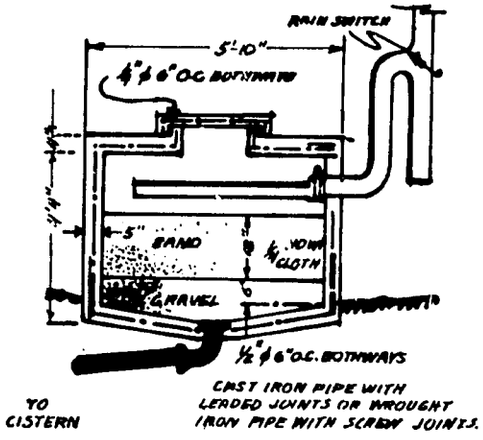

Fig. 1

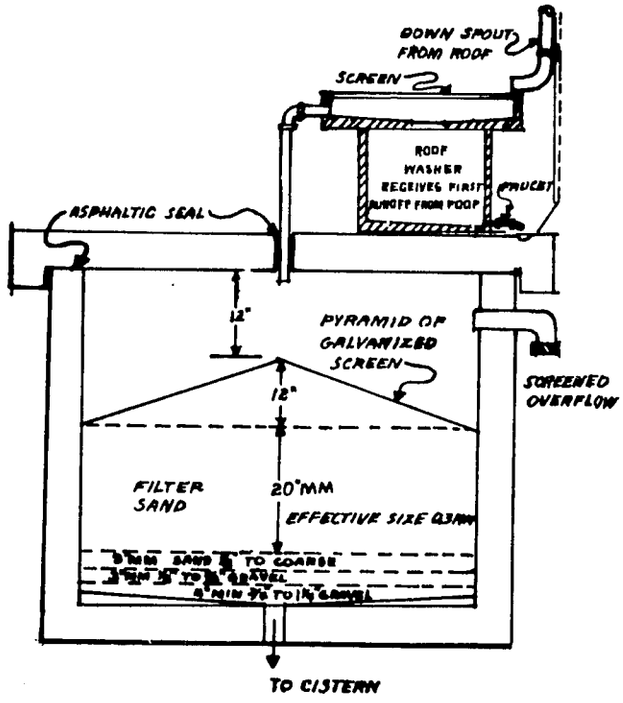

Fig. 2

SAND FILTER

Abstract

Sand filtration does not make polluted water safe for drinking. But a properly built and kept sand filter will prepare water for boiling or chlorination that will make it safe.

Tools and Materials

Steel drum at least 60 cm wide by 75 cm high (2 feet wide by 29½ inches high)

Sheet metal to make cover, 75 cm square (29½ inches square)
Three meters of wood, 5 cm x 10 cm (9.8 feet of wood, 2 x 4 inches)
Sand...one-fifth of a cubic meter (7 cubic feet)
Gravel
Blocks and nails
Pipe to attach to water supply
Optional...valve and asphalt roofing compound to treat drum

Details

Surface water, from ponds, streams or open wells is very likely to be contaminated with leaves and other organic matter. A trickling sand filter can remove most of this organic material but will always allow virus and other bacteria to pass through. For this reason it is always best to boil or chlorinate water after filtering.

There are several sand filters, but the trickling filter is easiest to set-up and understand. The trickling filter uses sand to strain the organic matter from the water, although this does not always stop small pieces of organic matter or bacteria. But in time, biological growth forms on the top six inches of sand. This slows down the flow of water through the sand but will trap more small organic matter and, at times, up to 95 percent of the bacteria. But if not operated correctly, the sand filter can actually add bacteria to the water.

By removing most of the organic matter, the filter...

- removes larger worm eggs, cysts, and cercariae, which are the hardest to kill with chlorine.
- allows the use of smaller and fixed doses of chlorine for disinfection, which results in drinkable water with less taste of chlorine
- makes the water look cleaner
- reduces the amount of organic matter, including living organisms and their food, and the possibility of recontamination of the water.

The unit shown in figure 1 should give about 1 liter of water a minute. The drum should be of heavy steel and can be coated with asphalt material so that it will last longer. The 2 millimeter hole at the bottom regulates flow and must not be made larger (slightly less than 1/13th of an inch).

It is important to use clean, fine sand, but not too fine. The sand should be able to pass through a window screen and it is best to wash it.

The following points are very important in assuring that your sand filter operates properly:

- keep a continuous flow of water passing through the filter and do not allow the sand to dry out, as this will destroy the microorganisms that form on the surface layer. The best way to insure a continuing flow is to fix the water intake so that there is always a small overflow. Screen the intake and provide a settling basin to help keep pipes from becoming plugged, which would stop the flow of water. This will also delay your having to clean the filter.

- never allow the filter to run faster than 2.7 liters of water a minute per square meter, as it will prevent the growth of microorganisms in the sand and wash them out through the outlet.

- keep light from the sand surface but allow air to circulate, as this will prevent the growth of green plant matter on the surface but help the growth of micro-organisms that aid the filtering action.

- when the flow drops below daily needs, clean the filter. This is done by scraping off and discarding the top centimeter (slightly less than ½ inch) of sand and lightly raking or scratching the surface. After several cleanings, the sand should be raised to its former height by adding clean sand. Before doing this, scrape the old sand down to a clean level. Cleaning should not be more often than every several weeks or even months.

Evaluation

Trickling sand filters provide clear water that must be boiled or treated with chlorine, and must be built properly and cleaned periodically.

Material from...WHO Monograph #42, Water Supply for Rural Areas and Small Communities, E. G. Wagner and J. N. Lanoix (1959)

TRICKLING SAND FILTER
Figure 1

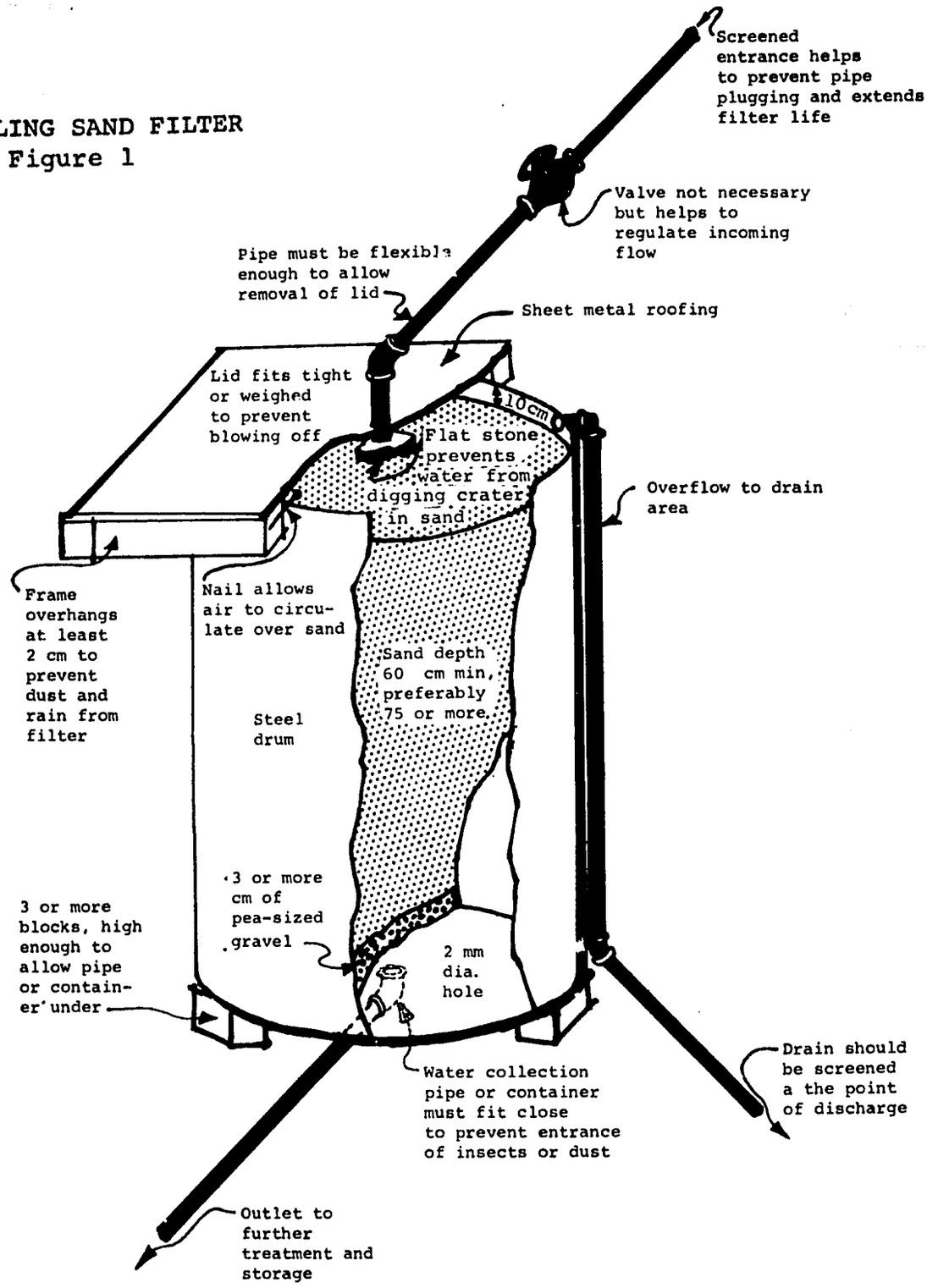

WATER PURIFICATION PLANT

Abstract

A crude water purification plant is described which uses laundry bleach as a source of chlorine. Although lacking the reliability of a modern water system, this manual plant will provide safe drinking water.

Tools and Materials

3 barrels, concrete tanks or 55-gallon drums
1 eight inch funnel or sheet metal to make a funnel
2 smaller tanks, about 5 gallon or 20 litres in size, equipped with float valves
4 shut-off valves
1 throttle or needle valve (clamps may be used instead of the valves, if hose is used)
some pipe or hose with fittings
hypochlorite of lime or sodium hypochlorite (laundry bleach)

Details

The water purifier should be made as in the drawing. The two large barrels on top of the structure are for weakening the bleach. The two smaller tanks on the shelf below are for holding equal amounts of weakened bleach solution and of water, at a constant pressure. This makes a constant flow of the solution and water, at the same speed, into the hoses leading to the mixing points. The mix is further controlled by the valves and may be seen through the open funnel. If a throttle valve is not available, a shut-off valve may be used and a throttle action obtained by this valve and valve #4 in series.

Placing the two barrels at a height of 10 feet causes a pressure of only about five pounds a square inch. Thus the plumbing does not have to be of high quality except for valve #1 and the float valve of the water holdup tank, if the rain water supply is under higher pressure.

Operation

- mix concentrated bleach with water in the concentrate barrel with all valves closed

- fill the pipe from the mixing barrel to the solution tank with water after having propped the float valve in a closed position

- allow a trial amount of concentrate to flow into the mixing barrel by opening Valve #2

- use the measuring stick to see how much concentrate was used

- close valve #2 and open valve #1 so that untreated water enters the mixing barrel

- close valve #1 and mix solution in the mixing barrel with a stick

- remove the prop from the float valve of the solution tank so that it will operate properly

- open wide the metering valve and valve #4 to clean the system. Allow a gallon (four litres) to drain through the system

  (steps 2, 8 and 9 may be omitted after the first charging of the system, if the pipe mentioned in the second step is not permitted to empty before recharging the mixing barrel)

- close down the metering valve until only a stream of drops enters the funnel

- open valve #3

Trial and error must be used to learn how much concentrate should be put in the concentrate barrel, the amount of concentrate to flow into the mixing barrel and the amount of solution to allow past the funnel. The result should be water with a noticeable chlorine taste in the distribution barrel.

The flow into the funnel and the taste of the water in the distribution barrel should be checked regularly to insure proper treatment.

Evaluation

Many factors in this system depend upon operating experience. When starting to use the system it is best to have the assistance of an engineer experienced in water supplies.

Material from...CARE, C. Ahrens

CHLORINATION SYSTEM

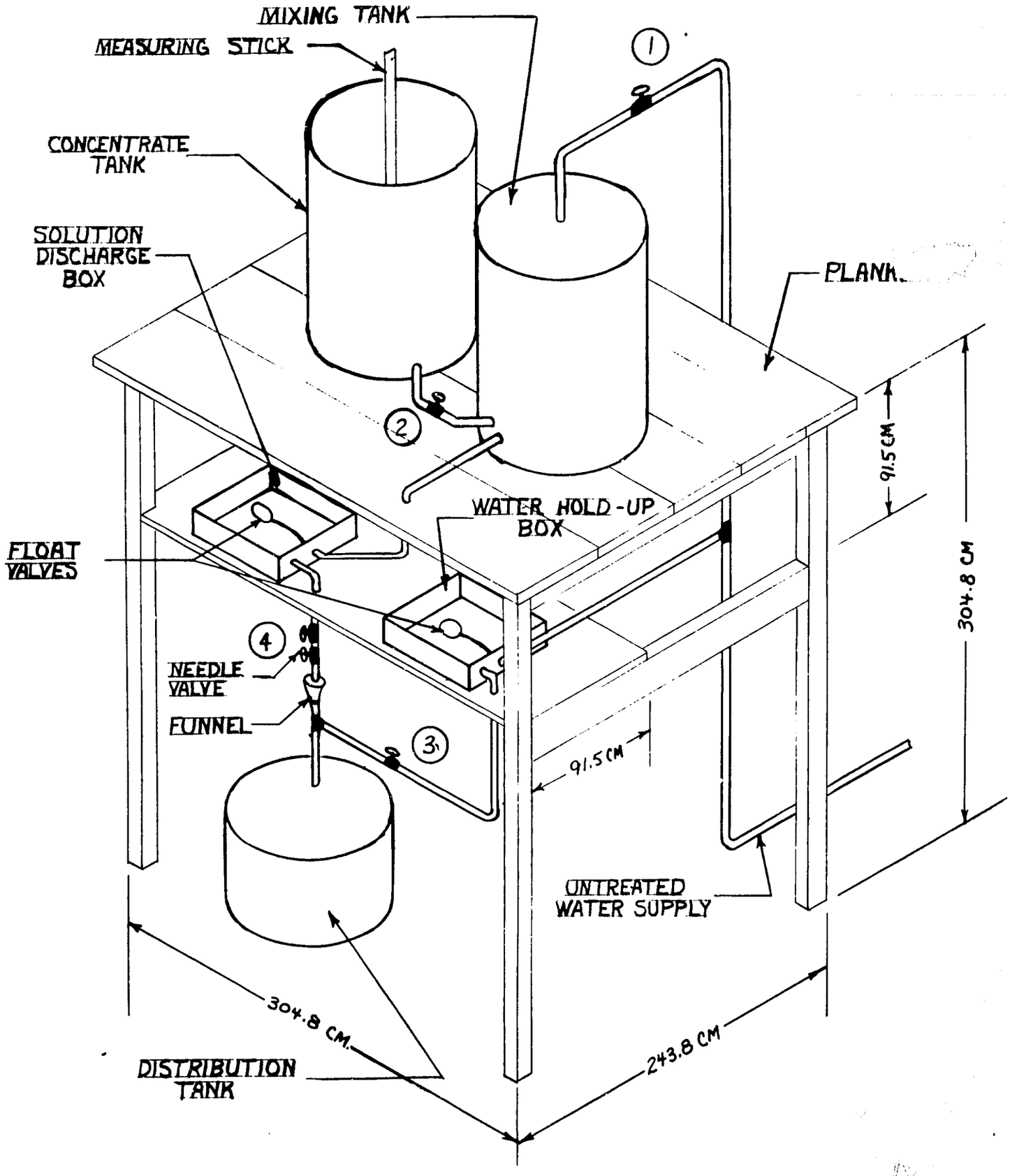

RECONSTRUCTION OF DUG WELLS

Abstract

Open dug wells can often be rebuilt by again lining the top 10 feet, digging and cleaning the well and covering it. Another method is to install a buried concrete slab behind the wall of the present well, clean and cover it to keep out surface water.

Tools and Materials

Tools and materials for reinforced concrete
A method for entering the well
Pump and drop pipe

Details

By providing a watertight lining to a depth of 10 feet, and digging and cleaning out, open wells can be rebuilt to provide pure water. The well should be covered with a sealed platform and manhole to keep out surface impurities and support the pump.

Before starting, check the following...

- is the well dangerously close to a privy or other source of contamination? Is it close to a water source? Is it desirable to dig a new well elsewhere instead of cleaning this one? Could a privy be moved, instead?

- has the well ever gone dry? Should you deepen it as well as clean it?

- surface drainage should generally slope away from the well and there should be effective disposal of spilled water.

- what method will you use to remove the water and what will it cost?

- before entering the well to inspect the old lining, check for a lack of oxygen by lowering a lantern or candle. If the flame remains lit, it is reasonably safe to enter the well. If the flame goes out, the well is dangerous to enter. When the well is entered, have a rope tied to the person and two strong men to pull him out in case of accident.

The first job is to prepare the upper 10 feet of the lining for concrete by removing loose rock and chipping away old mortar with a chisel, as deep as possible. The next task is to clean out and deepen the well, if that is necessary. All organic matter and silt should be bailed out. The well may be dug deeper, particularly during the dry season, with the methods outlined in the article on hand-dug wells. One way to increase the water yield is to drive a well point deeper into the water-bearing soil. This normally will not raise the level of water in the well, but may make the water flow into the well faster. The well point can be piped directly to the pump, but this does not make use of the reservoir capacity of the dug well.

The material removed from the well can be used to help form a mound around the well so water will drain away from the well site. Usually, additional soil will also be needed for this mound. A drain lined with rock should be provided to take spilled water away from the concrete apron that covers the well.

Reline the well with concrete troweled in place over wire mesh reinforcement. The largest aggregate should be pea-sized gravel and the mix should be fairly rich with concrete, using no more than 5½ to 6 gallons of water to a sack of cement. Extend the lining 70 cm (27½ inches) above the original ground surface.

Cast the well cover so that it makes a watertight seal with the lining. Extend the slab out over the mound a few feet to help drainage away from the site. Make a manhole and space for the drop pipe of the pump. Mount the pump off center so there is room for the manhole, putting the pump on bolts cast into the cover. The manhole must be four inches higher than the surface of the slab. The manhole cover must overlap by two inches and should be fitted with a lock to prevent accidents and contamination. Be sure that the pump is sealed to the slab.

Disinfect the well by washing the walls with a stiff brush and a very strong solution of chlorine. Then add enough chlorine in the well to make it about half the strength of the solution used on the walls. Sprinkle this last solution all over the surface of the well to distribute it evenly. Cover the well and pump up the water until the water smells strongly of chlorine. Let the chlorine remain in the pump and well for one day and then pump it until the chlorine is gone.

Finally have the well water tested several days after disinfection to be sure it is pure. Repeat the disinfection and testing, if it is not. If it still is not safe, get expert advice.

Evaluation

These methods are summarized from the current recommended techniques of WHO and the U.S. Department of Health.

Fig. 32. IMPROVEMENT OF EXISTING WELLS (I)

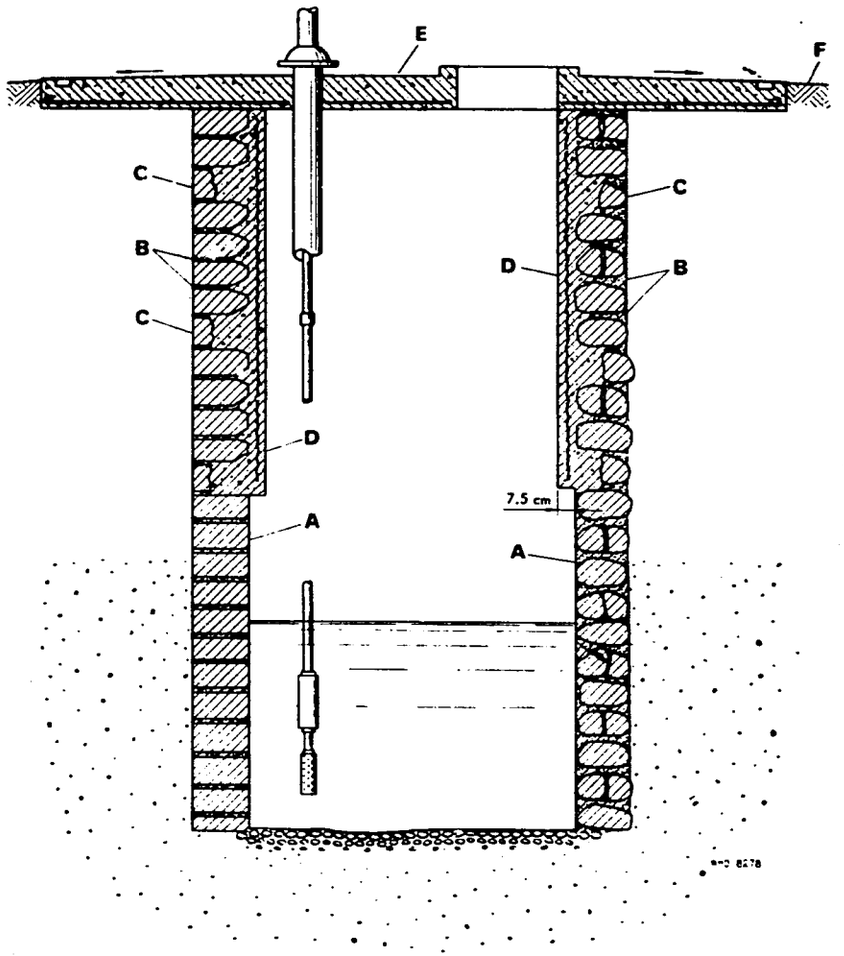

Fig. 32 (*continued*). IMPROVEMENT OF EXISTING WELLS (II)

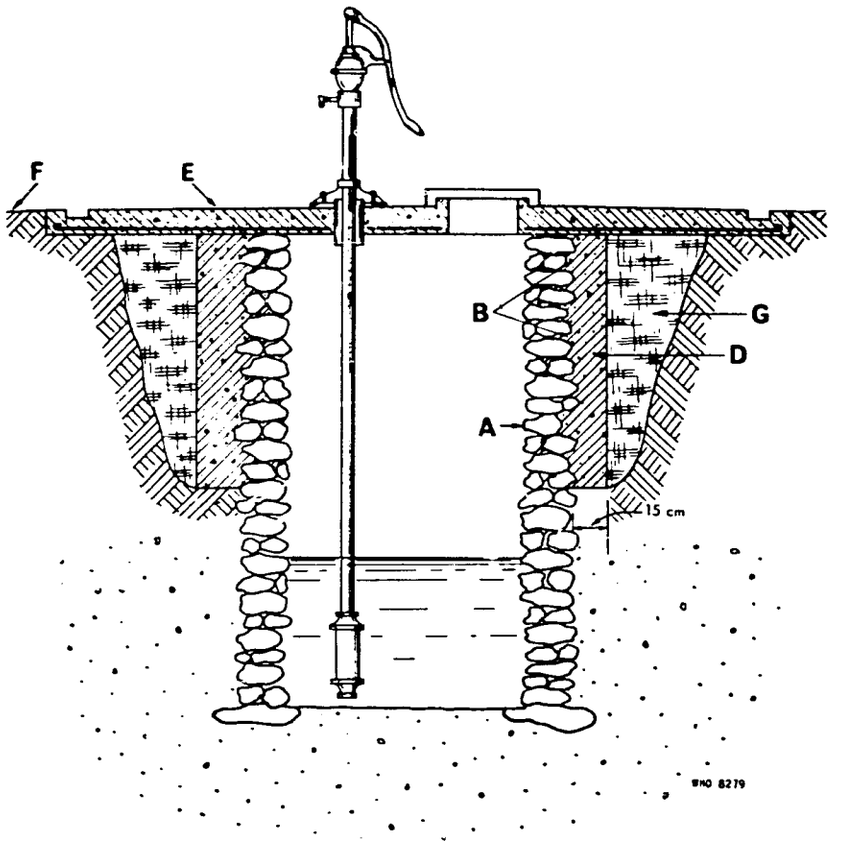

A = Existing masonry or brick walls with cracked mortar joints
B = Old mortar removed with chisel as far back as possible
C = Stone or bricks dug out to provide key for new concrete lining
D = New concrete lining, built to a depth of at least 3 m (10 ft) below outside ground level, or to low water level in well. For concrete, use pea-sized gravel and wire-mesh for temperature reinforcement.
E = New concrete well top, incorporating sanitary features (manhole with raised edges, slope for proper drainage, proper pump installation, etc.).
F = Outside ground level (adequate drainage being provided for excess water or surface run-off)
G = Backfill with clay, well tamped in layers 15 cm (6 in.) thick

Fig. 15. RECONSTRUCTED DUG WELL WITH BURIED SLAB

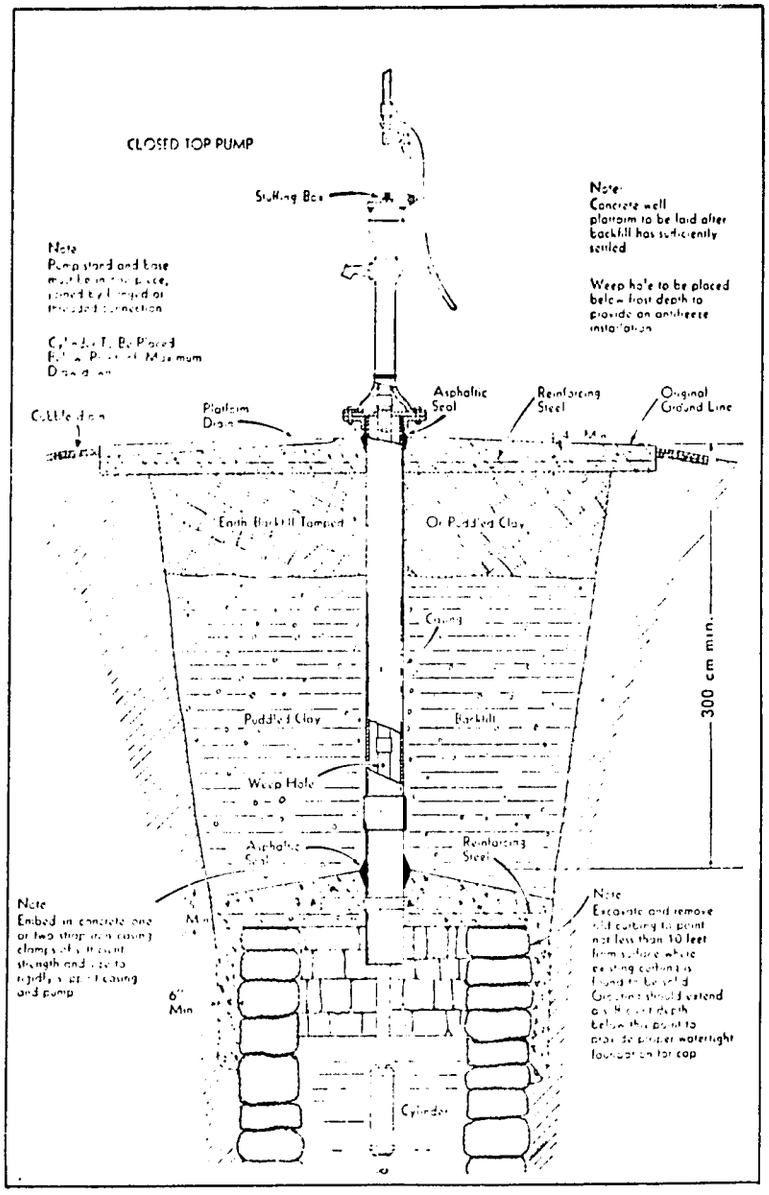

Material from...WHO Monograph #42, Water Supply for Rural Areas and Small Communities, E.G. Wagner, J.N. Lanoix (1959)

Manual of Individual Water Supply Systems, U. S. Department of Health, Education and Welfare, Public Health Service Publication No. 24

DEEP DUG WELL

Abstract

Simple, light equipment and untrained workers can safely make a deep, sanitary well if good supervision is provided. This paper outlines the basic method.

Tools and Materials

Shovels, mattocks
Buckets
Rope...deep wells require wire rope
Forms...steel, welded and bolted together
Tower with winch and pulley
Cement
Reinforcing rod
Sand
Aggregate
Oil

Details

The hand dug well is the most widespread of any kind of well. Unfortunately, most of these wells were dug by uninformed people and now are infected by parasitic and bacterial disease. By using modern methods and materials, dug wells can safely be made 60 meters (196.8 feet) deep and will give a permanent source of pure water.

Experience has shown that for one man, the average width of a round well for best digging speed is 1 meter (3¼ feet). However 1.3 meters (4¼ feet) is best for two men digging together and they dig more than twice as fast as one man. Thus, two men in the larger hole is usually best.

Dug wells always need a permanent lining (except in solid rock and here the best method is usually to drill a tubewell).

The lining prevents collapse of the hole, supports the pump platform, stops entrance of contaminated surface water, and supports the well intake which is the part of the well through which water enters. It is usually best to build the lining while digging, since this avoids temporary supports and reduces danger of cave-ins. Dug wells are lined in two ways; where the hole is dug and the lining is built in its permanent place and where sections of lining are added to the top and the whole lining moves down as earth is removed from beneath it. This is called caissoning. Often a combination of both is best, as shown in Figure 1.

If possible, use concrete as it is strong, permanent, made mostly of local materials, and can be handled by unskilled workers with good speed and results. Masonry and brickwork are widely used in many countries and can be very satisfactory if conditions are right. In bad ground, however, unequal pressures can make them bulge or collapse. Building with these materials is slow and a greater thickness of wall is required than with concrete. There is also always the danger of movement during construction in loose sands or swelling shale before the cement has set firmly between the bricks or stones. This danger is prevented with concrete by leaving the form in place to support the lining, until the concrete is hard. Also, skilled masons, suitable stone or well-fired bricks may not be readily available, while it is easy to train unskilled workers to place concrete, and sand and gravel can usually be found within reasonable distance of the wellsite. Wood and steel are not good as wood requires bracing, tends to rot and hold insects, as well as sometimes making the water taste badly. Worst of all, it will not make the well watertight against contamination. Steel is seldom used because it is expensive, rusts quickly, and usually is subject to bulging and bending.

The general steps in finishing the first fifteen feet are:

- set up a tripod winch over cleared, level ground and reference points for plumbing and measuring the depth of the well.
- two men dig the well while another raises and unloads the dirt until the well is exactly 15 feet deep.
- the hole is accurately trimmed to size using a special jig mounted on the reference points.
- the forms are carefully placed and filled one by one with tamped concrete.

After this is done, dig to 30 feet, trim and line this part also with concrete. A five inch gap between the first and second of these sections is filled with pre-cut concrete which is grouted in place. Each lining is self-supporting as it has a curb. The top of the first section of lining is thicker than the second section and extends above the ground to make a good foundation for the pump housing and to make a safe seal against ground water.

This method is used until the water-bearing layer is reached where an extra-deep curb is constructed. From this point on, caissoning is used.

Caissons are concrete cylinders fitted with bolts for attaching them together. They are cast and cured on the surface in special molds, prior to use. Several caissons are lowered into the

well and assembled together. Then a workman digs and the caissons drop lower as earth is removed from beneath them. The concrete lining guides the caissons.

If the water table is high when the well is dug, extra caissons are bolted in place so that the well can be finished by a small amount of digging and without concrete work, during the dry season.

Evaluation

Detailed plans and equipment for this process are found in WHO Monograph #42. The method has been widely used in Nigeria.

Material from...WHO Monograph #42
Water supply for rural areas and small communities...E.G. Wagner and J.N Lanoix (1959)

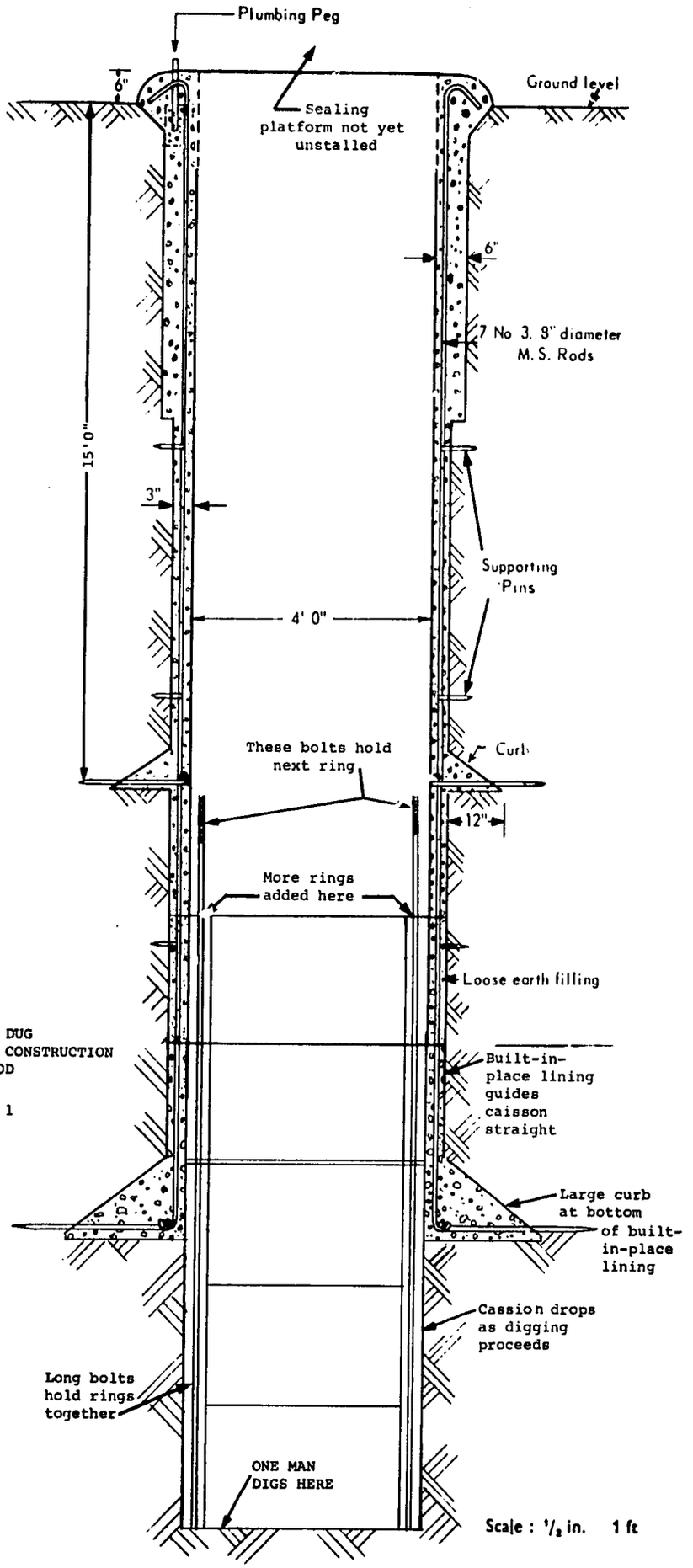

DEEP DUG WELL CONSTRUCTION METHOD

FIG. 1

DRIVEN WELL

Abstract

A pointed strainer called a well point, properly used, can quickly and cheaply drive a sanitary well, usually less than 25 feet deep.

Tools and Materials

Well point and driving cap...usually obtainable from the U. S. for about $10, through mail order houses
Pipe...3 cm (1 inch) diameter
Heavy hammer and wrenches
Pipe compound
Special pipe couplings and driving arrangements are desirable but not necessary

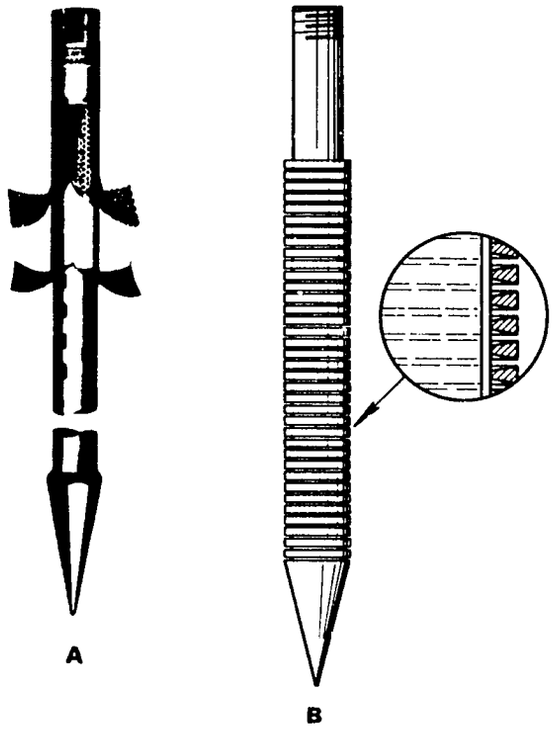

A = Common type of screen for well point. It is reasonable in cost and, in a good water bearing formation, it can give good results. Over-pumping is apt to plug up the screen.

B = An effective type of well point. It will not plug easily but is more expensive than common screens. With proper development, large quantities of water can be obtained through such well points.

Details

Driven wells are highly successful in coarse sand where there are not too many rocks and the water table is within 7 meters (23 feet) of the surface. They are usually used as shallow wells where the pump cylinder is at ground level. If conditions for driving are very good, 10 cm (4 inches) diameter points and casings that can accept the cylinder of a deep well, can be driven to depths of 10 to 15 meters (33 to 49 feet).

Before starting be sure the driving cap is tight, butted against the end of the pipe. Check to see that the pipe is vertical with a plumb bob. Test it occasionally and keep it straight by pushing on the pipe while driving. Hit the drive cap squarely each time or you may damage the equipment.

There are several methods that help avoid damage to the pipe. Least destructive is to drive with a steel bar that is dropped inside the pipe and strikes against the inside of the steel well point. It is retrieved with a cable of rope. Once water enters the well, this method does not work.

Another way is to use a driver pipe, which insures hitting the drive cap squarely. A guiderod can be mounted on top of the pipe and a weight dropped over it, or the pipe itself used to guide a falling weight which strikes a special drive-clamp. See Figure 2.

Figure 3 is a table which will help identify the formations being penetrated. Experience is needed...but this may help you to understand what is happening.

When you feel that the water-bearing layer has been reached, stop driving and attach a handpump to try the well. Usually this is shown by easier driving, especially in coarse sand. If the amount of water pumped is not enough, try driving a few feet more. If the flow decreases, pull the point back until the point of greatest flow is found. The point can be raised by using a lever arrangement like a fence-post jack, or, if a drive-monkey is used, by pounding the pipe back up.

Sometimes sand and silt plug up the point and the well must be 'developed' to clear this out and improve the flow. First try hard, continuous pumping at a rate faster than expected. Mud and fine sand come up with the water, but this should clear in about an hour. It may help to allow the water in the pipe to drop back down, reversing the flow periodically. With most pitcher pumps this is easily accomplished by lifting the handle very high, which opens the check valve, allowing air to enter and the water rushes back down the well.

If this does not clear up the flow, there may be silt inside the point. This can be removed by putting a 3/4 inch pipe into the well and pumping on it. Use the pitcher pump or else quickly and repeatedly raise and lower the 3/4 inch pipe. By holding your thumb over the top of the pipe on the upstroke, a jet of muddy water will result on each downstroke. After getting most of the material out, return to direct pumping. Clean the sand from the valve and cylinder of pump after developing the well. If you have chosen too fine a screen, it may not be possible to develop the well successfully. A properly chosen screen allows the fine material to be pumped out, leaving a bed of coarse gravel and sand that provides a highly porous and permeable water-gathering area.

Well points usually are of two types...

- a slotted steel pipe with no covering screen, which allows more water to enter but is less rugged

- a pipe with holes covered by a screen and a brass jacket with holes. For general use, a #10 slot or 60 mesh is recommended. Fine sand requires a finer screen, perhaps 90 mesh or a #6 slot

Before starting to drive the point, make a hole at the site with handtools. In heavy soils, particularly clay, an earth auger is faster than driving. The hole should be plumb and have a diameter slightly larger than the well point.

The joints must be carefully made to prevent thread breakage and assure airtight operation. Clean and oil the threads carefully and use joint compound and special drive couplings when available. To insure that joints stay tight, give the pipe a fraction of a turn <u>after</u> each blow, until the top joint is permanently set. Do not twist the whole string and do not twist and pound at the same time. The latter may help get past stones, but soon will break the threads and make leaky joints.

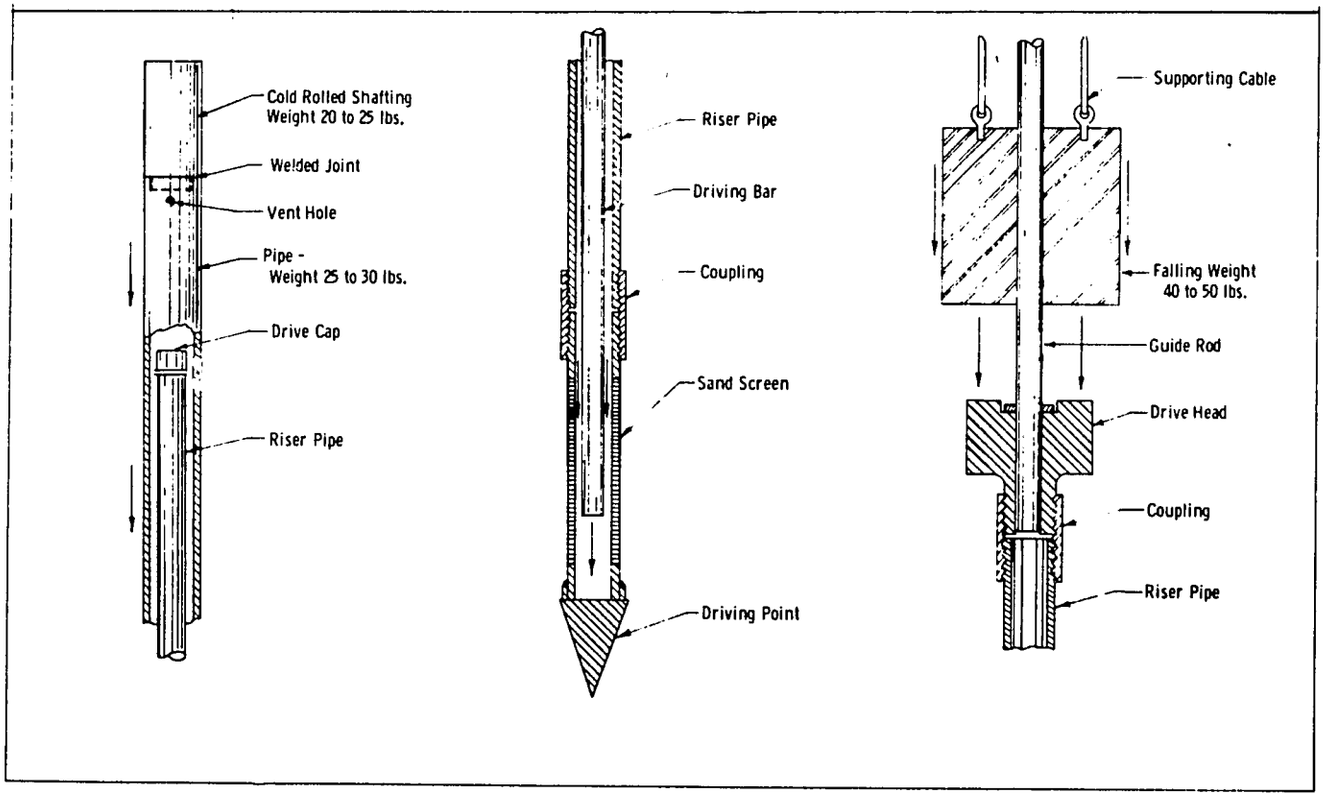

DRIVING METHODS.

The final step is to fill in the starting borehole with puddled clay or, if clay is not available, with well-tamped earth. Make a solid, waterproof pump platform (concrete is best) and provide a place for spilled water to drain away.

Evaluation

In soils where the driven well is suitable, it is often the fastest and most economical way to dig a sanitary well.

Material from...WHO Monograph #42, Water Supply for Rural Areas and Small Communities.

Figure 3 Identification of Formation Being Penetrated

Type of formation	Driving conditions	Rate of descent	Sound of blow	Rebound	Resistance to rotation
Soft moist clay	Easy driving	Rapid	Dull	None	Slight but continuous
Tough hardened clay	Difficult driving	Slow but steady	None	Frequent rebounding	Considerable
Fine sand	Difficult driving	Varied	None	Frequent rebounding	Slight
Coarse sand	Easy driving (especially when saturated with water).	Unsteady irregular penetration for successive blows	Dull	None	Rotation is easy and accompanied by a gritty sound
Gravel	Easy driving	Unsteady irregular penetration for successive blows	Dull	None	Rotation is irregular and accompanied by a gritty sound
Boulder and rock	Almost impossible	Little or none	Loud	Sometimes of both hammer and pipe	Dependent on type of formation previously passed through by pipe

from: Wells, TM5-297/AFM 85-23, 1957
· Army Technical Manual, P. 24

A SANITARY ROPE AND BUCKET WELL

Abstract

This sanitary well is simple to understand and maintain, but requires a fairly large structure built on top of the well.

Tools and Materials

Concrete...one half of a cubic meter (.654 cubic yards)
Steel pipe...2.5 cm x 2 meters (1 inch x 3¼ feet)
Two elbows
Rot resistant wood for handle, drum bearings, guide bar
Steel rod or pipe for stop hook
Rope
Bucket

Details

The basic plan is shown in the drawing. Details can be changed to fit local conditions. The first step is to improve the present well. Try to keep the dimensions small to conserve work and materials.

The cover should be removable; a concrete slab four inches thick and three feet in diameter can be moved by two men.

In order to prevent pollution, a well must stop the entrance of all surface water. For this reason, the walls and top must be solid, watertight material. Concrete is usually best for this.

Evaluation

The main advantage of this well is its simple mechanism. When carefully built, it will give good service and remain unpolluted.

Material from...WHO MONOGRAPH # 42, WATER SUPPLY FOR RURAL AREAS AND SMALL COMMUNITIES, BY E. G. Wagner, J. N. Lanoix (1959)

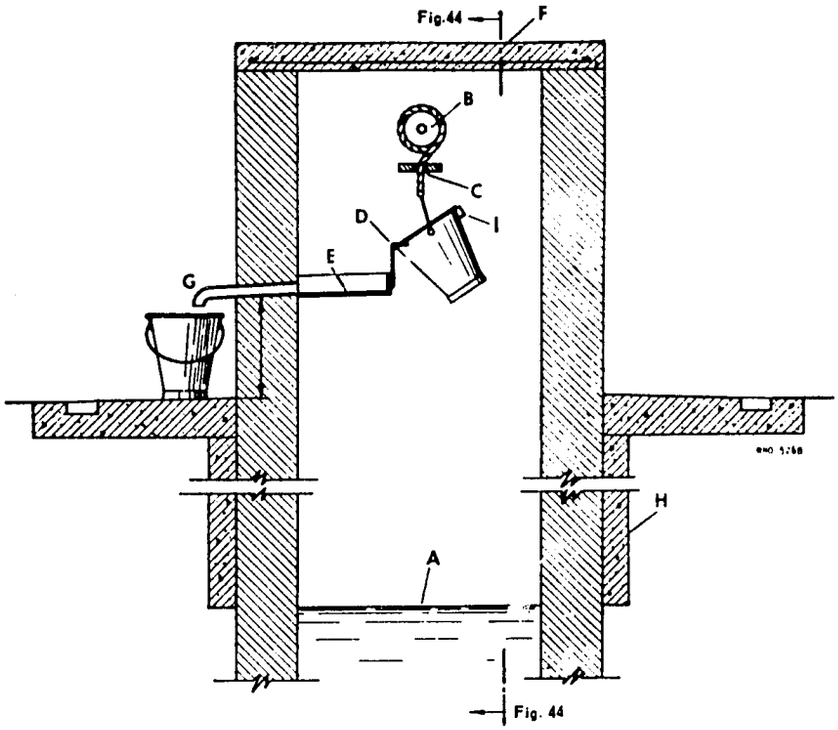

A = Water level in well
B = Windlass
C = Guide hole for rope
D = Stop hook
E = Trough
F = Tight cover, removable
G = Discharge opening
H = Compacted clay, or concrete grout
I = Weight attached to top side of bucket to make it tilt when bucket is lowered onto water surface

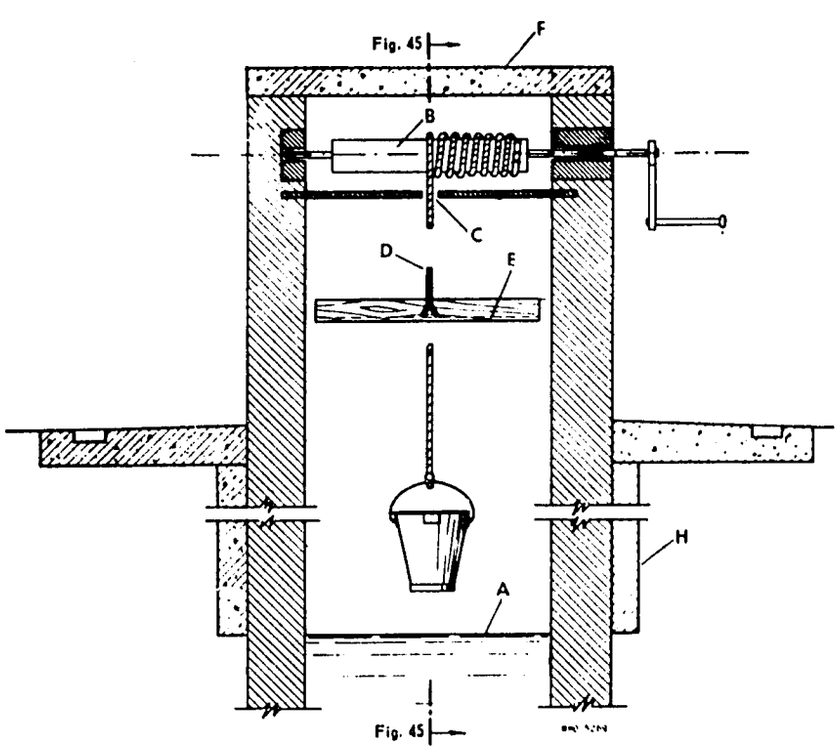

A = Water level in well
B = Windlass
C = Guide hole for rope
D = Stop hook
E = Trough
F = Tight cover, removable
H = Compacted clay, or concrete grout

DETERMINATION OF WATER FLOW WITH KNOWN PIPE SIZE AND RESERVOIR HEIGHT AND LOCATION

Abstract

This chart helps determine the flow of water from several sizes of pipe when you know the height of the water source.

Materials

Straight edge

Details

The nomograph applies to steel pipe. The hand book entry entitled "Flow Resistance of Pipe Fittings" should be used to find the equivalent pipe length. The length of pipe run can be paced off. One can crudely sight with their eyes and attempt measuring the reservoir height. To make this measurement with any accuracy requires some type of surveyor's instrument.

To use the nomograph, first find the number of pipe diameters there are in the pipe lengths. This is accomplished by dividing the pipe diameter in inches into 12 x pipe lengths in feet or the pipe diameter in centimeters into 100 x the pipe length in meters.

Then with the straight edge connect the pipe diameter on the d scale in inches (1 inch = 2.54 cm) with the reservoir height in feet on the h scale. Mark on the index scale where the straight edge crosses. Now connect this point on the index with the number of pipe diameters in the pipe length as calculated and observe the reading on the Q scale. This will be the discharge in gallons per minute.

EXAMPLE:

Assume a reservoir height of 30 feet, a pipe size of 1½" diameter and 100 feet in pipe length, what will the discharge rate be?

First divide the length by the diameter each in inches

$$\frac{1200}{1.5} = 800$$

now convert 1.5 on the d scale with 30 feet on the h scale and make a mark on the index scale. Connect this mark with 800 on the L/D scale and read the flow as 60 gallons per minute on the Q scale.

Material adopted from Crane Company, Technical Paper #407, pp. 54, 55

DISCHARGE OF WATER TO ATMOSPHERE

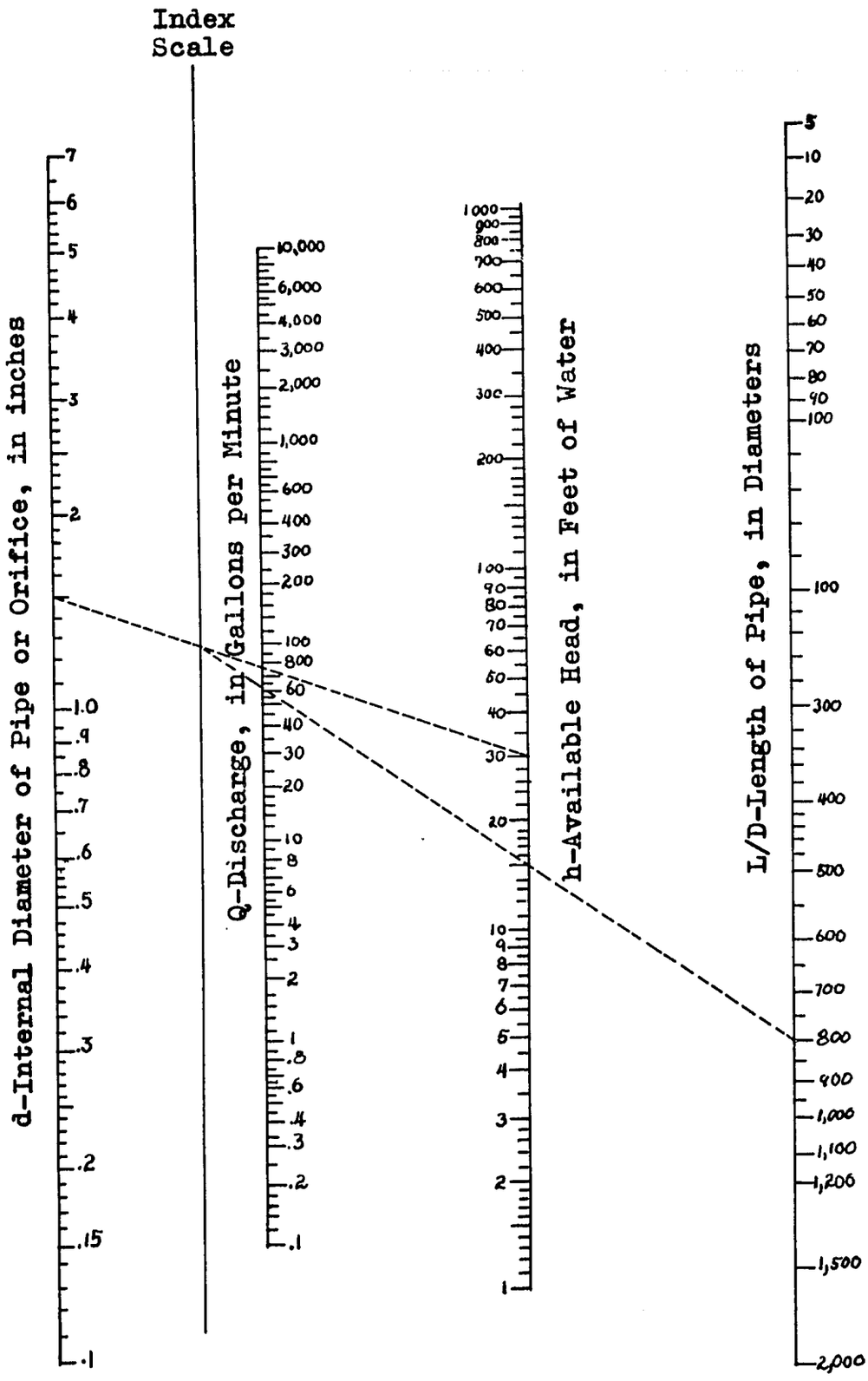

ESTIMATING SMALL STREAM WATER FLOW

Abstract

Here is a rough but very rapid method of estimating water flow for small streams.

Tools and Materials

Timing device, preferably watch with second hand
Measuring tape
Wood chip or twig (See Evaluation)
Stick for measuring depth

Details

In searching for water supplies, either for drinking, irrigation, or power generation, one should survey all the streams available. When searching for sources that will be used over a long period, it is necessary to collect information throughout the year to determine flow changes -- especially high and low flows. The number of streams that must be used and the flow variations are important factors in determining the necessary facilities for utilizing the water. Here is a way to survey a water supply problem quickly by allowing you to take rapid flow measurements.

The equation for stream flow is --- $Q = K \times A \times V$

Q = flow in gallons per minute (8.33 pounds = 1 gallon)

A = cross section of stream, perpendicular to flow, in square feet

V = stream velocity, feet per minute

K = a corrected conversion factor since surface flow is normally slower than average flow. For normal stages use K = 6.4; for flood stages use K = 6.7 to 7.1

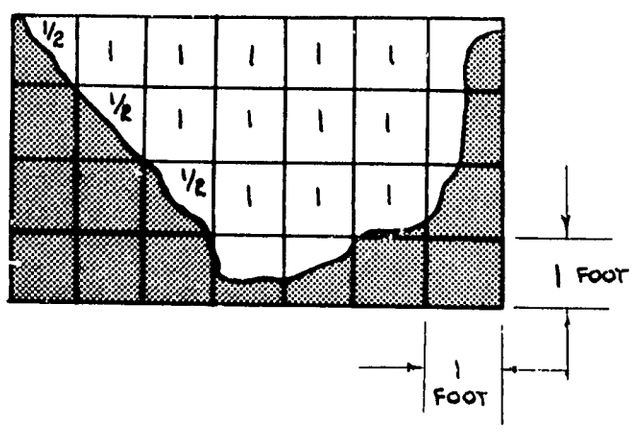

To find 'A'...the stream will probably have different depths along its length so select a place where the depth of the stream is average...take a measuring stick and place it upright in the water about one foot from the bank...note the depth of water...move the stick two feet from the bank in a line directly across the stream ...note the depth...move the stick three feet from the bank, note the depth, and continue moving it at one-foot lengths until you cross the stream. Note the depth, each foot, as you place it upright in the stream. Draw a grid, like the one above, and mark the varying depths on it so that a cross-section of the stream is shown. A scale of one inch equals one foot is often used for such grids. By counting the grid squares and fractions of squares, the area of the water can be estimated. For example, the grid shown here has about 15 square feet of water.

To find 'V'...put a float in the stream and measure the distance of travel in one minute (or fraction of a minute, if necessary.) The width of the stream should be as constant as possible and free of rapids, when measuring the velocity.

Example:

Cross section is 15 square feet
Velocity of float = 20 feet traveled in ½ minute
Stream flow is normal

$$Q = 6.4 \times 15 \times \frac{20 \text{ feet}}{.5 \text{ minute}}$$ 3800 gallons a minute

Evaluation

A surface float, such as a chip, will often change course because of wind or surface currents. A weighted float that sits upright in the water will not change course so easily. A lightweight

tube or tin can, partly filled with gravel so that it floats upright with only a small part showing above water, will not change course so easily and makes a better float for measuring. For a wide, irregular stream, it is better to divide the stream into 5 or 10 foot strips and measure the average area and velocity of each. Q is then calculated for each strip and the Qs added together to give a total flow.

Material from...Design of Fishways and
Other Fish Facilities
by C. H. Clay, P. E.
Department of Fisheries
Of Canada, Ottawa, 1961

SELECTING A DAM SITE

Abstract

This paper tells how to determine whether or not a selected site may be usuable for building a dam. If this preliminary evaluation shows the site has good possibilities, consult an authority before building the dam.

Tools and Materials

Maps
Rainfall data

Details

A dam that holds more than a few acre feet of water (1 foot of water ((30 cm.)) covering 1 acre of land((0.4 hectares)) equals one acre foot of water) can be dangerous if the dam breaks. It also requires time, labor, materials and money to build a dam. Thus it is wise to be careful in selecting a dam site and to guard against dam collapse, excessive silting, lack of water because of a small catchment area, porous soil, polluted water, etc.

Site selection includes 6 points:

1. Enough water to fill the reservoir.
2. Maximum water storage with the smallest dam.
3. A sound foundation and leak-proof reservoir.
4. Reasonable freedom from pollution.
5. A storage site close to users.
6. Available materials for construction.

The annual rainfall and type of catchment will determine the amount of water which the reservoir will receive. A catchment with steep slopes and rocky surfaces is very good. If the catchment is of porous soil over a leak-proof rock base, springs will develop and carry the water to the reservoir, but more slowly than rocky slopes. This holdup can actually enlarge the reservoir. Trees with small leaves, such as conifers, are desireable near the reservoir as they act as windbreaks and reduce loss of water from evaporation. Swamps, heavy vegetation, pervious ground, slight slopes are all detrimental to a good yield of water from the catchment.

The average catchment area will drain five acre feet of water into the reservoir, during the year, for every inch of annual rain-

fall falling on a square mile of catchment, i.e., about 10 percent of the rain.

The best location for building a dam is where a broad valley narrows with steep sides and a firm base on which to build the dam. Ground containing large boulders cannot be used. Weathered or fissured bedrock, alluvial sands and porous rocks also are not good. The best bases for building a dam are granite or basalt layers at or near the surface or a considerable depth of silty or sandy clay.

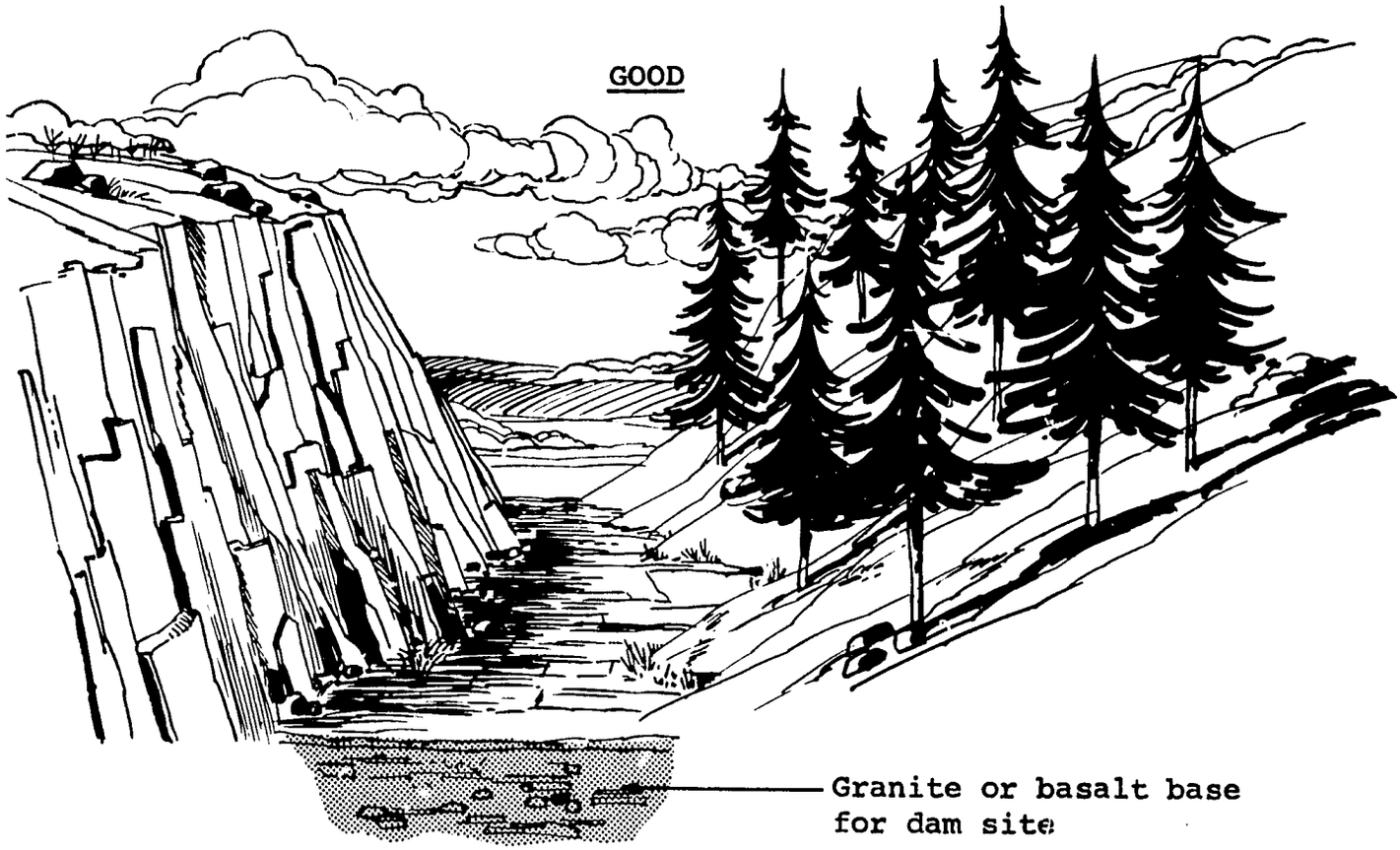

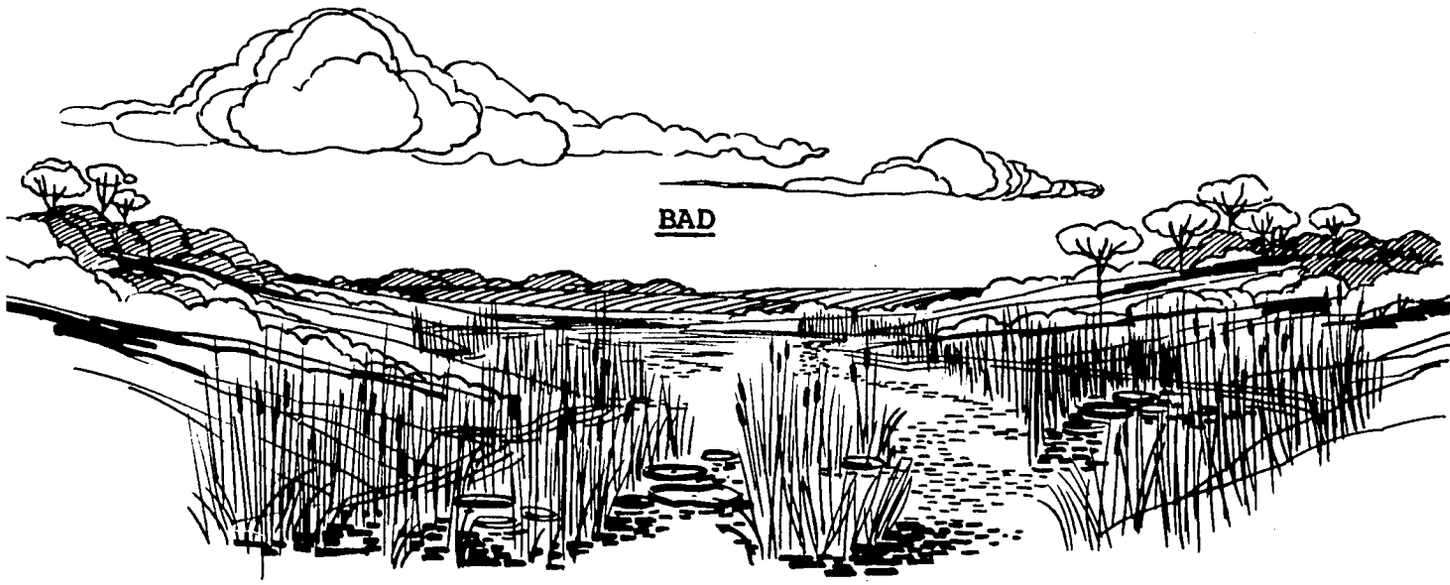

Location of the dam upstream from its point of use can lower pollution and may allow for gravity feed of the water to its point of use.

It is best if stone is nearby when building a masonry dam. When building an earthen dam, rock will still be required for the spillway. The best soils to use for earth dams contain clay with some silt or sand. There should be enough of this soil close to the dam site for building the entire dam of reasonably uniform material.

Careful selection of the dam site will save labor and material costs and help insure a strong dam.

Evaluation

A careful preliminary investigation, using the above guides, will form a strong basis for discussion with an expert and encourage him to inspect the proposed site.

Material from: "Water Supply for Rural Areas and Small Communities" by E. G. Wagner and J. N. Lanoix, World Health Organization, Geneva, 1959

WATER LIFT

Abstract

This device will raise water to any desired height. Its construction needs only rope, wood and hand tools. There are no exact dimensions, finishes or fits.

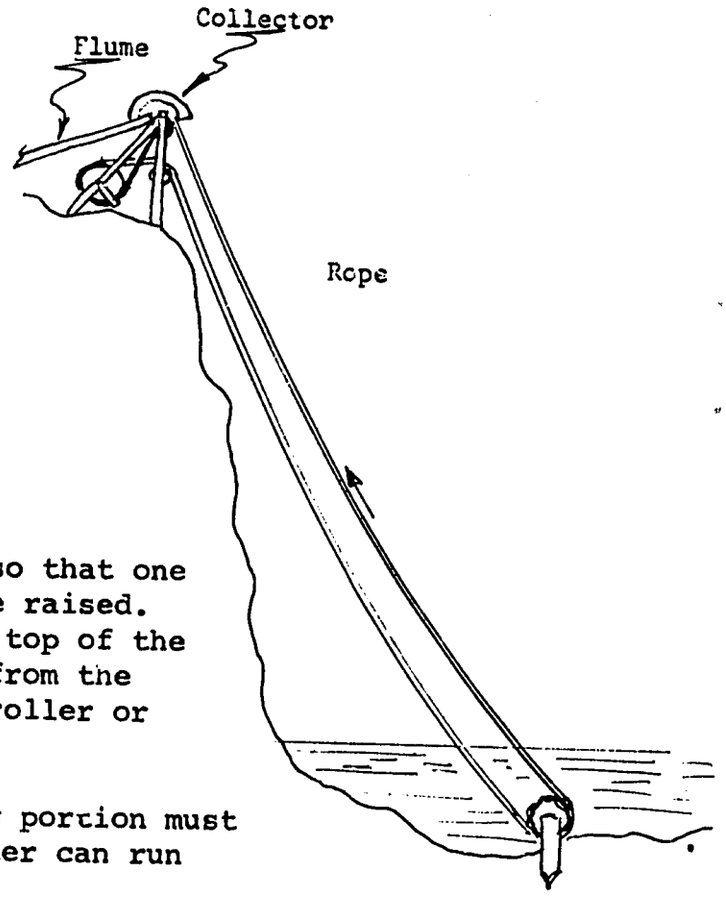

Tools and Materials

Hand axe, machete or saw
Knife
Wood
Rope to fit height of lift

Details

A continuous rope is placed so that one part is held below the water to be raised. A crank and drum is placed at the top of the rise, or lower, to turn the rope from the water supply up and over a small roller or pulley.

As the rope turns, the rising portion must travel upwards faster than the water can run down the rope.

When the rope bends over the small roller or pulley , it throws the water from the rope. A splash collector is fixed so that the water falls in it for use as needed.

Any source of power can be used to turn the rope...hand, tread mill, water wheel, ox driven capstan, bicycle, etc. The one important point is that the rope must travel upwards faster than the water can run down the rope. The size of the driving drum can be changed to make the rope move faster. As an example, the size of an ox-turned capstan would have to be larger than a drum turned by a gasoline engine.

The shafts and drums do not have to be smooth, perfect in shape or of any given length. But the supporting framework does have to be strong. Grease should be used where the shafts turn in the supporting framework. Animal fat is good for this.

There is no limit to the height that you can raise water. If you want more water, you can use thicker rope, two ropes or a flat leather belt.

Evaluation

A model was built using a bicycle, with the rear tire removed, for power. Using a 3/4 inch rope, about 20 gallons of water was lifted 63 feet each minute. The power source can be placed anywhere in the descending loop or at the top.

Material from...Douglas MacGregor, Terralab and Volunteers for International Technical Assistance, Schenectady 4, N. Y.

CHAIN PUMP FOR IRRIGATION

Abstract

This is an irrigation pump using power by man or animal. The lift usually is about 6 meters (20 feet) and is limited chiefly by the force available from the man or animal. The water source must have a depth of about five chain links.

Tools and Materials

Welding or brazing equipment
Metal cutting equipment
Woodworking tools
Pipe, four inches inside diameter (10 cm), length as needed
Pipe, two inches outside diameter (5 cm), length as needed
Chain links of about 5/16 inch (7.9 mm) diameter as needed
Sheet steel, 1/8 inch (3mm) thick
Sheet steel, ¼ inch (6 mm) thick
Steel rod, 5/16 inch diameter (7.9 mm)
Steel rod, ½ inch diameter (12.7 mm)

Details

The entire chain pump is shown in Figure 1. Details of this pump can be changed to fit materials available and structure of the well. The chain may be made or purchased. The piston links (see Figures 2, 3, 4, and 5) are made from three parts...

- a leather washer (see Figure 2) with an outside diameter about two thicknesses of a washer larger than the inside diameter of the pipe.
- a piston disc made according to Figure 3.
- the retaining plate made according to Figure 4

The piston link is made as shown in Figure 5. Center all three parts, clamp them together temporarily, drill a hole about ¼ inch in diameter through all three parts and fasten together with a bolt or rivet.

The winch is built as shown in Figure 1. The two steel discs are welded to the pipe shaft. Twelve steel rods, ½ inch (12.7 mm) thick, are spaced at equal distances, at or near the outside diameter and are welded in place. The rods may be laid on the outside of the discs, if desired.

A crank and handle of wood or metal is then welded or bolted to the winch shaft.

The supports for the winch shaft (see Figure 1) may be v-notched to hold the shaft, which will gradually wear its own groove. A strap or block across the top may be added, if needed, to hold the shaft in place.

A flange which is threaded or welded to the upper end of the pipe provides support for the pipe. The flange should be 5/16 or 3/8 inches thick (8 mm to 10 mm). The pipe, passing through a hole in the bottom of the trough, thus hangs from the trough into the well as shown in Figure 6.

Evaluation

This is primarily a shallow well pump. The pump capacity at any particular lift is proportional to the square of the diameter as is the power requirement. At any particular diameter, the power table illustrates what might be expected from a 10 cm (4" diameter) tube operated by four men working in two shifts.

LIFT	QUANTITY
6 meters (18 feet)	11 meters ^{3}/hr. (2906 gallons/hour)
3 meters (9 feet)	20 meters ^{3}/hr. (5284 gallons/hour)
1.5 to 2 meters (4.5 to 6 feet)	25-30 meters ^{3}/hr. (6605 to 7926 gallons/hour)

further information may be obtained from the publication "Water Lifting Devices" published by the Food and Agricultural Organization of the United Nations. Since this pump is difficult to seal, it is intended for use as an irrigation pump.

Material from - Robert G. Young, New Holland Chapter, VITA Participant.

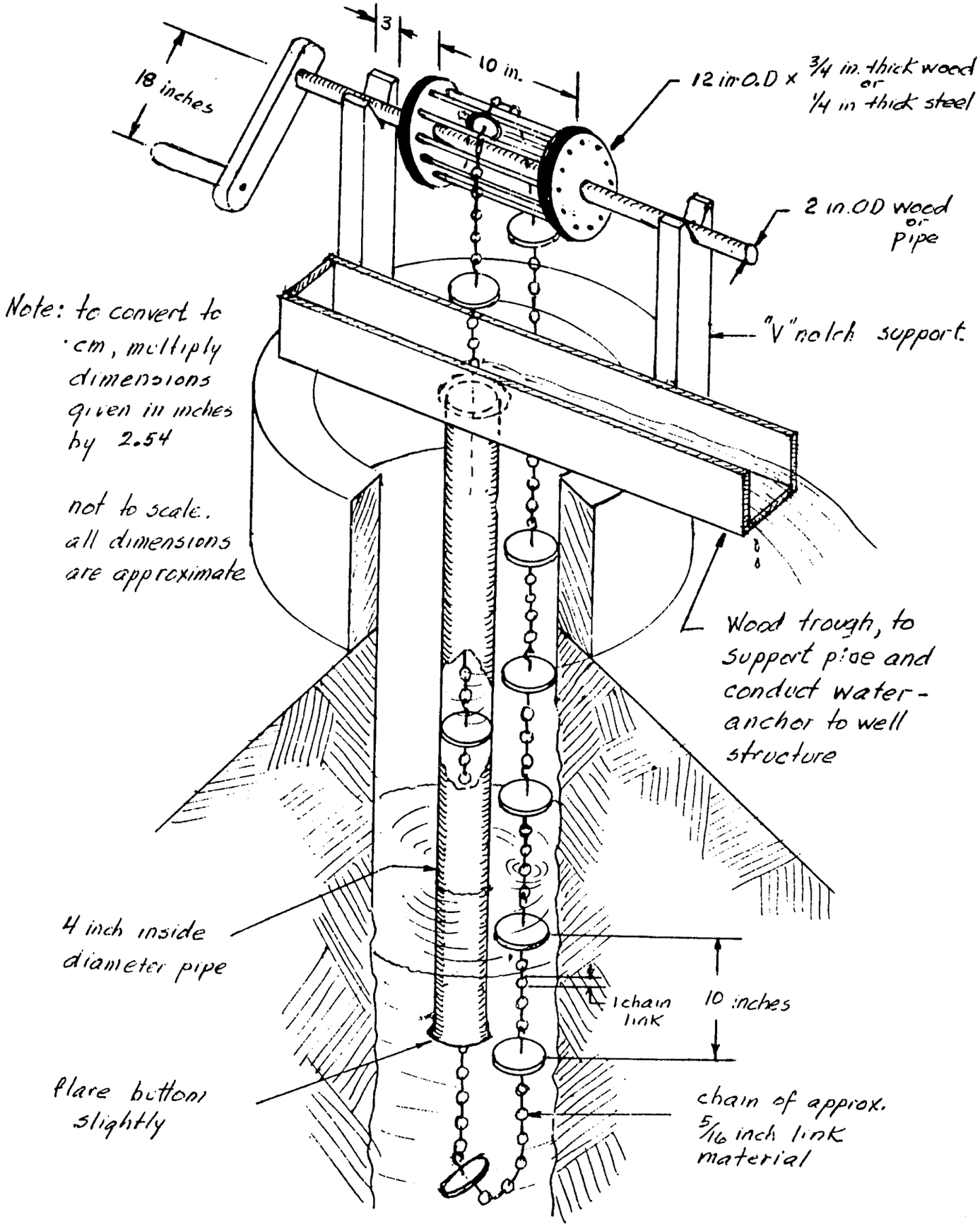

FIG 1 - CHAIN PUMP

FIG 3 - Steps in making piston disk

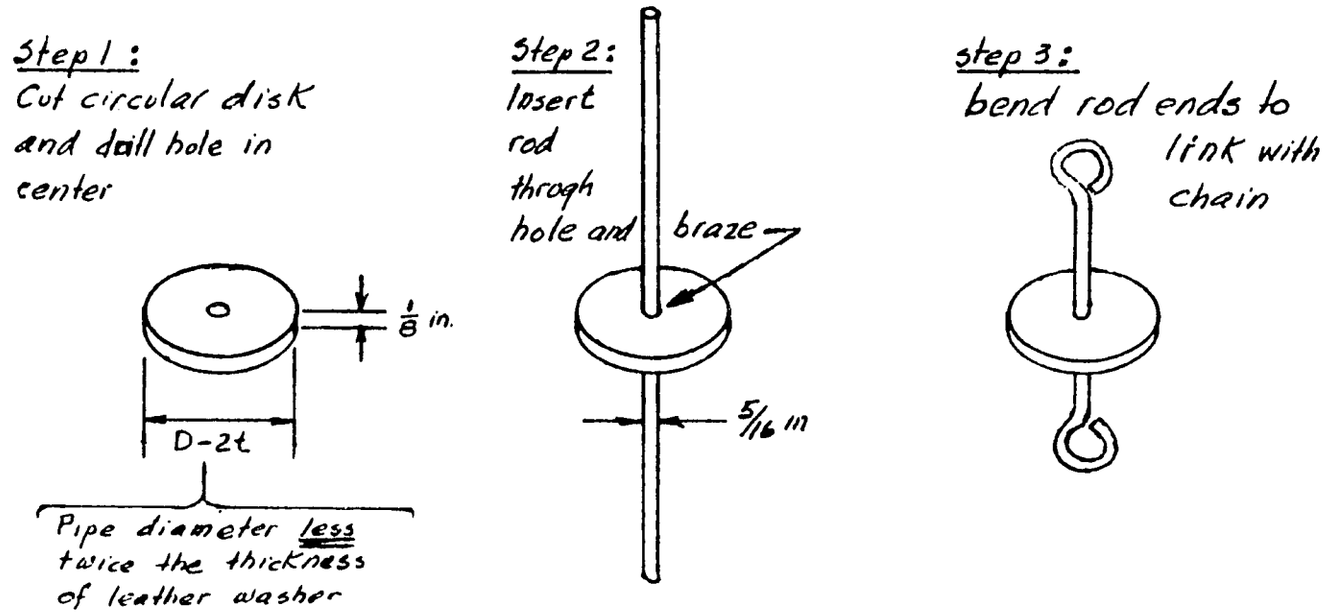

FIG 2 - Leather Washer

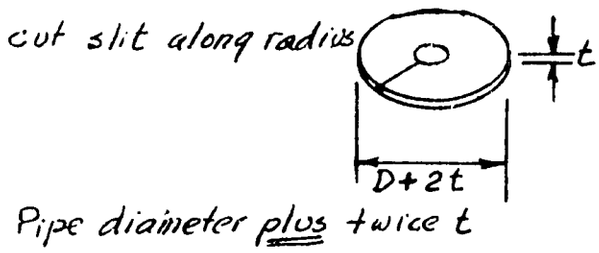

FIG 4 - Retaining Plate

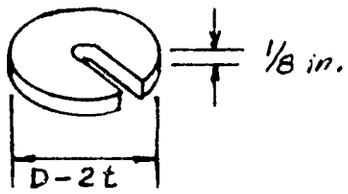

FIG 5 - Piston Link Assembled

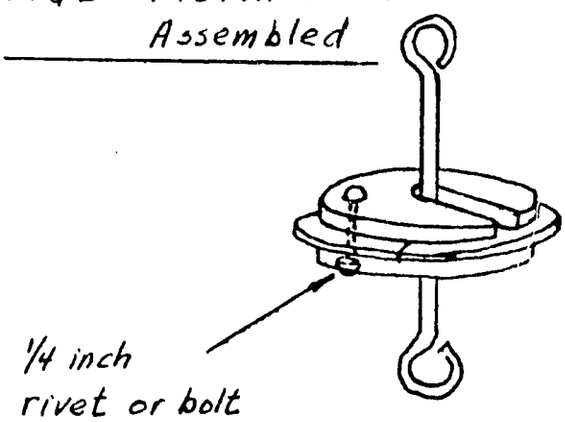

FIG. 6 - Pipe Support

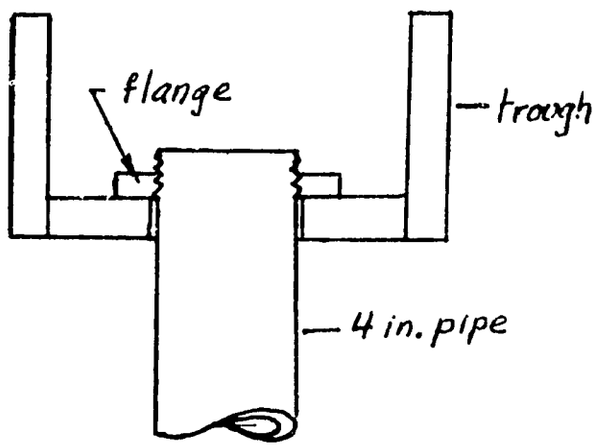

ESTIMATING PADDLE WHEEL POWER

Abstract

This chart will give you a quick estimate of the most power that can be obtained from a paddle wheel without constructing a dam or spillway.

Tools and Materials

Twig or chip
Watch with second hand
Ruler

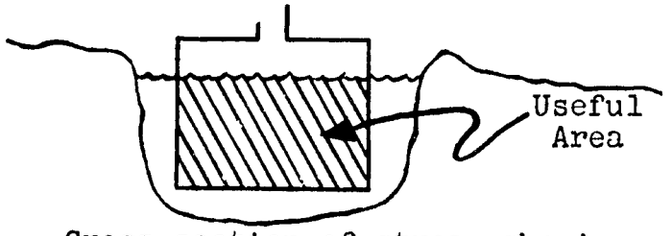

Cross section of stream showing water and paddle.
FIG 1

Details

Many persons seem interested in the idea of using a paddle wheel to get power to lift water. The paddle wheel has no dam or sluiceway -- the paddles dip directly into the flowing stream. The enclosed chart will help you to estimate how much power your stream or river can provide by this method. Remember, the chart does not take into account the possibility of building dams to concentrate the power of your stream.

You must know two things about the stream in order to figure the amount of irrigation you can get:

1. The useful area of a paddle that can dip into your stream. See Figure 1. Remember, at certain times of the year the stream may be lower than it is now. Also, try to build your wheel to withstand floor conditions, too. Let's suppose, for the example to follow, that you have decided the useful area for your stream was two square feet.

2. The velocity of the water. Measure this by dropping a twig or chip of wood into the middle of the stream. Measure how far it goes in ten seconds. Suppose it went 12 feet. This would represent 12 feet/10 seconds = 1.2 feet/second.

The idea of the alignment chart (Figure 2) is to find the number of square feet on the left hand scale, and the velocity of the water on the right hand scale. Join these points with a straight line. This line will cut the center scale, indicating the power available. Figure 2 has the sample calculation plotted on it. As you can see, the answer comes out to be just ½ gallon/minute pumped up to ten feet. Suppose you wished to pump the water up 20 feet; then you could only get ¼ gallon/minute. Use this formula to figure the rate water will be supplied to other heights:

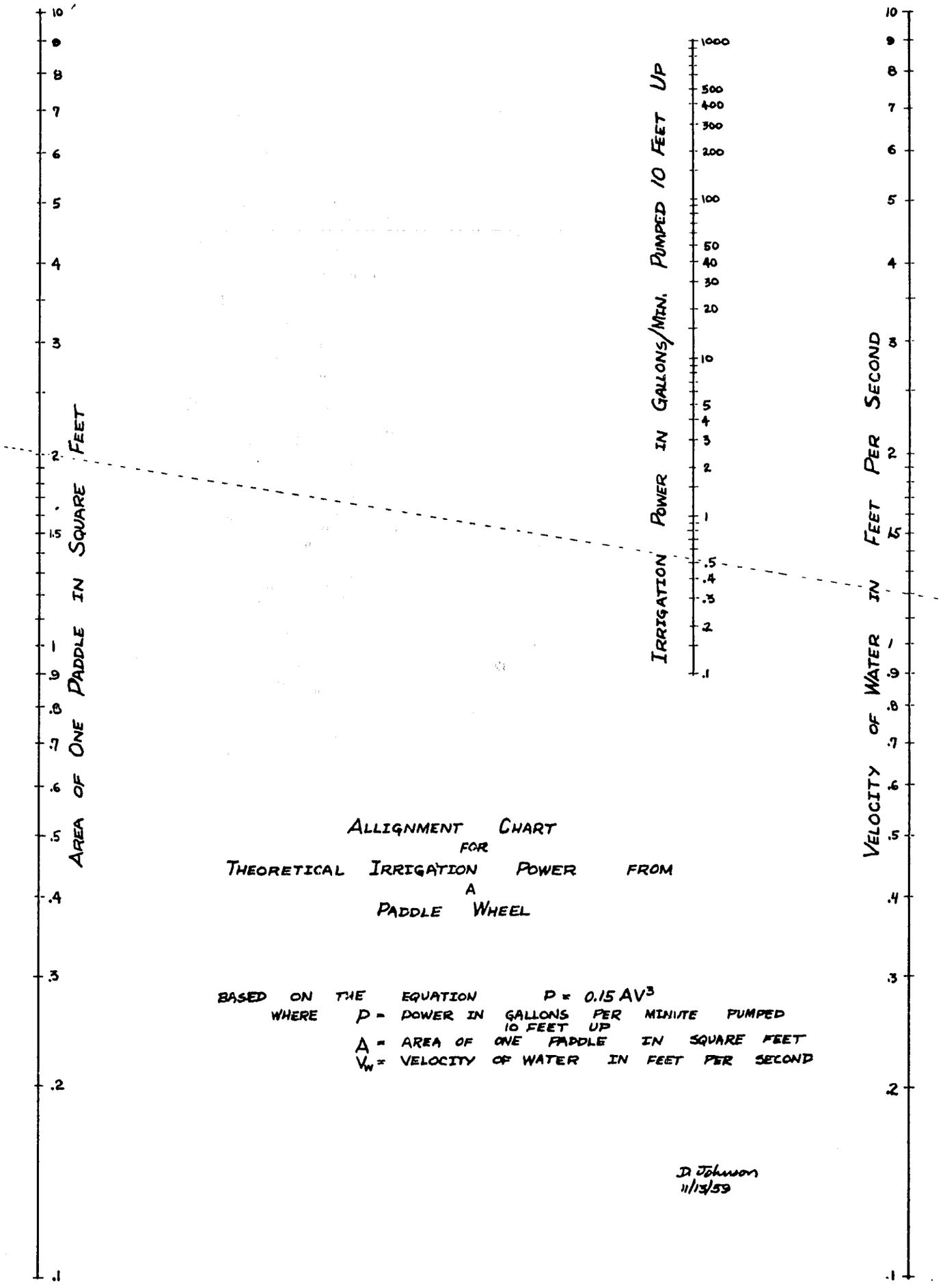

ALLIGNMENT CHART
FOR
THEORETICAL IRRIGATION POWER FROM
A
PADDLE WHEEL

BASED ON THE EQUATION $P = 0.15\,AV^3$

WHERE P = POWER IN GALLONS PER MINUTE PUMPED 10 FEET UP

A = AREA OF ONE PADDLE IN SQUARE FEET

V_w = VELOCITY OF WATER IN FEET PER SECOND

D. Johnson
11/13/59

$$\frac{10 \text{ feet}}{\text{Height in feet you wish to pump water up}} \times \text{Gallons per minute pumped 10 feet up} =$$

$$= \text{Gallons per minute pumped to your height}$$

In general, it is more effective to utilize water power by making a dam and/or a sluiceway. But if you do build a paddle wheel machine, adjust the load so that the paddles move at 1/3 the stream velocity for maximum power.

Evaluation

This chart is based on the theoretical maximum irrigation power. Water wheels and pumps are not 100% efficient; in any practical set up you will get less water than the chart predicts. Not too many irrigation ditches or canals flow fast enough and deep enough to pump an appreciable amount of water without constructing some kind of a dam or sluiceway.

Material from - VITA Office, Schenectady, New York

RECIPROCATING WIRE POWER TRANSMISSION
For Small Water Wheels

Abstract

A reciprocating wire can be used to transmit power from a water wheel to the farmyard up to ½ mile away, where it is usually used to pump well water.

Tools and Materials

Wire - galvanized smooth fence wire
Water wheel with eccentric crank to give a motion slightly less than largest stroke of farmyard pump
Galvanized pipe for triangle frames...2 cm (3/4 inch) by 10 meters long (32.8 feet)
Welding or brazing equipment to make frames
Concrete for counterweight
Poles...two poles of 15 to 25 cm (6 inch to 10 inches) diameter

Details

The Amish people of Pennsylvania use this method to transmit mechanical power from small water wheels to the barnyard, where the reciprocating motion is used to pump well water for home and farm use. The water wheel is typically a small undershot wheel one or two feet in diameter. The wheel shaft is fitted with a crank, which is attached to a triangular frame which pivots on a pole. A wire is used to connect this frame to another identical unit located over the well. Counterweights keep the wire tight. As the water wheel turns, the crank tips the triangular frame back and forth. This action pulls the wire back and forth. One typical complete back and forth cycle, takes 3 to 5 seconds. Sometimes power for several transmission wires comes from one larger water wheel.

The wire is mounted up on poles to keep it overhead and out of the way. If the distance from stream to courtyard is far, extra poles will be needed to help support the wire. Amish folks use a loop of wire covered with a small piece of garden hose attached to the top of the pole. The reciprocating wire slides back and forth through this loop. If this is not possible, try making the pole 1-2 meters higher than the power wire. Drive a heavy nail near the pole top and attach a chain or wire from it to the power wire as shown in Figure 2.

Turns can be made in order to follow hedgerows by mounting a small triangular frame horizontally at the top of a pole as shown in Figure 3.

Evaluation

These devices have been in use for many years by the Amish, and provide long, trouble-free service when properly installed.

Material from - New Holland VITA Chapter

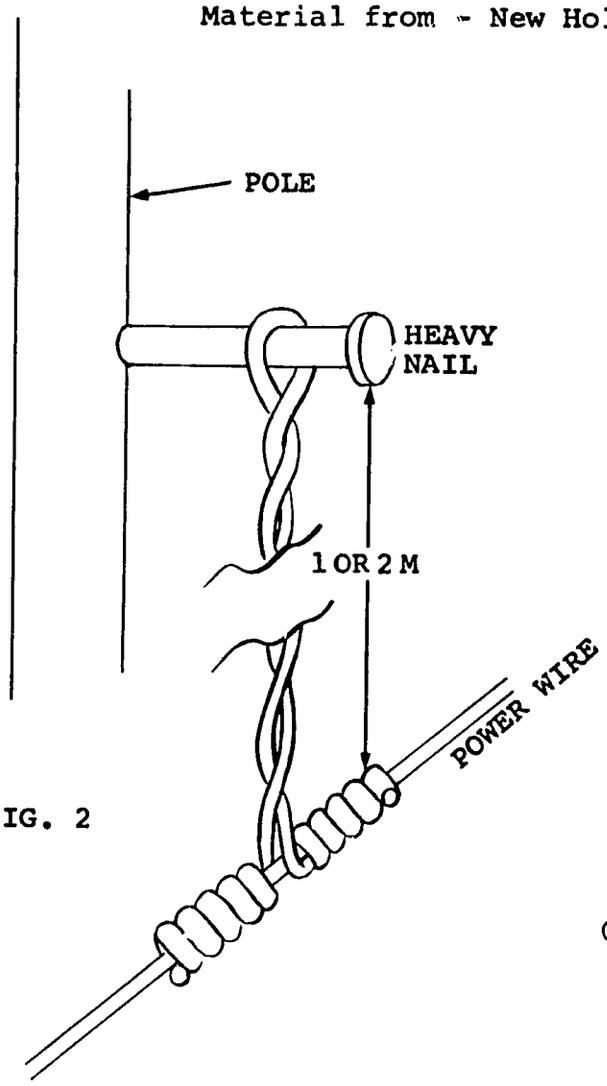

FIG. 2

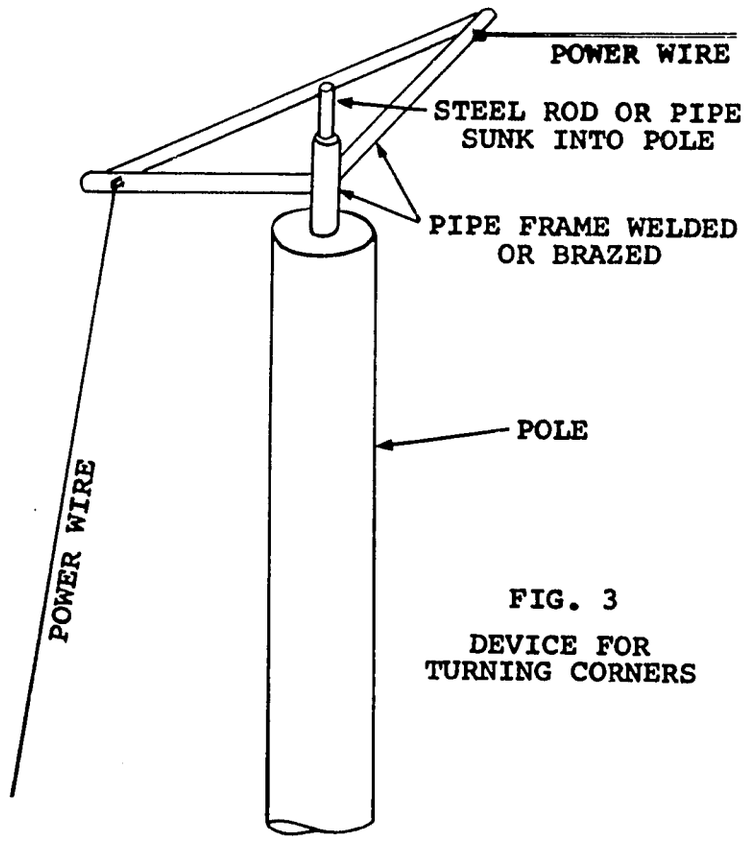

FIG. 3

DEVICE FOR TURNING CORNERS

AMISH WATER WHEEL POWER TRANSMISSION

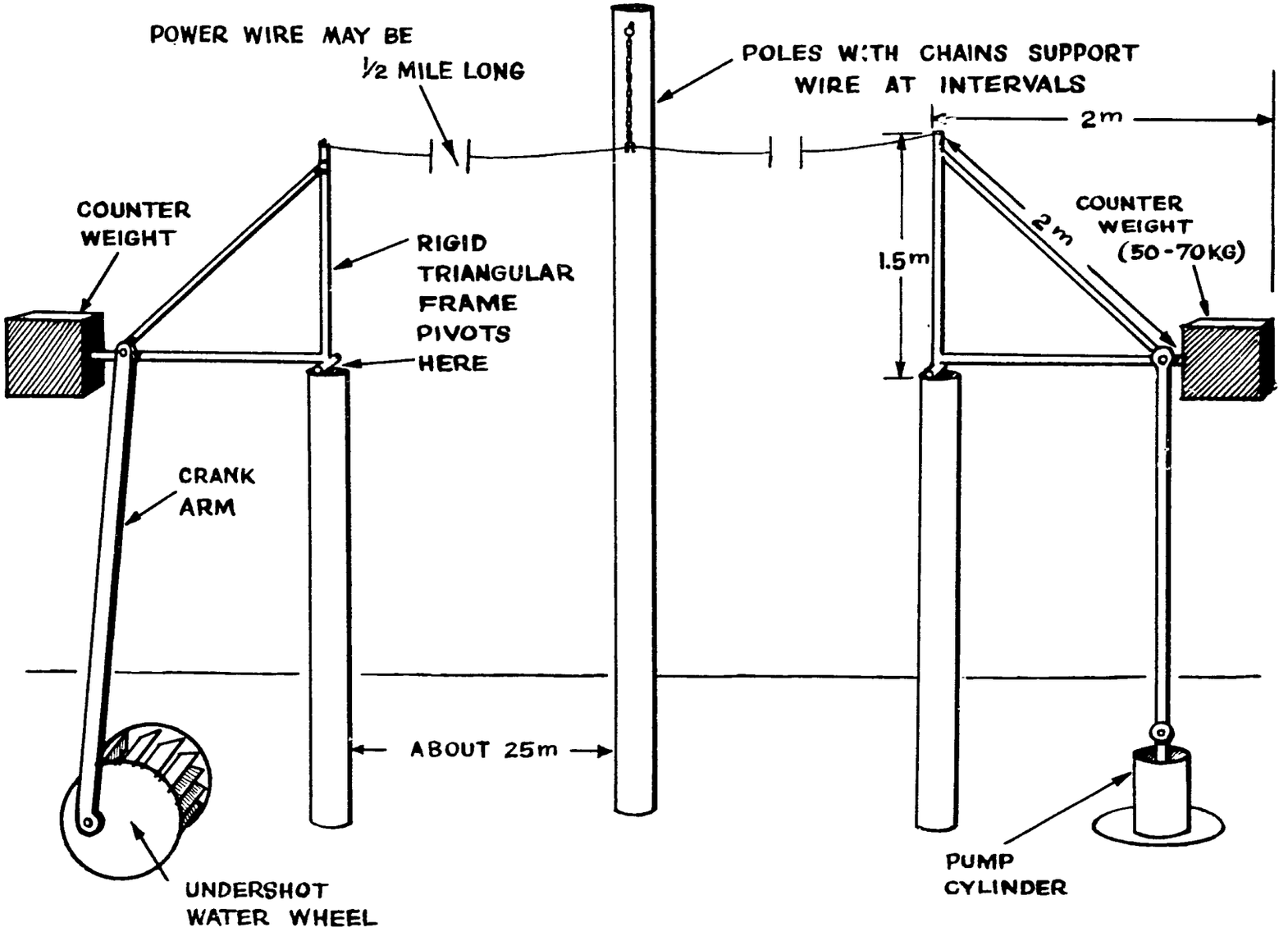

MAP MAKING USING A PLANE TABLE

ABSTRACT

A description is given for the construction of serviceable maps using a plane table. Such maps are valuable for irrigation, drainage and village layout plans.

TOOLS AND MATERIALS

Plane table
Paper
Pencil
Ruler
Pins
Tape measure (optional)
Spirit level (optional)

DETAILS

The first step is for the map maker to measure his pace. A one hundred foot interval should be laid out on level ground. If only a foot ruler is available, this may be used to mark out three or four feet on a stick, and this stick in turn used to measure the 100 feet. Being careful to work normally, the map maker than determines the number of paces over the 100 foot interval. By division, it is then possible to find a number of feet in an average pace.

The next step is to decide on a scale for the map. This is determined by judging the longest distance to be mapped and the size of the map desired. It should be noted that the map does not have to be made on a single sheet of paper but can be spliced together when completed. As an example, if one wanted a map 2 1/2 feet long to portray an area whose major distance is 1/2 mile, 2640 feet, then a scale of 100 feet to the inch would be convenient.

Paper should be placed on the plane table and the plane table oriented on or near some principal feature of the map, that is, a path, road, creek, street, etc. A pin should then be placed vertically in the spot on the finished map where this location is desired. The plane table should be made level - by use of a spirit level, if available. The table should be rotated to a proper orientation, that is, so that the direction will appear on the finished map in the desired way. Now sight along the first pin to another principal feature which is visible from the table location (a bend in the road, a hill or any feature that will tie the map together), moving the second pin into the line of sight. A ruler may be used for this purpose if it has a sighting edge or even a couple of pins stuck into it. Now draw a line in the direction defined by the two pins. Measure the distance to the feature observed either by pacing or with a tape. Scale this distance along the line drawn, starting at the initial pin. Repeat this process for other principal features which may be seen from this location. When this has been done, move the table to one of the points just plotted, selecting one which will

enable you to move over the territory in a convenient fashion. For example, follow a lane or creek or some feature which ties things together. Set up the plane table over this point and reorient the table. Do this by putting pins into the map at the present and previous locations. Next rotate the table so that the pins line up with the previous location. This procedure in fact locates the line joining the two locations on the map in the same direction as the line exists in nature. Again from this new location map in the desired features which can be conveniently sighted.

In this way the entire region to be mapped may be covered in a systematic way. If gaps appear or if more detail is needed, you may go back and set up over some mapped feature, reorient the map by sighting on a second feature, and proceed to map in the detail.

An alternate procedure may be used in mapping features which are not going to be used as plane table locations in the mapping process. This involves drawing a line in the direction of each feature from two plane table locations. The intersection of these two lines corresponding to a single feature locates the feature on the map. As a result this avoids the necessity for measuring distances. Note, however, that is it impossible to avoid measuring the distances between plane table locations.

If a spirit level is available, it is possible to level the plane table accurately, and using a ruler or other sighting device, relative elevations may be plotted on the map. A stick about six or eight feet long should be marked off in inches, and the person holding the stick vertically can, by moving his finger, identify to the person sighting, the distance up from the ground through which the line of sight passes.

EVALUATION

Until the advent of aerial photography, most topographical maps were made by the use of plane tables.

Material From - Dr. Robert G. Luce
VITA Participant

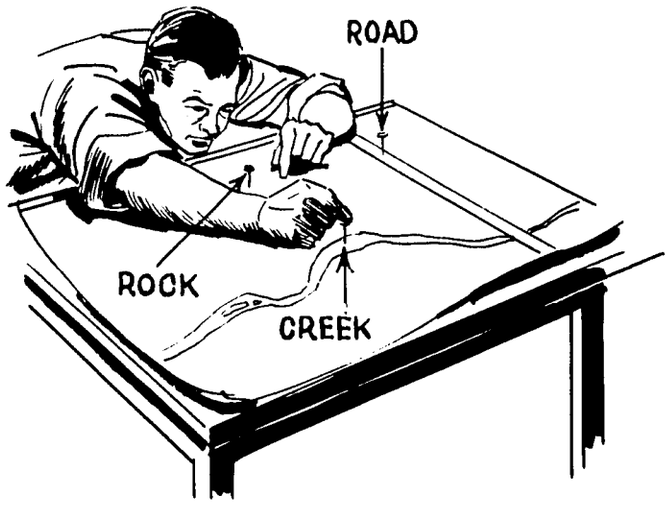
ROAD
ROCK
CREEK

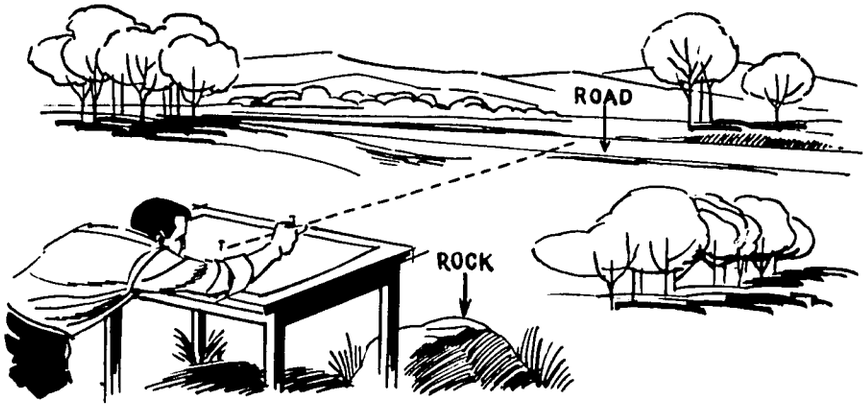
ROAD
ROCK

HEALTH AND SANITATION

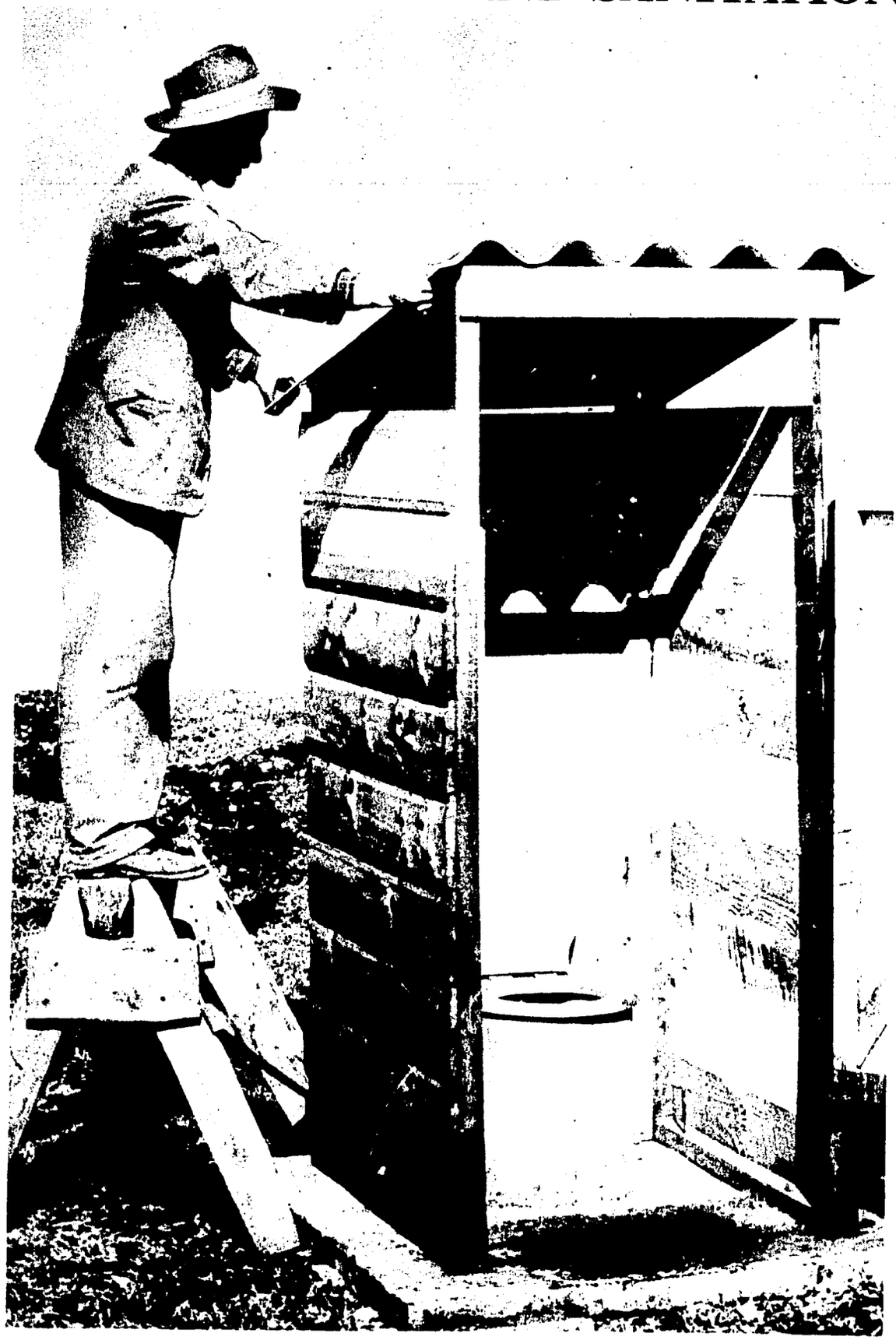

CHILE

INTRODUCTION TO SANITARY LATRINES

Abstract

This paper summarizes the purpose and need for latrines and briefly compares the types.

Details

Many forms of human sickness are present in human nightsoil. These are spread to others by water, hands, insects or soil. The sanitary latrine breaks this cycle. Some sicknesses that can be controlled by widespread use of sanitary latrines are dysentary, cholera, typhoid and worms. The human suffering and economic loss caused by these is staggering. It has been said that a man with intestinal parasites must work in a sick condition to raise food, half of which is consumed by the very worms that make him sick.

However, a latrine program must reach most or all of the people. This means a carefully planned, continuing long-range program with participation by government agencies, foreign workers, community leaders and most of all by the individual families. Proper latrine designs which fit the cultural pattern are economically possible and can satisfy the sanitary needs of a successful latrine program. This shows some selected plans and designs for sanitary latrines. Before starting a latrine program for your village, it is recommended that you contact government and agency health organizations, observe their programs and obtain their cooperation.

The recommended kinds of privies are:

- pit privies...a simple hole in the ground, covered with a properly built floor, hole and shelter. It has two forms, the dry pit which does not penetrate the water table and the wet pit, which does.

- water privies, where a watertight tank receives the nightsoil through a drop pipe or chute. An overflow pipe takes the digested material to an underground seepage pit or drainage area.

Finally a water-seal slab may be used to cover either of these types of privies to provide a completely odorless privy.

Other types of simple latrines are not recommended for general use, usually because they fail to provide enough protection from a sanitary viewpoint.

For a good privy...

- the surface soil should not be contaminated.
- there should be no contamination of ground water that may enter springs or wells.
- there should be no contamination of surface water
- nightsoil should not be accessible to flies or animals.
- there should be no handling of fresh nightsoil or, if necessary, it should be handled as little as possible.
- there should be freedom from odors and unsightly conditions.
- the method used should be simple and inexpensive in construction and operation.

Evaluation

Successful privy programs are of major importance to public health. However, it is necessary to have improved water supply, sanitary food handling, sufficient medical services and adequate diet to stop filthborn disease.

Material from...WHO Monograph #39 "Excretea Disposal for Rural Areas and Small Communities," by E. G. Wagner and J. N. Lanoix

*Night Soil is a term used for human excrement in many areas of the world.

PRIVY LOCATION

Abstract

Outhouses or privies should be close to the home but lower than and far enough away from water sources to stop pollution of water.

Details

If the bottom of the privy pit is in dry soil, at least three meters (10 feet) above the highest ground water table, there is very little danger that it will contaminate water supplies. This is because the pollution will move downward no more than three meters with only one meter (3.3 feet) of side movement.

If the privy pit enters the water table, or comes close to it when the water is at its highest level, pollution will spread to the water and endanger health. Figure 1 shows the movement of pollution through the soil, which is particularly important to know when choosing a site for the privy or well. Put the privy downhill from the water source, or as far to one side as possible. On flat or gently sloping land, the well is the same as directly downhill from the latrine. This is because removing water from the well will cause water from the surrounding soil to flow toward the well, thus causing pollution from the privy to move toward the well. If the land is flat or the well is downhill from the privy, try not to put the privy closer to the well than 15 meters (50 feet). In sandy soil, a distance of 7.5 meters, or 25 feet, is sometimes enough as the sand helps stop bacterial pollution.

These rules do not apply in regions containing fissured rocks or limestone formation. Expert advice is necessary in these cases, since pollution may be carried great distances through solution channels to the drinking water supply.

It is important to keep the latrine close to the house so that it will be used, but not too close. Putting the privy downhill encourages uses and people are more apt to keep it clean if the privy is close to the house. Remember that all of these privies have to be moved when filled. This should be made easy or there will be those who will let them become overfull. This always results in very unsanitary conditions and extra work to put the system in proper working order.

Evaluation

Based on knowledge gathered over the years by sanitary engineers and scientists covering most normal situations. It is always best

to have a trained sanitary engineer review your installation or program.

Material from - Principal reference
WHO Monograph #39
"Excreta Disposal for Rural Areas and Small Communities"
by E. G. Wagner and J. N. Lanoix.

BACTERIAL AND CHEMICAL SOIL POLLUTION PATTERNS AND MAXIMUM MIGRATIONS*

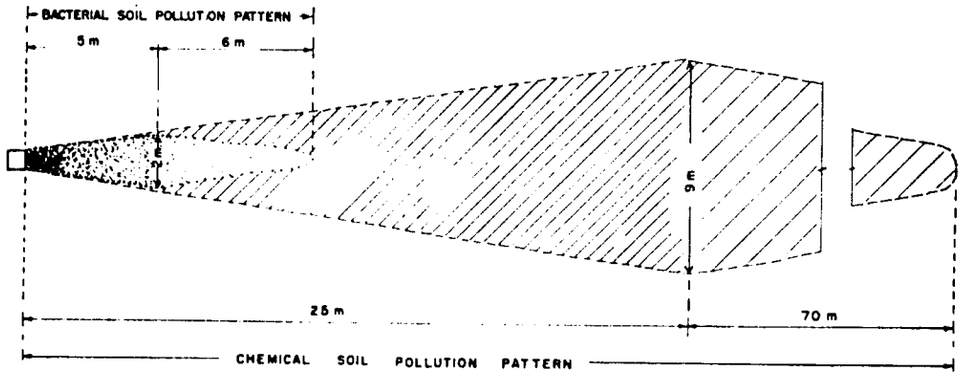

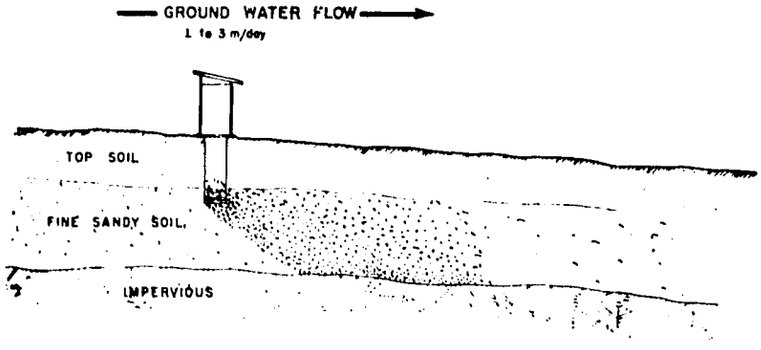

The source of contamination in these studies was human excreta placed in a hole which penetrated the ground-water table. Samples positive for coliform organisms were picked up quite soon between 4 m and 6 m (13 ft and 19 ft) from the source of contamination. The area of contamination widened out to a width of approximately 2 m (7 ft) at a point about 5 m (16 ft) from the privy and tapered off at about 11 m (36 ft). Contamination did not move "upstream" or against the direction of flow of the ground water. After a few months the soil around the privy became clogged, and positive samples could be picked up at only 2 m to 3 m (7 ft to 10 ft) from the pit. In other words, the area of soil contamination had shrunk.

The chemical pollution pattern is similar in shape to that of bacterial pollution but extends to much greater distances.

From the point of view of sanitation, the interest is in the maximum migrations and the fact that the direction of migration is always that of the flow of ground water. In locating wells, it must be remembered that the water within the circle of influence of the well flows towards the well. No part of the area of chemical or bacterial contamination may be within reach of the circle of influence of the well.

MOVEMENT OF POLLUTION IN UNDERGROUND WATER

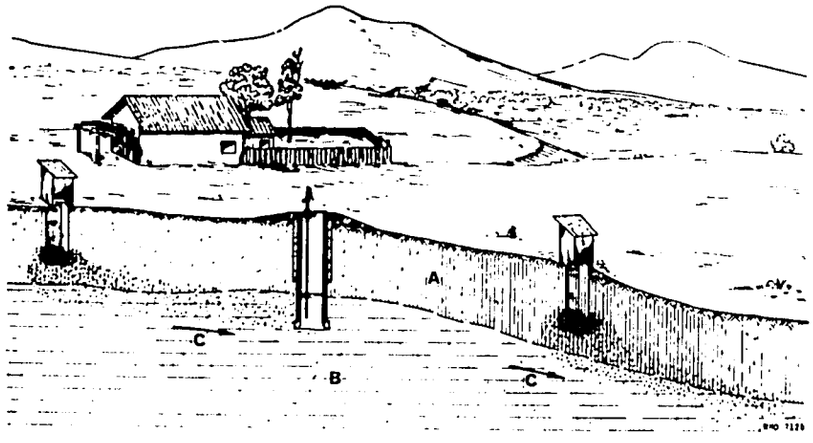

A = Top soil B = Water-bearing formation C = Direction of ground-water flow

PRIVY SHELTERS

Abstract

Drawing of several designs are provided along with a list of important points to know when designing a shelter.

Tools and Materials

A sheet of corrugated sheet metal roofing, 1.2 by 1.2 meters (four by four feet), or larger
Wooden posts, 5 cm by 5 cm (2 by 2 inches), 20 meters long (66 feet)
Boards, 20 cm wide (8 inches), 2 cm thick (3/4 inch), 40 meters long (132 feet)
Nails, handtools, paint (2 quarts)

Details

The shelter should be built to fit the abilities and desires of the local people, since it is less important than the pit and slab from a sanitary viewpoint. A properly built shelter requires:

- standardized design for economy and building
- a pit will last 8 to 15 years and the shelter should last as long
- the shelter should fit the floor slab but not be too large so people will use the hole even when the floor may be soiled by earlier users. The roof should be 2 meters (6.5 feet) or more at the entrance
- Openings at the top of the shelter's walls, for airing the interior, should be 10 to 15 cm (4.6 inches) wide
- Natural light should be available with enough shade over an uncovered seat or hole that flies will not be attracted
- Paint or whitewash the shelter, cut back nearby vegetation, have a large overhang on the roof so that the inside remains dry and avoid mud. Do not use the shelter for animals or poultry. People will be neat and use the shelter, if it appears neat.

Evaluation

The structures shown have been found satisfactory in many parts of the world.

Material from ...WHO Monograph #39
Excreta Disposal for Rural Areas and Small Communities, by E. G. Wagner and J.N. Lanoix (1958)

COMPLETED PRIVY, SHOWING PALM THATCH WALL AND ROOF COVERING

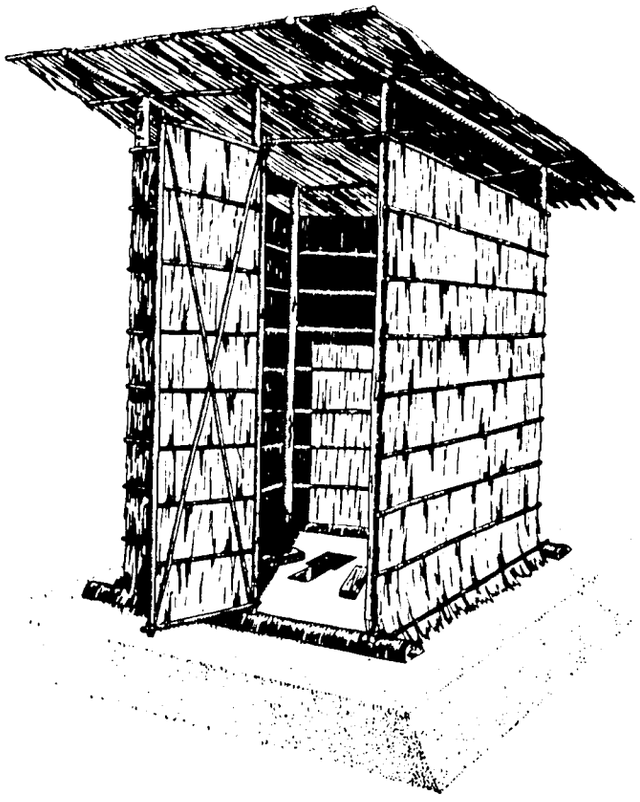

WATTLE HOUSE WITH PALM THATCH ROOF

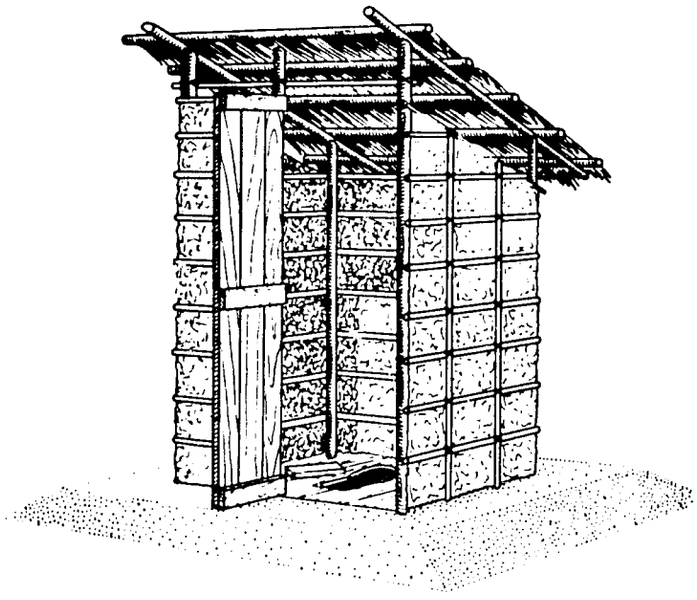

HOUSE OF CUT LUMBER WITH CORRUGATED METAL OR ASBESTOS CEMENT ROOF

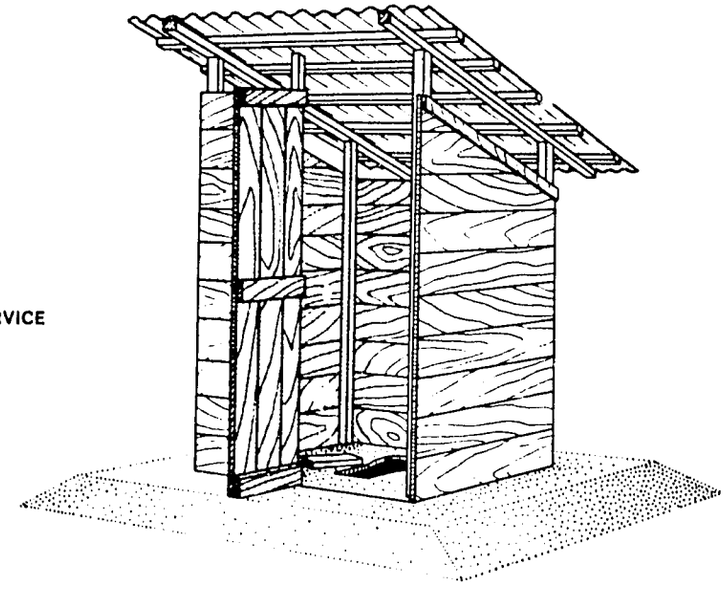

TYPE OF SUPERSTRUCTURE RECOMMENDED BY US PUBLIC HEALTH SERVICE

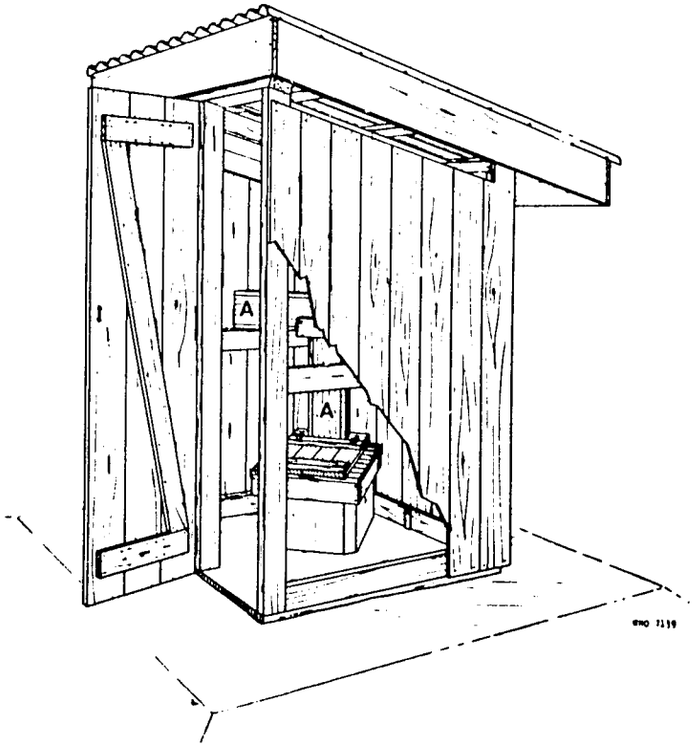

HOUSE OF BRICK WITH TILE ROOF

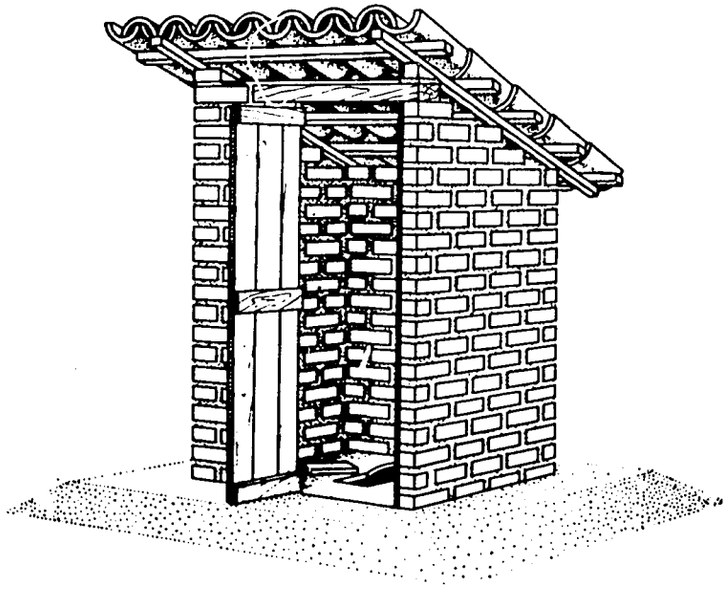

Adapted, by permission, from United States Public Health Service (1933) *The sanitary privy*, Washington, D.C. (Revised type No. IV of *Publ. Hlth Rep. (Wash.)*, Suppl. 108).

A = Vent pipe with lateral outlet

PIT PRIVY

Abstract

This is the simplest recommended latrine or privy, having a hand dug hole, properly mounted slab and a shelter.

Tools and Materials

Materials for building the shelter
Handtools for digging the pit, concrete construction and building the shelter

Details

The pit is round or square, about 1 meter (3.3 feet) in diameter or for each side and usually 1 to 3 meters (3.3 to 10 feet) deep. The pit may have to be lined, to prevent caving, with brick, wood, bamboo, etc., even in hard soil. It is good to line the top one meter (3.3 feet) of the hole so as to make a solid base for the slab and shelter. Fifty centimeters (19.5 inches)of the top of the hole can be lined with mortar for this purpose.

The following table will help you to estimate the depth of hole to make. The top part of the table is for a wet-pit privy, where the hole penetrates the water table and the contents are usually quite wet.

PIT PRIVY CAPACITY FOR A FAMILY OF FIVE

Pit Type	Years of service	Estimated volume and depth* for hole with 1 m^2 area	
		Personal Cleansing Material	
		water	solid
		volume m^3 and depth m	volume m^3 and depth m
WET	4	0.74	1.13
	8	1.47	2.26
	15	2.74	4.23
DRY	4	1.13	1.7
	8	2.26	3.38
	15	4.23	---

One-half meter has been added to the depth since the pit is considered full when material is that distant from the slab.

The base serves as a solid, waterproof support for the floor. It also helps to prevent hookworm larvae from entering. Properly made of a hard, strong material, it helps stop the entrance of burrowing rodents and of surface water into the pit. The pit lining in most cases will serve as a base although it may need to be strengthed at the ground surface.

A concrete water-seal slab is best and is economical but means added labor and construction. A concrete open-hole slab is the next best, while a wooden floor is adequate. A built-up floor of wood and compacted soil is sometimes used but is difficult to keep clean as it gets soiled and is likely to spread hookworm.

FIG. 10. VARIOUS PARTS OF A SANITARY PRIVY

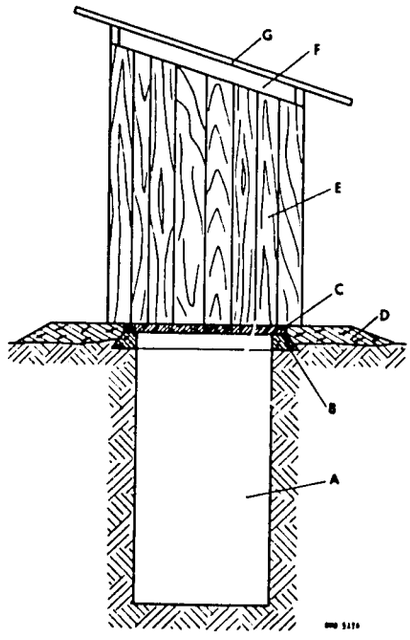

A = Pit
B = Base
C = Floor
D = Mound
E = House, including door
F = Ventilation
G = Roof

The concrete should not be weaker than 1 part cement to 6 parts of aggregate with a minimum of water. It should be reinforced with strips of bamboo about 2.5 cm (1 inch) wide and with the weaker fibres stripped away. Soak the bamboo in water overnight before use.

The slabs are cast upside down in one operation. The footrests are shaped by removing part of the wooden form so as to make two separate indentations in the wood. Sheet metal is placed around the form so that the metal extends above the wood to the thickness of the slab. Side walls of the hole and footrests are made with a slight slope so as to come out easily. The form for the open hole is removed when the concrete first sets. Slabs are removed from the forms in about 40 hours and should be stored under water for 10 days or more.

Round slabs can be rolled some distance when carrying is difficult.

The mound protects the pit and base from surface run-off which otherwise might enter and destroy the pit. It should be built up to the level of the floor and be very well tamped. It should extend 50 cm (20 inches) beyond the base on all sides. In unusual cases, such as flood plains and tidal areas, the mound may be built much higher than the ground as a protection against floor and high tides. It will normally be built with the

earth removed in digging the pit and soil from the surrounding area. A stone facing will help stop it from being washed away by heavy rains. In front of the entrance door, a masonry or brick step can be built to help keep the floor clean.

Evaluation

This is the most widespread and satisfactory type of latrine, when properly designed , built and located.

Material from...WHO Monograph #39
Excreta Disposal for Rural
Areas and Small Communities
by E. G. Wagner and J. N.
Lanoix

TYPICAL ROUND AND SQUARE BASES
(BUILT WITH SOIL-CEMENT OR CLAY)

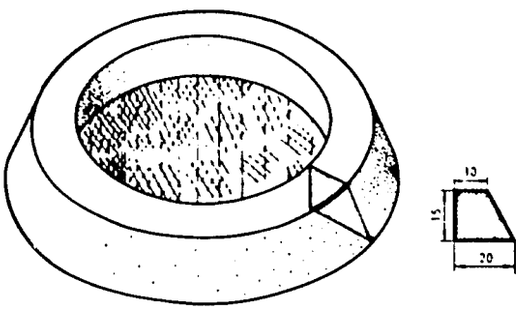

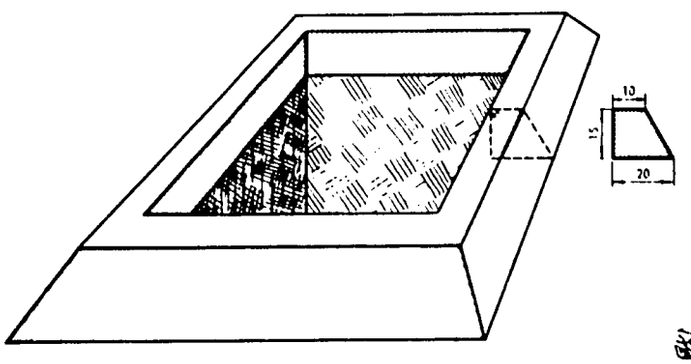

A HEWN-LOG PRIVY BASE

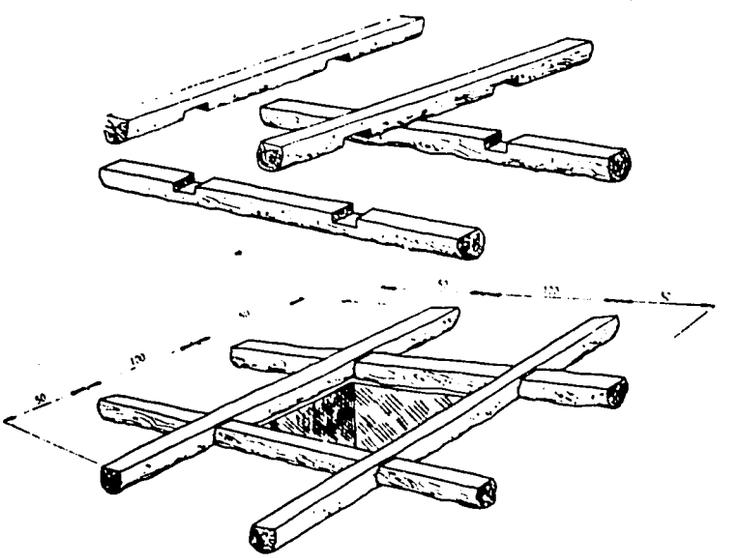

SQUARE CONCRETE SLAB FOR PIT AND BORED-HOLE LATRINE

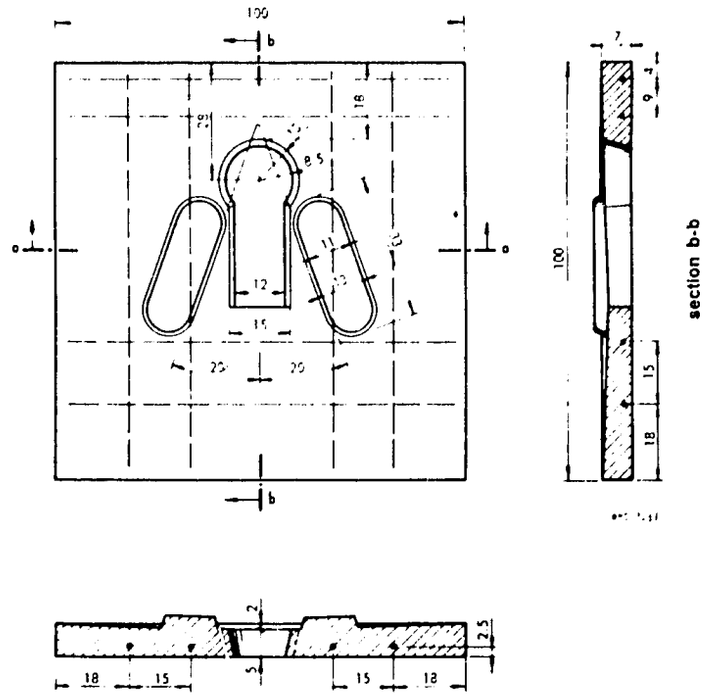

section a-a

Measurements shown are in centimetres.

CIRCULAR SLAB FOR BORED-HOLE LATRINE*

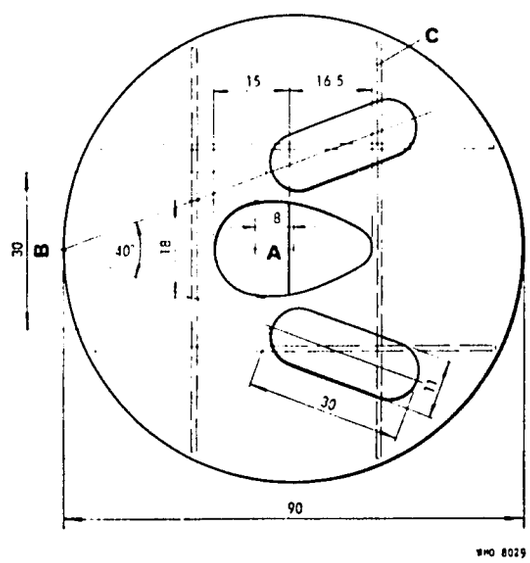

Measurements shown are in centimetres.

* Built in East Pakistan. See also Fig. 52.

∴ = Centre open hole 2.5 cm (1 in.) back of centre if slab is 80 cm (31 in.) in diameter; centre open hole 8.0 cm (3 in.) back of centre if slab is 90 cm (35 in.) in diameter

B = Between back centre foot-rests

C = Reinforcement

Notes on construction of slab

Concrete for slabs should be not weaker than 1 part cement to 6 parts aggregate, with a minimum of water.

Slab is reinforced with strips of bamboo of timber quality. Reinforcing strips are about 2.5 cm (1 in.) wide, have had inner, weaker fibres stripped away, and have been soaked in water overnight before use.

Slabs are cast upside down in one operation. Base of form is of wood with indentations for foot-rests. Base of form is encircled by sheet metal strip which makes outer wall of form. Side walls of hole form and foot-rests are made with slight slope so as to come out easily. Form for open hole is removed when concrete has taken initial set. Slabs are removed from form in about 40 hours and stored under water, preferably for 10 days or more. Since these slabs are round, they may be rolled some distance when conveyance is difficult.

WATER PRIVY

Abstract

This system uses a watertight tank for initial decomposition. The tank is connected by sewer pipe to an underground drain area or seepage pit.

Details

The digesting tank is usually made of watertight concrete. A drop-pipe is attached to the squatting plate or seat and hangs down 10 cm (4 inches) below the liquid surface in the digesting tank. This forms a water seal that prevents bad odors from entering the privy shelter. Because of the digestion process, a sludge forms in the tank and must be bailed out before it is half full. A manhole, often outside the shelter, is made for this job. The amount of sludge is only one-fourth of the total nightsoil deposited in the pit because some of the solid matter breaks down into pieces, liquid and gas. The pieces of nightsoil and liquid run out the overflow pipe to the drain field and the gas escapes from an outside vent pipe. The pieces of nightsoil are very small as they leave the pipe.

Notice in figure 1 that the tank floor slopes toward the manhole for easier cleaning. Both the vent and drain are easily reached. The drain has a T section which helps to stop the hard surface scum from entering and plugging the drain and also allows for easy cleaning.

The 10 cm diameter drop pipe, with the end 10 cm below the surface, prevents water from splashing and improves flushing. Nightsoil may stick in the pipe from time to time and must be flushed or poked down to stop odors and flies from breeding. The pipe may be up to 20 cm (8 inches) in diameter and reach 20 cm below the surface of the water in the pit, which will prevent sticking, but this makes more odors and splashing and the pipe may crust over.

The tank must be watertight. If the tank leaks, the liquid level will fall below the drop pipe, odors will form, flies and mosquitos breed, and pollustion of the soil and ground water will occur. Tanks with bricks or stone and mortar must be faced with a coat of rich cement plaster to insure water tightness.

Use the chart in PIT PRIVIES, under wet-pit, to estimate the time before bailing of the pit will be necessary. Bury the sludge in shallow 40 cm (16 inch) trenches.

The tank can be made of plain concrete sewer pipes 90 or 120 cm (36 to 47 inches) in diameter and sealed at the bottom with concrete. Family-sized units should not be less than 1 cubic meter (35 cubic feet), which will usually allow 6 years or more between cleanings. Thus the family water privy need not be too deep, which is an advantage in rocky ground where the water table is high.

Disposal of effluent from a family unit is usually done in seepage pits or by below ground irrigation. The amount of effluent is equal to the amount of nightsoil and water put into the digesting pit. This averages 4.5 liters a person each day. The drainage system should be designed to handle 9 liters a person each day. When a water tap is inside the privy, the effluent disposal system must be much larger. Too much water causes poor digestion of sludge. The area of the bottom of below ground irrigation ditches or seepage pits needed for a family of five will be from 1.4 square meters (10.7 square feet) in very light soil to 5 square meters (53 square feet) in soils that are hard to penetrate. These methods are not practical in regions where the water table rises to within 1 meter from the ground surface, or in clay soils or swampy land. Here some type of sand filter may help, but this requires help and approval from local health experts and continued maintenance.

Evaluation

This is a sanitary and permanent installation when properly built and given daily use and proper maintenance. It can be placed near a building. The first cost of a water privy is high, but it is not expensive in the long run since it will be used for many years. It needs some water and cannot be used in cold climates. The water privy may not be successful in rural areas where there are no organized sanitation and health education services.

Material from...WHO Monograph #39
Excreta Disposal for Rural
Areas and Small Communities,
by E. G. Wagner and J. N.
Lanoix

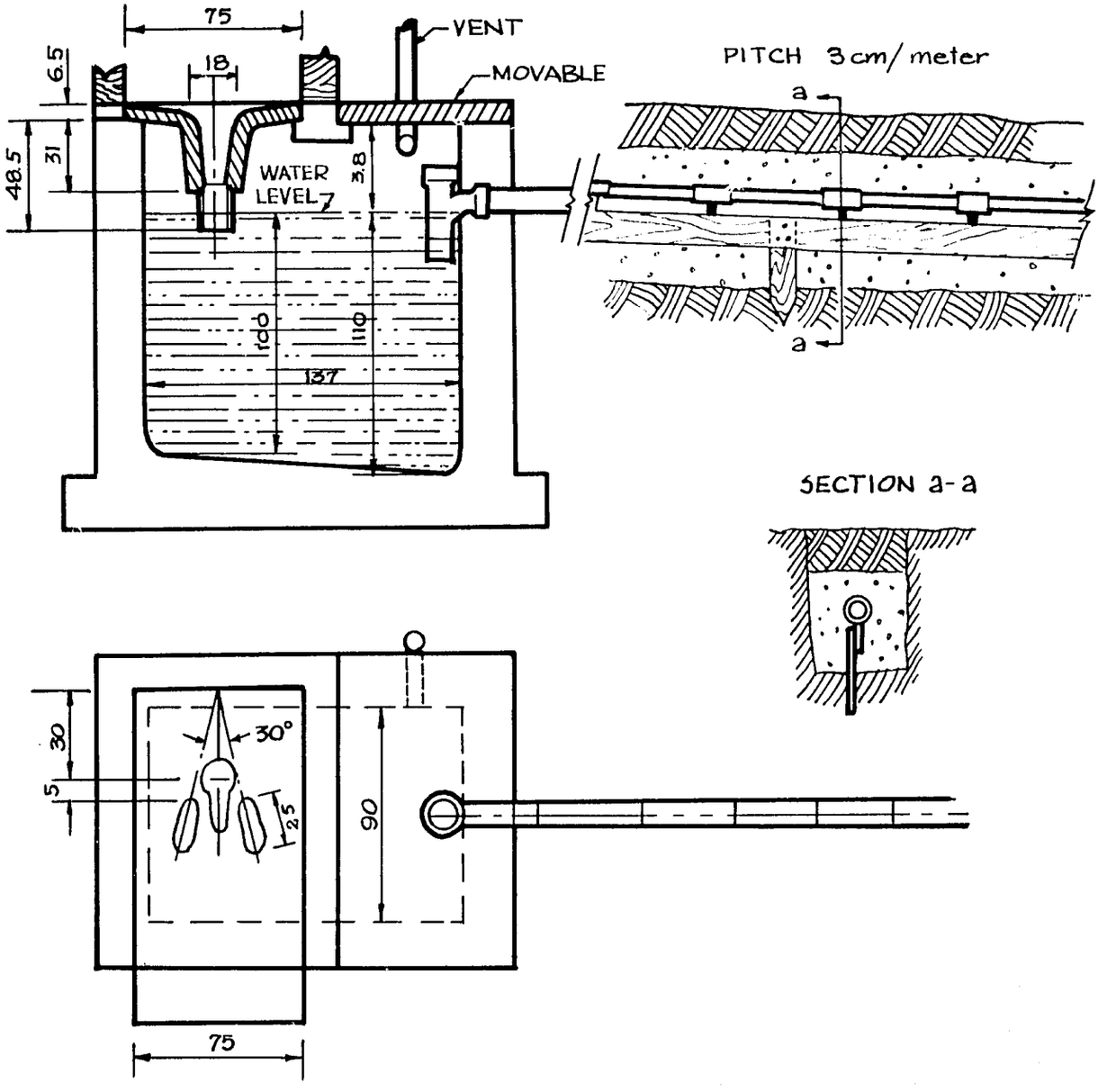

all dimensions in cm.

FIG. I

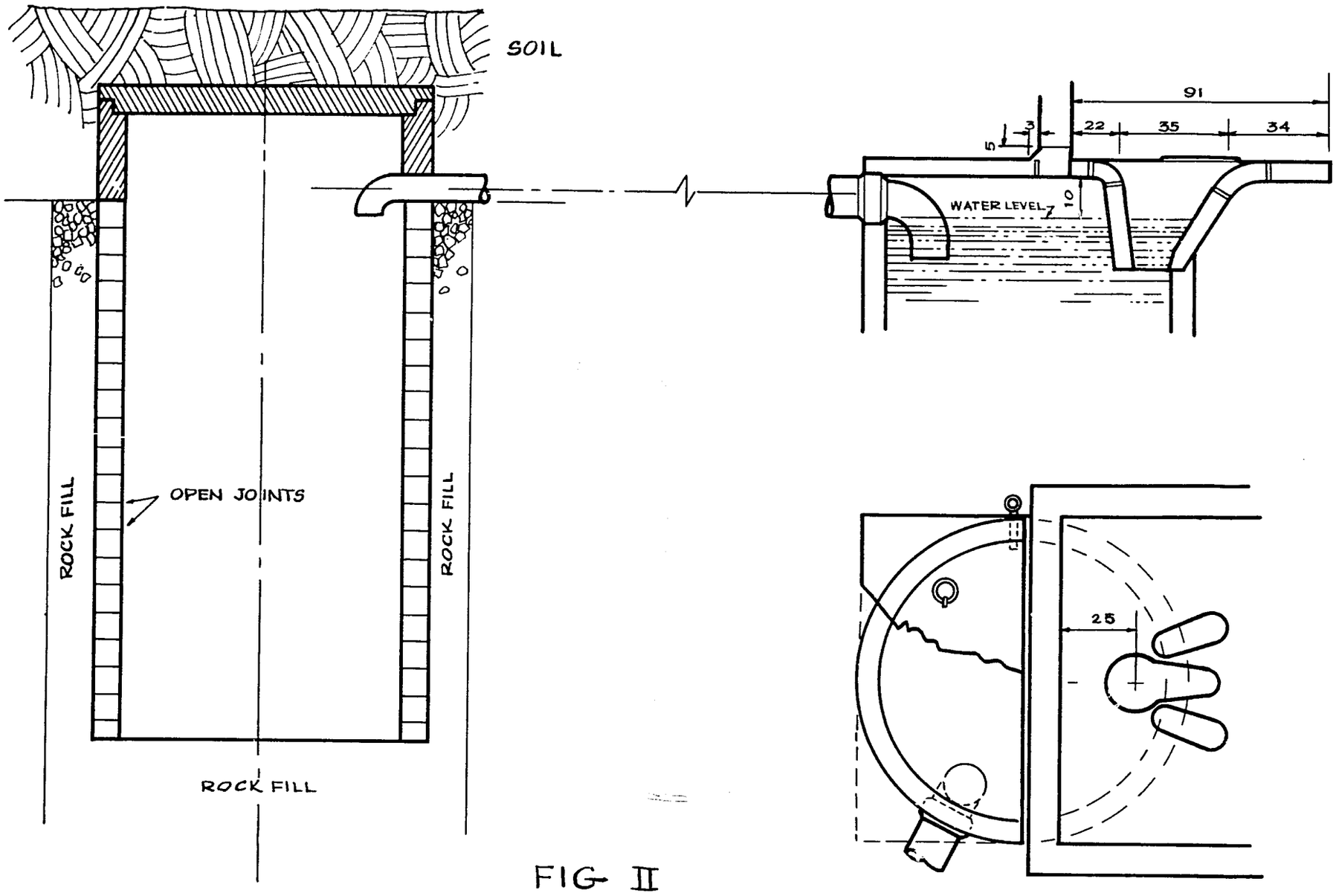

FIG- II

Not in Scale
Dimensions in cm.

PHILIPPINE WATER SEAL LATRINE

Abstract

This easily-made mold is used to make water seal bowls for latrines. It has been made and used in successful sanitary latrine programs in the Philippines.

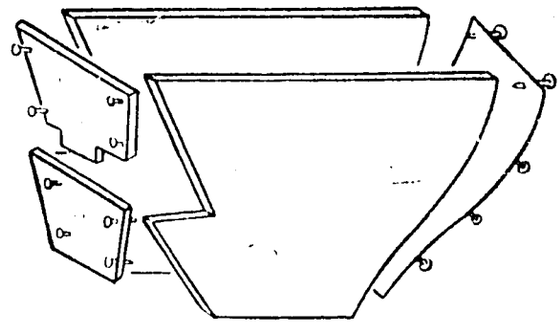

FIG 1

Tools and Materials

Wood, 3/4 inch thick by 12¼ inches by five feet, as needed.
Galvanized iron, 1/32 inch by 12½ inches by 16 inches. Metal from a five inch kerosene can is all right.
18 large nails.
Clean, sharp sand; cement; spade and bucket to mix concrete.
Spoon, to dig out interior.
Galvanized wire, 3/16 inch, 1 foot long to make interior mold handle.
Bamboo pole or iron rod, 1 foot long, to position interior mold.

Details

Making the bowl is easy, if materials are cut as shown in the drawings. Cut according to Figure 2, then nail the metal sheet around the curved back of the mold. Attach the two front pieces with the large nails through the loose-fitting holes for easy removal. The extension on piece no. 1 is important so that the bowl will seal well below the water level. This type of mold, being easy to make and inexpensive, has the advantage over cement molds since manufacture is limited by drying time. The more molds used, the more bowls that can be made during the work session.

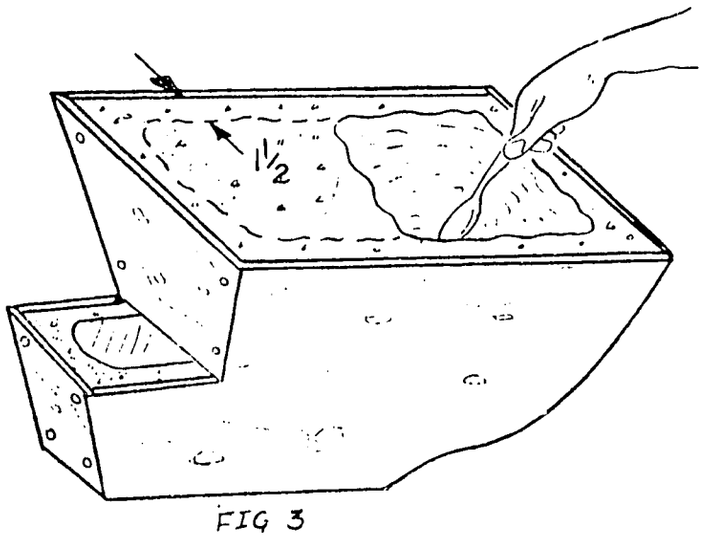

FIG 3

Since the mold has no bottom, find a flat place to work where the mold can be propped against a wall. Fill the mold with a mixture of one part cement to two parts fine sifted sand. Use only enough water to make the mixture workable. Pack it in so that there are no airpockets. Allow to set for 15 to 20 minutes until the mixture is stiff. Next, with a ruler, measure a 1½ inch wall around the top and outlet and dig out the inside with a tablespoon.

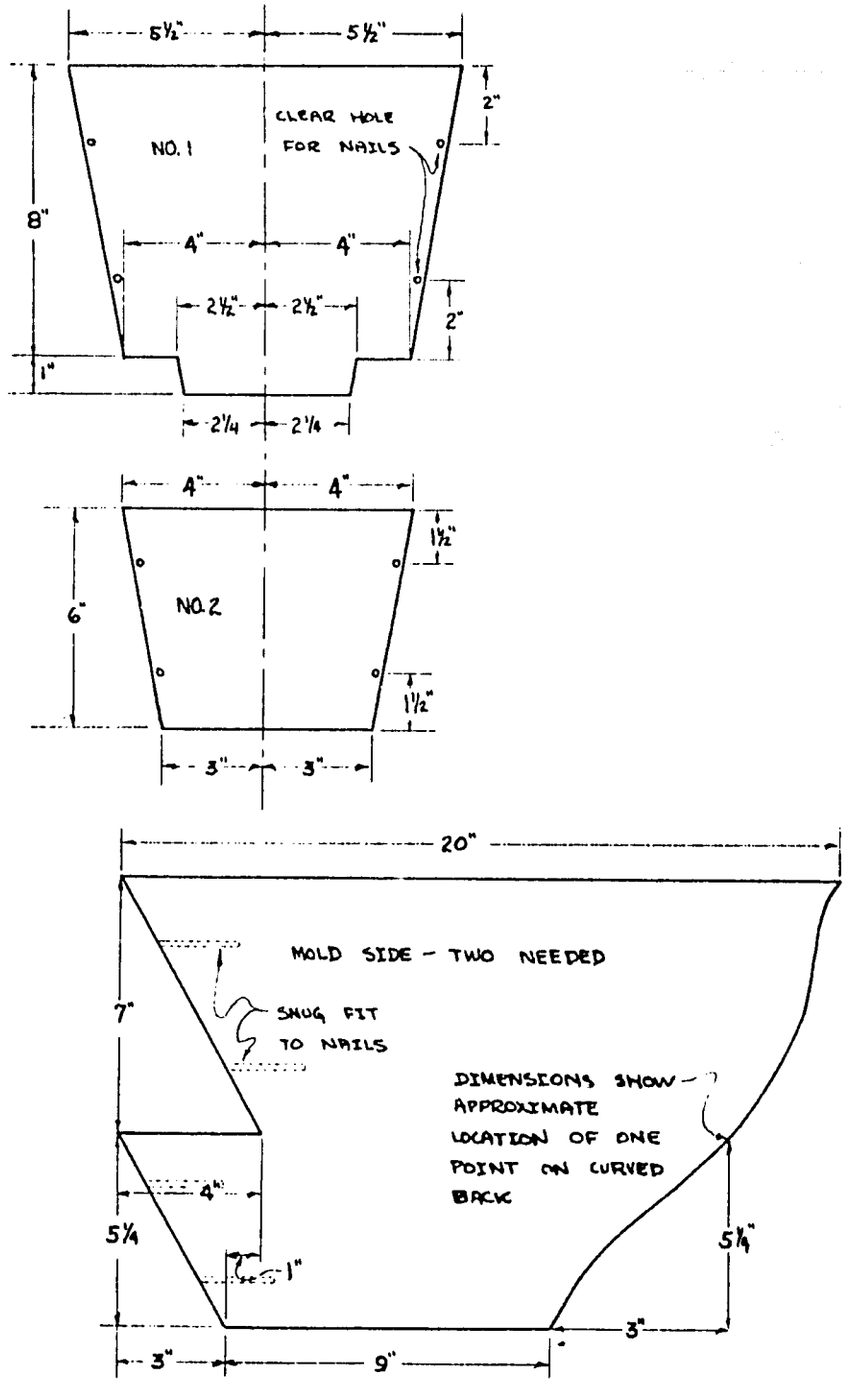

FIG. 2 WOODEN MOLD PARTS

(Figure 3). Keep a straw handy to gauge the thickness of the walls while digging, as it is difficult to judge otherwise.

Dig out the large interior first, then the outlet. The finished interior of the bowl looks like Figure 4.

Be sure you can insert three fingers vertically (2 inches) through the hole leading to the outlet. And be careful to release front piece No. 1 by inserting the spoon around the edges, Figure 5.

After the interior has been dug out, the walls will have slumped down about an inch. Use the cement taken from the interior to build the walls back up; then smooth all exposed surfaces with the back of the spoon, Figure 6. In order to be completely sanitary, the bowl must be as smooth as possible so that germs cannot accumulate in any crevices.

To apply the finishing coat, one of two methods may be used: immediately after smoothing, sprinkle dry cement over the still wet surfaces and smooth again with the spoon. Or, let the bowl set for half an hour and apply a mixture of pure cement and water -- a coconut husk brush is good enough. Either method gives good results. See Figure 6.

The finished bowl should be left in the mold to dry 48 hours. It cam be removed after 24 hours only if extreme care is taken. Pull out the front nails and remove pieces No. 1 and No. 2; pull the sides and back away from the bowl.

Since digging by hand is rather a tedious method, and such great care must be taken to insure consistent thickness of the walls, it is better and faster to use an interior mold. After the first bowl has hardened thoroughly, fill the outlet with dry sand so that the cement cannot flow in and prevent the interior mold from being removed. Line the large interior with paper and fill it with cement -- a four to one (4:1) mixture is good enough. See Figure 9. Insert a heavy wire loop in the top so that the interior mold can be positioned on the exterior mold with an iron bar or bamboo pole.

When an interior mold is used, it is only necessary to dig out the outlet. It is a good idea to have several interior molds, but not necessary to have one for each exterior mold. The interior mold should be removed after 15 to 20 minutes so that the bowl can be smoothed and finished. Then it can be used to make the next bowl.

To use the interior mold, fill the wooden mold about five inches from the bottom and insert the interior mold in the correct position. See Figure 8. Push the cement around the mold with a stick and pack well to keep out air spaces. After the molds are removed, the finished bowl should be left to dry until it is rock hard -- a week is usually safe -- before delivery.

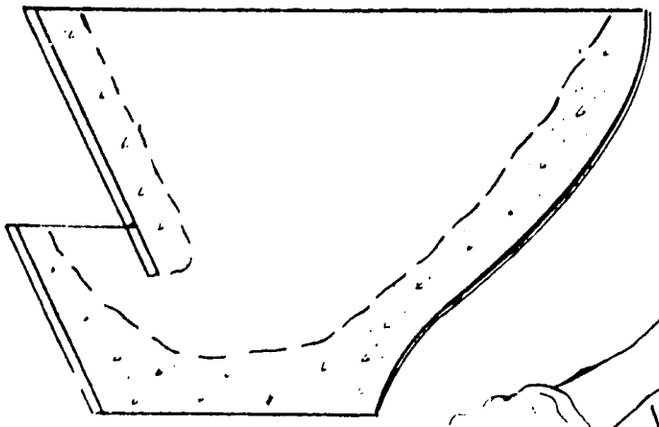

FIG 4

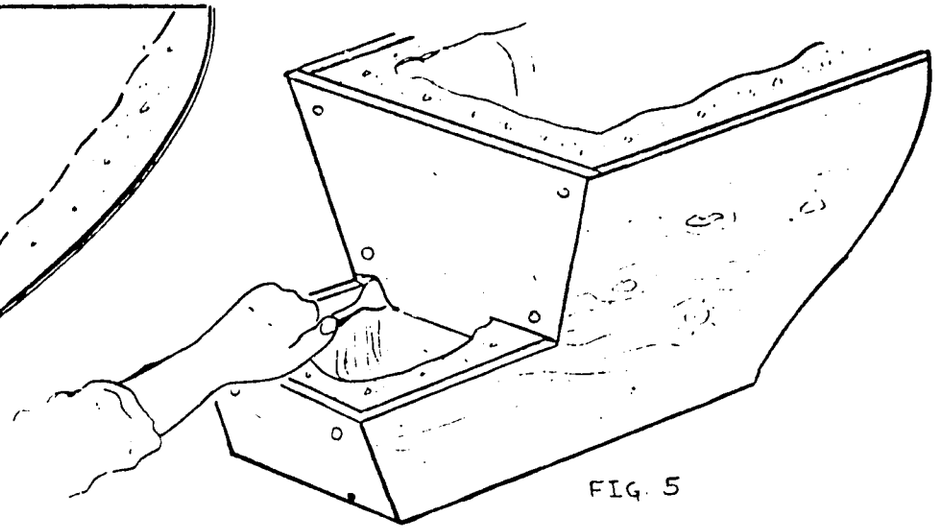

FIG. 5

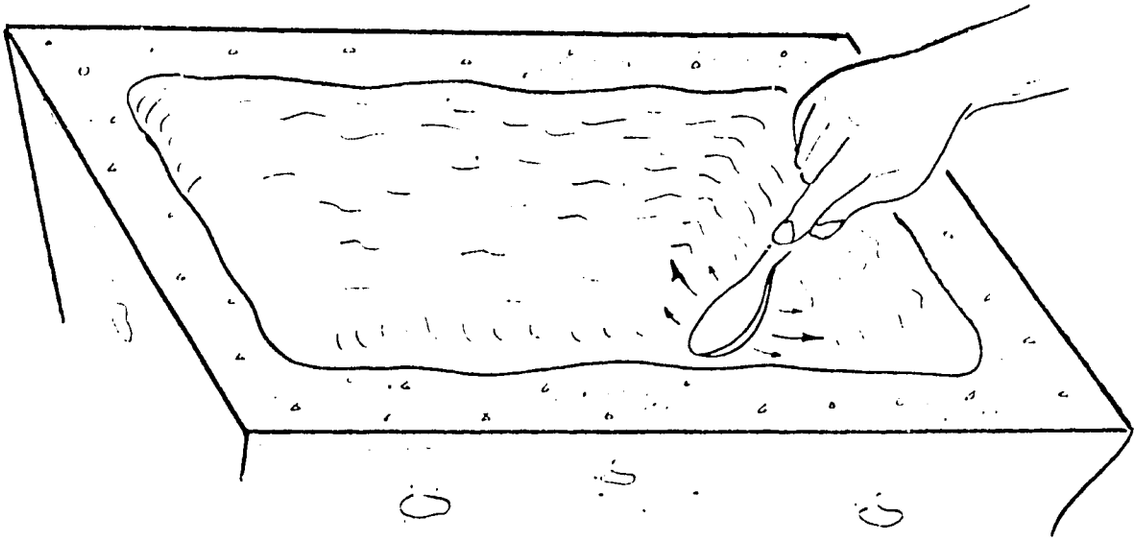

FIG. 6

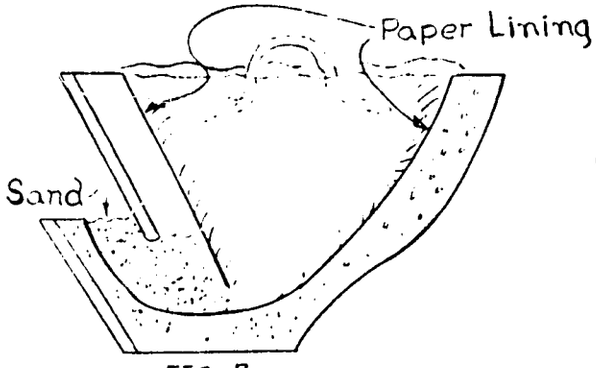

FIG. 7

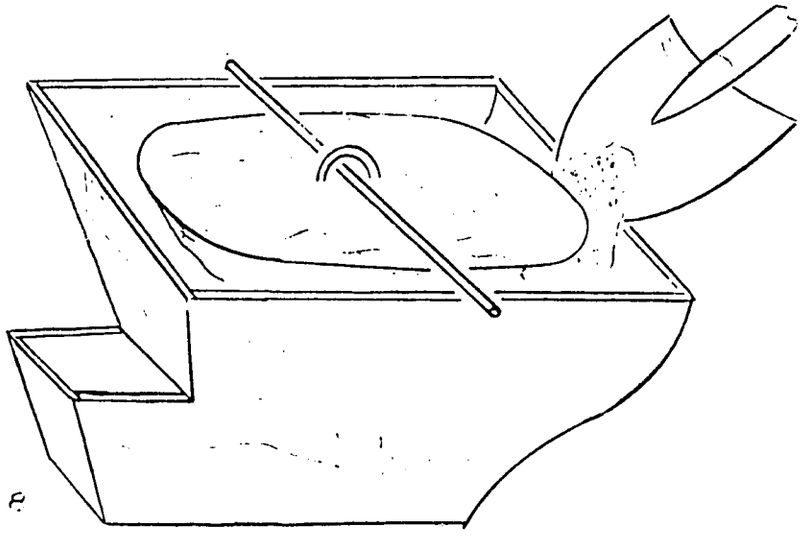

FIG. 8

For a luxury product, use white or red cement for the finishing coat; several coats are necessary.

The boys manufacturing bowls in Malitbog recently changed the mixture from 2:1 to 2½: 1 and no bowls have broken yet. A wider ration than this might sacrifice too much strength for profit; dissatisfied customers may result and profits may drop. There are many ways to strengthen cement and experiments may bring a cheaper and better product. Adding short coconut husk or abaca fibers is one possibility.

Installing the Toilet - For use in private homes, dig a pit about five feet deep and three feet square (the deeper the pit and the smaller the width the better, since a small slab is cheaper). It can be dug even under the house -- especially for use in cities -- sice the toilet gives off very little odor, unless of course this position endangers the household water supply. The pit may be lined or unlined, depending upon the soil. Hard clay soil need not be lined. But, if the house is near the sea or on sandy soil, the pit should be lined with bamboo poles, hollow blocks, etc. as shown in Figure 9.

Place boards around the outside of the pit six inches from the edge of the pit to form the perimeter of the slab. Place large pieces of bamboo split in half across the pit as a base for the slab. Place the bowl between two of the bamboo pieces with a piece of wood under the front and back; nail these to the bamboo. After the bowl is positioned in this way, pour water into it to be sure it will seal off the outlet. The top of the bowl should be three inches above the bamboo base. See Figure 10.

Now put bamboo slats across the pit at right angles to the large pieces of bamboo, completely covering the pit. Cover this with several thicknesses of newspaper. Pour cement around the bowl until the slab is about four inches thick. A mixture of two kerosene cans of gravel, two of sand and one of cement is good. The slab can be reinforced by placing bamboo slats between two layers of cement. Make sure that the outer edge of the slab is higher than the bowl and slants toward the center, so that the toilet can be easily cleaned. Apply a finishing coat of pure cement to the slab. Many people prefer to add foot rests and a urine guard--there is room for imagination.

It is a good idea to have an oil drum or small cement tank nearby to supply the toilet with water. Do not use the toilet for at least three days -- a week is best.

The 5 x 3 foot pit should last a family of eight about five years. One person uses approximately 1 cubic foot every year. When the pit is full, the entire slab can be easily moved to another pit.

It is extremely important to have an ample water supply at hand, since approximately one litre of water is required to flush the toilet, and the necessity of going out to get water discourages its proper use.

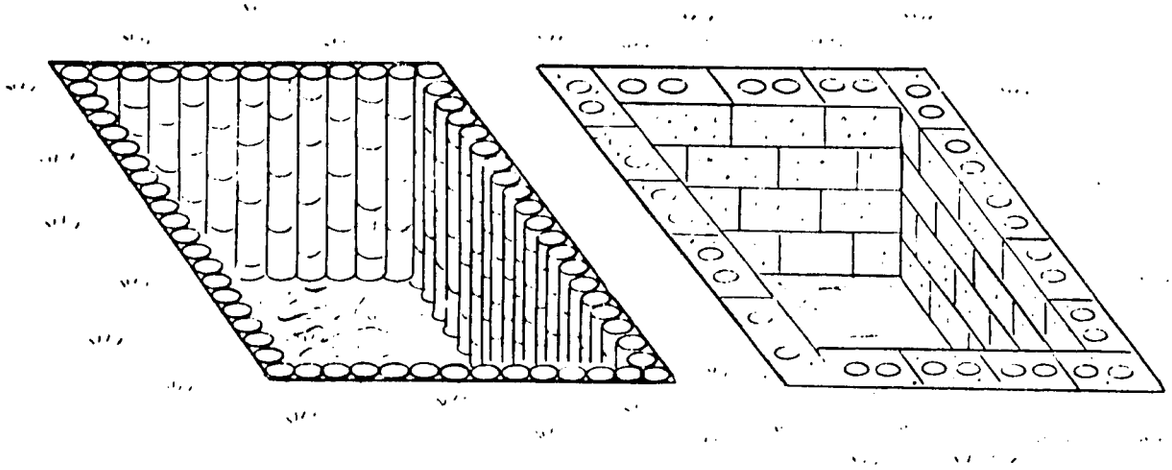

FIG. 9

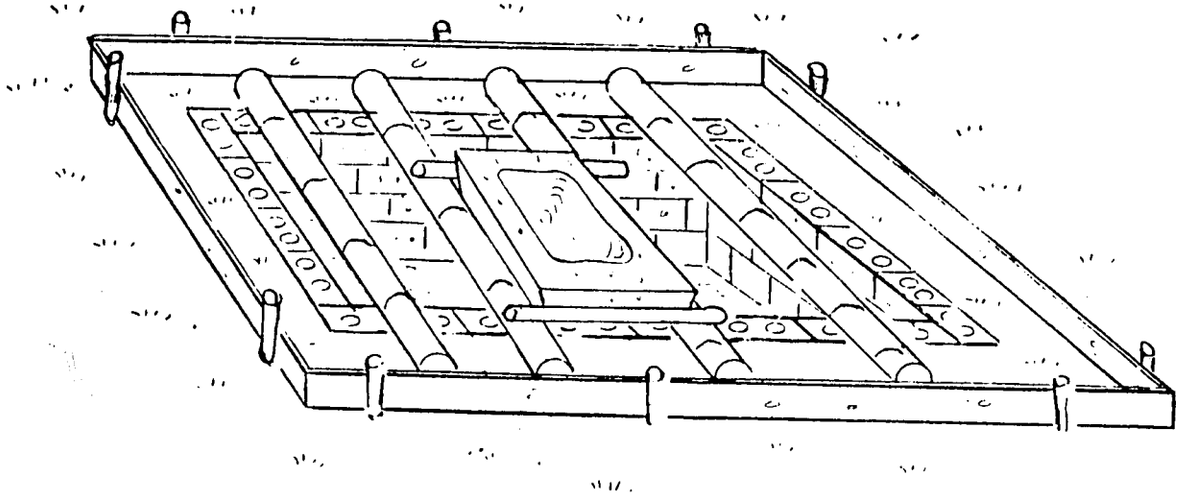

FIG. 10

Evaluation

This design was brought to the Philippines from Europe by one of the Philippines Department of Health's Regional Sanitary Engineers. It is both simple and efficient and was designed specifically for use in areas such as the rural Philippines. The design was used in a successful campaign, undertaken jointly by municipal organizations and Peace Corps Volunteers, to spread the use of sanitary toilets. In November 1962, five months after the start of the campaign, over 400 such toilets were installed and in use. The report on the campaign is recommended reading for anyone interested in promoting acceptance and local manufacture of water sealed latrines.

Material From - "Campaigning for Water-Sealed Toilets" by Gordon Zaloom, Peace Corps Volunteer