AGENCY FOR INTERNATIONAL DEVELOPMENT
WASHINGTON, D. C. 20523
BIBLIOGRAPHIC INPUT SHEET

FOR AID USE ONLY
Batch 70

1. SUBJECT CLASSIFICATION
A. PRIMARY: Development and economics — DM00-0000-0000
B. SECONDARY: Industries and industrialization

2. TITLE AND SUBTITLE
Power transmissions for cottage industry

3. AUTHOR(S)
(101) AID/TA/OST

4. DOCUMENT DATE: 1961
5. NUMBER OF PAGES: 41p.
6. ARC NUMBER: ARC 621.8.I61

7. REFERENCE ORGANIZATION NAME AND ADDRESS
AID/TA/OST

8. SUPPLEMENTARY NOTES *(Sponsoring Organization, Publishers, Availability)*
(In English and French. French,41p.: PN-AAE-806)

9. ABSTRACT

10. CONTROL NUMBER
PN-AAE-805

11. PRICE OF DOCUMENT

12. DESCRIPTORS
Power equipment
Power transmission
Small scale industries

13. PROJECT NUMBER

14. CONTRACT NUMBER
AID/TA/OST

15. TYPE OF DOCUMENT

AID 590-1 (4-74)

621.8
I61

INTRODUCTION

In certain broad areas of the world, many people living in rural areas or small villages are engaged in the production of relatively simple articles which either are consumed at home or sold locally. The small units engaged in such production are generally termed "cottage industries," since they are maintained in many instances within a family dwelling, although there is frequently cooperative effort by members of a number of families in a location convenient to the workers involved. Hand labor is usually employed and the power for operation of the tools or other equipment used is the worker's own, with the result that productive capacity is limited. In some cases, this capacity might be advantageously increased by the use of simple machines and a more modern source of power. Many important small industries, such as hand-weaving, do not lend themselves easily to simple mechanization due to the design of the equipment employed: basic re-designing of the equipment would be required for efficient utilization of common power sources. On the other hand, many tools, such as wood-turning lathes and drills, lend themselves to the application of power, and productivity could be increased by such a change in these instances.

With increased productive capacity within an area, there would be increased opportunity for raising the standard of living in that area. With this thought in mind, the International Cooperation Administration asked Stanford Research Institute to prepare a brochure explaining the fundamentals of power application to those "cottage" industries which could benefit from this innovation. This booklet is limited in scope to cover the various methods of transmission of mechanical power from its source to the driven member, and the various companion devices which go to make up a suitable power transmission. The transmission elements described are limited to the simple materials which are available locally at little or no cost, precluding the use of comparatively expensive devices which must

be obtained commercially. Reference is made to the various sources of power which may be available in an area and to the relative economics and practicality of these sources. It is not intended that this work be considered in any way a substitute for the technical literature necessary for installation and operation of modern high-power or high-speed equipment. Rather, the booklet describes the type of equipment which may be improvised by rudimentary techniques from simple materials.

CONTENTS

INTRODUCTION i

I POWER SOURCES 1

II METHODS OF TRANSMITTING MECHANICAL POWER 5

III CLUTCHES AND SPEED CHANGE MECHANISMS 17

IV APPLICATIONS 27

POWER TRANSMISSIONS FOR COTTAGE INDUSTRY

Section I

POWER SOURCES

Sources of power available to homes and small industry in rural areas vary widely; they include water, wind, electricity, human and animal muscle, and fuels such as petroleum, peat, coal, and wood for making steam or for operating internal combustion engines. Each of the things shown in Fig. 1 can be easily converted into rotary motion by suitable machinery. Rotary motion is convenient to use, and is the starting point for the power transmissions explained in this booklet.

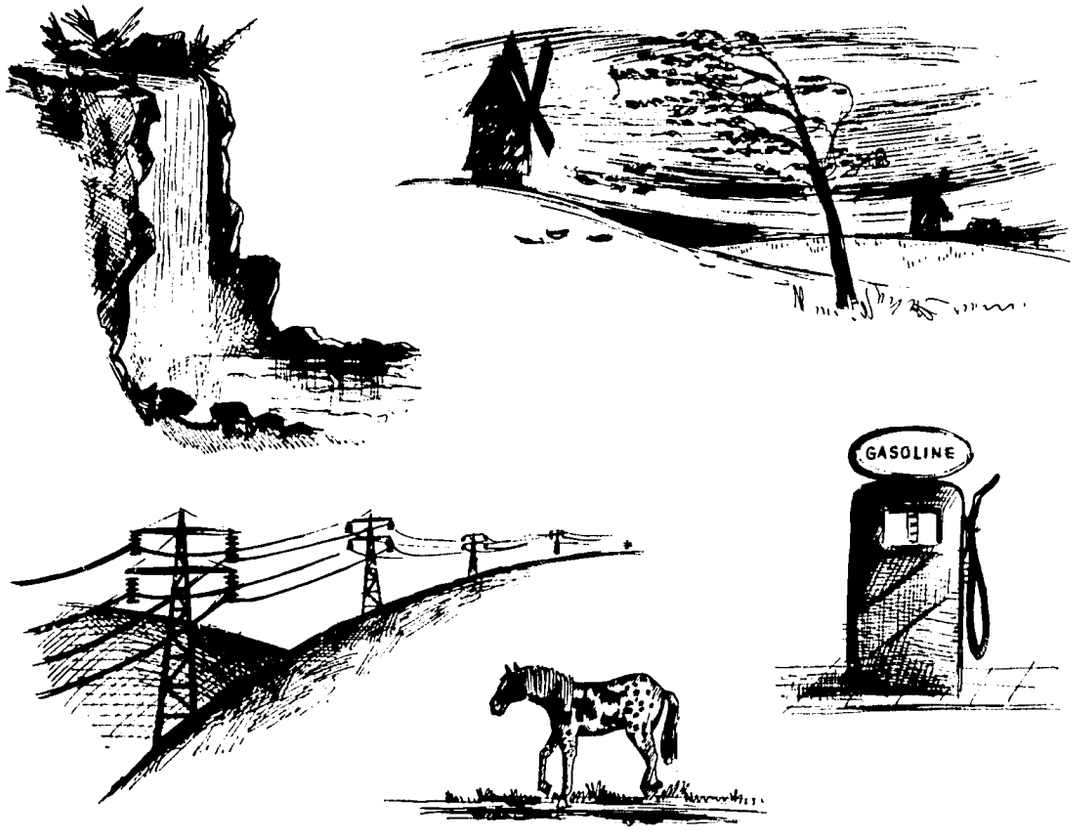

FIGURE 1

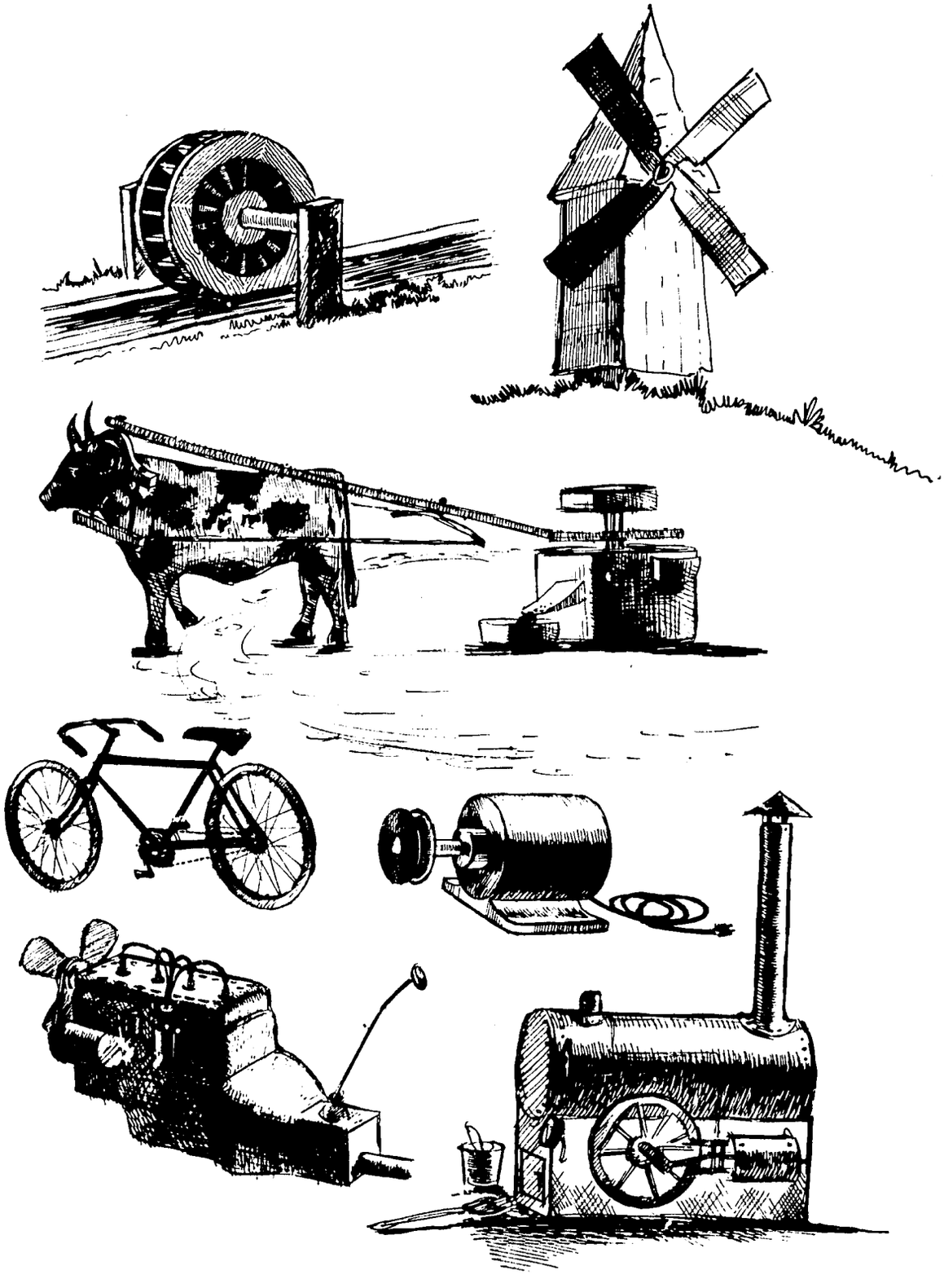

FIGURE 2

In deciding to apply power to tools and equipment, it is important to consider the various types of power and driving equipment available. In some areas only one useful form of energy or fuel is available, but in other areas there are many sources of power. The following comments are intended to aid in the choice of the most practical and economical source of power.

In many countries machinery is powered by electric motors, gasoline engines, diesel engines, and steam engines, as well as water wheels, wind mills, and animals. Water wheels, wind mills, and animals are used mostly on farms or in mills built many years ago, but are being replaced by better sources of power except in places where other sources of power are difficult to obtain. The bicycle is used in all countries and is an excellent example of machinery that can convert human muscle power into rotary motion.

Where electricity is available, the electric motor offers many advantages for small industry: it is very economical to buy and to operate; it requires little maintenance; it can be easily installed close to the machinery being used; and it can be started or stopped quickly. In addition, electric motors are available in a very wide range of power, from 1/20 to more than 5 horsepower, and all of them are easy to operate. An experienced person should help choose the motor, because the kind chosen depends on the speed and power needed, the kind of electric power available, ventilation and dustiness of the place where it will be used, and the kind of work the motor will do. The 1/4-horsepower motor, operating on 110 or 220 volts and producing 1,725 revolutions per minute at its shaft, is very good for many uses in small industry. Motors of this type usually operate at one speed only, but variable-speed motors can be obtained at a higher price. (Methods of producing several speeds from a single-speed motor are described in Sec. III.) Any small workshop in an area served by electricity should give first consideration to electric motors for supplying power to equipment.

Gasoline or diesel engines have many of the advantages of electric motors, but require routine maintenance and the attention of a trained mechanic to make them give satisfactory service over long periods of time. Engines of this

type are used for equipment that requires large amounts of power (up to 25 horsepower or more) and particularly for equipment which will be operated for a long time without stopping. Gasoline or diesel fuel must be available at reasonable cost. These engines, when put on wheels or skids, are very useful for supplying power to equipment that must be moved frequently from one location to another, such as a mobile sawmill. Gasoline engines from old automobiles are often used for this purpose. Gasoline and diesel engines can be started or stopped conveniently and can be operated at any speed up to 2,000 or 3,000 revolutions per minute.

If electric power or gasoline or diesel fuel is not available, steam engines should be considered. Steam engines are used primarily for stationary machinery and can use many materials for fuel, including wood, peat, and coal. If a continuous supply of steam for processing or heating is already available, a steam-powered engine is quite practical. Steam engines operate at any desired speed, but unless a steady source of steam is available, they are slow to get started: a fire must be built to make steam before the engine can supply power. Steam engines require the attention of a trained mechanic, but supply large amounts of power for long periods of time.

Bicycles are not sources of power, but can be used to convert human muscle power into rapid rotation for powering simple equipment. As will be shown later, a whole bicycle can be simply set up in a frame to supply power to equipment, or, the pedals, chain, and sprocket wheels can be removed and used as a permanent arrangement for the same work.

The following sections will describe methods of linking the power source to the driven member or tool, methods of changing the speeds used, and methods of interrupting the flow of power to the tool. This booklet is not intended for use with commercial equipment: there is no substitute for the technical booklets supplied by equipment manufacturers with their machinery. The instructions in this booklet are for the people who have to build their own machines. For applications requiring rigid conditions, always refer to equipment suppliers' booklets. Engineers should be consulted for information on any special requirements involved.

Section II

METHODS OF TRANSMITTING MECHANICAL POWER

All the common power sources described in Sec. I supply motion in the form of a rotating shaft or wheel. Now the problem occurs of connecting this power to the tool. Sometimes the tool or machine to be driven is attached directly to the rotating shaft or wheel. But sometimes the tool is located a distance from the source of power and a way of carrying the power over this distance to the tool must be found.

Shafts, belts, ropes, chains, cables, friction wheels, gears, and links are connecting devices (called "transmissions"). They are used to transmit mechanical power from a rotating shaft or other part (called a "driver") of an electric motor, water wheel, wind mill, etc., to some part (called a "follower") of a tool or machine. Sometimes only one connecting device is used; sometimes a combination of two or more is used. The choice of the correct one or combination depends on the following information:

(1) The distance between the driver and the follower

(2) The relative positions of the driver and the follower

(3) The amount of power to be transmitted

(4) The amount of slippage that can be allowed

(5) The kind of stresses the machine will cause

(6) The amount of time, effort, and money available for making, obtaining, or buying the transmission

(7) The permanence of the arrangement.

This section of the booklet describes transmissions that can be made or obtained easily and gives some idea of how and where they can be used.

Shafts

Rotating shafts are often used to transmit power from a motor to a machine or a group of machines. The shaft can connect the motor or other power source directly to the machine or tool, but usually power is taken from the motor shaft by belts, gears, or chains and carried by them to the tool or to another shaft. These are often more convenient and allow the use of clutches and variable-speed mechanisms, which will be described later. A shaft can be a rod of metal such as steel, a piece of wood such as a small tree trunk or a piece of bamboo, a piece of water pipe, or something similar. It can be solid or hollow, but must be straight and well-balanced, so that when it rotates rapidly, it will not vibrate. A shaft can be short or long, but a very long shaft might sag in the middle. To keep the shaft straight, it is sometimes necessary to use a supporting bearing at the mid-point of the shaft. Figure 3 shows simple bearings which can be made of wood or other material. One bearing is a strip of leather fastened to a block of wood, with the shaft held between the leather and the wood. The other bearings are blocks of hard wood through which is drilled a hole slightly larger than the shaft. Rapid rotation of the shaft in any of these bearings will cause rapid wear, so oil or grease must be added. If a small hole is drilled from the top of the bearing to the shaft hole, oil or grease can be added without taking the shaft out of the bearing.

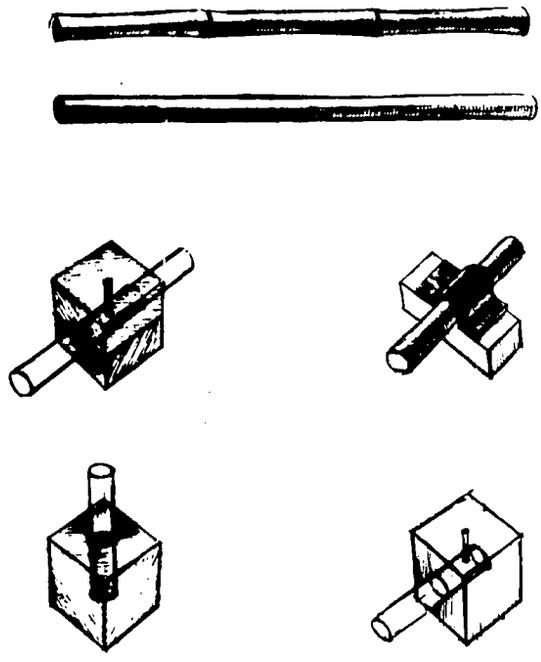

FIGURE 3

A balanced shaft in good condition can transmit any amount of power at any speed of rotation but homemade shafts are best used at low speeds. Other methods of power transmission are usually better

for high speeds and power. Drive shafts and bearings from old automobiles are often good to use, since these parts are made for high-speed and high-power work.

A counter-shaft is a shaft that is not directly connected to the power source or to the tool. A belt or other transmission carries power from a motor to a counter-shaft and another belt carries power from the counter-shaft to one or more tools. By using a counter-shaft, several tools can be operated at the same time from a single power source. In Fig. 4, a single motor turning a counter-shaft by means of a belt supplies power to two lathes.

Flexible shafts are used to transmit very small amounts of power to a hand tool which must be moved around during use. These flexible shafts, usually purchased from a supply house, are made of a special wire rope coiled in such a way that it will not unroll when it revolves. A flexible speedometer cable from an old automobile can be attached to a small cutter, grinder, polisher, or drill and can be used for some very small jobs. Flexible shafts are very difficult to make by hand, so other simple systems, such as belts and pulleys, are better to use, if possible.

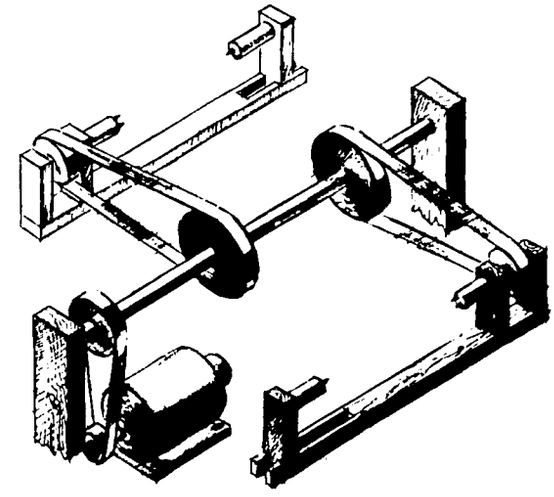

FIGURE 4

Belts, Ropes, and Pulleys

Belts and ropes are used more than other transmissions for carrying power from one shaft or wheel to another. They allow the convenient coupling of machines that are far apart or arranged at an angle to one another. Belts are satisfactory if some slippage can be allowed between the driver and follower; however, if slippage cannot be permitted and a firm connection must be used, gear wheels, linkwork, or sprocket wheels with chains should be used.

Many materials are used for belts: leather, rubber, canvas, cotton, and steel. The intestines of sheep, cats, and other animals are quite strong and tough and are sometimes used as belts or ropes for simple machines. Belts can be flat, round, "V," or other shape in cross-section, and are usually about three-fourths as wide as the wheel (called a "pulley") over which they pass. They should be strong and flexible.

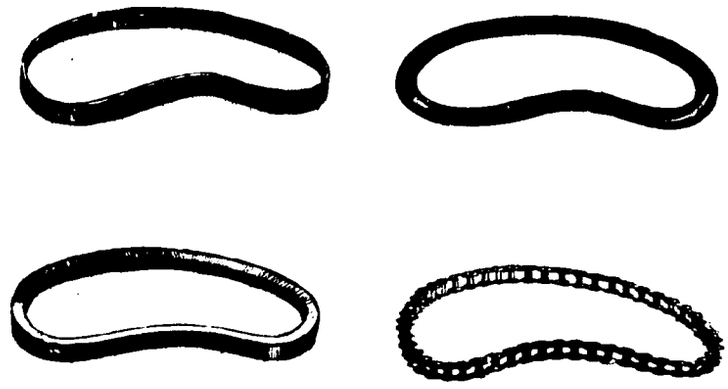

FIGURE 5

Power from one shaft can be carried to another shaft simply by running a belt or rope around the two of them, but it is usually better to mount a pulley wheel on each shaft and to run the belt around the pulleys. This decreases slippage and, if the pulleys are of different sizes, the speed of one shaft will be made different from the speed of the other. This change in speed by using pulleys of different sizes is quite useful and will be discussed in Sec. III.

A pulley that is rigidly fastened to a shaft is called a "fast" pulley; a "loose" pulley can turn freely on a shaft without affecting the movement of the shaft. Simple pulleys are shown in Fig. 6, with examples of how a pulley can be made fast by means of a peg driven into a hole drilled through both pulley and shaft. If the pulley is put near the end of the shaft, the shaft can be made with a square end instead of a round one, and if the pulley is made with a square hole and is fitted on the shaft, it will be fast. To keep the pulley from falling off, the end of the shaft is made to project beyond the side of the pulley, and a peg is driven through this projecting end.

The kind of belt or pulley used depends upon the power and speed to be transmitted, the amount of slippage allowed, and the distance between the shafts to be connected. High speeds and powers require pulleys that are strong, well-balanced, and that have smooth "faces" (the surfaces over which the belt passes). Pulleys for high power and speed have faces which are "crowned" (are of greater diameter at the center than at the sides). A flat belt will stay on the center of a crowned pulley face but will ride to one side or maybe run off a flat-faced pulley or a pulley that has a concave face (a face with less diameter in the middle than at the sides). If great power or high speeds are used, help in choosing pulleys and belts should be obtained from a person experienced with transmissions.

Simple, locally-available materials can be used for low speeds and powers. The pulleys and rubber V-belts from fans and generators on automobile engines are often satisfactory. A pulley used with a V-belt has a slanting, deeply-grooved face and the belt travels snugly in the groove

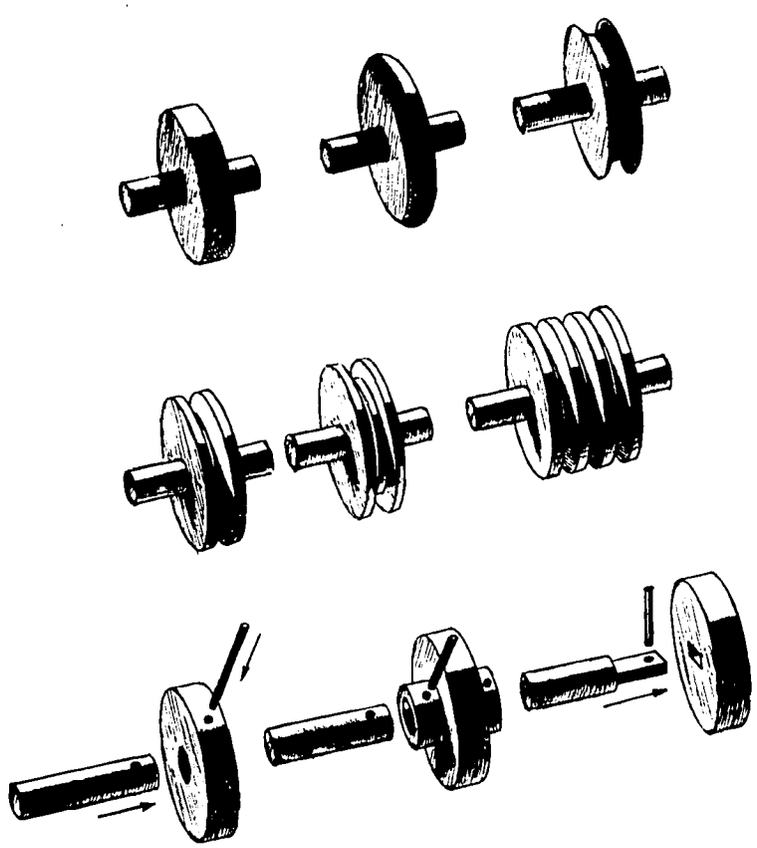

FIGURE 6

around the pulley. V-belts and pulleys are used primarily where the two pulleys are rather close together and where a flat belt might slip too much. Where the pulleys are far apart, a flat belt is used since the weight and the sagging of the belt increases the "gripping" power on the pulleys and decreases slippage.

If a little more slippage is allowed, round belts, or ropes, can be used for carrying power between pulleys that are either far apart or close together. The pulleys must have concave or grooved faces and the ropes used should be made of Manila hemp or cotton, tightly woven.

Wire ropes or cables are used to transmit high power between pulleys that are very far apart, but it is necessary to use special steel pulleys with grooves in leather-covered faces. These cables and pulleys are expensive, and usually must be made by a commercial manufacturer and installed by experienced people, so they will not be discussed in this booklet.

Friction Wheels

A simple way to transfer rotary motion from one wheel to another is by using "friction wheels" which roll against each other and depend

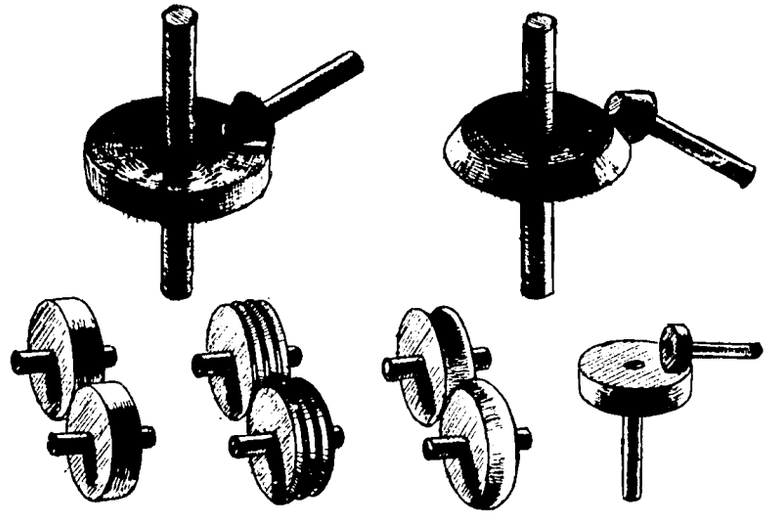

FIGURE 7

upon friction between the surfaces for their transmitting power. To transmit the greatest amount of power, these wheels must press together with considerable force, which, unfortunately, makes the bearings supporting the shafts wear down quickly. The surfaces of friction wheels should be made of a material that is not slippery, such as rubber, leather, wood, cork, or heavy cloth, while the wheels themselves can be made of any material that is strong.

When power is transferred from one shaft to a parallel shaft, the wheels contact each other face to face. If one shaft is perpendicular to the other, the wheels contact each other side to face. If the shafts are at some other angle, the face of one wheel or the faces of both wheels can be made on a slant so the contact surfaces are correct for the angle of the shafts. This last connection is not very good because it is difficult to make the motion of one wheel exactly follow the motion of the other, and the strain on the bearings and shafts is great. Better ways of connecting shafts at various angles will be discussed under "Gears".

Friction wheels are not used often because other ways to transmit power are usually better. However, they are useful for gradually changing the speed of some low-power machines. How they can be used for this is described in Sec. III.

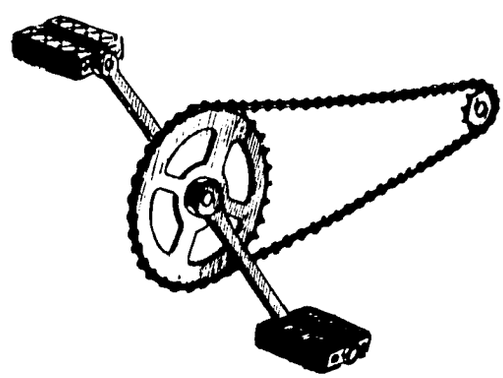

Chain Drives

Chain drives transmit power from one shaft to another without slippage and without much loss of power. They are usually more expensive than belts or ropes and should be used only if a connection without slippage is required. Only simple chains are discussed in this booklet, such as those found on bicycles or in

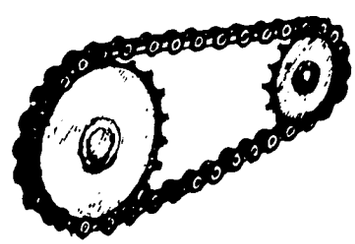

FIGURE 8

automobile timing parts, because these are often easy to obtain. A special pulley called a "sprocket" wheel must be used with a chain drive, and the chain must fit exactly around the sprocket. If a chain is taken from a bicycle or automobile engine, the sprocket should also be taken, because if the wrong sprocket is used and the chain does not fit the sprocket, both sprocket and chain will wear out quickly. Chains will also wear out quickly if they do not get oil or grease, or if dust or dirt gets into the links, so it is necessary to keep them clean and to put oil or grease on them.

A chain can be made shorter by removing links, or it can be made longer by adding links at the place on the chain where there is a "key" link. This makes a chain useful for connecting shafts that are any distance apart.

Gears

Gears are wheels that have notches or teeth on the faces so they can transmit power from one shaft to another without slippage. The shafts can be at any angle to each other, because the gears can be made in different shapes to fit together at any angle. Gears are made of hard wood, or, if the power and speed are high, they are made of strong metal such as steel. If low power is to be used and if slippage is not important, it is better to use belts and pulleys because they cost less, are easier to make, and will usually work well.

There are many kinds of gears, and most of them are very difficult to make. Some of the more complicated of these are "worm" gears, which permit great differences in shaft speeds, and "bevel" gears, which permit moderate speed changes. Both worm gears and bevel gears are used to connect shafts that are at an angle to one another. Some of these strong gear systems can be obtained from old automobiles, trucks, tanks, and airplanes, but if any of these are used, it is best to get advice from a person experienced with transmissions. Very simple gears made of wood can be used in simple machinery, so these will be described. Some of them are shown in Fig. 9.

Pin gears have teeth or pegs on the faces of the wheels. Wooden wheels with teeth cut into the faces or with pegs put into holes drilled in the faces can be used for low power work. These gears are often used and are easy to make from materials that are easy to obtain. For the gears to work properly, the teeth must be the same size and the same distance apart on the wheels. Pin gears made with teeth or with square pegs on the faces are used to connect shafts that are parallel.

Crown gears are like pin gears but crown gears have the pegs in a circle on the side of the wheel. One crown gear can be used with one pin gear to connect two parallel shafts. To connect two shafts that are perpendicular to each other, two crown gears or two pin gears are used. To connect shafts that can be at any angle to each other, a pin gear wheel is often used with a lantern gear. A lantern gear is made of two wheels with the side of one kept some distance away from the side of the other by a circle of long pegs.

Pin gears, crown gears, and lantern gears can be used to change the speed of rotation if one gear wheel is made a different size from the other. How to choose the sizes is explained in Sec. III.

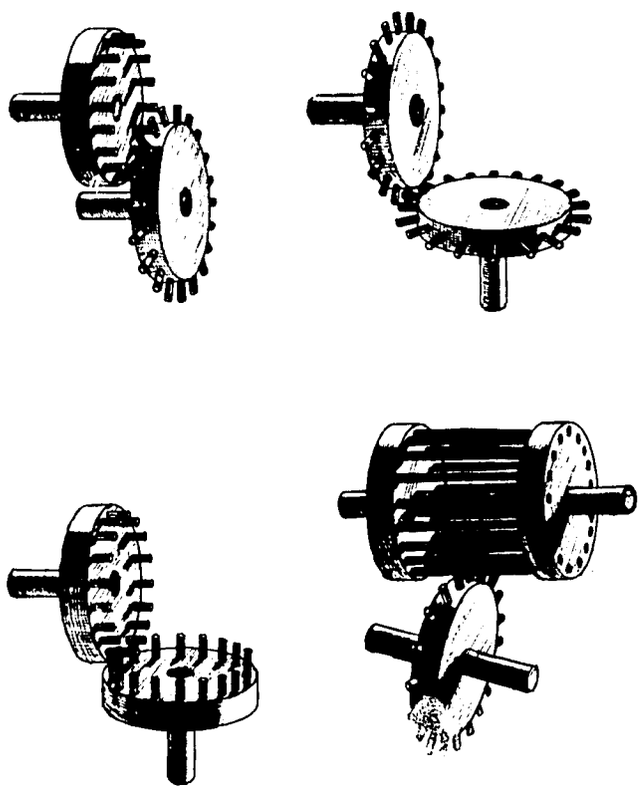

FIGURE 9

Link-Work

Rods, cranks, and levers are called "link-work" and are the lightest-running transmissions known, since they usually make only a very small amount of friction. They last longer than other power transmissions, there is no slippage, and they should be used instead of belts or gears where possible. Link-work is used mostly to connect shafts which are parallel, although more complicated link-work can be used for shafts that are not parallel. Only simple links will be discussed here.

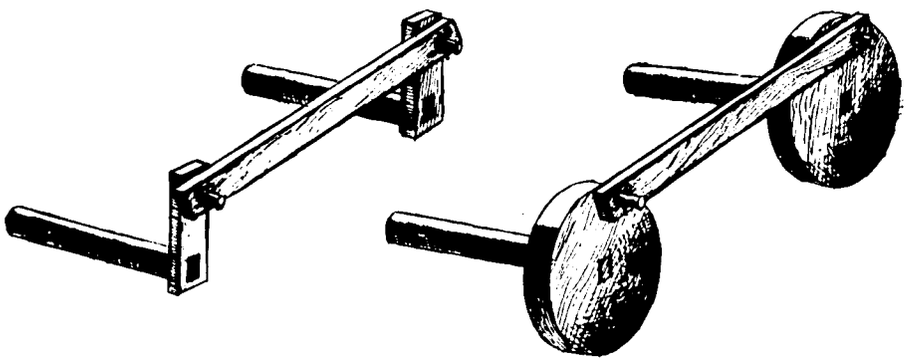

FIGURE 10

To join parallel shafts so they will turn at the same speed, cranks of equal length connected by a rod can be used. A crank is a short rod, one end of which is rigidly connected to the end of a shaft perpendicular to it; the other end has a peg or pin projecting from it, parallel to the shaft. Riding on this pin is a rod that connects to a similar crank on another shaft. If the cranks on both shafts are made exactly the same length, rotary motion in one shaft will produce the same rotary motion in the other shaft.

Instead of cranks, two wheels can be used, one fastened securely to the end of each shaft. A pin projects from the side of each wheel, and a connecting rod rides on these two pins. The distance from the pin to the shaft must be the same on each wheel if rotary motion of the driver is to produce rotary motion of the follower. When either cranks or wheels are used, it is possible to have the two shafts rotate in either the same or the opposite direction simply by rotating the

follower by hand in the desired direction as power is applied by the driver. Link work using cranks and wheels is shown in Fig. 10.

If the crank of the driver is made shorter than the crank of the follower, rotary motion in the driver will produce back-and-forth motion in the follower. If wheels are used, this back-and-forth motion in the follower can be produced by placing the pin on the driver wheel closer to the shaft than the pin on the follower wheel. Ways to produce back and forth motion using cranks and wheels are shown in Fig. 11.

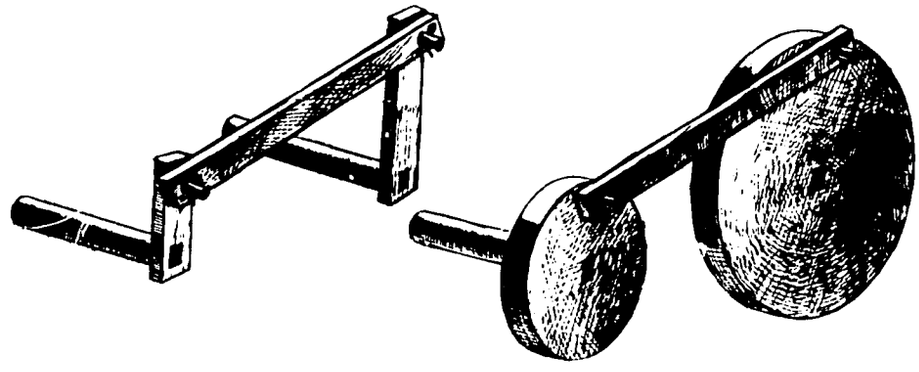

FIGURE 11

When wheels are used, joined by a connecting rod, a speed change can be obtained by making the wheels of different diameters, and adding a belt and pulley. This arrangement is shown in Fig. 12. The pins upon which the connecting rod rides are the same distance from the shafts so rotary motion of one will produce rotary motion in the other. But one wheel is larger and is connected by a belt to a third wheel or pulley which is smaller. The rotation of the first and second shafts will be the same, but that of the third shaft will be faster.

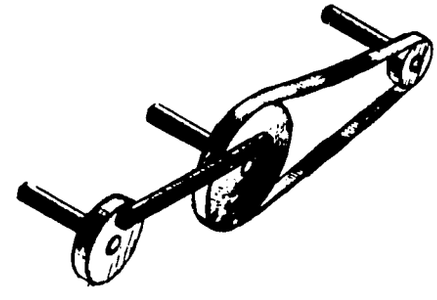

FIGURE 12

Section III

CLUTCHES AND SPEED CHANGE MECHANISMS

Clutches

Since it is often desirable to operate a tool at any of several speeds, or to stop it and start it quickly, it is well to make these changes without changing the speed of, or stopping or starting the source of power. Starting and stopping a tool is done by a "clutch." "Positive" clutches give only a sudden and complete application of power, while "friction" clutches permit a gradual application of power. A positive clutch is made of two wood or metal wheels both fast on separate shafts. The side of one wheel is directly opposite the side of the other, and on these facing sides are "teeth" which can be notches or projecting pegs. When power is to be transmitted from one wheel which is rotating to the other wheel which is not rotating, the wheels are brought together so that the teeth catch on each other, thus making both wheels turn together. This type of clutch can be used only for low-speed, low-power work.

As the speed of rotation or the power increases, it is difficult to mesh the teeth without breaking them, or without severely jerking the machine. Even at low speed and power, the jerk can be great, so a slightly different arrangement may be more satisfactory. Two pegs are inserted far apart and opposite each other on the side of one wheel, and are connected by a belt running tightly around both. Then two pegs are placed opposite each other, but closer together, on the side of the other wheel. When the wheels are brought together, the pegs on one wheel will strike against the belt of the other wheel, and the belt will take up some of the shock. This kind of positive clutch is shown in Fig. 13, and the way to make this clutch is shown in the cut-away picture.

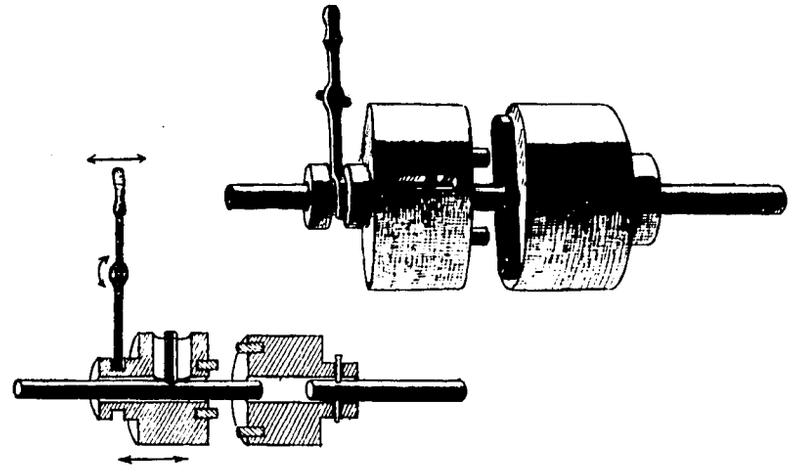

FIGURE 13

A simple and very useful clutch is the friction clutch, which allows gradual application of large amounts of power at high speed without jerking the equipment. Friction clutches can be of several types. One kind is the disk (or plate) clutch which consists of two wheels whose flat sides are opposite each other, both wheels fast on separate shafts. Forcing the disks together makes one drive the other and provides a satisfactory transmission as long as the work being done does not cause slippage between the disks. To reduce slippage, some material such as leather or cork can be attached to the sides that contact each other. Figure 14 shows this clutch.

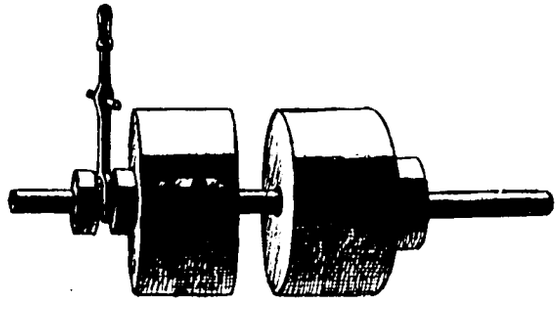

FIGURE 14

For low-power work, the friction wheels described in Sec. II can be used as a clutch. The edge (face) of one wheel is made to move across the side of the other. When the first wheel (follower) is riding on the center

of the second wheel (driver), the follower will not rotate. As the follower is moved away from the center, power is gradually transmitted. If the follower is moved in the opposite direction from the center, the direction of rotation is reversed. This kind of clutch is shown in Fig. 15.

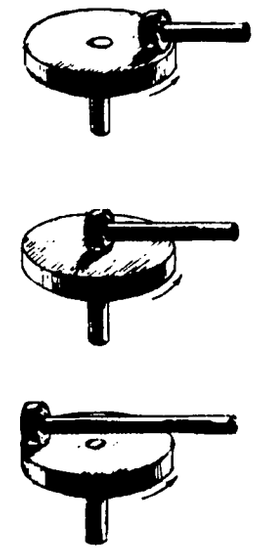

FIGURE 15

Clutch and gear assemblies from old automobiles are very good for heavy work such as that done in mills, but generally such equipment is not useful for low-power work because it weighs a great deal and requires a large amount of power. Figure 16 shows a simple and very useful clutch using pulleys, a belt, and a belt-guide to make a quick change from full power to "off" or from "off" to full power. This clutch is made by placing two pulleys side by side on the same shaft, one pulley fast and the other loose. A rapidly moving belt can be shifted from one pulley to the other by a movable belt-guide so the shaft can be easily started or stopped. When the belt is on the fast pulley, power is transmitted to the shaft. When it is moved to the loose pulley, no power is transmitted.

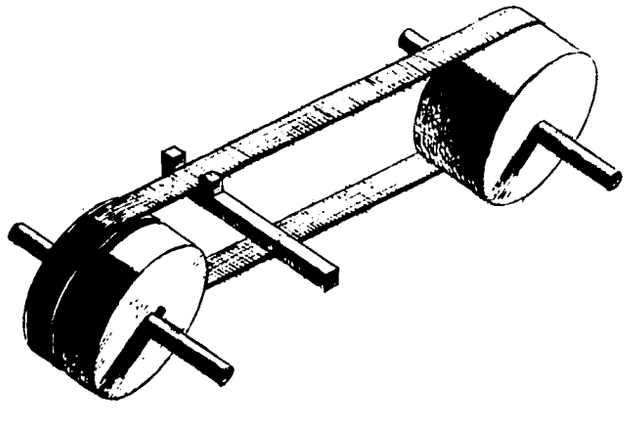

FIGURE 16

A clutch that will reverse rotation instead of starting or stopping it, is made with three pulleys on each shaft, and two belts. The middle pulley on each shaft is loose, and the others are fast. One belt travels directly around the pulleys to

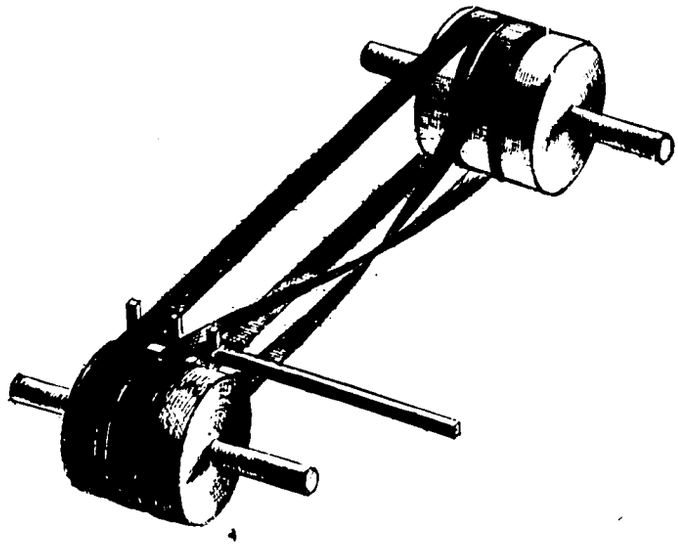

FIGURE 17

make the shafts rotate in the same direction, and one is crossed as shown in Fig. 17 to make the shafts rotate in opposite directions. Only one belt at a time transmits power on the fast pulleys; the other rides on the loose pulleys. If both belts are moved at the same time, the belt that was transmitting power will now be idle on the loose pulleys, and the belt that was idle will now transmit power. Thus the direction of rotation is easily changed while the equipment is running.

A belt-tightener can also be used as a clutch, because its action on a belt can start or stop motion. A belt-tightener is usually a loose pulley with a flat face which can be forced against a loose belt to tighten it. The belt should be long enough so there is slippage and power is not transmitted from one pulley to the other. When the tightener is pushed against the belt, the slack is taken up, the belt "grips" the pulleys, and power is transmitted. Fig. 18 shows this device.

Variable Speed Devices

It is often desirable to change the speed of a tool or machine. Sometimes this can be done by changing the speed of the power source, but this is not always possible or desirable, so another way to quickly change speed is necessary. There are two ways of doing this. The first method changes the speed by steps

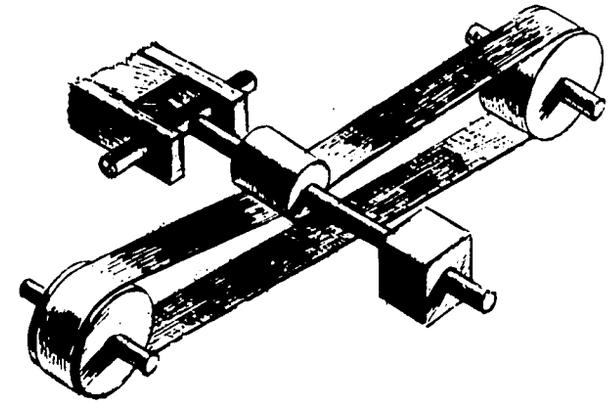

FIGURE 18

and is generally used on lathes, drills, etc. A series of fast pulleys of different diameters are side by side on a shaft, and are driven by a belt from a similar group of pulleys on another shaft. By shifting the belt from pulley to pulley when the machine is stopped, different speeds are obtained. The series of pulleys can be made from a single piece of wood by simply cutting the log to different diameters without separating the different pulleys formed. Two groups of these pulleys are needed and the sizes of the pulleys are important. If there are three pulleys, for example, as in Fig. 19, the diameter of the largest pulley must be different from the diameter of the middle pulley by the same amount that the diameter of the middle pulley is different from the diameter of the smallest pulley. For instance, if the pulleys in a series are made with diameters of 4, 6, and 8 inches, each pulley diameter is 2 inches different from the one next to it. In this way a single belt of the correct length can be shifted from one speed position to another without becoming too slack or too tight, because the sum of the diameters of the two pulleys on which the belt is riding is always the same. If the pulleys are not well made, and the belt slips, a belt tightener can be used when needed.

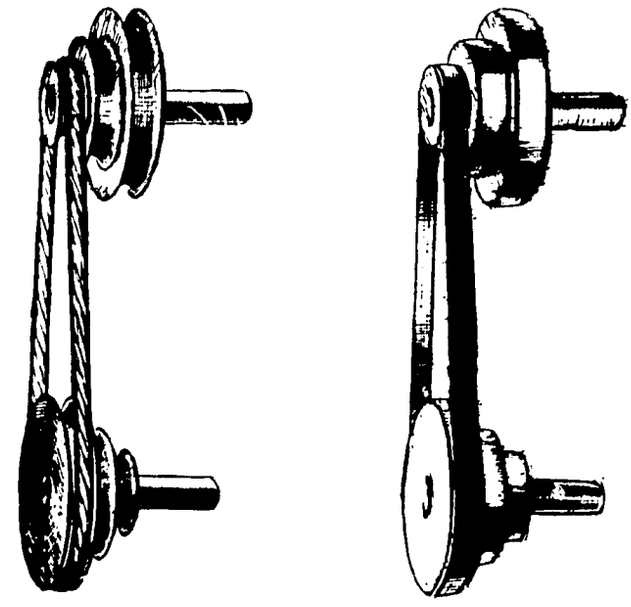

FIGURE 19

When the pulley sets just described are used, it is generally necessary to stop the machine to change the speed. For a sudden change in speed while the machine is in motion, it is practical to use a set of fast and loose pulleys arranged on one shaft and connected by belts to fast pulleys of different sizes on another shaft, as shown in Fig. 20. However this system allows only a single speed change to be made.

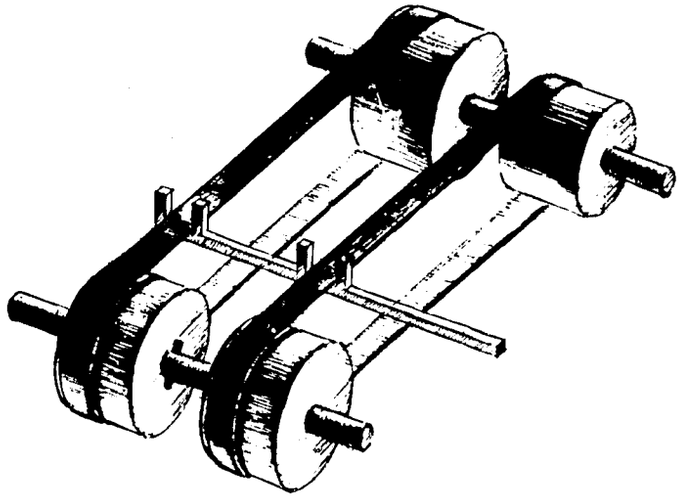

FIGURE 20

Figure 21 shows how to make a gradual change in speed by using two cone-shaped pulleys connected by either a straight or twisted belt. These pulleys can be made from wood, and to work properly they should be the same shape and the same size. They are made fast on parallel shafts, with the large end of one opposite the small end of the other. The twisted belt connecting the two cones must be held in place by a movable belt-guide to prevent the belt from moving sideways on the pulleys. By moving the belt back or forth across the pulleys with the belt-guide, changes in speed are obtained.

The friction wheels described in Sec. II and again in this section under "clutches," can also be used for continuously changing speed. As shown in Fig. 22, the face of one wheel (the follower) runs on the side of the other wheel (the driver). When the two wheels contact at different distances from the center of the driver, different speeds of rotation can be obtained from the one speed of the driver. At the center, the follower will be stopped,

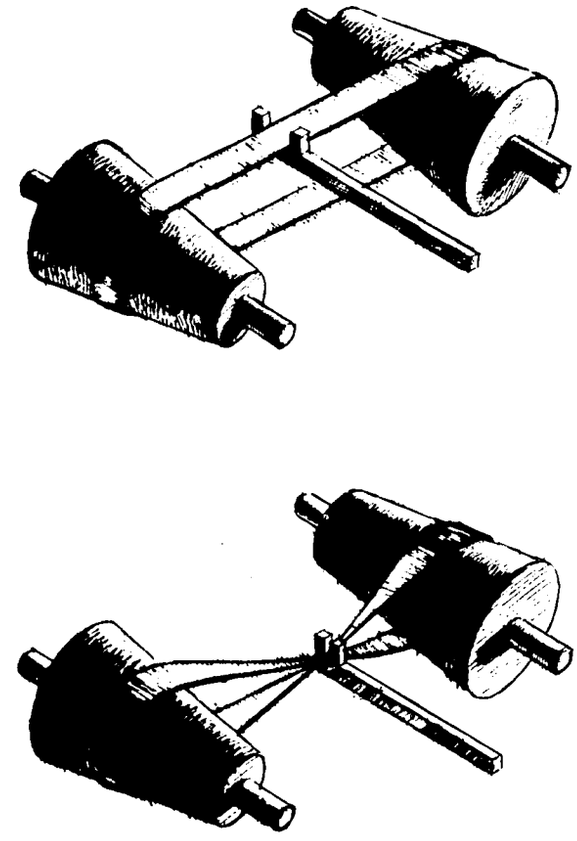

FIGURE 21

and as it moves to the outside edge of the driver, the speed will increase. This equipment is probably the most easily made and will give excellent service for low-power work. It is quite useful for jewelry making and similar work, where quick changes in speed at low power are desired. If large amounts of power are needed for very heavy work, home-made variable speed devices are less practical and it is better to use old automobile transmissions or other heavy gearing.

To change speed without slippage, gear wheels of different diameters are used as described in Sec. II. If the diameter of the follower is made smaller than the diameter of the driver, the shaft speed of the follower will be faster. If the diameter of the follower is made larger than that of the driver, the shaft speed of the follower will be slower. To find out how much change there will be in speed, it is necessary to know the sizes of the gears used, and to make a simple calculation. The following section tells how to do this.

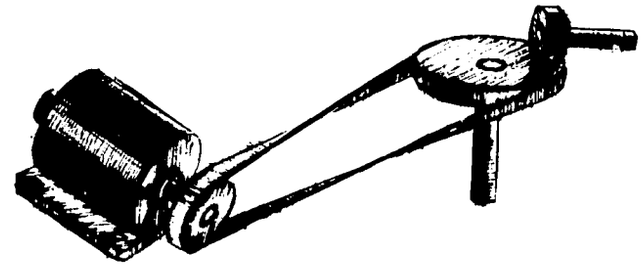

FIGURE 22

Speed Change Calculation

Before making the parts for a transmission, it is important to decide on the speeds desired so the proper size wheels, pulleys, or gears will be used. For all kinds of transmissions, the same principles and calculations are involved.

If two wheels of different sizes are connected so rotation of one causes rotation of the other, the smaller of the two will make more than one revolution for each revolution of the larger. This is true for friction wheels, for gears, and for pulleys joined by ropes, belts, or chains. It is very simple to find how much faster one wheel rotates than the other For any of the combinations shown in Fig. 23, divide the diameter of A by the diameter of B to get the number of turns B will make for each turn of A. If A has a diameter of 2 feet and B has a diameter of 1 foot, one turn of

A produces two turns of B. Also, dividing the speed of B by the speed of A gives the number of times greater the diameter of A is than the diameter of B. Therefore, if A has a speed of 100 revolutions per minute (RPM) and B has a speed of 200 RPM, then the diameter of A must be twice that of B.

The same kind of calculations are used for gears. Dividing the number of teeth on the larger gear by the number of teeth on the smaller gear gives the number of turns the smaller gear makes for each turn of the larger. Or, dividing the speed of the smaller wheel by the speed of the larger gives the number of times more teeth there are on the larger wheel than there are on the smaller. In this way it is possible to find the size of the pulleys or gears that will produce a desired speed, or it is possible to find the speed that will be obtained from pulleys or gears of a desired size. For example, if pulley A has a diameter of 2 feet and is turned at a speed of 100 RPM, and it is desired to have it turn another pulley B at 200 RPM, A should have a diameter two times B, so B will be 1 foot. (2 feet x 100 RPM = diameter of B x 200 RPM, or B = 1 foot.)

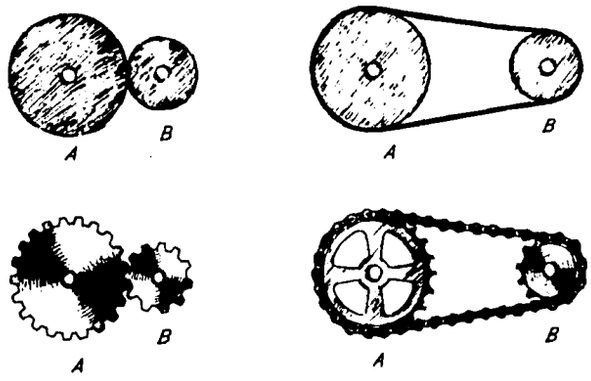

FIGURE 23

Rule: The diameter of one pulley multiplied by its speed of rotation equals the diameter of the second pulley multiplied by its speed of rotation.

Similarly, with gears, if gear A has 60 teeth and rotates at 100 RPM, then to rotate gear B at 200 RPM, B must have 30 teeth of the same size and spacing as those on A. (60 teeth x 100 RPM = number of teeth on B x 200 RPM, or B = 30 teeth.)

Rule: The number of teeth on one gear multiplied by its speed of rotation equals the number of teeth on the second gear multiplied by its speed of rotation.

Section IV

APPLICATIONS

The following illustrations (Figs. 24-38) show how the equipment described in this booklet can be used for some simple machines. The arrangements shown are not necessarily the most desirable or most practical since the choice of any particular set of parts will depend on the design of the machine and the materials available. Rather, these illustrations show some ways in which power can be put to use. It is hoped that these examples will suggest other uses for power and will assist in the choice of a suitable method of power transmission for whatever the need may be.

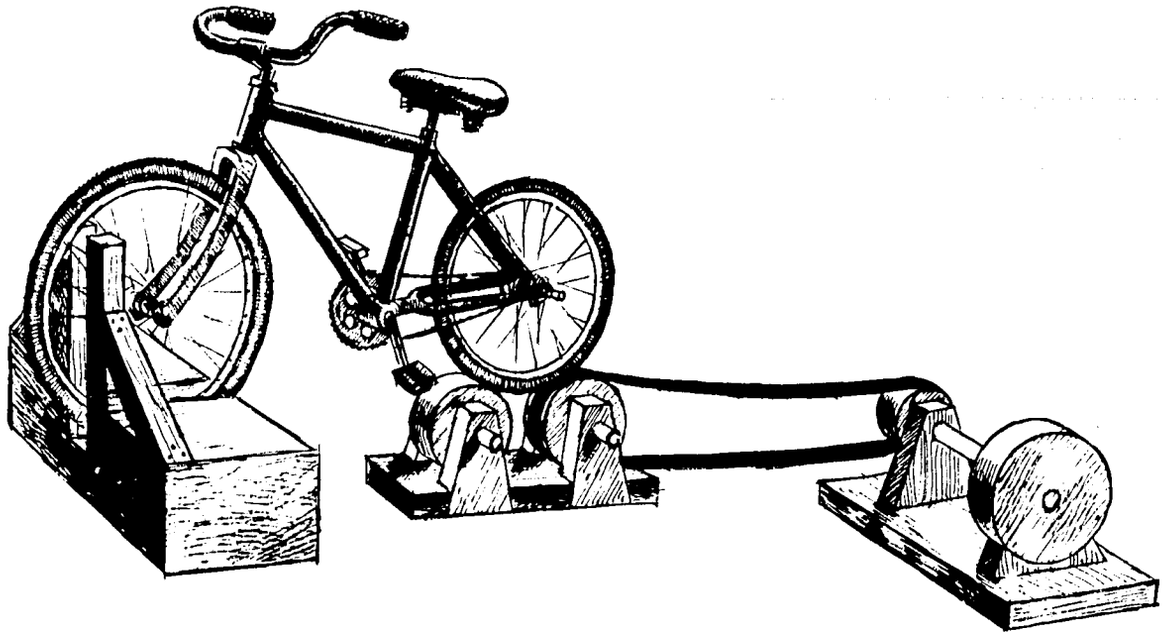

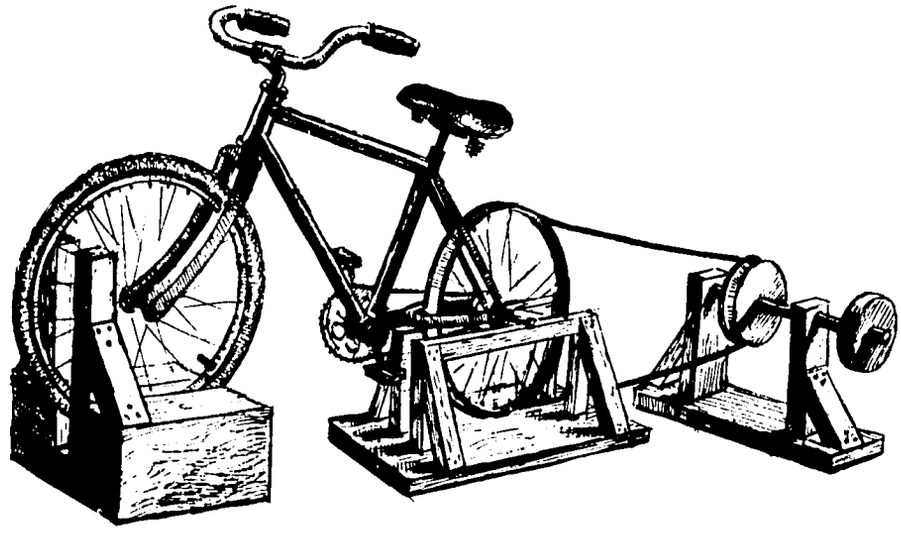

FIGURE 24
USE OF BICYCLE AS MOTION SOURCE. PEDAL BICYCLE TO CAUSE PULLEY TO TURN

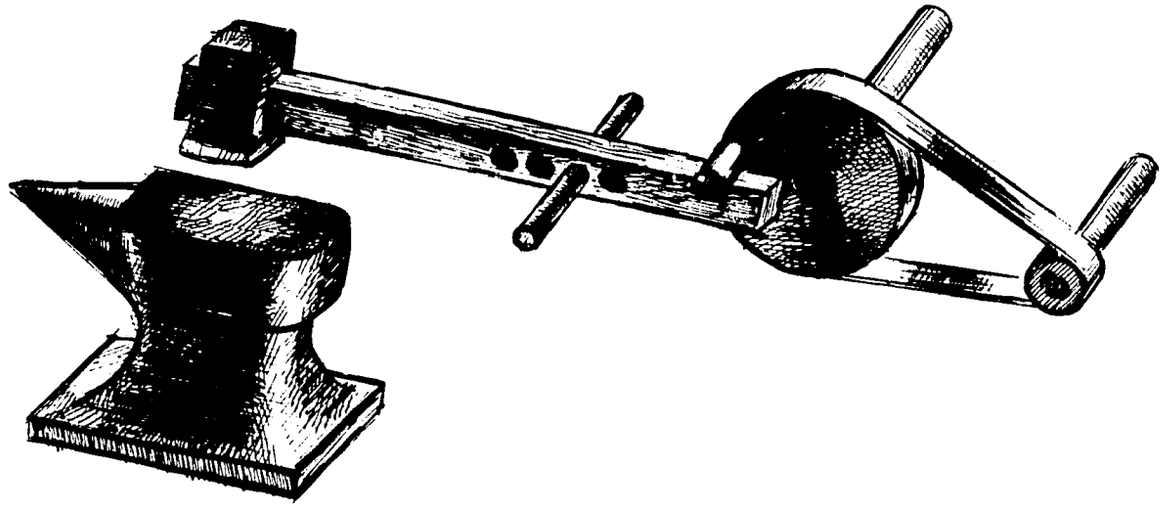

FIGURE 25
HAMMER FOR BLACKSMITH. WHEN PULLEY TURNS, HAMMER HEAD RISES AND DROPS ON ANVIL. CHANGE TO OTHER HOLES IN ARM FOR HIGHER OR LOWER LIFT OF HAMMER HEAD

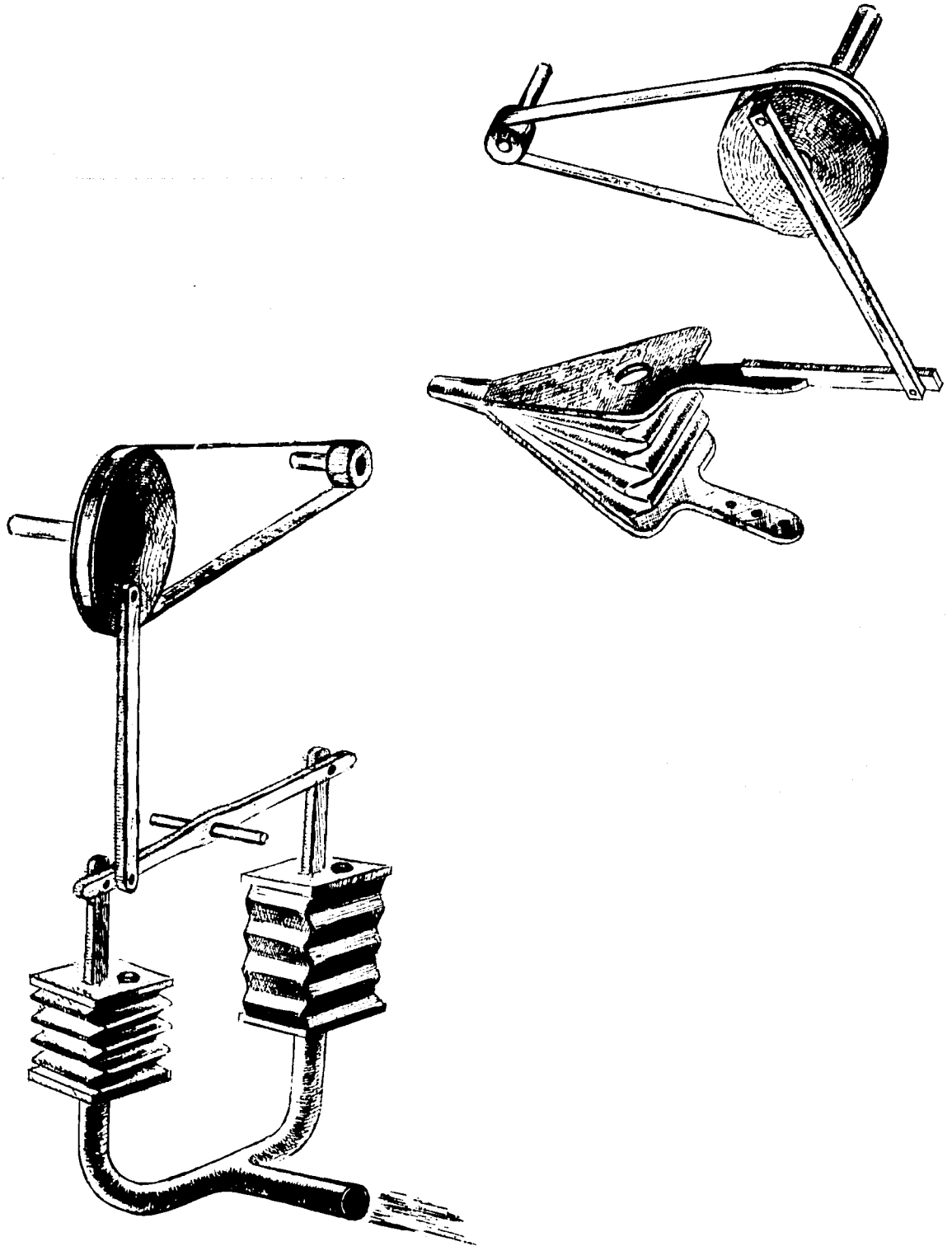

FIGURE 26
BELLOWS FOR BLACKSMITH. WHEN PULLEY TURNS, BELLOWS FORCE AIR OUT NOZZLE

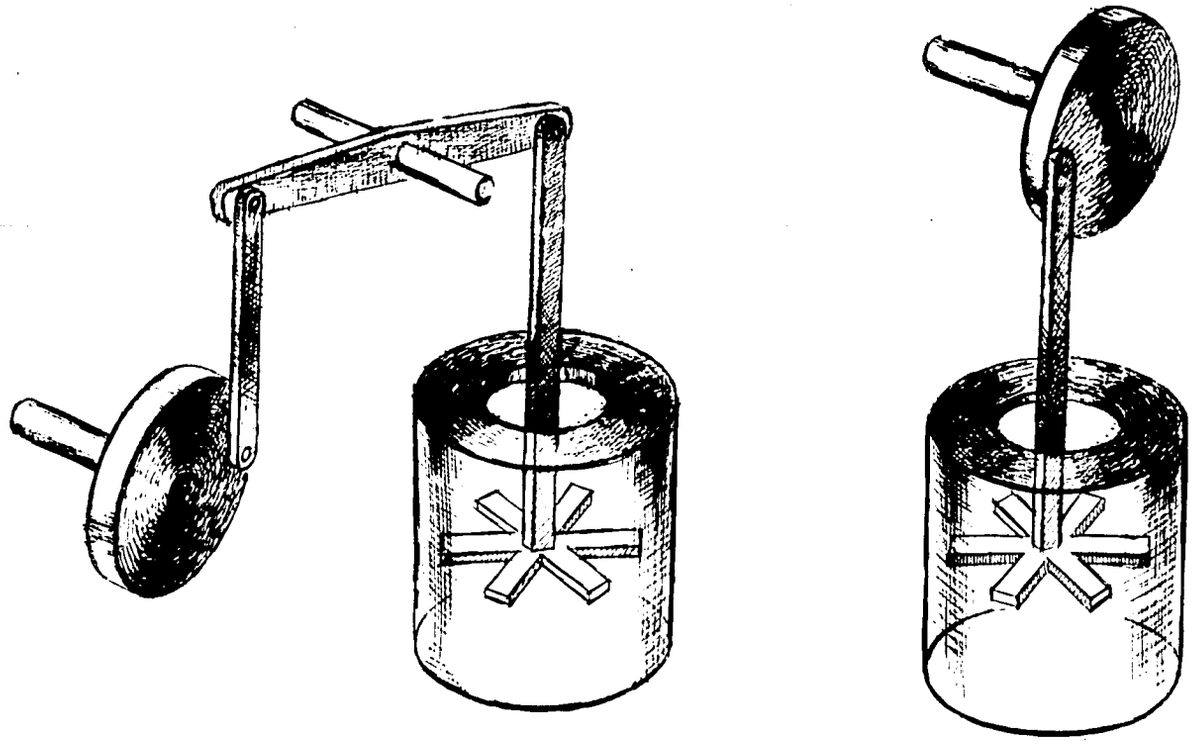

FIGURE 27
CHURN. WHEN PULLEY TURNS, PLUNGER GOES UP AND DOWN

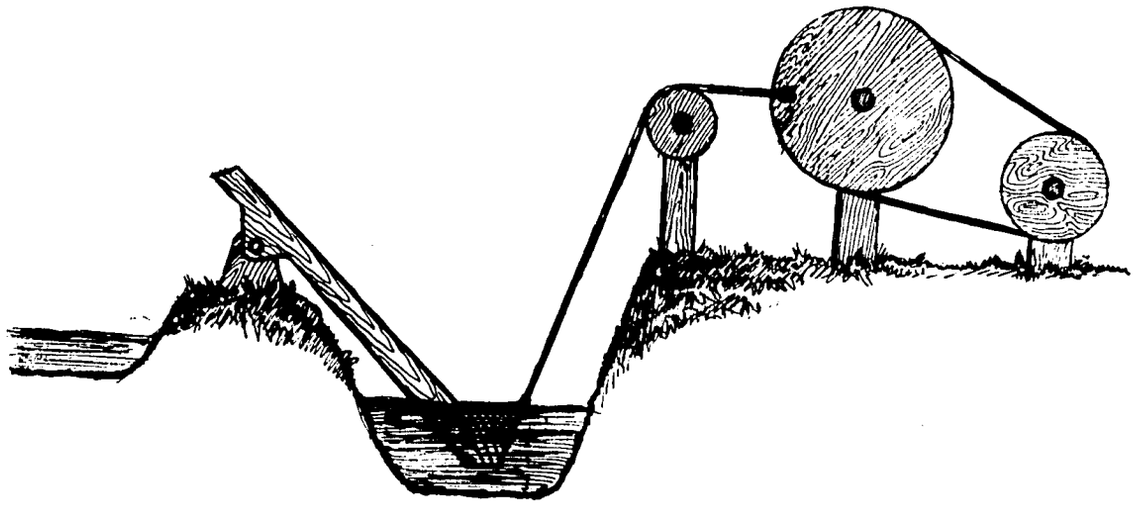

FIGURE 28
WATER LIFT. WHEN PULLEY TURNS, HOLLOW SCOOP FULL OF WATER COMES UP AND WATER POURS OUT OTHER END INTO IRRIGATION DITCH. SCOOP GOES DOWN TO FILL UP AGAIN

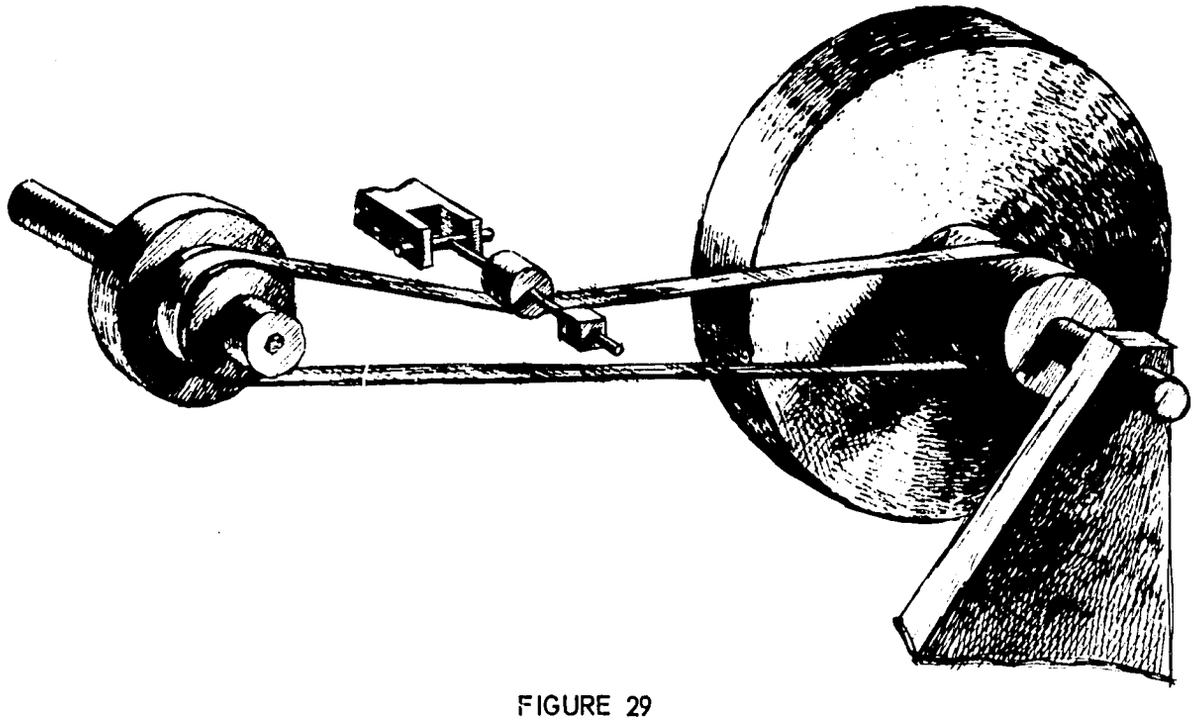

FIGURE 29
GRINDING WHEEL. DIFFERENT SPEEDS OCCUR WHEN BELT IS SHIFTED TO ANOTHER SIZE PULLEY

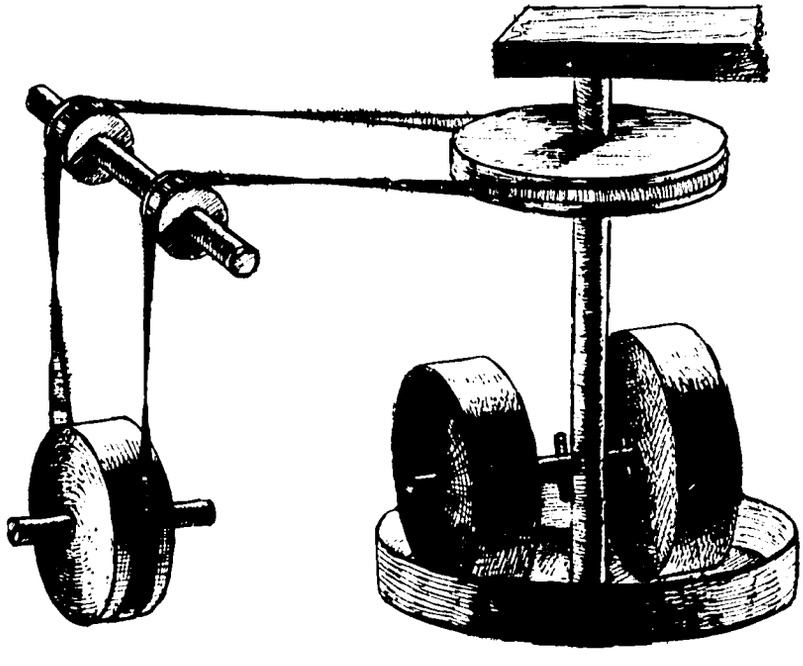

FIGURE 30
PIGMENT GRINDER. WHEN PULLEY TURNS, GRINDING WHEELS ROLL AROUND PAN AND CRUSH MATERIAL IN PAN

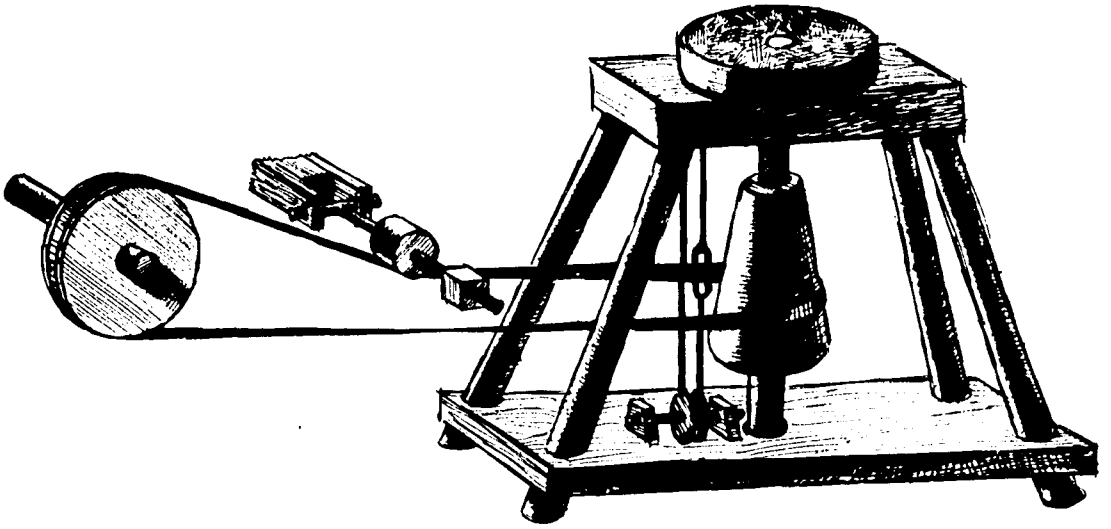

FIGURE 31
POTTER'S WHEEL. WHEN PULLEY TURNS, DIFFERENT SPEEDS ARE OBTAINED BY CAUSING BELT TO RIDE HIGHER OR LOWER ON CONE PULLEY

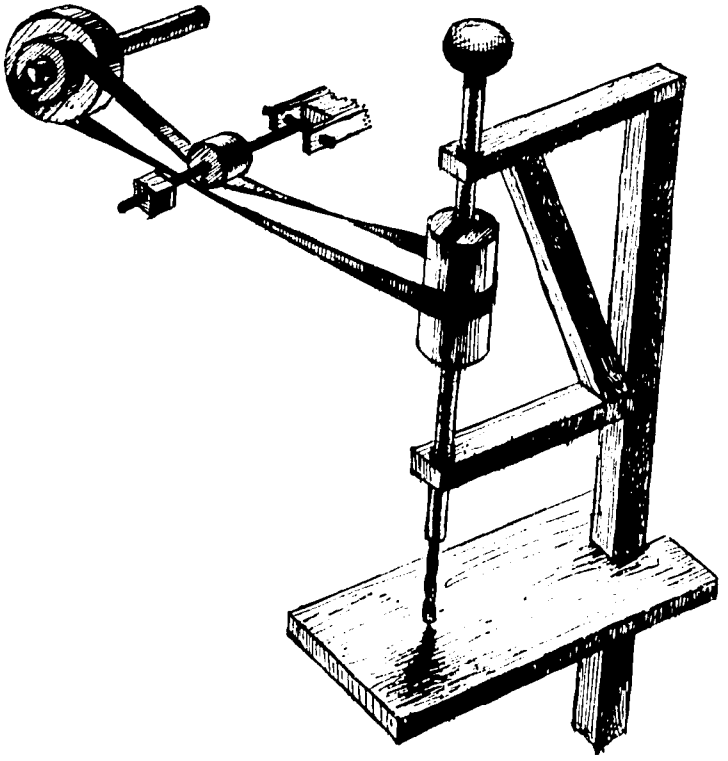

FIGURE 32
DRILL PRESS. DIFFERENT DRILL SPEEDS OCCUR WHEN BELT RUNS ON STEP PULLEY. PRESS DOWN ON TOP OF DRILL TO MAKE HOLE

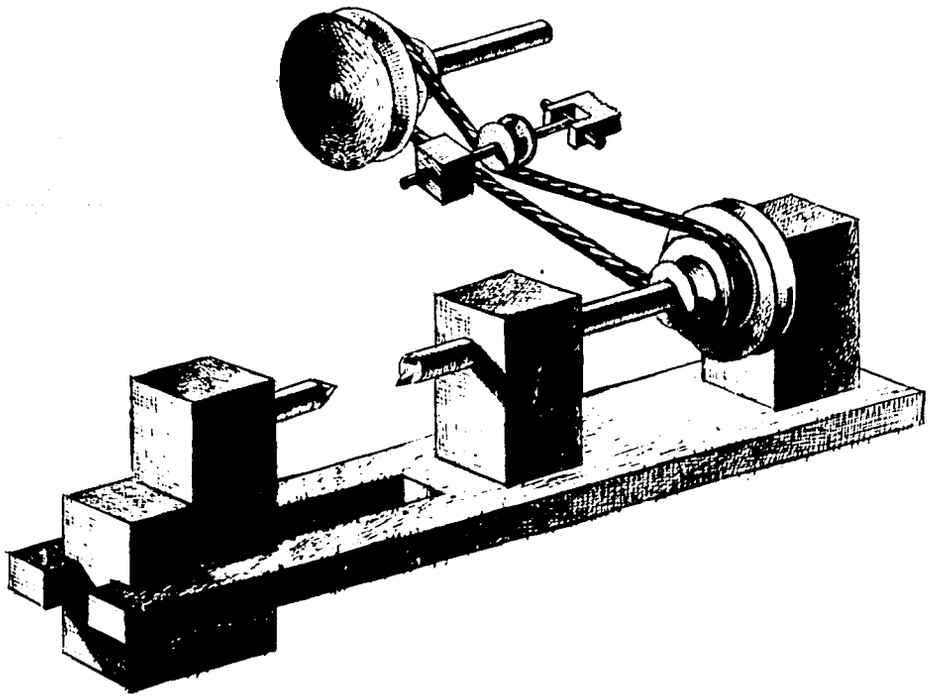

FIGURE 33
LATHE. DIFFERENT LATHE SPEEDS OCCUR WHEN ROPE IS MOVED TO OTHER STEP PULLEYS

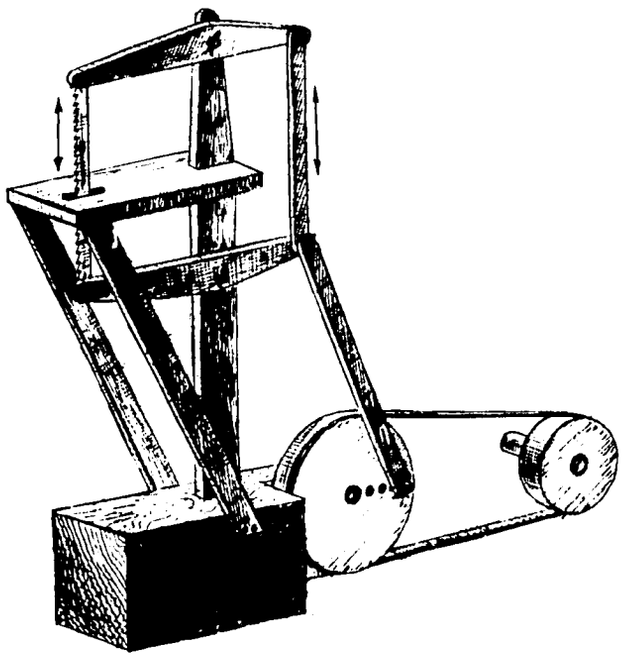

FIGURE 34
JIG SAW. WHEN PULLEY TURNS, SAW MOVES UP AND DOWN. DIFFERENT POWER OF SAW OCCURS WHEN DIFFERENT HOLE IN PULLEY IS USED

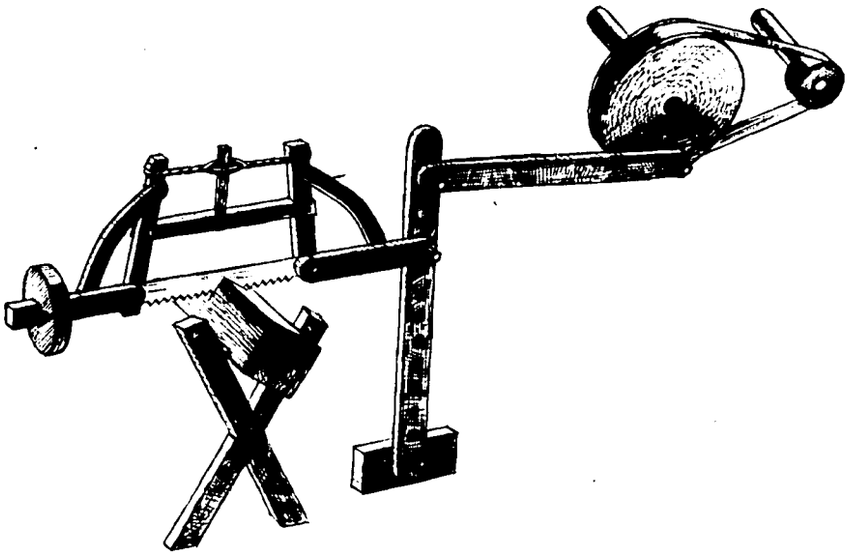

FIGURE 35
HACK SAW. WHEN PULLEY TURNS, SAW MOVES BACK AND FORTH ACROSS LOG. DIFFERENT SAW HEIGHTS AND POWER OCCUR WHEN DIFFERENT HOLES ARE USED

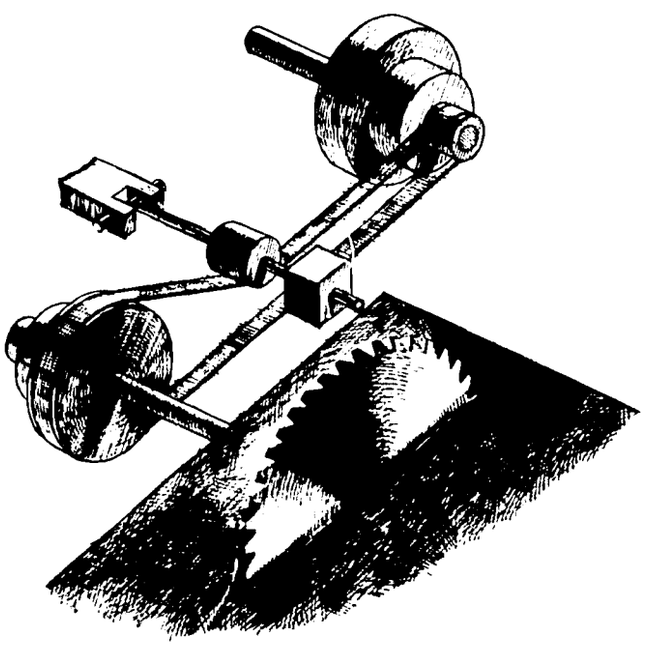

FIGURE 36
TABLE SAW. DIFFERENT SAW SPEEDS OCCUR WHEN BELT IS MOVED TO OTHER STEP PULLEYS

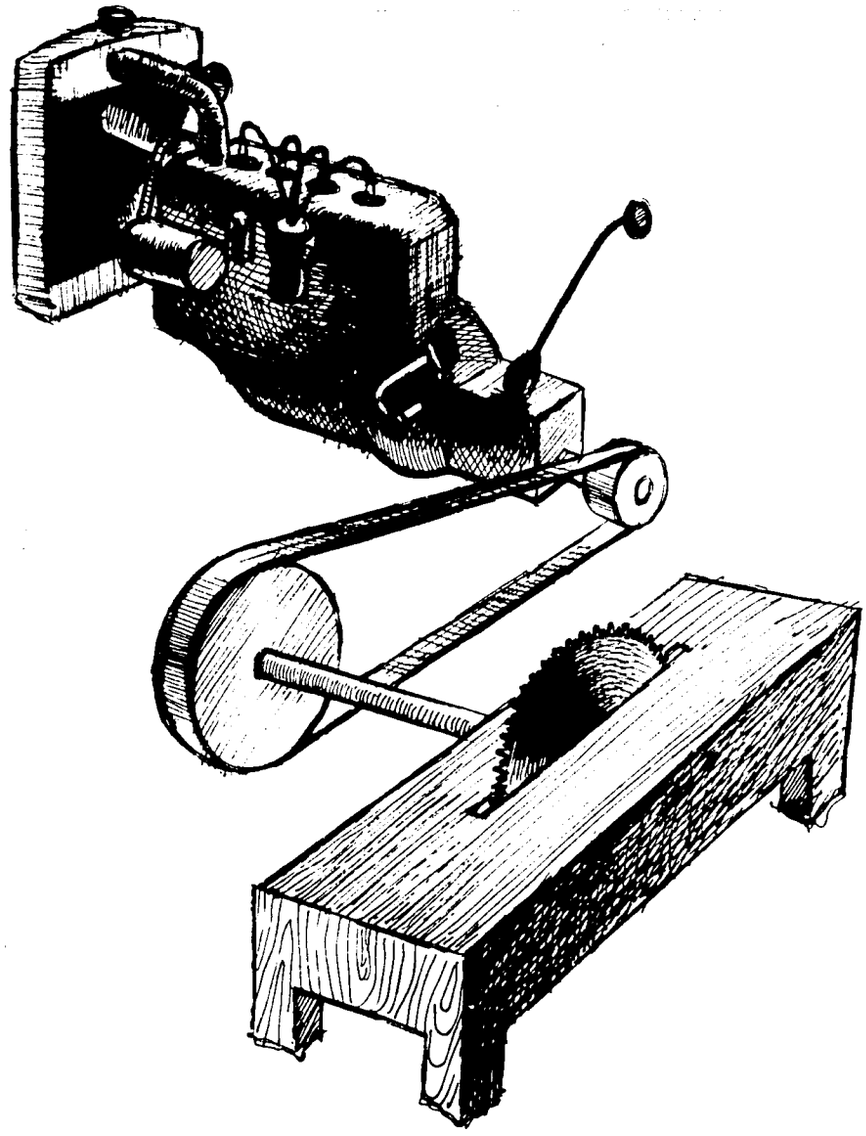

FIGURE 37
SAW MILL. DIFFERENT SAW SPEEDS OCCUR WHEN GEARS IN AUTOMOBILE ENGINE ARE CHANGED

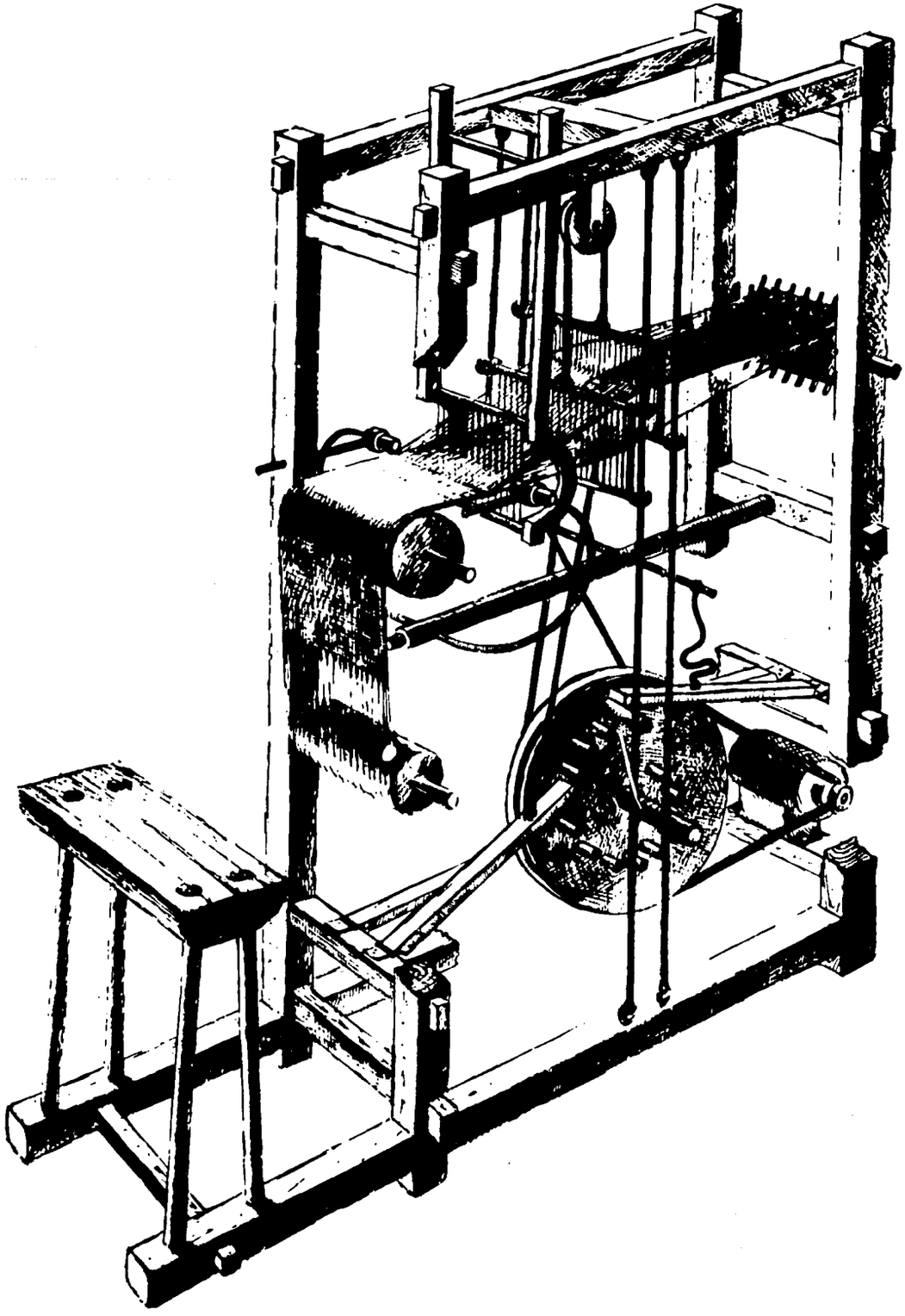

FIGURE 38
SIMPLE LOOM. WHEN MOTOR TURNS LARGE WHEEL, HEDDLES AND FLY-SHUTTLE OPERATE IN SEQUENCE. COMB AND FINISHED CLOTH ARE MOVED BY HAND