AGENCY FOR INTERNATIONAL DEVELOPMENT
WASHINGTON, D. C. 20523

**BIBLIOGRAPHIC INPUT SHEET**

FOR AID USE ONLY
Batch 72

1. SUBJECT CLASSIFICATION

A. PRIMARY: Science and technology — TC00-0000-0000

B. SECONDARY: Applications

2. TITLE AND SUBTITLE

Bamboo as a building material

3. AUTHOR(S)

McClure,F.A.

| 4. DOCUMENT DATE | 5. NUMBER OF PAGES | 6. ARC NUMBER |
|---|---|---|
| 1953 | 55p. | ARC |

7. REFERENCE ORGANIZATION NAME AND ADDRESS

AID/TA/OST

8. SUPPLEMENTARY NOTES *(Sponsoring Organization, Publishers, Availability)*

9. ABSTRACT

10. CONTROL NUMBER

PN-AAE-745

11. PRICE OF DOCUMENT

12. DESCRIPTORS

Bamboo
Construction materials

13. PROJECT NUMBER

14. CONTRACT NUMBER

AID/TA/OST

15. TYPE OF DOCUMENT

AID 590-1 (4-74)

# BAMBOO AS A BUILDING MATERIAL

by
F. A. McClure
formerly
Field Service Consultant
Foreign Agricultural Service
presently
Research Associate in Botany
Smithsonian Institution

Reprinted by the
Department of Housing and Urban Development
Office of International Affairs
with the permission of

Foreign Agricultural Service
United States Department of Agriculture

Washington, D. C. May 1953

Reprinted July, 1963
Reprinted June, 1967
Reprinted June 1972

## FOREWORD

This publication was originally prepared and published at the request of the Department of Housing and Urban Development (HUD) by the U.S. Department of Agriculture under the Point Four Program for the use of those actively engaged or interested in the development or improvement of the use of bamboo. It is not an exhaustive treatment of the subject; but it does present critical features and principles.

J. Robert Dodge, formerly of the HUD staff and Harold R. Hay and Stephen Arneson former HUD staff members supplied information and suggestions that contributed to the development of the subject.

Grateful acknowledgement is made to Graham Quate, former United States Agricultural Attache, Bangkok, Thailand, for permission to reproduce his photographs; and to Carl O. Erlanson, New Crops Research Branch, Crops Research Division, Agricultural Research Service, United States Department of Agriculture, for permission to use a photograph by Howard Dorsett. Edward Beckwith supplied the photograph of the Torodja house in the central Celebes, which is used as the frontispiece; it was originally published in David Fairchild's book, The World Grows Round My Door, and permission to reproduce it was granted by Scribners. H.E. Glenn, Vice-Director, Engineering Experiment Station, Clemson Agricultural College, South Carolina, granted permission to quote extensively from his bulletin, Bamboo Reinforcement of Portland Cement Concrete Structures. Virgil C. Pettit prepared the line drawings that bear his initials.

CONTENTS


| | Page |
|---|---|
| Introduction | 1 |
| Parts of a House for Which Bamboos Are Suitable | 2 |
| Foundation | 3 |
| Frame | 3 |
| Floors | 4 |
| Walls, Partitions, Ceilings | 4 |
| Doors and Windows | 5 |
| Roof | 5 |
| Pipes and Troughs | 6 |
| Bamboo Reinforcement of Concrete | 7 |
| Geographical Distribution of Bamboos | 12 |
| Differences Among Species | 31 |
| Some Bamboos Used in Housing | 32 |
| Shortcomings of Bamboo and How to Overcome Them | 40 |
| Variable Dimensions | 40 |
| Uneven Surfaces | 40 |
| Extreme Fissibility | 40 |
| Low Durability | 40 |
| Preservation | 41 |
| Skill Requirements | 43 |
| Tool Requirements | 44 |
| Differentiation and Evaluation of Species | 46 |
| Collecting Specimens for Identification | 47 |
| Selected References | 50 |

# Introduction

Bamboo is one of the oldest materials used by mankind to increase comfort and well-being. In today's world of plastics and steel, bamboo continues to make its age-old contributions and is even growing in importance. Programs of technical cooperation among nations are giving recognition to the unique qualities of bamboo and are bringing about a broad sharing of the varieties of bamboo and the knowledge pertaining to their use. In six Latin American countries, projects are going forward today to test and select outstanding varieties of bamboo gathered from over the world and to determine their potential place in local economies. These projects, now a part of the Point Four program of technical cooperation, have been under way for a number of years and some of them have developed to a point where bamboo's multiform usefulness has become obvious and challenging.

Bamboo is a versatile plant material, whose potential can be harnessed in the service of the humble as well as the great. In its adaptability to human needs, it has few peers in the plant kingdom. In the Occident as well as the Orient, the peoples in whose environment bamboo is a natural feature have amply demonstrated its claim to a special place in their everyday life.

As technical cooperation continues to single out species with outstanding utility, and to disseminate them more widely, along with the old skills and the new techniques essential to their practical use, the lot of many now underprivileged people will definitely be improved. With a few plants of superior bamboos in the backyard, a family will have at hand the wherewithal to fence the garden, build a pigpen or chicken coop, or add a room to the house. They will also have the means of augmenting their daily income by making baskets or other specialties in spare time for sale or exchange at the market.

If techniques of large-scale, mechanized utilization can be developed—as, for example, in the manufacture of high-quality papers and rayon—new industries and increased national income may be brought to underdeveloped areas. It is with these prospects in view that bamboo is being used as one of the vehicles for implementing the Point Four program.

## Parts of a House for Which Bamboos Are Suitable

Bamboo may be used alone to make all parts of a house except the fireplace and the chimney. Under most conditions, however, bamboo is actually combined with other building materials, such as wood, clay, lime, cement, galvanized iron, and palm leaves, according to their relative suitability, availability, and cost.

The use of bamboo either as a primary, secondary, or occasional source of building material is common only in areas where suitable bamboos grow in sufficient abundance. Importance of bamboo in any given area usually is determined chiefly by the economic level of the common people and by the cost of other, more durable, materials. Structural soundness adequate to the exigencies of local conditions is commonly achieved with bamboo, but a general monotony of design and a mediocre level of execution characterize bamboo houses in many areas. In certain cultural areas, however, and especially at higher economic levels, as among the well-to-do classes of Japan, Java, and Malaysia, bamboo is employed architecturally in ways that are distinctive and basically artistic. Cohen indirectly alludes to this recognition of bamboo's special virtues: "The principal post in a Japanese house characterizes the house with regard to quality and construction. The roof members are trussed to the post, and enable a properly constructed house to stand up to earthquakes and tremors. The writer has seen many houses in which the principal post is of stout bamboo, or in which a stout timber post is given more character by being faced with bamboo."[1/]

It is my expectation that an architect will presently appear who combines a superior knowledge of, and devotion to, the principles of functional design with an awareness of the possibilities of bamboo as a building material of strength and beauty. Being an artist as well as an architect, he will appreciate the aesthetic qualities of bamboo and its versatility as they have been demonstrated in each area where its use has been lifted to a high plane. Given the right inspiration, the opportunity to travel and to study the best examples of the use of bamboo in building construction, and the cooperation of persons who know the bamboos and the techniques of using them, he will be able to synthesize the best features of bamboo with the technical improvements suggested by his Western background in functional design—and so produce for each cultural area a series of designs and plans that will be a credit to the architecture of our age.

Bamboo has several characteristics that make it a suitable and economical building material for house construction, as well as for the scaffolding (fig. 1) that facilitates such construction:

1. The natural units, or culms, as they are called, are of a size and shape that make handling, storing, and processing both convenient and economical.

2. The culms have a characteristic physical structure that gives them a high strength-weight ratio. They are round or nearly so in cross section, and usually hollow, with rigid cross walls strategically placed to prevent collapse on bending. Within the culm walls the strong, hard tissues of high tensile strength are most highly concentrated near the surface. In this position they can function most efficiently, both in giving mechanical strength and in forming a firm, resistant shell.

3. The substance and grain of bamboo culms make them easy to divide by hand into shorter pieces (by sawing or chopping) or into narrow strips (by split-

---

1/ W. E. Cohen. Utilization of Bamboo in Japan, p. 1. Commonwealth of Australia, Scientific and Industrial Research Organization. South Melbourne, Australia. April 1947.

ting). No costly machines, only simple tools, are required.

4. The natural surface of most bamboos is clean, hard, and smooth, with an attractive color when the culms are properly matured and seasoned.

5. Bamboos have little waste, and no bark to remove.

## Foundation

Examples of the use of bamboo posts instead of a conventional foundation for low-cost houses may be seen in both hemispheres (fig. 2). Unless they are treated with some effective fungicidal preservative, however, such posts are not expected to last more than two or three years on the average, or five years at most under unusually favorable conditions. Although no experimental data are available, it seems reasonable to expect that the lasting qualities of bamboo culms set in the ground may ultimately be extended appreiably by applying pentachlorophenol in an appropriate form (see section on preservation). Until reliable and economical treatments have been developed for preserving bamboo that is frequently wetted or is constantly in contact with damp earth, it is considered better to use some material that is more durable than untreated bamboo for foundations—concrete, for example, or stone, brick, or some durable hardwood (fig. 3).

When used as supporting posts in low-cost houses, culms should have a fairly large diameter, thick walls, and nodes (points at which transverse diaphragms occur) close together to give maximum resistance to bending. Where large bamboos are not available, smaller bamboos with suitable structural characteristics may be bound together to make composite pillars.

## Frame

Next to the foundation and the roof covering, the basic frame is the part of a house most often made partly or wholly of materials other than bamboo. In many regions, those who can afford the difference in cost prefer to use some durable hardwood for frames (fig. 4). They do so partly because hardwoods make stiffer joints and more rigid construction than bamboo, partly because a greater prestige is generally attached to hardwoods, and partly because certain hardwoods are naturally much more resistant to rot fungi and wood-eating insects than untreated bamboo.

There are certain circumstances, however, under which the superior resiliency of a bamboo frame confers important advantages over a rigid construction. In regions where sharp earth tremors or quakes occur frequently, a bamboo-framed house may survive and remain serviceable longer than any other type (fig. 5).

In the selection of materials for the several types of structural elements, the characteristics of the bamboo should match the function to be performed. Only whole culms are used for the principal parts of a bamboo frame. The dimensions of the various structural elements, and their spacing, are governed by the nature and importance of the function they perform. Stiffness and ultimate strength are important in elements of the frame. To get relatively uniform diameters, and maximum thickness of wood wall (for stiffness and strength), the upper, highly tapered, relatively thin-walled portion of the culms is removed. These tip cuts may be used in wattle-and-daub partitions, or for roof sheathing, where close spacing may make up for the inferior properties of the individual units.

The individual structural elements that compose the frame of a conventional all-bamboo house correspond closely to those found in an all-timber frame: Corner posts, girders or plates, joists, studs, struts or braces, tie beams, king posts, purlins, ridgepoles, rafters, sheathing, and so forth. The use of bamboo imposes certain limitations, however. Mortice and tenon joints cannot be used in framing bamboo: any cut, such as notch or mortice, drastically reduces the ultimate strength of a bamboo culm. The only exception is the notch or saddlelike cut used at the upper end of posts to cradle more securely the horizontal elements that rest upon them (fig. 6, C and D).

With the exception of those of certain species of Guadua (notably G. angustifolia) and of Chusquea, the culms of most bamboos will not take nails without splitting. For this reason, the impinging elements are

generally lashed to each other at their intersections (figs. 6 and 7). In the Far East the withes used for lashings are commonly split from bamboo, more rarely from rattan. Where the available bamboos yield brittle withes, tough vines or the bark of certain trees and shrubs may be used for lashings. In some areas, soft iron wire, most of it galvanized, is used.

Common sense and the empirical knowledge of bamboo craftsmen in various countries constitute the most highly recommended guidance for the selection and use of available material. However, a resourceful person of practical experience in building may often be able to suggest sound and useful modifications of conventional procedures.

## Floors

Many bamboo houses have no floor other than the surface of the earth on which they are built. This surface should be, and usually is, raised somewhat by filling with earth, to prevent inundation by drainage water; it may be compacted by pounding. If the fill is made with clay, so much the better, for clay affords a relatively stable surface. The surface of a dirt floor may be made more stable by paving it with bamboo boards. The soil should first be graded to provide natural drainage, but not compacted, before the bamboo boards are laid in place. These may then be pounded with a tamper of suitable design, to drive them into close contact with the surface of the soil, which is compacted by the same operation.

In better houses, the floor is raised above the ground. This arrangement is more hygienic, and provides a sheltered space below the floor, which has many potential uses. In some areas this space is devoted to the rearing of various domestic animals; elsewhere it may be used for the storage of tools and farm equipment, or even farm produce. It may provide a welcome sheltered play space for children in inclement weather.

Serviceable and attractive raised floors may be made entirely of bamboo, given suitable species and a sound structural design. The principal features in conventional design are the supporting beams (part of the basic frame) and the floor covering.

Bamboo culms are more resilient than conventional timbers, and the space between supports should be reduced accordingly. Spacing specifications must be worked out locally for the individual species of bamboo and the size of culm used.

The floor covering may be made of small whole culms, strips, or bamboo boards made by opening and flattening out whole culms (figs. 8, 9, and 10). When the floor consists of bamboo boards, it is generally fastened down by the use of thin strips of bamboo secured to the supporting members by thongs, wire lashings, or small nails, according to local preference and the materials available (fig. 6, B).

## Walls, Partitions, Ceilings

The construction of bamboo walls is subject to infinite variation, depending on the strength required (for resistance to natural forces such as hurricanes and earthquakes), the protection desired from rain and ordinary winds, and the need for light and ventilation. Either whole culms or longitudinal halves may be used, and they may be applied in either horizontal or vertical array. They function more effectively, however, when they are vertical, and are more durable; for they dry more quickly after rain. (Fig. 11.)

A form of wall construction widely favored in Latin America is called bajareque (fig. 12)—at least in Ecuador. It is made by nailing or lashing bamboo strips or slender culms, horizontally and at close intervals, to both sides of hardwood or, more rarely, bamboo posts. The space between the strips is filled with mud alone or with mud and stones. During this operation, the bamboo strips are more or less completely covered with mud but in time they become exposed by weathering. This form of construction is relatively massive, though less so than walls made of conventional stone, rammed earth, or adobe bricks.

Another form of wall construction, perhaps more widely used, is known in Peru and Chile as quincha. It is a sprung-strip construction, known as lath-and-plaster, wattle-and-daub, or stud-and-mud (fig. 13). In this form, the flexible strips are woven together to provide a base to receive the plaster, which is applied to one side only or to both sides.

A more attractive but less substantial covering may be made of bamboo boards (fig. 14). If these boards are expanded slightly, i.e., stretched laterally, as they

are attached, they provide a suitable base for plaster or stucco. Sometimes barbed wire is nailed to the surface to provide a better bond for the stucco. When whitened with lime or painted with cement, this exterior is very attractive (fig. 15).

Partitions are commonly of the lightest construction, such as a thin matting supported by a light framework of bamboo poles. In the Philippine Islands, and generally in the Far East, where suitable bamboos are plentiful, the partitions and even the outer walls of houses are commonly covered with matting woven from thin strips split from the culms (figs. 16 and 17). For this purpose, bamboos with thin-walled culms and tough wood, such as many species of the genus Schizostachyum Nafford, are preferred.

The width of the splines, or thin bamboo strips, and the pattern of weave vary locally and according to the desired quality of matting (called sawale in the Philippine Islands). Material for matting is sometimes prepared from the culms of thin-walled bamboos by simply cracking the nodes and opening the culms out flat, in much the same way as boards are made (figs. 8 and 9).

The ceiling may be covered with a closely placed series of small unsplit culms, or by a latticework composed of lathlike strips split from larger culms. Bamboo matting is favored as a ceiling finish in many areas. In some places the ceiling is omitted altogether, permitting the freer circulation of air welcome in hot, humid seasons. This omission has the added advantage of facilitating the dispersal of smoke from the kitchen fire. In the areas where bamboo is used for housing, a chimney would be a curiosity.

## Doors and Windows

For practical reasons, window and outside door openings are generally kept to a minimum. They may be framed with wood or bamboo. The doors themselves may be wood, or they may be woven bamboo matting stretched on a bamboo frame, a panel of bamboo boards set in a hardwood frame, or a sturdy gatelike barrier constructed of bamboo bars. Doors are side-hinged, and fastenings vary from the traditional latchstring to lock-and-chain. Figure 18 shows the rough-and-ready use of an inferior bamboo for the door of a pioneer settler's hut.

If window openings are provided, they may be framed with bamboo or wood. Most windows are left unglazed and unscreened. Closure may be provided in the form of a bamboo or wooden frame covered with bamboo matting or palm-leaf thatch. Windows are usually hinged at the top; when open—as they are during most of the daylight hours—they serve to exclude the sun's direct rays or light rainfall. At dark the house is closed, to keep out the "night air," generally considered unhealthful. Actually, the closing of houses at night is justifiable on other, more realistic, ground: it prevents the entrance of mosquitoes, rats, bats, and other unwelcome visitors. Permanent window bars of bamboo, many of them painted black to simulate iron bars, are frequently used to frustrate would-be trespassers.

## Roof

Because of their high strength-weight ratio, bamboos are used to excellent advantage for structural elements in roof construction (fig. 6, A). In designing the roof, account must be taken of the nature and weight of the roof covering to be used, whether it be grass or palmleaf thatch, halved bamboo culms (fig. 19), bamboo shingles, corrugated sheetmetal, eternite (fig. 6), or tile (fig. 20). The dimensions, orientation, and spacing of the individual structural units that support the roof covering are varied to conform to the requirements of the case.[2]

In the Department of Caldas, Colombia, where bamboo is available in unlimited quantities, a unique type of roof structure has been adopted for the use of bamboo (figs. 21 and 22). It makes what appears to be an extravagant use of material, but the resulting structure is strong, durable, and attractive.

Edward Beckwith's photograph of the Toradja house in central Celebes (see frontispiece) is another striking illustration of the use of bamboo in roof architecture.[3]

---

[2] Gourou, Pierre. Les Paysans du Delta Tonkinois. Publications de l'Ecole Française de l'Extrême-Orient, v. 27. 640 pp. Illus. Paris, 1936.

[3] D. G. Fairchild, The World Grows Round My Door, p. 115. New York, 1947.

## Pipes and Troughs

The culms of certain bamboos, with diaphragms removed, serve admirably for the fabrication of pipes and troughs.

Longitudinal halves of bamboo culms make very satisfactory eave troughs. Where rainfall is light and water must be conserved, they are used to collect rainwater from the roof and send it into a barrel or cistern for storage. Where rainfall is heavy, they are used to carry the water from the roof to a distant point, in order to avoid excessive dampness around the house.

Under certain circumstances wash water from the kitchen may be disposed of through bamboo pipes or troughs. For this purpose a sloping trough is more practical than a pipe since it is more easily prepared and, if clogged, may be cleared with greater facility.

Longitudinal halves of bamboo culms with the diaphragms removed make suitable conduits for bringing water for domestic use from its source to the house by gravity (fig. 19). In Japan, closed-pipe water systems are constructed of bamboo but it is very difficult to make the joints leakproof.

Underground drainage may be effected by means of bamboo pipes of simple construction. The steps in preparing the bamboo for such use are (1) halving the culms, (2) removing the diaphragms from one half to make the lower section of the drain pipe, (3) cutting notches in the edge of the other half to permit the free entrance of water, (4) treating the two halves with preservative (5- to 10-percent pentachlorophenol in light oil), (5) placing them together again in their original relation, and (6) binding them together with wire. Such drains may be extended to any length by placing the smaller tip end of one pipe into the larger basal end of the succeeding one.

To be suited for the uses just described, the bamboo culms should have a diameter large enough to give the required carrying capacity, and the walls should be thick enough to prevent collapse under use.

## Bamboo Reinforcement of Concrete

Published references to the use of bamboo in reinforcing cement concrete structures or parts thereof indicate that the practice has been followed to some extent locally, for some decades at least, in the Far East (China, Japan, and the Philippine Islands). During the 1930's several experiments were carried out in Europe, particularly in Germany and Italy, to test the performance of cement concrete beams reinforced with bamboo.

The most recent, comprehensive, and readily available information on the subject is to be found in the report of a series of experiments carried out by and under the direction of Professor H. E. Glenn. Two important sections of this report are quoted here, in entirety:[4]

[4] H. E. Clenn. Bamboo Reinforcement of Portland Cement Concrete Structures, pp. 123-127. Clemson College Engineering Experiment Station. Bul. 4. Clemson, S. C. May 1950.

### Summary of Conclusions From Results of Tests on Bamboo Reinforced Concrete Beams

Below is given a summary of the conclusions as indicated from the results of tests on the various beams included in this study.

1. Bamboo reinforcement in concrete beams does not prevent the failure of the concrete by cracking at loads materially in excess of those to be expected from an unreinforced member having the same dimensions.
2. Bamboo reinforcement in concrete beams does increase the load capacity of the member at ultimate failure considerably above that to be expected from an unreinforced member having the same dimensions.
3. The load capacity of bamboo reinforced concrete beams increased with increasing percentages of the bamboo reinforcement up to an optimum value.
4. This optimum value occurs when the cross-sectional area of the longitudinal bamboo reinforcement was from three to four percent of the cross-sectional area of the concrete in the member.
5. The load required to cause the failure of concrete beams reinforced with bamboo was from four to five times greater than that required for concrete members having equal dimensions and with no reinforcement.
6. Concrete beams with longitudinal bamboo reinforcement may be designed to carry safely loads from two to three times greater than that expected from concrete members having the same dimensions and no reinforcement.
7. Concrete beams reinforced with unseasoned bamboo show slightly greater load capacities than do equal sections reinforced with seasoned untreated bamboo. This statement was valid so long as the unseasoned bamboo had not dried out and seasoned while encased in the concrete when the load was applied.
8. When unseasoned untreated bamboo was used as the longitudinal reinforcement in concrete members, the dry bamboo swelled due to the

absorption of moisture from the wet concrete, and this swelling action often caused longitudinal cracks in the concrete, thereby lowering the load capacity of the members. These swell cracks were more likely to occur in members where the percentage of bamboo reinforcement was high. This tendency was lessened by the use of high early strength concrete.

9. The load capacities of concrete members reinforced with bamboo vary with the dimensions of the members.

10. The unit stress in the longitudinal bamboo reinforcement in concrete members decreased with increasing percentages of reinforcement.

11. The ultimate tensile strength of the bamboo in bamboo reinforced concrete members was not affected by changes in the cross-sectional area of the members so long as the ratio of breadth to depth was constant but was dependent upon the amount of bamboo used for reinforcement.

12. Members having the optimum percentage of bamboo reinforcement (between three and four percent) are capable of producing tensile stresses in the bamboo of from 8,000 to 10,000 pounds per square inch.

13. In designing concrete members reinforced with bamboo, a safe tensile stress for the bamboo of from 5,000 to 6,000 pounds per square inch may be used.

14. Concrete members reinforced with seasoned bamboo treated with a brush coat of asphalt emulsion developed greater load capacities than did equal sections in which the bamboo reinforcement was seasoned untreated or unseasoned bamboo.

15. When seasoned bamboo treated with a brush coat of asphalt emulsion was used as the longitudinal reinforcement in concrete members, there was some tendency for the concrete to develop swell cracks, especially when the percentage of bamboo reinforcement was high.

16. Care should be exercised when using asphalt emulsion as a waterproofing agent on seasoned bamboo as an excess of the emulsion on the outer perimeter of the culm might act as a lubricant to materially lessen the bond between the concrete and bamboo.

17. Concrete members reinforced with unseasoned sections of bamboo culms, which had been split along their horizontal axes, appeared to develop greater load capacities than did equal sections in which the reinforcement consisted of unseasoned whole culms.

18. Concrete members reinforced with seasoned sections of bamboo culms, which had been split along their horizontal axes and treated with a brush coat of asphalt emulsion, developed considerably higher load capacities than did equal sections in which the reinforcement was split sections of seasoned untreated bamboo.

19. When split sections of seasoned untreated large diameter culms were used as the reinforcement in a concrete beam, longitudinal cracks appeared in the concrete due to the swelling action of the bamboo. This cracking of the concrete was of sufficient intensity as to virtually destroy the load capacities of the members.

20. When unseasoned bamboo was used as the reinforcement in a concrete member, the bamboo seasoned and shrank over a period of time while encased in the concrete. This seasoning action of the bamboo materially lowered the effective bond between the bamboo and concrete with a resultant lessening of the load capacities of the members.

21. Increasing the strength of the concrete increases the load capacities of concrete members reinforced with bamboo.

22. Concrete members reinforced with seasoned bamboo treated with methylolurea did not develop greater load capacities than did equal sections in which the bamboo reinforcement was seasoned culms treated with a brush coat of asphalt emulsion.

23. The load capacities for concrete members reinforced with unseasoned, seasoned or seasoned and treated bamboo culms, were increased by using split bamboo dowels as the diagonal tension reinforcement along the sections of the beams where the vertical shear was high.

24. The load capacities for concrete members reinforced with unseasoned, seasoned or seasoned and treated split sections of bamboo were increased by the use of a combination of split dowels and the bending up of the upper rows of the split bamboo from the bottom of the beam into the top and covering the sections of the beams where the vertical shear was high.

25. Ultimate failure of bamboo reinforced concrete members usually was caused by diagonal tension failures even though diagonal tension reinforcement was provided.

26. A study of the deflection data for all the beam specimens tested indicated:

(a) That the deflections of the beams when tested followed a fairly accurate straight line variation until the appearance of the first crack in the concrete.

(b) Immediately following this first crack, there was a pronounced flattening of the deflection curve (probably due to local bond slippage) followed by another period of fairly accurate straight line variation, but at a lesser slope, until ultimate failure of the member occurred. This flattening of the deflection curve was more pronounced in the members where the amount of longitudinal bamboo reinforcement was small.

(c) In all cases noted, the deflection curve had a lesser slope after the appearance of the first crack in the concrete, even though high percentages of bamboo reinforcement were used.

27. No pronounced variations were observed when the behavior of bamboo reinforced concrete members under flexure and having "tee" sections was compared with that of equal members having rectangular sections.

28. Bamboo reinforced concrete members under flexure and consisting of "tee" sections were no more effective than were equal rectangular sections, provided the breadth of the stem of the "tee" section was equal to that of the rectangular section and the effective depth of both were the same.

## Design and Construction Principles Recommended for Bamboo Reinforced Concrete

1. In important concrete members, the use of whole culms of green, unseasoned, bamboo is not recommended as the reinforcing material. In concrete slabs and secondary members, green, unseasoned, whole culms may be successfully used when the diameters of the culms do not exceed three-fourths of an inch. When possible, the bamboo used as reinforcement in concrete members, subject to flexure, should be cut and allowed to dry and season from three weeks to one month before using.

2. The use of bamboo culms as reinforcement in concrete members subject to flexure cut in the spring or early summer seasons of the year is not recommended. Only those culms which show a pronounced brown

color should be selected for use from a native bamboo grove. This practice will insure that the culms selected are at least three years old.

3. When thoroughly seasoned whole bamboo culms are to be used as the reinforcement in important concrete members subject to flexure, some type of waterproofing is recommended.

4. When seasoned sections of bamboo split from large diameter culms are to be used as the reinforcement in concrete members under flexure, some type of waterproofing is recommended for the bamboo in all important load carrying members. However, for slabs and secondary members and where the concrete sections are of a size as to allow the placement of the bamboo with a clear distance of from $1\frac{1}{2}$ to 2 inches between the individual bamboo splints and between successive layers, the use of unseasoned sections of bamboo is recommended provided high early strength cement is used. In no case should the split bamboo sections have a width in excess of three-fourths of an inch.

5. The use of vertical split sections of bamboo culms is recommended to provide for diagonal tension stresses in members under flexure covering the portions of the member where the vertical shear is high and where it is impractical to bend up the main longitudinal bamboo reinforcement for this purpose. In continuous members and where otherwise practical, the practice of bending up the main longitudinal bamboo reinforcement at points of heavy shear to provide for diagonal tension stresses is recommended. Also, in all cases where it is practical, a combination of the above methods is recommended.

6. Proper spacing of bamboo reinforcement is very important. Tests indicate that when the main longitudinal bamboo reinforcement is spaced too closely, the flexural strength of the member is adversely affected. Also, when the main longitudinal bamboo reinforcement is used in vertical rows and when the top row is near the neutral axis of the member, the area of concrete at this section in horizontal shear may be sufficiently lessened as to cause failure of the member due to horizontal shear. In many of the specimens tested under flexural loads, the cause of failure was attributed to horizontal shear; however, in most instances where failure was from this cause, horizontal cracks existed in the concrete due to the swelling action of the bamboo reinforcement.

7. In placing the bamboo reinforcement, care should be taken to alternate the basal and distal ends of the bamboo culms in all rows. This practice will insure a fairly uniform cross-section of the bamboo reinforcement throughout the length of the member and the resultant wedging effect that will be obtained will materially increase the bond between the concrete and bamboo.

8. The design of structural members of bamboo reinforced concrete for flexural loads will be governed by the amount of deflection that can be allowed for the member. In all concrete members subject to flexural loads, a high degree of deflection is obtained in the member before failure occurs. Due to this high deflection, failure of a bamboo reinforced concrete member usually occurs due to other causes considerably before the bamboo reinforcement reaches its ultimate tensile strength. Design values, not in excess of from 3000 to 4000 pounds per square inch for the allowable tensile stress of the bamboo reinforcement, must usually be used if the deflection of the member is to be kept under 1/360 of the span length. When this low design value is used for a bamboo reinforced concrete member under flexural loads, a high factor of safety against ultimate failure of the member usually results.

9. The same procedure as that used for the design of structural con-

crete members reinforced with conventional steel is recommended for the design of concrete members reinforced with bamboo. Values have been recommended for the allowable unit bond stress between concrete and bamboo, for the allowable unit tensile stress in the longitudinal bamboo reinforcement and for the modulus of elasticity for bamboo. These recommended values should be used in designing a concrete member reinforced with bamboo for flexural loading. It is also recommended that "tee" beams be designed as rectangular beams ignoring the flange width in the calculations.

10. Some of the important characteristics of concrete members reinforced with bamboo on which future research should be done include:

(a) Use of those species of bamboo in which the modulus of elasticity is higher than that of the species used in these experiments.

(b) More exact data on diagonal tension reinforcement.

(c) Further tests of the use of green uncured bamboo culms as the reinforcement where the conditions are such that the bamboo will be completely seasoned while encased in concrete.

(d) More exact data on the bond between concrete and bamboo.

(e) The use of other waterproofing agents than those used in these tests to insure against the swelling action of seasoned bamboo when placed in wet concrete.

It is obvious, from this very comprehensive and carefully considered series of statements, that the reinforcement of cement concrete with bamboo cannot be undertaken with confidence until a great many factors have been considered. Careful and expert attention to many details in execution is essential to success. Severe limitations must be taken into consideration. Apparently, the bamboo reinforcement of non-load-bearing members, such as wall panels and floors resting on well-compacted earth, has more to recommend it, from the practical point of view, than the bamboo reinforcement of load-bearing members of a structure.

The lay reader will find an admirable summary on use of bamboo for reinforcing concrete in the appendix of an article by V. D. Limaye on the strength of bamboo (see bibliography).

## Geographical Distribution of Bamboos

Bamboos occur as more or less prominent elements in the natural vegetation of many parts of the tropical, subtropical, and mild temperate regions of the world, from sea level to altitudes of more than 13,000 feet, wherever a suitable combination of ecological factors prevails. Their natural distribution is very uneven, both as to abundance and variety of kinds in a given area. Through the agency of man, the distribution of many species of bamboo has been greatly widened. This process probably has been going on for a long time, and the actual extent of it may not been surveyed. However, some of the most valuable species have not been distributed to any important extent and much remains to be done to make these more generally known and available.

The greatest concentration of bamboos and the highest development of their use are to be found on the southeastern borders of Asia and on adjacent islands. This area extends from India to China on the mainland, and from Japan to Java among the islands. Some 20-odd species of bamboo have been reported from the little-known flora of Africa, and many of these are used by the native peoples for house construction. The Island of Madagascar, whose flora is more fully known, has been found to have more native species of bamboo than are known to occur in the whole of Africa. Australia has perhaps a half-dozen native species; Europe none. In the Western Hemisphere, the natural distribution of bamboos extends from southern United States to Argentina and Chile. Some 200 species are native to this area, but they are very unevenly distributed. Many of the recorded species are very imperfectly known, and some kinds have been recorded under more than one name, but the known bamboo flora of the world probably totals more than 700 species, classified in about 50 distinct genera.

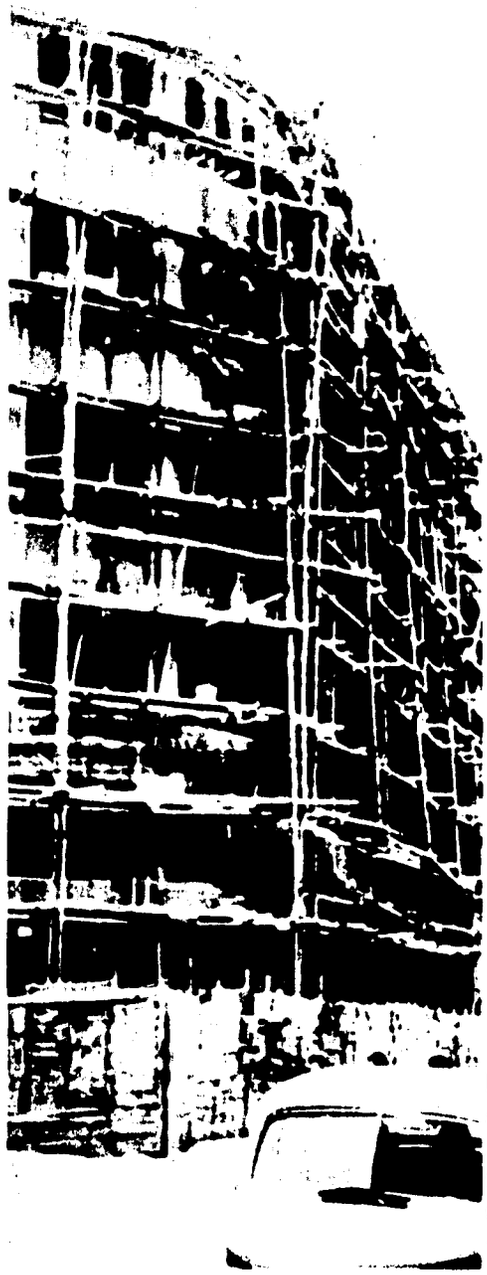

Figure 2.--From supporting posts to rafters and sheathing, this cottage in the Ecuadoran lowlands is made entirely of native bamboo, Guadua angustifolia. The posts may serve for five years; the siding may remain in serviceable condition for decades.

Figure 1.-- Bamboo scaffolding is used in constructing an apartment house in Cali, Colombia. In strength and durability bamboo is well-suited for the purpose; for economy it is probably unequaled.

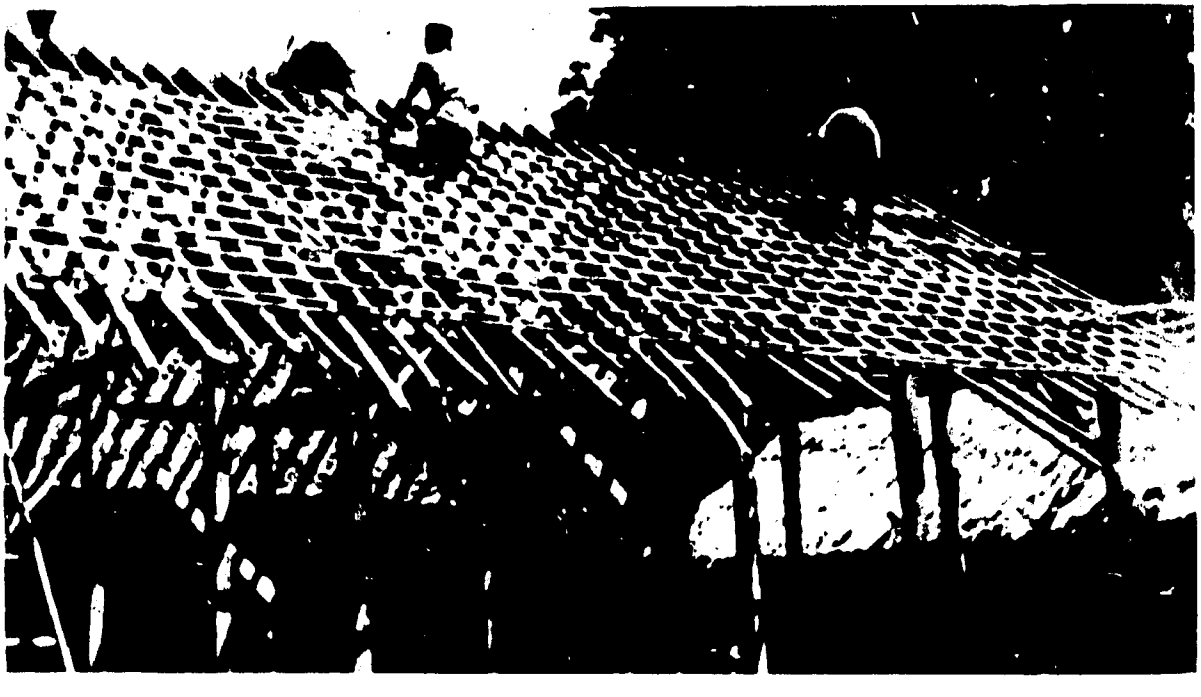

Figure 4.-- Framework of this house under construction in Java is hardwood; but rafters, sheathing, scaffolding, and even the ladder are bamboo. Walls and partitions may be covered with bamboo matting, probably made from species of Gigantochloa, commonly used in Java for this purpose. (Photo by Dorsett.)

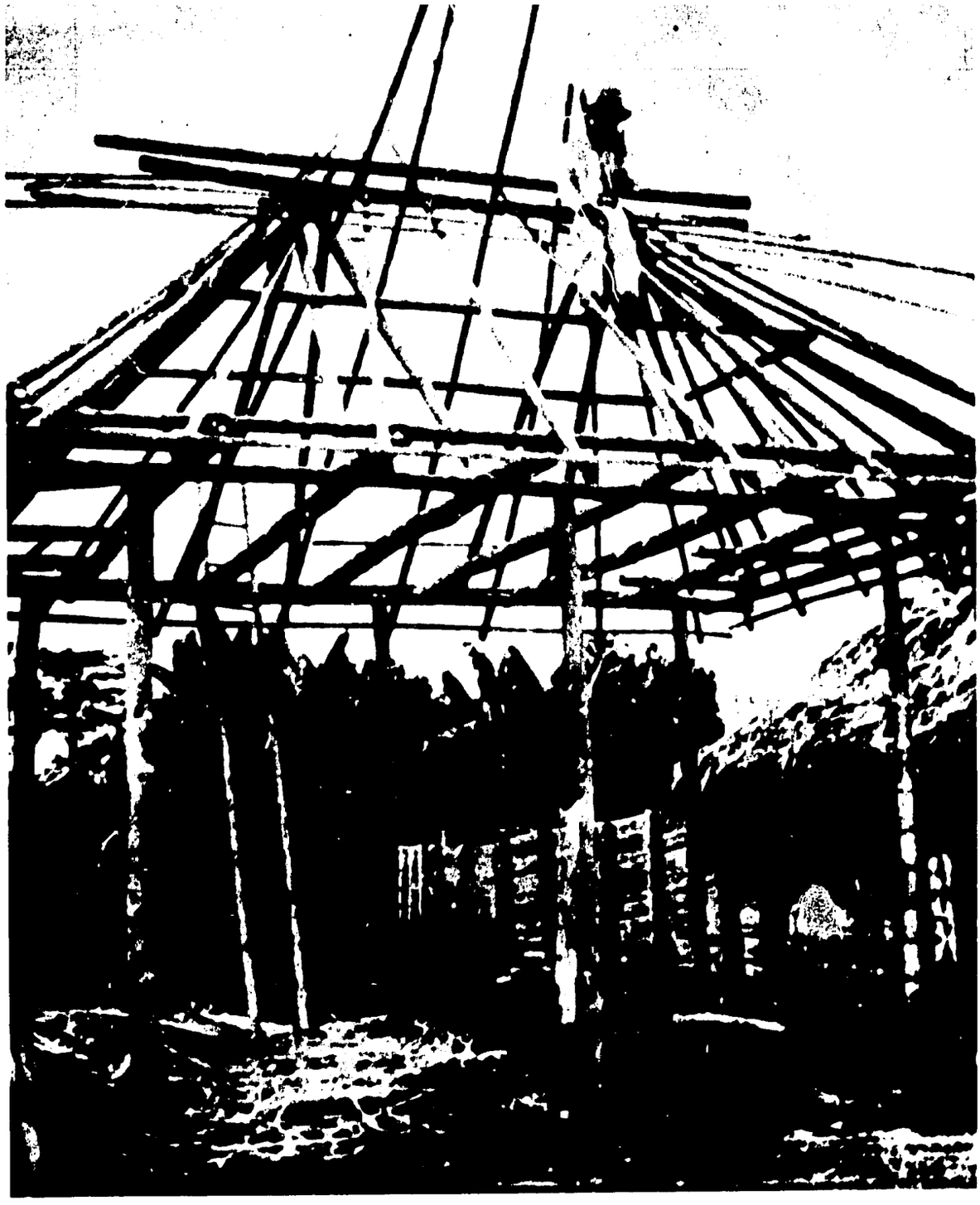

Figure 5.--Bamboo is used for the frame structure of a peasant's cottage in Colombia. Walls and partitions will be made of bamboo boards. In fact, all materials but the roof thatch will come from the native Guadua angustifolia, which produces culms in sizes and form so suited to direct use that only the simplest of tools are required.

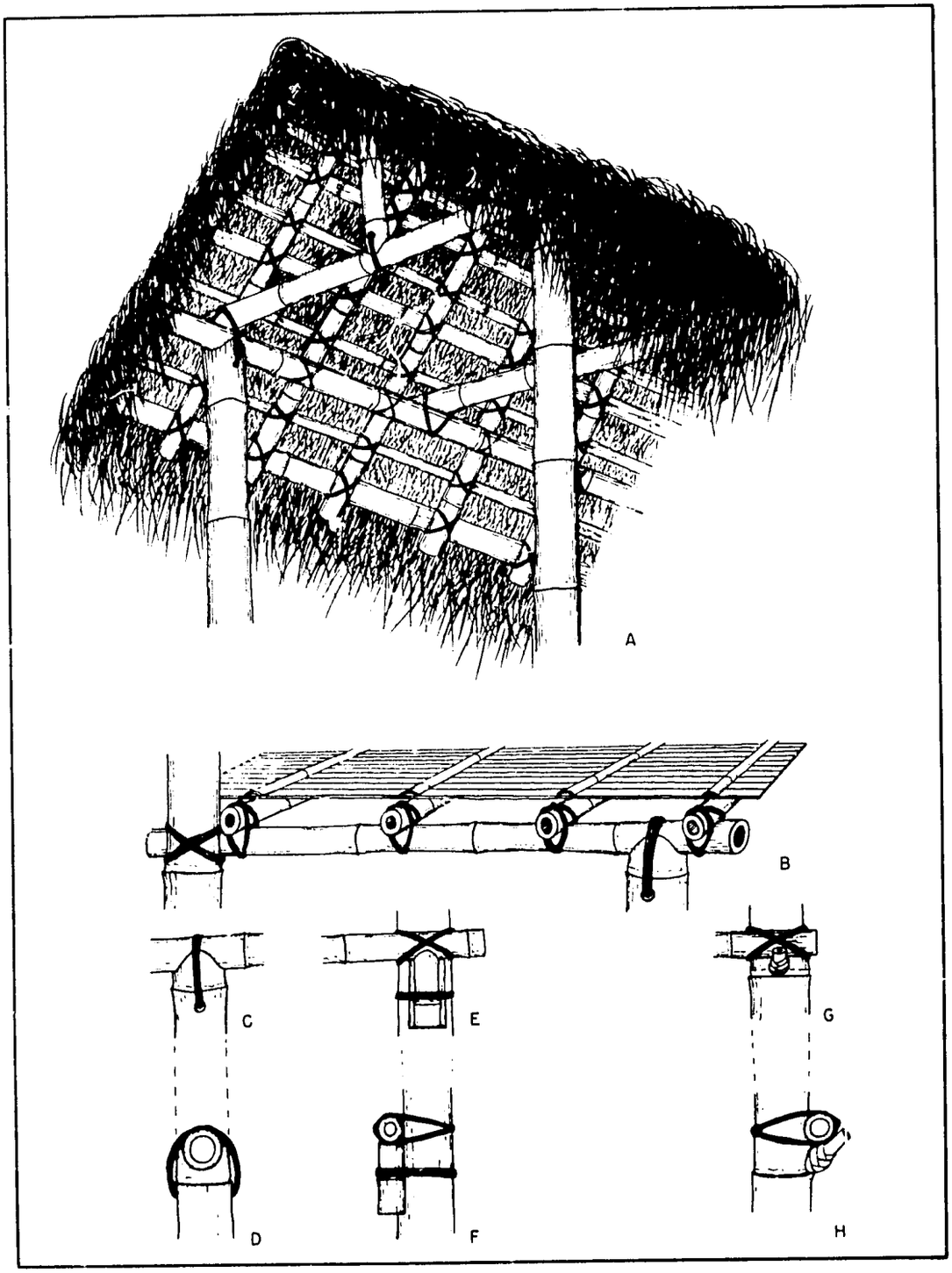


Figure 6.--Details of bamboo construction: A, fitting and binding culms at joints in roof and frame; B, fitting and securing bamboo boards of floor; C and D, saddle joint; E and F, use of inset block to support horizontal load-bearing elements; G and H, use of stump of branch at node of post to support horizontal load-bearing elements.

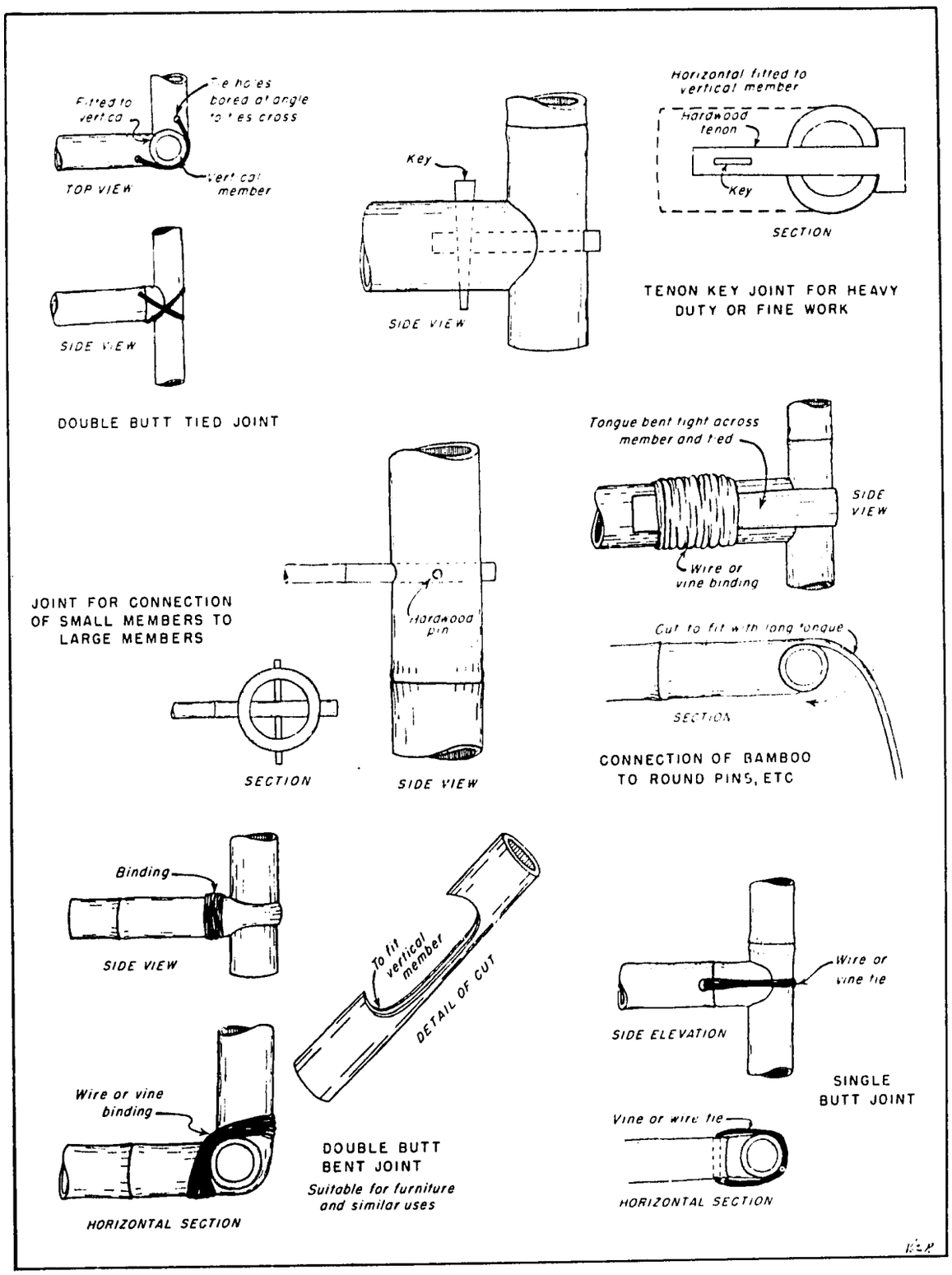


Figure 7.--Joints used in building with bamboo.

Figure 8.--An ax with a well-greased bit is used in Ecuador for making bamboo boards. Each node is split in several places; then with one long split, the culm is spread wide open. Not used for boards is the thick-walled basal part of the culm.

Figure 9.--Final step in making a bamboo board--removing diaphragm fragments from the newly opened culm. It may be done with a machete, as here, or with an adze or a long-handled, shovellike curved spud.

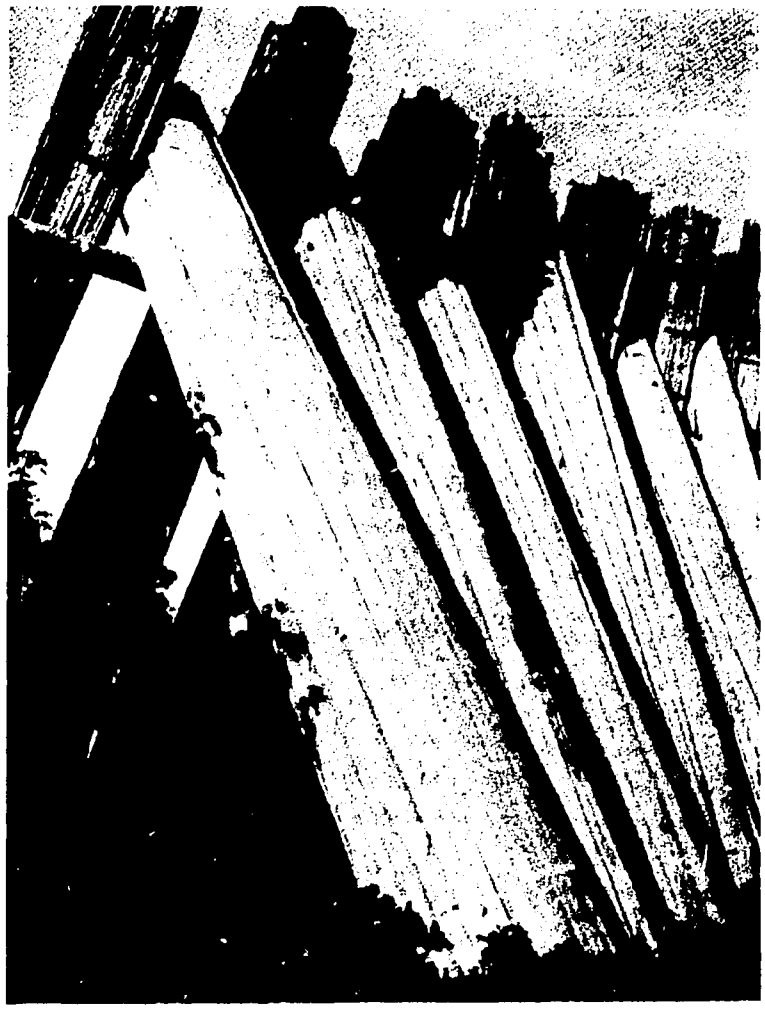

Figure 10.--Bamboo boards stand ready for use. The making of these boards is a well-developed trade in both Ecuador and Colombia; and the finished product might well become an export item.

Figure 11.--Walls paneled in native bamboo in horizontal array are an attractive feature of this artistically designed but rather costly weekend cottage in Guayaquil, Ecuador. The roof covering is eternite.

Figure 12.--Wide bamboo strips support and protect an adobe wall in El Salvador, forming a type of construction called bajareque in many Latin American countries. In El Salvador the common bamboo, Bambusa vulgaris, is available everywhere except in the driest areas, and its culms are standard material for many purposes.

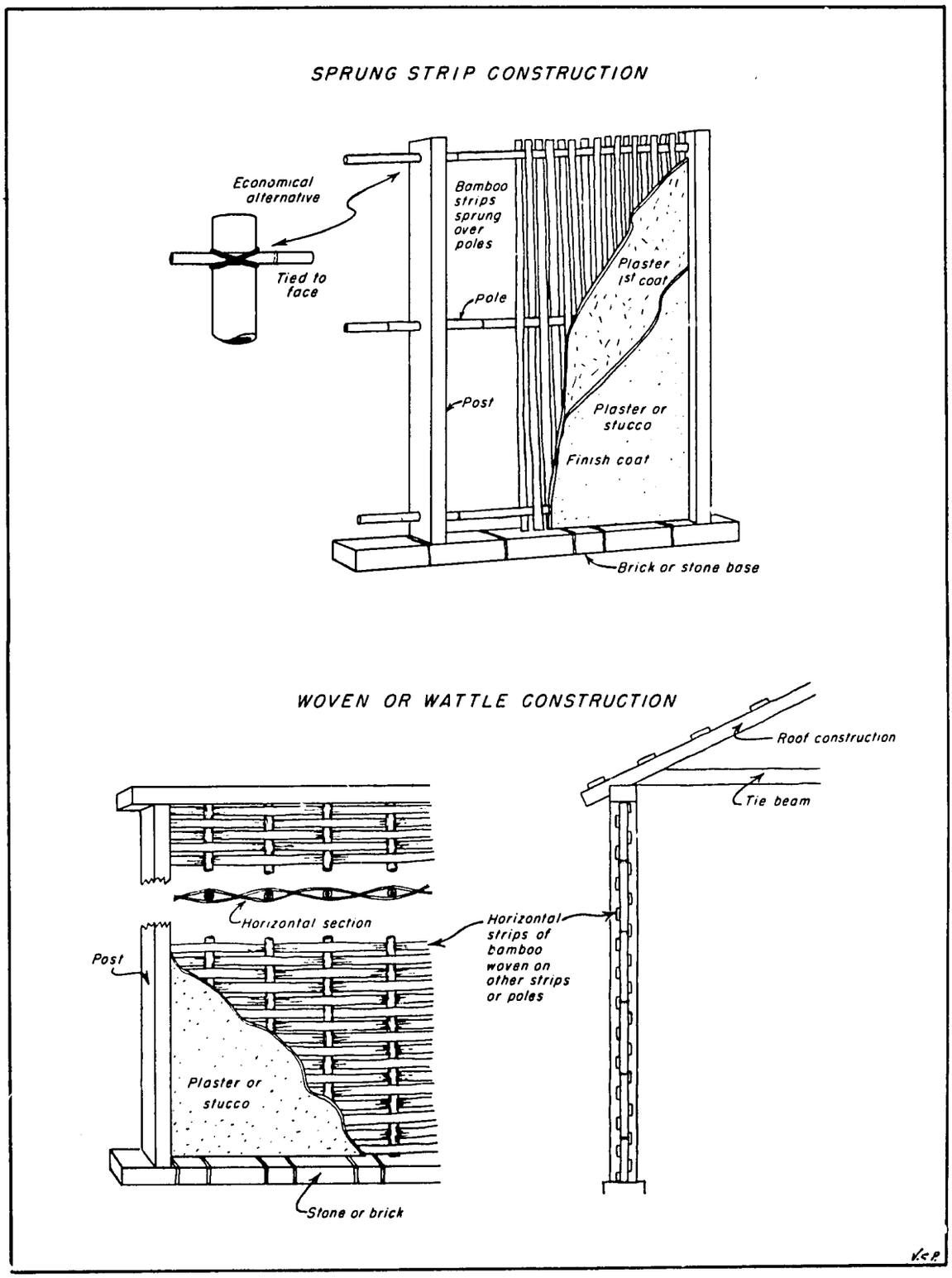


Figure 13.-- Types of wall construction used with bamboo.

Figure 14.--Bamboo house, buoyed up by balsa logs, lies anchored in an Ecuadoran river. The walls are made of bamboo boards, and the leaf-thatched roof is held in place by bamboo riders resting across the comb.

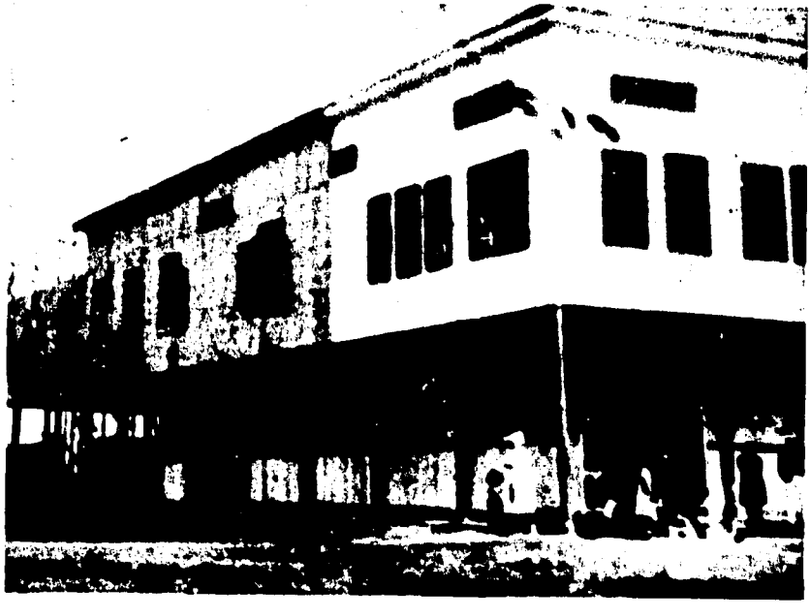

Figure 15.--Bamboo boards provide a sturdy and economical base for the cement stucco that covers the outer walls of this hospital at Manta, Ecuador.

Figure 16.--Hinged panels of matting woven from thin strips of bamboo help to adapt houses to the heat and rains of the Tropics.

Figure 17.--A young Thai plays his bamboo organ against a background of bamboo matting. Such matting is a popular wall covering throughout southeastern Asia: it is light in both color and weight, does not stain, and is easily cleaned. (Photo by Quate.)

Figure 18.--A pioneer settler in eastern Peru has made his cabin door with material that came easily to hand--culms of a wild bamboo, Guadua sp.

Figure 19.--Roof tiles of this laundry in Colombia, as well as the troughs of its water system, are halved culms of Guadua angustifolia, the common native bamboo of Colombia and Ecuador.

Figure 20.--Tile covers the roof of this bamboo house in Guatemala. The ''boards'' of the wall are made from culms of Bambusa vulgaris.

Figure 21.--Bamboo is standard material for roof timber in the rural houses of Calda. Department, Colombia. It combines lightness strength, and durability and, being locally abundant, costs but little.

Figure 22.--The structure of this bamboo roof is typical in Caldas Department, Colombia. The uniformity has grown out of long years of use: ever since colonial times, bamboo has been the preferred building material in the area.

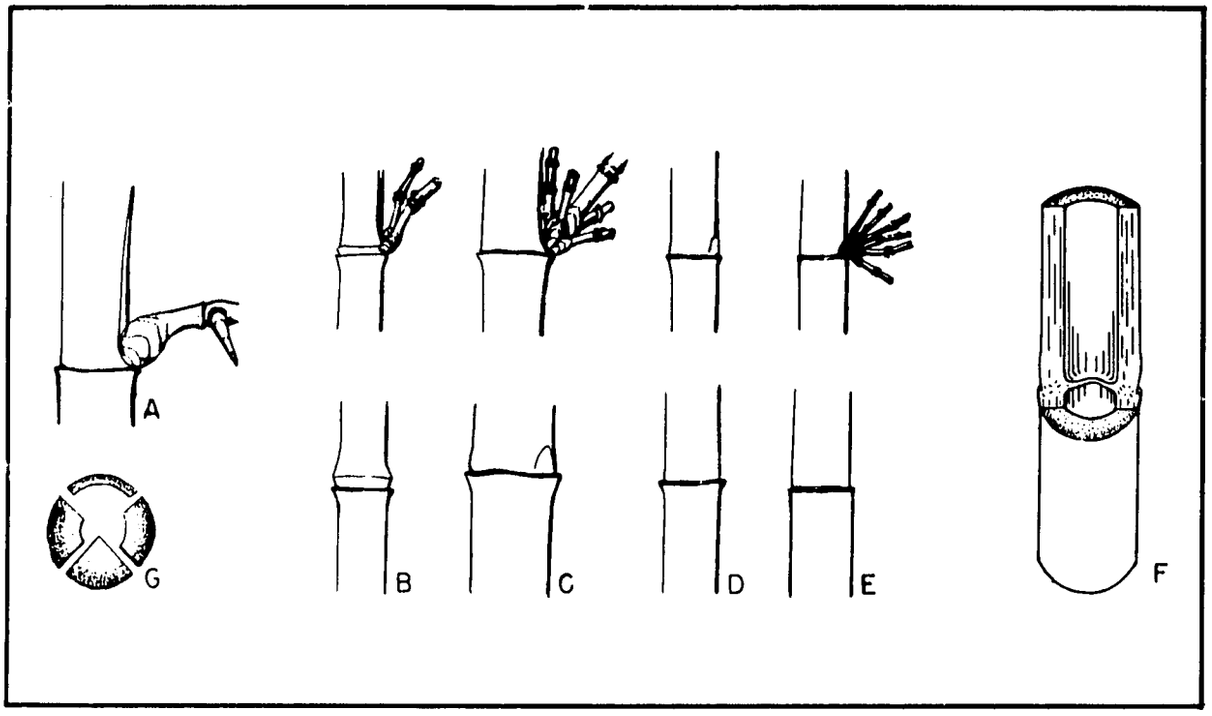


Figure 23.--Some contrasts among different bamboos, as seen in the nodes, internodes, and branches of the culms: A, Bambusa arundinacea, a thick-walled bamboo with inflated nodes and heavy, solitary, thorny lower branches. B, Phyllostachys bambusoides, a moderately thin-walled bamboo, with inflated nodes and paired branches, above the insertion of which the internode is flattened and shallowly grooved. C. Bambusa vulgaris, a moderately thick-walled bamboo, with inflated nodes, dormant branch buds below, and prominent branch complements above. D, Bambusa textilis, a thin-walled bamboo with cylindrical internodes; noninflated nodes flared at the sheath scar; branch buds lacking at the lower nodes and tardily developed above. E. Schizostachyum lumampao, a thin-walled bamboo with cylindrical internodes; uninflated nodes; no buds at lower nodes; slender, subequal, easily removed branches above. F, combined longitudinal and cross sections of the culm of Bambusa tulda, showing the nature of the diaphragm; in all bamboos the diaphragm forms a transverse strengthening structure at each node. G, quarter cross sections of culms of four different bamboos, representing the extreme range in wall thickness.

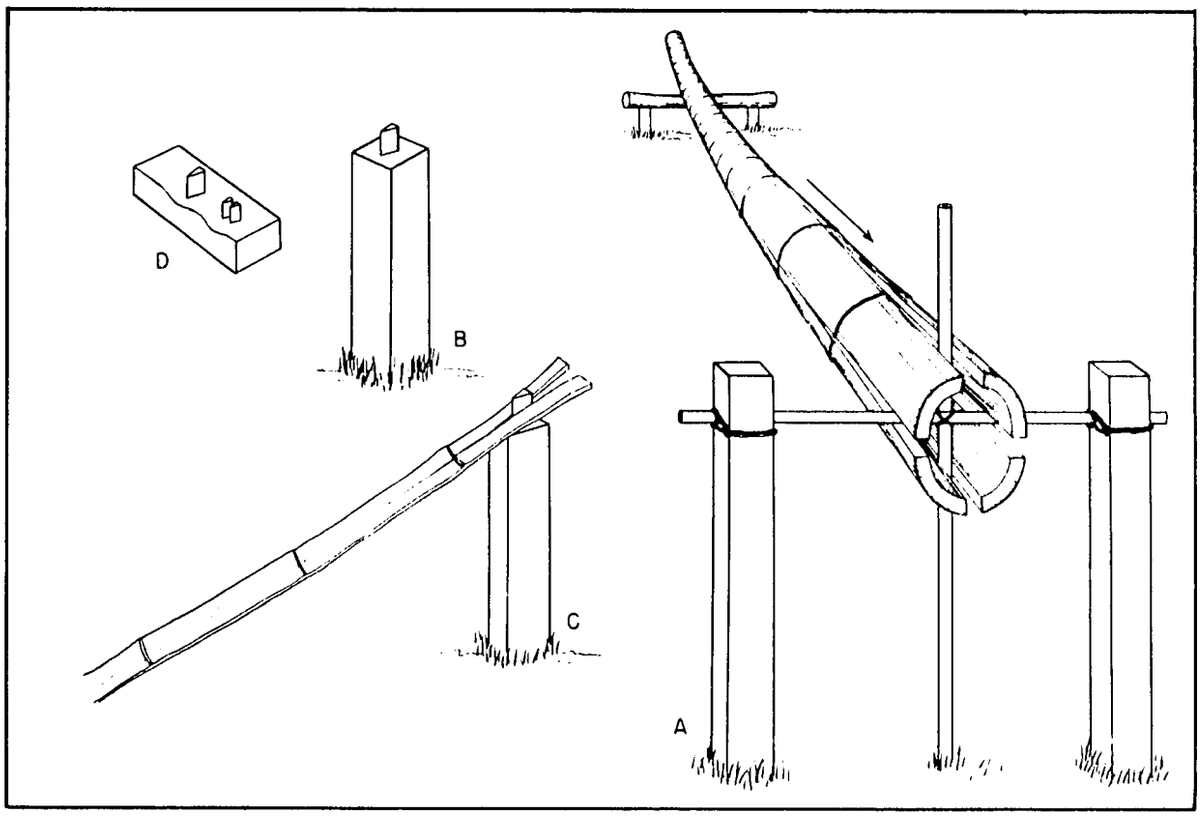


Figure 24.--Devices for splitting heavy culms. A, cross of iron or hardwood bars (about 1 inch thick) supported by posts (about 4 inches thick and 3 feet high) firmly set in the ground; with an ax, two pairs of splits are opened at right angles to each other at the top end of the culm; these are held open with wedges until the culm is placed in position on the cross; the culm is then pushed and pulled, by hand, in the direction indicated by the arrow (adapted from Salcedo). B and C, steel wedge for splitting quartered culms. D, block with single and paired steel wedges for mounting on a heavy bench; adjacent faces of the paired wedges should be slightly closer together at the cutting edge than at the back.

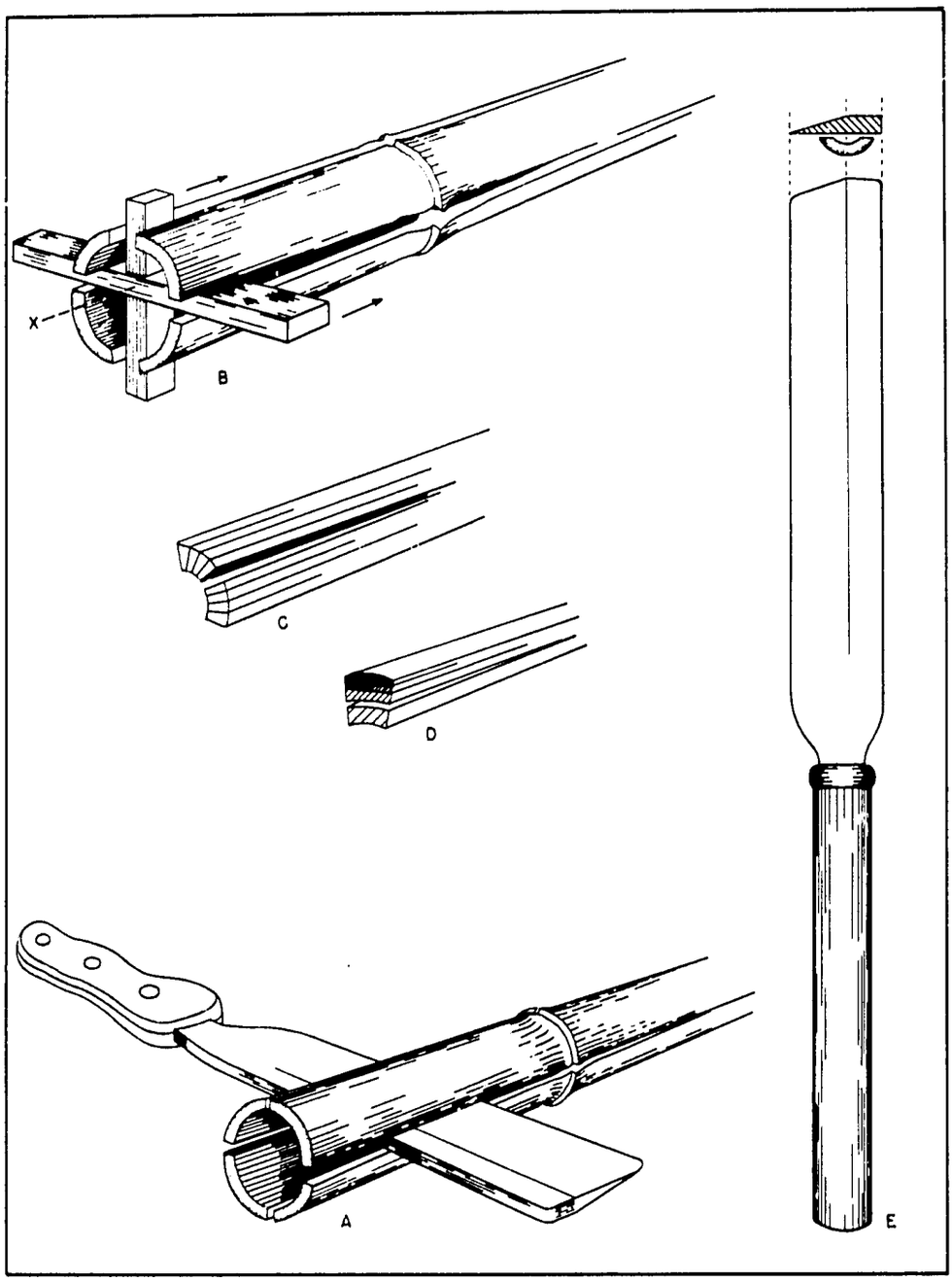


Figure 25.--Splitting of moderate-size culms to make withes for weaving and lashing. Quartering a culm; A, starting four breaches at upper end; B, driving a hardwood cross along the breaches to complete the splitting. C, dividing quarters radially, making center splits first. D, splitting radial divisions tangentially; the hard outer (convex) strip is best, and the soft, pithy inner (concave) strip is usually discarded. E, long-handled knife used for C and D; some workers hold a strip of bamboo on the blade to add to its effective thickness when they wish to speed up the work.

## Differences Among Species

As with steel, bricks, cement, stone, clay, timberwoods, or any other building material, it is necessary to think of the bamboos in terms of individual and distinct kinds, each characterized by a combination of properties peculiar to itself (fig. 23). Certain combinations of these properties are useful for identification; certain ones must be taken into account in evaluating the suitability of individual kinds for one purpose or another. Here are some of the properties that determine the best use of a given bamboo and the relative value of available kinds for a given purpose:

1. Average dimensions of culms
2. Taper of culms
3. Straightness of culms
4. Size and distribution of branches
5. Length of culm internodes
6. Shape and proportions of internodes
7. Thickness of the wood (culm wall)
8. Relative proportions and distribution of different tissues (bundles and parenchyma) in the wood (which affect the properties listed under 9 and 10)
9. Density and strength of the wood
10. Splitting qualities of the wood
11. Susceptibility to fungi and wood-eating insects.

Specifications for bamboos are not yet standarized on a wide geographical scale. Within any bamboo-using community, however, the close observer will find that where there is a choice of several species, certain ones will be used for certain purposes with great regularity. And where there are established bamboo markets, many of the bamboos offered are found to be classified into more or less well-defined grades with distinctive names. Such markets, and the local artisans who work in bamboo, are sources of much useful information not to be found anywhere in print.

## Some Bamboos Used in Housing

As far as we know, most of the bamboos of greatest usefulness and greatest versatility for building construction come from a few groups of related species, called genera. These genera are Arundinaria, Bambusa, Cephalostachyum, Dendrocalamus, Gigantochloa, Melocanna, Phyllostachys, and Schizostachyum in the Eastern Hemisphere and Guadua and Chusquea in the Western Hemisphere. But this is not to say that all of the most useful species are found in these genera.

For the purpose of those who wish to find and keep track of the best bamboos in any given locality, the vernacular names will serve better than the Latin. Latin names, however, are generally more useful in correlating information found in the literature. In this section, which sets forth some of the most useful species, with their locations, sizes, and uses, both Latin and vernacular names are given insofar as they are available.

1. Arundinaria alpina: Alpine Bamboo, Bambú Alpina (Italian).
   AFRICA: Kenya, Abyssinia, Sudan, Congo, Uganda, Tanganyika; 8,000-10,000 ft. Abundant in large stands.
   Culms: 60 ft. by 4 in.; commonly 45-50 ft. by $2\frac{1}{2}$ in.; rather thin-walled.
   Uses: General.
2. Arundinaria callosa: Uskong, Uspar, Spa (Khasia).
   INDIA: E. Himalaya and Khasia Hills, Assam; to 6,500 ft.
   Culms: 12-20 ft. by 1/2-1 in.
   Uses: Tying thatch.
3. Arundinaria elegans: Jilli (Naga).
   INDIA: Naga Hills; 5,000-7,500 ft.
   Culms: 12-20 ft. by 1/3-4/5 in.
   Uses: Walls of native huts.
4. Arundinaria falcata: Himalayan Bamboo, Ringál, Nirgál, Nágre, Narri, Garri, Gorwa, Spikso, Ningálo, Kewi, Tham, Utham Kutino.
   INDIA (Ravi) and NEPAL.
   Culms: 15-20 ft. by 1/2-3/4 in.
   Uses: Lining for roofs of houses.
5. Arundinaria griffithiana: Khnap (Khasia), U-spar.
   INDIA: Khasia and Jaintia Hills, Assam; to 4,500 ft.
   Culms: 12-20 ft. by $1-1\frac{1}{2}$ in.
   Uses: Tying thatch of native houses.
6. Arundinaria intermedia: Nigala (Nepal), Parmick (Lepcha), Titi Nagala, Prong Nok.
   INDIA and NEPAL: E. Himalaya; to 7,000 ft.
   Culms: 8-12 ft. by 2/5-1/2 in.
   Uses: Matting to cover walls and partitions.
7. Arundinaria khasiana: Namlong, U-kadac Namlong.
   INDIA: Khasia Hills; 5,000-6,000 ft.; often cultivated.
   Culms: 10-12 ft. by 1/2 in.
   Uses: Wattle-and-daub walls of native houses.

8. Arundinaria mannii: Beneng (Khasia).
   INDIA: Jaintia Hills, Assam; to 3,000 ft.
   Culms: To 30 ft. by 1/2 in.
   Uses: Withes for binding frames of native houses.
9. Arundinaria prainii: Kevva, Keva, Sampit (Naga).
   INDIA: Khasia, Jaintia, and Naga Hills: to 9,500 ft.
   Culms: Slender.
   Uses: Lath for walls of native houses.
10. Arundinaria racemosa: Maling (Nepal), Phyeum Miknu, Mheem, Pheong, Pithiu.
   NEPAL and INDIA (Sikkim): 6,000-12,000 ft.
   Culms: 5-15 ft. by 7/10-1 in.
   Uses: Roof construction and matting for native houses.
11. Arundinaria spathiflora: Ringál, Garu, Deo Ningal.
   INDIA: N.W. Himalaya; 7,000-9,000 ft.
   Culms: 25-30 ft. by $1\frac{1}{2}$ in.
   Uses: House construction.
12. Arundinaria wightiana: Chevari.
   INDIA: Southern and western parts; especially abundant on the Nilgiris.
   Culms: 10-15 ft. by 1 in.
   Uses: Matting.
13. Bambusa arundinacea: Thorny Bamboo, Berua, Kata, Koto (Assam), Ily, Mulu (Malay), Bans, Behor Bans (Bengali), Mulkas, Vedru (Telugu), Mundgay (Bombay).
   INDIA. Pantropic in cultivation.
   Culms: To 75 ft. by 6 in.; commonly rather crooked; only moderately strong and durable; lower branches very thorny.
   Uses: General.
14. Bambusa balcooa: Balku Bans (Bengali), Baluka (Assam), Borobans, Sil Barua, Teli Barua, Wamnah, Beru, Betwa.
   INDIA: Assam, lower Bengal, and Bihar.
   Culms: 50-70 ft. by 3-6 in.
   Uses: General; "best and strongest for building purposes" (Gamble).
15. Bambusa blumeana: Buloh Duri (Malay), Kida (Semang), Bambu Duri, Bambu Gesing, Pring Ori, P. Gesing (Java), Haur Chuchuk (Sudan).
   MALAYA, JAVA (native), SUMATRA, BORNEO, INDIA, INDO-CHINA, and PHILIPPINES (cultivated).
   Culms: 30-60 ft. by 3-4 in., thick-walled.
   Uses: General.
16. Bambusa khasiana: Serim, Tyrah (Khasia).
   INDIA: Khasia and Jaintia Hills, Assam, and Manipur; to 4,000 ft.
   Culms: 30-40 ft. by 1- 1 2/5 in.
   Uses: General.
17. Bambusa multiplex: Hedge Bamboo, Silver Leaf Bamboo, Ngau Kan Chuk (Chinese).
   CHINA: Kwangtung; to 1,000 ft.; now virtually pantropic in cultivation.
   Culms: To 30 ft. by 1 in.; internodes long, thin-walled; resistant to Dinoderus, the powder post beetle.
   Uses: Sheathing for roofs, wattle-and-daub wall construction. (Jamaica.)

18. Bambusa nutans: Pichle, Bidhuli, Nal Bans, Mukial, Makal, Mahlu, Mahl, Paoshi-ding-ying, Jotia, Deo-bans, Wa-malang, Seringjai.
INDIA: Lower Himalaya from the Jumna to Assam and E. Bengal, and Sikkim; to 5,000 ft.
Culms: 20-40 ft. by $1\frac{1}{2}$-3 in.; internodes 15-18 in.; wood strong, straight, hard, much esteemed.
Uses: General.

19. Bambusa polymorpha: Kyathaungwa (Burmese), Betua (Assam), Jama Betua (Bengali).
INDIA (E. Bengal) and BURMA: To 3,500 ft.
Culms: 50-80 ft. by 3-6 in.
Uses: General; "considered one of the best bamboos for walls, floors, and roofs of houses" (Watt).

20. Bambusa textilis: Wong Chuk, Mit Chuk (Chinese).
CHINA: Southeastern provinces. Now cultivated in the United States (Georgia, Florida, and California) and Puerto Rico.
Culms: To 40 ft. by 2 in.; internodes longish; wood rather thin.
Uses: Withes for binding house frames; matting for walls.

21. Bambusa tulda: Tulda, Jowa, Dyowa Bans, Mak, Makor, Kiranti, Matela, Peka Mirtenga, Wati, Wamuna, Wagi, Nalbans, Deobans, Bijuli, Jati, Jao, Ghora, Theiwa, Thaikwa.
INDIA (central E. Bengal and Assam) and BURMA: Most common bamboo of the rice country.
Culms: 20-70 ft. by 2-4 in.
Uses: General. Roofing, scaffolding, matting, etc.

22. Bambusa tuldoides: Punting-pole Bamboo, Chaang-ko Chuk, Yau-chuk (Chinese).
CHINA (cultivated in southeastern provinces and Formosa), MALAYA, BRAZIL, and EL SALVADOR.
Culms: To 55 ft. by 2 in.
Uses: General.

23. Bambusa vulgaris: Common Bamboo, Bambú (Spanish American), Buloh Minyak Haur, B. Tutul, B. Gading, Aur Gading, Pau, Po-o, Pook (Malay), Jajang Ampél, J. Gading, Pring Ampél, P. Legi, P. Tutul (Java), Awi Ampél, A. Gading, A. Haur, A. Koneng, A. Tutul (Sudan), Auwe Gadieng, A. Kunieng, Bambu Kunieng, B. Kuring-kuring (Sumatra), Pai Mai (Siam).
Pantropic in cultivation, in two color forms of culm: Plain green and green-striped yellow.
Culms: 20-70 ft. by 2-4 in.; wood moderately thick and strong; susceptible to invasion by Dinoderus, the powder post beetle.
Uses: General.

24. Cephalostachyum pergracile: Tinwa (Burmese), Latang (Naga), Madang (Singpho).
INDIA (Assam), BURMA, etc.: "After Dendrocalamus strictus perhaps the most abundant of all species" (Watt).
Culms: 30-40 ft. by 2-3 in.; internodes thin-walled.
Uses: General.

25. Chusquea spp.: Chusque, Suro, Carrizo.
CENTRAL and SOUTH AMERICA: Especially in Andean Highlands, Mexico to Chile and Argentina.
Culms: Generally long, slender, and relatively weak; pithy at center.
Uses: Sheathing for roofs, and lath for wattle-and-daub walls.

26. Dendrocalamus asper: Bulah Betong, B. Panching (Malay), Kuur (Sakai), Deling Petung, Jajang Betung, Pring Petung (Java), Awi Betung, Bitung (Sudan), Bambu Batueng, Pering Betung (Sumatra), Bontong (P.I., teste Hugh Curran, Jr.).
MALAYSIA: In Java, to 6,250 ft.; and throughout the archipelago to Luzon, P.I. Much planted.
Culms: To 100 ft. by 6-8 in.; short lower internodes very thick-walled.
Uses: General.

27. Dendrocalamus brandisii: Kyellowa, Waya, Wapyu (Burmese), Wakay (Warren), Waklu.
INDIA (eastern slopes of Pegu Yoma and Martaban Hills; to 4,000 ft.) and BURMA.
Culms: 60-120 ft. by 5-8 in.
Uses: General.

28. Dendrocalamus giganteus: Wabo (Burma), Worra (Assam).
INDIA: Calcutta, northwards to Tenasserim, Burma, Ceylon.
Culms: 80-100 ft. by 8-10 in.
Uses: General.

29. Dendrocalamus hamiltonii: Wabo-myetsangye (Burmese), Chye (Dehra Dun), Tama (Nepal), Pao (Lepcha), Kokwa (Assam), Pecha (Bengali), Tonay (Mikis), Wanoke (Garo).
INDIA and BURMA: N.E. Himalaya, Assam Valley, Khasia Hills, Sylhet, east to upper Burma, and west to Sutlej. The common bamboo of the Darjeeling Hills, Terai, etc.; much cultivated.
Culms: 40-60 ft. by 4-7 in.; internodes 12-20 in. long; somewhat soft and relatively thin-walled.
Uses: General; not highly esteemed.

30. Dendrocalamus hookerii: Seiat, Ussey, Sejasai, Sijong, Denga, Ukotang, Patu, Tili, Kawa Ule.
INDIA to UPPER BURMA: To 5,000 ft.
Culms: 50-60 ft. by 4-6 in.; internodes 18-20 in. long; walls about 1 in. thick.
Uses: General.

31. Dendrocalamus longispathus: Khang, Ora, Wa-ya, Talagu.
INDIA (E. Bengal) and BURMA.
Culms: To 60 ft. by 3-4 in.; internodes 10-24 in. long; walls 1/2 in. thick.
Uses: General; "not highly esteemed as building material, but used when better kinds are not available" (Watt).

32. Dendrocalamus membranaceus: Wa-ya, Wa-yai, Wa-mu, Wapyu (Malay).
INDIA and BURMA: Moist forests at low elevations.
Culms: To 70 ft. by 4 in.; internodes 9-15 in. long; wood 1/4-3/8 in. thick.
Uses: General.

33. Dendrocalamus merrillianus: Bayóg (Ilocos), Kawayan-bayóg (Pangasinan).
PHILIPPINE ISLANDS.
Culms: "Tall and slender; internodes thick-walled, strong" (Brown and Fischer).
Uses: General.

34. Dendrocalamus sikkimensis: Pugriang (Lepcha), Wadah (Garo Hills), Tiria, Vola (Nepal).
INDIA (Sikkim) and BHUTAN: 4,000-6,000 ft.

Culms: 50-60 ft. by 5-7 in.
Uses: General.

35. Dendrocalamus strictus: Male Bamboo, Bans, Bans Kaban, Bans Khurd, Karail, Mathan, Mat, Buru Mat, Salis Bans, Halpa, Vadur, Bhiru, Kark, Kal Mungil, Kibi Bidaru, Radhanapavedru, Kauka, Myinwa.
INDIA and BURMA: On all moderately dry hills except in N. and S.E. Bengal and Assam.
Culms: 30-50 ft. by 1-3 in.; very strong; often solid.
Uses: General.

36. Gigantochloa apus: Bamboo Apus, B. Tali (Malay), Delingi Apoos, D. Tangsool, D. Pring, Pring Apes, P. Apoos, P. Tali (Java), Awi Tali (Sunda), Pereng Tali (Madura).
JAVA and SURINAM: "Plains to high mountains" (Ochse).
Culms: To 65 ft. by 4 in.; internodes up to 26 in. long; wood 1/4-1/2 in. thick.
Uses: General; one of the most useful bamboos.

37. Gigantochloa levis: Kawayan-bó-o, K. Sina, K. Puti, Bohó (Tagalog), Bokó, Bolo, Botong (Bisaya), Butong (teste Hugh Curran, Jr.).
PHILIPPINE ISLANDS: Wild and cultivated.
Culms: To 65 ft. by 6-8 in.; "very straight, easily worked" (Brown and Fischer).
Uses: General.

38. Gigantochloa macrostachya: Tekserah, Madi, Madaywa, Wanet, Wabray.
INDIA (Assam, Chittagong) and BURMA.
Culms: 30-50 ft. by $2\frac{1}{2}$-4 in.
Uses: General.

39. Gigantochloa verticillata: Whorled Bamboo, Bamboo Andong (Malay), Pring Soorat (Java), Andong Kekes, Awi Andong, A. Gambong, A. Liah, A. Soorat (Sunda).
JAVA.
Culms: To 68 ft. by 6 in.; internodes with pale yellow stripes; wood up to 4/5 in. thick.
Uses: General; "next to G. apus the most useful bamboo in Java" (Ochse).

40. Guadua aculeata: Tarro (Central America).
MEXICO to PANAMA.
Culms: To 75 ft. by 5 in.; internodes relatively short; wood of moderate thickness.
Uses: General.

41. Guadua amplexifolia: Cauro (Nicaragua, Mosquito).
VENEZUELA to MEXICO.
Culms: To 60 ft. by 4 in.; internodes relatively short, lower ones semisolid.
Uses: General; the least desirable of the listed species for the purpose, but much used in Nicaragua.

42. Guadua angustifolia: Guadua.
ECUADOR, COLOMBIA, and PERU.
Culms: To 90 ft. by 6 in.; internodes relatively short; wood up to 3/4 in. thick.
Uses: General; the best known and most versatile species of the genus. In those areas of Ecuador and Colombia where this bamboo occurs in spontaneous stands adequate to supply local needs, it is used to a remarkable extent in house con-

struction. In fact, some of this bamboo is used in nearly every house in such areas. Many structures are built almost entirely of it.

This bamboo apparently has a relatively high resistance to both rot fungi and wood-eating insects. It has been observed repeatedly that ordinary hardwoods used in conjunction with this bamboo have had to be replaced because of insect damage while the bamboo still remains serviceable. The original untreated siding, consisting of boards of this bamboo, in a 40-year-old plantation house at Pichilingue in the Department of Los Ríos, Ecuador, was still in a serviceable condition in 1945, long after the hardwood floors had had to be replaced because of insect damage.

43. Guadua superba: Marona.
    BRAZIL: Acre, Río Purus.
    Culms: To 75 ft. by 5 in.
    Uses: General.

44. Melocanna baccifera: Terai Bamboo, Muli, Metunga (Bengali), Tarai (Assam), Wati (Cachari), Artem (Mikir), Turiah (Naga), Watrai (Garo), Kayoungwa (Magh), Kayinwa (Burmese), Paia, Taria, Pagutulla.
    INDIA and BURMA.
    Culms: 50-70 ft. by $1\frac{1}{2}$-3 in.; internodes 12-20 in. long; straight, thin-walled, but strong and durable. "In Chittagong and elsewhere [this is] the most common species and the one most universally employed for building purposes" (Gamble).
    Uses: General.

45. Oxytenanthera abyssinica: Arkai, Chommel.
    AFRICA: Abyssinia to Angola and Gold Coast.
    Culms: 25-50 ft. by $1\frac{1}{2}$-3 in.
    Uses: General.

46. Oxytenanthera nigrociliata: Poday (Andaman), Washut (Garo), Bolantgi Bans (Orissa), Lengha (Java).
    INDIA, ANDAMAN ISLANDS, BURMA, JAVA, and SUMATRA.
    Culms: 30-40 ft. tall.
    Uses: General.

47. Phyllostachys aurea: Buddha Bamboo, Hotei-chiku (Japanese), Fat-to Chuk (Chinese).
    CHINA and JAPAN. Now cultivated nearly all over the world in temperate zone.
    Culms: 25 ft. by 1 in.
    Uses: Suitable for light elements of house construction.

48. Phyllostachys bambusoides: Giant Timber Bamboo, Madake (Japanese), Kam Chuk (Chinese).
    CHINA and JAPAN. Now cultivated in mild temperate areas of the United States.
    Culms: To 75 ft. by 6 in.; straight; wood of moderate thickness but excellent quality.
    Uses: General.
    NOTE: In China numerous other species of this genus are much used in building houses.

49. Pseudostachyum polymorphum: Filing (Nepal), Purphiok, Paphok (Lepcha), Wachall (Garo), Bajal, Tolli, Ral (Assam), Bawa (Burmese).
    INDIA (E. Himalaya, Assam, Sikkim) and UPPER BURMA.

Culms: To 50 ft. by 1 in.; internodes long, thin-walled.
Uses: Lath, matting, withes for tying frames of huts.

50. Schizostachyum hainanense: Tang Chuk (Chinese).
CHINA: Hainan Island.
Culms: To 100 ft. by 1 in.; internodes long, thin-walled.
Uses: Lath, matting.

51. Schizostachyum lima: Bolo, Bagacay (teste Hugh Curran, Jr.).
PHILIPPINE ISLANDS: Luzon, Davao.
Culms: 25-30 ft. by 1 in.; internodes very long, thin-walled.
Uses: Matting, shingles, thin lath.

52. Schizostachyum lumampao: Lakap (Bosayan), Tamblang (Bila-an).
PHILIPPINE ISLANDS: Luzon.
Culms: To 60 ft. by 3 in.; very straight; 40 ft. to first branch; thin-walled.
Uses: Boards, shingles (teste Hugh Curran, Jr.).

53. Teinostachyum dullooa: Dulooa (Assam), Paksalu, Pogslo, Wadroo, Gyawa.
INDIA: Assam.
Culms: 20-30 ft. by 1-3 in.; internodes to 40 in. long; thin-walled.
Uses: Lath, matting.

54. Thyrsostachys oliverii: Thanawa (Burmese), Maitong (Kachin).
INDIA and UPPER BURMA: To 2,000 ft.
Culms: 50-80 ft. by 2-2½ in.; "greatly in request" (Gamble).
Uses: General.

55. Thyrsostachys siamensis: Kyaung-wa.
THAILAND and BURMA.
Culms: 25-40 ft. by 1½-3 in.; very strong and straight; unbranched below.
Uses: General.

The following two woody grasses, though not true bamboos, yield culms that are used in building houses.

56. Arundo donax: Giant Reed (Hitchcock), Vara de Coheta (El Salvador).
Pantropic and extending into milder parts of the temperate zone in cultivation.
Culms: To 20 ft. by 1 in.; hollow, thin-walled, the surface smooth and shining.
Uses: Wattling.

57. Gynerium sagittatum: Uva grass (Hitchock), Caña Arava (Cuba), Caña Blanca (Panama), Caña Amarga (Venezuela), Vara de Tusa (El Salvador), Uba (Brazil, teste Clarissa Rolfs).
TROPICAL AMERICA: Principally at low elevations.
Culms: Commonly to 25 ft. by 1 1/4 in., the internodes filled with pith, which shrivels and shrinks upon drying; covered with persistent sheaths.
Uses: Walls and partitions, ceiling finish, roof sheathing.

For convenience, the foregoing species are regrouped in the following tabulation according to their specialized adaptation to particular uses in house construction. The numbers refer to the species just listed.

Frame: 1, 13-16, 18, 19, 21, 23, 26-28, 30-46, 48, 54, 55.
Sheathing and ceiling cover:
Whole culms, 1, 4, 10, 17-22, 24, 25, 41, 44-50, 54-57;
Strips, 1, 14-16, 18, 19, 21-23, 26-34, 36-46, 48-55.
Roof covering:
Tiles, 13-15, 19, 23, 26-32, 37-40, 42, 43, 48;
Shingles, 50-53.
Walls:
Wattling, 1, 4, 9, 13, 14, 16, 18-34, 36-56,
Whole or half culms, 3, 7, 14-40, 42-48, 50-52, 54, 55, 57.
Floor covering:
Boards, 1, 16, 19, 27, 28, 31, 32, 39-43, 48;
Strips, 1, 13, 16, 18, 19, 21-23, 27-34, 36-40, 42-46, 48.
Matting: 2, 5, 6, 10, 12, 16, 19, 20, 24, 36, 39, 44, 48-53, 56.
Lashings: 1, 2, 5, 8, 20, 36, 39, 48, 49.
Forms for poured concrete:
Boards, 1, 16, 19, 27, 28, 30, 31, 39, 40, 42, 43, 48;
Shoring, 1, 14-16, 18, 19, 21, 27, 28, 30, 31, 33-35, 37-43, 45, 46, 48, 54, 55.
Scaffolding: 1, 13-16, 18, 19, 21-23, 26-28, 30, 31, 33-43, 45, 46, 48, 54, 55.
Troughs: 13-15, 19, 23, 27-31, 34, 37-44, 48.
Pipes: 14, 15, 19, 23, 27, 28, 30, 31, 34, 37-44, 48.

## Shortcomings of Bamboo and How to Overcome Them

The culms of some bamboos have certain characteristics (in combinations, and in degrees, which vary from species to species) that limit or reduce their suitability or versatility as building material. A careful study of these limitations, however, shows that most of them can be overcome, or minimized appreciably.

### Variable Dimensions

It is difficult to secure culms very closely standardized to any given set of dimensions. For this reason, the processing or fabrication of bamboo cannot easily be mechanized, and its utilization generally falls within the realm of a handicraft.

With sufficiently large supplies of culms available, the disadvantages of this variability may be overcome to a certain extent by exercising special care in the selection and grading of the material. Further compensation may be achieved by giving special attention to the development of skills in the cutting and matching of pieces.

### Uneven Surfaces

The use of certain bamboos is made difficult by the crookedness of the culms, the prominence of the nodes, the uneveness of size and shape of the internodes, and the rate of taper. This uneveness and the taper, which is more marked toward the tip of the culm, may make it difficult to achieve a tight, weatherproof, verminproof construction.

To overcome the effects of uneveness, the builder should select bamboos with use requirements in mind. The different portions of each culm should be classified according to their dominant characteristics, and the culms should be cut up on this basis. The various cuts should be segregated into groups according to the purposes for which they are best suited. Zigzag or curved culms may be used for purposes where shape is unimportant, or where they may give an artistic effect. Special processing, such as dressing off nodes of whole culms, may permit closer fitting. Culms may be split to make boards or lathlike strips. Finally, the design of the structure and its architectural details may be modified to a certain extent to utilize more effectively the nature and peculiarities of the building material.

### Extreme Fissibility

With the exception of thick-walled bamboos such as Bambusa tulda and Dendrocalamus strictus, or those with relatively soft wood, such as certain species of Guadua, bamboos have a tendency to split easily, a tendency that precludes the use of nails. It also limits the range of techniques suitable for the framing or joining of structural units.

Suggested remedies are to use the less easily split culms of thick-walled species for purposes where high fissibility is a disadvantage; to make end cuts just beyond a node where feasible (the nodes have a higher shear coefficient than the internodes and hence show less tendency to split); to fasten joints by means of thongs or other lashing materials; to chisel or bore holes to accommodate nails, screws, or pegs.

### Low Durability

Some bamboos are highly susceptible to invasion and partial destruction by wood-eating insects, such as termites and powder post beetles. Species with relatively low susceptibility may be selected; and the culms may be treated to make them less vulnerable. Cut surfaces at the ends of the culms are places where insects usually effect an entrance and should be treated with special care.

Most bamboos also show high susceptibility to rot fungi, especially under damp conditions and in contact with moist soil. Here again, selection of species will help to overcome the weakness, but some form of preservative treatment should be used to prolong the usefulness of bamboos exposed to moist soil.

## Preservation

Bamboos vary from species to species in the susceptibility of their culms to invasion by wood-eating insects. Although the culms of a few bamboos, notably Guadua angustifolia, apparently have a relatively high resistance to both wood-eating insects and rot fungi, almost all appear to be more or less susceptible under certain conditions. According to the observations of Plank, during the course of experiments carried out at the Federal Experiment Station at Mayaguez, P. R., there is a rather definite correlation between susceptibility to invasion by wood-eating insects and the starch and moisture content of the wood of the culms. A similarly correlated susceptibility to rot fungi probably exists.

Both the starch and the moisture content of the wood vary with the species and with the age of the culm, especially during the first two years or so. The starch content may increase or decrease from the base to the tip of the culm. Any reduction of the starch or moisture, or both, tends to reduce the incidence of attack by wood-eating insects. It has been found at the Federal Experiment Station in Puerto Rico that clump-curing the culms is a natural and effective means of reducing their susceptibility. The essential steps of this procedure follow:

1. Sever each culm at the base but keep it in an upright position in the clump.
2. Dust the fresh-cut lower end of the culm at once by patting it with a dusting bag filled with a 5-percent (1:20) mixture of DDT and talc.
3. By means of a block of stone or brick or wood placed under it, or a stick thrust into the lower end, raise each culm off the ground to prevent staining or deterioration of the wood by fungi.
4. Permit culms to remain in this position for 4 to 8 weeks, depending upon weather conditions. The objective is to get the culms as dry as possible before taking them to the vicinity of buildings, where the wood-eating insects usually abound. Caution should be observed to prevent the staining of the culms by rain after the tissues have become dry enough to be readily permeable. When they have been dried as much as conditions permit, the culms may be taken down and trimmed. As a special precaution, dust all cut surfaces at this point with 5-percent mixture of DDT powder and talc. Finish the seasoning process in a well-ventilated shelter; do not store seasoned bamboo culms in the open, where they are exposed to rain and dew.

This seasoning procedure should be completely effective in preventing invasion by wood-eating insects during the period when the culms are most susceptible. Depending upon various factors, it may be necessary to provide further protection. During long periods of storage, for example, periodic spraying of the stacks and the storage shelves with 5-percent DDT dispersed in water or light oil is recommended. The schedule for such treatments should be worked out for the local condition. A six-month interval is suggested tentatively as a starting point.

Effective protection of bamboo culms against decay, whether in storage or in service, can be accomplished by guarding them against wetting by rain or by contact with the soil, and by maintaining good ventilation.

No data are available on the effectiveness of any particular treatment for the prevention of rot in bamboo culms when they are in contact with moist soil. To fill this gap in our knowledge, Dr. G. A. Greathouse, member of the National Research Council,

has suggested that experiments be carried out to test the effectiveness of the insoluble form of pentachlorophenol applied to the soil impinging on the bamboos. Some of the standard wood-preservation methods also might be applied, with proper consideration being given to the physical characteristics of bamboos.

For much useful information on preservation of bamboo, consult the articles by H. J. Plank, J. C. M. Gardner, E. P. Stebbing, and G. N. Wolcott listed in the bibliography.

## Skill Requirements

The skills required in building with bamboo are the basic ones of the builder's trade, together with others that relate particularly to the peculiarities of bamboo as a material for house construction. Among the latter are these—

Judging the maturity, soundness, and quality of bamboo culms.

Determining the suitability of a given bamboo for a given purpose.

Sawing a bamboo culm without raising splinters.

Joining and fastening bamboo elements in house construction.

Making bamboo tubing, troughs, and roofing "tiles."

Splitting a bamboo culm into strips for lath, withes, and lashings.

Making bamboo boards.

Weaving bamboo lattices, wattling, and matting.

Making bamboo shingles.

Making bamboo nails and dowels.

These and other techniques will be treated fully in a general work on bamboo utilization now under preparation.

In most areas where bamboo suitable for building purposes occurs in sufficient quantities to justify its use, native artisans will be found who are acquainted with the basic techniques of building with it. As suggested elsewhere in these pages, consultants on housing and housing materials will do well to acquaint themselves with these men and their skills, and to work with them in getting new ideas tried out, both in the workshop and on the building site.

## Tool Requirements

Bamboo is notorious for its dulling effect on edged tools. This effect is due to the silica with which the tissues are more or less heavily impregnated. The effectiveness of edged tools will be maintained at a higher level, and the time consumed in sharpening will be greatly reduced, if tools made of molybdenum steel or an equally hard alloy can be secured for working bamboo.

The tools essential to building with bamboo are relatively few and simple. In fact, many a bamboo house has been built with no more tools than a machete. But wherever the use of bamboo is to be refined or elaborated to any extent, additional tools are required. Some of these may have to perform work peculiar to the processing of bamboo and, for this reason, would not be available at the sources of standard carpentry tools. The Chinese tub- and bucket-maker who uses bamboo as his raw material requires an array of some thirty different tools and gadgets, all of which are employed at one stage or another in the measuring, cutting, fitting, and assembling of the various parts. With the following tools, the standard bamboo elements for building purposes may be processed and assembled:

| Tool | Use | Recommended specifications |
|---|---|---|
| Machete | Miscellaneous: felling and and trimming culms, and cutting them to lengths; removing fragments of diaphragms from bamboo boards; etc. | Preference of the user decides type of blade selected; long, fairly heavy blade recommended. |
| Hacksaw | Felling culms, removing branches, cutting culms to length. | Large size; ample supply of molybdenum steel blades, with 18 and 24 teeth per inch. |
| Tripods or tresties | Elevating culms and holding them firm for sawing to length, cracking nodes. | May be made locally, following the pattern locally preferred. |
| Ax | Cracking the nodes of large culms to make boards. | Light-weight ax with a narrow but thick, strongly wedge-shaped bit. |
| Hatchet or small ax | Cracking the nodes of smaller culms for making boards. | Similar to the ax, but smaller in size and fitted with a short handle. |
| Whetstone | Sharpening edged tools. | Carborundum; coarse-grained on one side, fine on the other. |
| Spud | Removing diaphragm fragments and excess soft wood at basal end of bamboo boards. | Long handle; broad blade set at an angle to operate parallel with surface of board. |

| | | |
|---|---|---|
| Adz . . . . . | Removing diaphragm fragments and excess soft wood at basal end of bamboo boards. Spud is more convenient, but the adz is more generally available. | Standard design; best-quality steel. |
| Gouge . . . . . | Removing diaphragms to make troughs and drain pipes from split or opened culms. | Curved (front bent); 1-inch and $1\frac{1}{2}$-inch bits. |
| Chisel . . . . . | Making holes in culms to accomodate lashings for end ties. | Best steel (molybdenum steel if available); 3/4-inch bit. |
| Drill . . . . . | Making holes to accomodate bamboo pins or dowels. | Hand- or power-driven drill; metal drilling bits, best steel, assorted sizes, 1/8-1/2 inch. |
| Wood rasps . . . . . | Leveling prominent culm nodes. | Large size, with one flat side, one convex; coarse, medium, and fine teeth. |
| Splitting jig . . . . . | Facilitating the splitting of whole culms or sections into several strips at once. | See sketches, fig. 24. |
| Splitting knives . . . . . | (a) For splitting small culms.<br>(b) For making bamboo withes. | (a) Short handle; broad blade (fig. 25 A).<br>(b) Long handle; blade beveled on one side only; to be specially made (fig. 25 B). |
| Rods of reinforcing steel. | Breaking out the diaphragms of unsplit culms. | Suggested minimum: one each of 3/4 inch by 10 feet and 1/2 inch by 10 feet. Other dimensions to meet special needs. Hardwood or bamboo pole may be substituted. |
| Wire pincers . . . . . | For handling wire used for lashings. | Conventional type with long, narrow jaws and wire-cutting feature. |

## Differentiation and Evaluation of Species

"Bamboo" is a collective term here intended to indicate the culms (stems), or the product of the culms, of any of a group embracing many different kinds of grasslike woody plants. The term may apply also to living plants of any of the species or varieties comprising the group. Anyone who wishes to use bamboo or foster its use is advised to learn to discriminate between the individual kinds, and their respective characteristics, instead of thinking vaguely of bamboo as though it were all one thing. He should do so because the different kinds of bamboo are characterized by properties that together determine the suitability of their culms, or the substance thereof, for a given purpose. This point will be recognized at once as basic.

Once this principle is recognized, the next step is to become acquainted with what kinds of bamboo are available locally and to learn how their characteristics relate them to the existing need for building materials. The following general suggestions are intended more as a systematic analysis of the problem than as a hard and fast procedure under any particular set of circumstances:

1. With the aid of a local resident who knows the bamboos (preferably an artisan who has some personal knowledge acquired through the actual use of bamboo as building material, or through the fabrication of bamboo objects), study the local bamboos—in markets, in shops where they are being fabricated, in houses where they have been employed as building materials, and in the field as living plants.
    a. List all recognizable entities by local names, noting all of the names that are used interchangeably for more than one kind. Distinguish those that are applied in a general sense from those that are specific.
    b. Establish for each entity a numbered card or information sheet on which to assemble and systematize information subsequently gathered, with reference to documenting specimens, photographs, descriptive notes, and so forth.
    c. Document the identity and peculiarities of each kind by means of standardized samples from representative culms, and by means of pressed and dried specimens, photographs, sketches, and descriptions of the different parts of the plant. (For details with regard to structures needed and the procedures to follow, see the section on how to collect bamboos.) It will be a great service to the cause of science, and to those who are endeavoring to extend and systematize the existing knowledge of the various kinds of bamboos and their uses, if duplicates of such material (specimens, photographs, and notes) can be sent to a specialist for study, identification, and permanent preservation in a centrally located repository, such as the National Herbarium, Smithsonian Institution, Washington 25, D. C.
    d. Learn to recognize and distinguish the different kinds of bamboo under as many different circumstances as possible by means of the habit of the plant, the culm characteristics, the culm sheaths, and so forth.
    e. List the uses for which each kind is employed locally, checking by constant personal observation and repeated inquiry among bamboo workers.
    f. List the characteristics of each kind as related to its suitability for various uses in the local economy (add your own observations to those of the local bamboo workers).

g. Restudy structures and objects made of bamboo with a view to—
   (1) Confirming or eliminating listed uses as reported by the bamboo workers.
   (2) Ascertaining the actual and relative durability of the various kinds in use as building material; causes of deterioration; possible means of increasing durability of parts or kinds that give way first, either by improved design or by use of another kind of bamboo, or by the use of preservatives.
   (3) Listing the characteristics of each kind as related to its suitability for various uses.

2. Set up comparative tests of the local bamboos to ascertain their relative durability under either actual or simulated conditions of use. In drawing up the outline for the tests, keep in mind the following possible variables that may have a bearing on the outcome of the tests: Kind of bamboo, age of culm, seasoning and storage history, preservative treatments, and conditions of exposure in soil and in air. The outline of such formal tests, and the forms for recording data, should be checked by competent specialists in experimental design.

## Collecting Specimens for Identification

Our goal is the recognition and delineation of the distinct entities with which we are to deal, as botanical units and as potential sources of useful raw materials. To this end, it is important to collect all bamboos whether they be in flower or not. A properly selected, labeled, and preserved series of the vegetative structures called for below will be entirely adequate as a means of recognizing and describing a given bamboo and distinguishing it from other kinds. True, reproductive structures are traditionally required for identifying bamboos and many other plants, but vegetative structures have proved to be a practical basis for field identification of bamboos: the average clump of bamboo presents flowers only once, after many years of growth.

Never mix material from two distinct plants under the same number on the assumption that they represent the same bamboo. Be wary lest you collect, under one number, two or more different bamboos so closely associated in their growth as to appear to be all a part of the same plant. Such mixtures can cause much trouble.

Make specimens for permanent preservation. Fragmentary specimens collected hastily, "just for identification," frequently turn out to represent new species or new records. Such specimens, often too fragmentary to be identified with confidence but too intriguing to discard, may be more of a burden than a help.

To identify a bamboo with confidence, one should have as complete a representation as possible—by specimens, photographs, or descriptions—of the following structures: Culm sheaths, leafy twigs, branch complement, culm nodes, and internodes and rhizomes. Flowering branches, seeds, and seedlings will add greatly to the value and usefulness of the specimen. Seedlings and small plants may be pressed entire.

Culm Sheaths. Collect at least ten culm sheaths, complete and in good condition, preferably from nodes above the fifth node of a mature-sized culm; if possible, collect also several from mid-culm nodes. Mark with node number and collector number. Press flat. If too large for the press, cut or fold to 10 by 15 inches or less; keep all parts. If you cannot spread a sheath without breaking it, let it roll up and do not press it. Tie paper over tips of unpressed sheaths to protect fragile parts. Persistent sheaths may be left attached to a section of culm of appropriate length, dried, and sent in thus. Young sheaths, if slender enough to dry readily by artificial heat, may be sent in whole. The more complete the series and array of culm sheaths collected, the more reliable the identification can be. Represent the whole series as fully as circumstances permit.

Leafy Twigs. Include big and little leaves, young and old, healthy and diseased (if any). Press promptly, before the leaves curl, in driers thick and soft enough to prevent crinkling. At first change of driers, arrange leaves so that some show the upper surface, some the lower.

Branch Complement. Get at least one typical example of a branch complement from middle or lower middle of series on culm of mature size. Include a segment of culm at least 12 inches long embracing the selected branch complement. Cut off branches about 2 inches from their base. Mark node number and collector number on culm. The culm segment may be split and the part opposite the branch complement dis-

carded if space is limited. Additional specimens, from lower and upper part of culm, are desirable but not necessary.

Culm Nodes and Internodes. Culm nodes and internodes are best represented by a segment of mature-sized culm embracing nodes 4 and 5 aboveground and the internode between. Mark with node and collector numbers. Cut back branches, if any, to 6 inches. Segment may be split once to accommodate limited space, or to facilitate drying.

Rhizomes. Obtain at least one complete example of a rhizome; if facilities permit, it is preferable to obtain two or more units attached together to show typical branching habit. Wash and trim roots. Mark or tag with collector number. A sketch or photo, showing proportions and branching habit, will serve in place of an actual specimen if facilities are limited.

Flowering Branches (if present). Collect as long a series of flowering branches as possible to show range of variation in habit, leafiness, stages of development, and so forth. Seek fruits (mature fruits usually fall quickly) and put some in folded paper to call attention to them and prevent loss. Distribute specimens thinly between thick driers; change often to dry promptly and prevent breaking up of spikelets. Unless absolutely necessary to save paper, do not pile dried specimens together but keep them in original folders to avoid serious damage to spikelets. Put single example of long, fragile spikelets (Arthrostylidium) in separate envelope or folded paper to ensure correct floret count.

Seedlings. Special search should be made for seedlings under and near flowering bamboos. In case of doubt as to their identity, seedlings should be given a separate collector number from that of the supposed parent plant, but cross-reference should be made in notes, setting forth evidence of their supposed relationship. The "seed" still attached to very small seedlings is sufficient for identification if kept intact.

Bulky specimens that cannot be pressed flat require special handling. Among these are nodes and internodes, branch complements, rhizomes, and culm sheaths, especially those that come from large plants. Always mark them properly with the node number and collector number, either on a clear surface or on a durable tag of cloth or tough paper. Do not put bulky specimens in press with leafy twigs or flowering twigs, but dry them separately and promptly in sun or over fire. Keep them in open air as much as possible and do not wrap or store them in closed container until thoroughly dry.

Minimal notes should include data on the following: (1) Habit of clump and culm, (2) maximum height of culm and diameter at base, (3) length and diameter of 5th internode, (4) length and number aboveground of longest internode (make measurements on largest accessible specimen; estimated measurements should be designated as such), (5) location, described or sketched in relation to nearest inhabited place and/or point shown on available map, so that it can be found again, (6) habitat, (7) local names (dialect), (8) local uses, (9) date collected, (10) collector's field number, and (11) reference to photos, sketches, and so forth if kept in separate book.

Photographs are useful for showing the habit and proportions of a typical clump, and the following features, particularly if time is insufficient for making specimens of them Branch complement, culm node and internode, and rhizome habit and branching. Habitat pictures are useful if the names of the associated plants are recorded, or if ecological features are clearly shown. Be sure to correlate photograph numbers with collector numbers at the time the picture is taken.

Sketches, even, can aid identification. The simplest sort of diagrammatic sketch may be used to represent structures that, for good reasons, must be omitted from the specimen.

## Selected References


Bauman, R. Versuche über die Elastizität und Festigheit von Bambus . . . Zeitschraft des Vereines deutscher Ingenieure 56: 229-232. Illus. 1912.

Bond, P. S. Some Experiments in the Use of Bamboo for Hasty Bridge Construction. U. S. Army Corps of Engin., Prof. Memo. 5: 593-602. Illus. 1913.

Bor, N. List of the Grasses of Assam. Indian Forest Rec., new series (Botany) 1: 58-62. 1938.

Broersma, G. [Editorial apropos van der Woude's article on building materials.] OSR News (monthly publication of Organization of Scientific Research for Indonesia) 3: 81. 1951.

Brown, W. H., and Fischer, A. F. Philippine Bamboos. In W. H. Brown (ed.), Minor Products of Philippine Forests. Philippine Dept. Agr. and Nat. Res., Bur. Forestry Bul. 22. v. 1, pp. 249-310. Illus. 1920.

Burkill, I. H. Dictionary of the Economic Products of the Malay Peninsula. 2 vols. London, 1935.

Camus, E. G. Les Bambusaceés. Illus. Paris, 1913.

Cohen, W. E. Utilization of Bamboo in Japan. Austral. Commonwealth Sci. and Indus. Res. Organ., Div. Forest Prod. South Melbourne, Australia, April 1947. [Mimeographed.]

Crevost, Ch., et Lemarié, Ch. Catalogue des Produits de l'Indochine, v. 2, pp. 196-209. Published by the Government of Indochina, originally in fascicles in Bulletin Economique de l'Indochine. Illus. 1919-21.

Deogun, P. N. Silviculture and Management of the Bamboo Dendrocalamus strictus Nees. Indian Forest Rec., new series (Silviculture), v. 2, No. 4. Illus. 1937.

De Wildeman, E. Les Bambous en Afrique. Congo (Rev. Gén. Colonie Belge) 40: 1-30. 1921.

Espinoza, J. C. Testing, Bending and Compressive Strength of the Common Philippine Bamboo (Bambusa spinosa Roxb.). Philippine Jour. Sci. 41: 121-135. Illus. 1930.

Fairchild, D. G. Exploring for Plants. Illus. New York, 1930.

——— World Was My Garden. Illus. New York, 1938.

——— Garden Islands of the Great East. Illus. New York, 1943.

——— World Grows Round My Door. Illus. New York, 1947.

Gamble, J. S. Bambuseae of British India. Ann. Roy. Bot. Gard. (Calcutta), v. 7. Illus. 1896.

——— Manual of Indian Timbers. 2d ed. London and New York, 1922.

Gardner, J. C. M. Note on the Insect Borers of Bamboo and Their Control. Forest Res. Inst., Indian Forest Bul. 125. Illus. 1945.

Glenn, H. E. Bamboo Reinforcement of Portland Cement Concrete Structures. Clemson Agr. Col., S. C., Bul. 4. Illus. May 1950.

Gourou, Pierre. Les Paysans du Delta Tonkinois. Publications de l'Ecole Française de l'Extrême-Orient, v. 27. 640 pp. Illus. Paris, 1936.

Heck, G. E. Properties of Some Bamboos Cultivated in the Western Hemisphere. U. S. Dept. Agr., Forest Serv., Forest Prod. Lab., No. D1765. Illus. 1950.

Heyne, K. De Nuttige Planten van Indonesie, 3d ed., v. 1, 285-293. 's-Gravenhage, van Hoeve. 1950.

Kumpe, G. Experimental Bamboo Truss. Mil. Engin. 29: 288-289. 1937.

Kurz, S. Bamboo and Its Uses. Indian Forester 1: 219-269; 335-362. Illus. 1876.

Limaye, V. D. Bamboo Nails, Their Manufacture and Holding Power. Indian Forest Rec., new series (Utilization) No. 3. 12 pp. Illus. 1943.

——— Strength of Bamboo (Dendrocalamus strictus). Indian Forester 78: 558-575. Illus. 1952.

Marrero, José. Utilización de la Caña Guadua en Ecuador. Caribbean Forests 5: 145-151. Illus. 1944.

McClure, F. A. Bamboos for Farm and Home. U. S. Dept. Agr. Yearbook (separate No. 2101), pp. 735-740. 1948.

——— Bambúes para El Salvador. El Salvador, Min. Agr. y Ganad., Cent. Nac. Agr., Bol. Téc. 7. Illus. 1951.

——— Some Preliminary Tests on the Longitudinal Crushing Strength of hua-m' é chu, a variety of Bambusa tuldoides. Lingnan Sci. Jour. 17: 9-15. Illus. 1938. (This bamboo was later described as a new species: Bambusa pervariabilis McClure.)

Meyer, H. F., and Eklund, B. Tests of the Mechanical Properties of Bamboo. Eng. Soc. China, 22: 3-31. 1924.

Mission de l'Ecole Nationale Supérieure des Beaux-Arts de Paris. Construction au Camaroun. Batir No. 27, pp. 47-51. Published by Société de Propagande et de Diffusion des Techniques du Bâtiment. Paris, December 1952.

Morse, Edward S. Japanese Homes and Their Surroundings. Illus. Boston, 1886.

Narayanamurti, D., Purushotham, A., and Pande, J. N. Preservative Treatment of Bamboos. Part I. Treatment of Green Bamboos with Inorganic Preservatives. Indian Forest Bul. 137. Published by the Forest Research Institute, Dehra Dun, India. Illus. 1947.

Parodi, L. R. Las Bambuseas Indigenas en la Mesopotamia Argentina. Rev. Argentina Agron. 3: 229-244. Illus. 1936.

——— Los Bambúes Cultivados en la Argentina. Rev. Argentina Agron. 10: 89-110. Illus. 1943.

Plank, Harold K. DDT for Powder Post Beetle Control in Bamboo. Science 106: 317. 1947.

——— Biology of the Bamboo Powder Post Beetle in Puerto Rico. Puerto Rico (Mayaguez) Fed. Exp. Sta. Bul. 44. May 1948.

——— Control of Powder Post Beetle in Puerto Rico. Trop. Agr. [Trinidad] 26 (1-6): 64-67. 1949.

——— Studies of Factors Influencing Attack and Control of the Bamboo Powder Post Beetle. Puerto Rico (Mayaguez) Fed. Exp. Sta. Bul. 48. Illus. August 1950.

——— and Ferrer-Delgado, R. Permanence of DDT in Powder Post Beetle Control in Bamboo. Jour. Econ. Ent. 42: 963-965. 1949.

——— and Hageman, R. H. Starch and Other Carbohydrates in Relation to Powder Post Beetle Infestation in Freshly Harvested Bamboo. Jour. Econ. Ent. 44: 73-75. Illus. 1951.

Porterfield, W. M. Bamboo the Universal Provider. Sci. Monthly 36: 176-183. Illus. 1933.

Ramakrishna Ayyar, T. V. Handbook of Economic Entomology for South India (bamboo insects, pp. 376-377). Madras, 1940.

Rehman, M. A., and Ishaq, S. M. Seasoning and Shrinking of Bamboo. Forest Res. Inst,, Dehra Dun. Illus. Calcutta, 1947.

Rhind, D. Grasses of Burma (bamboos, pp. 1-26). Calcutta, 1945.

Riviere, A., and Riviere, C. Les Bambous. Illus. Paris, 1878.

Salcedo, Diaz R. Un Método Sencillo de Rajar Guadua. Agricultura Tropical 4: 19-22. Illus. 1948.

Shen, L. G. Studies on Physical Properties of Bamboo Timbers. Science [China] 29: 268-272. 1947.

Stebbing E. P. Manual of Elementary Forest Zoology for India. Calcutta: Supt. Govt. Printing, India, 1908.

——— Note on the Preservation of Bamboos from the Attacks of the Bamboo Beetle or "Shot-Borer." Government of India: Forest Zoology Series No. 2, Forest Pamphlet 15 (2d ed.). Illus. Calcutta, 1910.

Teodoro, A. L. A Preliminary Study of the Transverse Strength of Structural Bamboo. Agr. Engineering 6: 266-267. Illus. 1925.

Trotter, H., and Benson, C. F. C. Liability of Solid Bamboo Staves to Attack by Borers. Indian Forester 59: 709-712. 1933.

Van der Woude, C. A. A. New Building Materials in Indonesia. OSR News (monthly of Organization of Scientific Research for Indonesia) 3: 106-110. 1951.

Watt, George. Commercial Products of India. London, 1908.

White, D. G. Bamboo culture and Utilization in Puerto Rico. Federal Expt. Sta. in Puerto Rico, Cir. 29. Illus. 1949.

——— Cobin, M., and Seguinot R., Pedro. Relation Between Curing and Durability of Bambusa tuldoides. U. S. Forest Service, Caribbean Forester. 7: 253-274. Illus. 1946.

Wolcott, George N. Termite Repellents: Summary of Laboratory Tests. Puerto Rico Collecting Sta. (Río Piedras), Bul. 73. 1947.