AGENCY FOR INTERNATIONAL DEVELOPMENT
WASHINGTON, D. C. 20523

BIBLIOGRAPHIC INPUT SHEET

FOR AID USE ONLY
Batch 70

1. SUBJECT CLASSIFICATION

A. PRIMARY: Food production and nutrition — AR00-0000-0000

B. SECONDARY: Home economics

2. TITLE AND SUBTITLE
Village technology handbook,sect.6: Home improvement

3. AUTHOR(S)
(101) Volunteers for Int.Technical Assistance,Mt.Rainier,Md.

4. DOCUMENT DATE	5. NUMBER OF PAGES	6. ARC NUMBER
1970	45p.	ARC

7. REFERENCE ORGANIZATION NAME AND ADDRESS
VITA

8. SUPPLEMENTARY NOTES *(Sponsoring Organization, Publishers, Availability)*

9. ABSTRACT

10. CONTROL NUMBER
PN-AAF-663

11. PRICE OF DOCUMENT

12. DESCRIPTORS
Bedding equipment
Intermediate technology
Small machines
Soaps
Stoves
Washing machines
Water heaters

13. PROJECT NUMBER

14. CONTRACT NUMBER
CSD-2795 GTS

15. TYPE OF DOCUMENT

AID 590-1 (4-74)

PN-AAZ-663

Village Technology Handbook

SECTION 6: HOME IMPROVEMENT

FOREWORD

Progress is the result of man's mastery of the world he lives in. The VILLAGE TECHNOLOGY HANDBOOK is aimed at helping villagers to master the resources available to them: to improve their own lives and to bring their villages more fully into the lives of the nations of which they form a basic and important part.

Village development takes on special importance in the light of the fact that 80 percent of those who live in less-developed countries live in villages. If progress is to come to nations, progress must come to villages.

Technical information is a basic factor in progress, along with other basic factors: political, social and economic. The VILLAGE TECHNOLOGY HANDBOOK was conceived by VITA Volunteers in 1962 as a means of bridging the "technical information gap" which keeps the world's villages from learning from one another's experience. The book's aim is to gather in one publication information from many sources which has been found helpful in villages.

This handbook was first published by the U.S. Agency for International Development in two volumes in 1963 and 1964. In the 1970 edition, the two earlier volumes are integrated into one book, the editing has been made more uniform, some new information has been added and the illustrations have been improved. The entire handbook has been checked for accuracy by VITA Volunteer specialists. A new feature in this edition is the incorporation of information on other publications which cover in detail subjects which are discussed only briefly here. VITA plans to continue to improve the handbook in future editions to make it increasingly effective as a key to existing technology for village workers.

The information in the handbook has come from many sources. VITA hopes that criticism and new information will come from many of the same sources--and from other sources. The questionnaire on page ix was designed to stimulate this flow of criticism and information. VITA will test new information and then disseminate it to those who need it.

VITA is grateful to the U.S. Agency for International Development for its financial support of the revision and for its help in reviewing the contents. Thanks are also due to the Federal Extension Service, U.S. Department of Agriculture, for its help in reviewing the section on "Home Improvement".

A NOTE ON USING THE HANDBOOK

This handbook describes techniques and devices which can be made and used in villages. Hopefully the book will generate new ideas as well as pass on information which has already been tried.

Some of the practices suggested here can be adopted on an individual basis. Others, however, will require cooperation by many people and, perhaps, by government agencies. In many cases, it

would be well to seek out extension services existing in your area. If local government or university extension services are available, they will be able to give you information well suited to local conditions. In some cases, there may be a need for a credit union or a consumer, marketing, housing or service cooperative. Information on credit unions is available from:

CUNA International, Inc.
World Extension Department
Box 431
Madison, Wisconsin 53701
U.S.A.

Information on cooperatives is available from:

Agricultural Cooperative Development International
Suite 1200
1430 K St., N.W.
Washington, D.C. 20005
U.S.A.

When the materials suggested in the handbook are not available, it may be possible to substitute other materials; but be careful to make any changes in dimensions made necessary by such substitutions.

Dimensions are given in metric units in the text, with English units in parentheses. Only metric units are given in the illustrations. Conversion tables are given in the Appendix.

Reference materials, along with information on where they can be obtained, are listed at the end of a specific entry when they pertain to that entry. When they refer more generally to the field covered in a section of the book, they are given at the end of the section. If you cannot get these publications, VITA may be able to help you.

If you want to use translations of material in the handbook, we ask you to let VITA know. The material you want may already be translated; if it is not, and if you translate it, VITA would like to make your translation available to others.

If you have questions on the material presented here, if you run into problems in implementing the handbook's suggestions, or if you have other technical problems, do not hesitate to ask for the personal help of a VITA Volunteer specialist. Write to:

VITA
3706 Rhode Island Avenue
Mt. Rainier, Md. 20822
U.S.A.

VITA's Volunteer Translation Service can translate letters in languages other than English, but correspondence moves much more quickly when carried on entirely in English. To help VITA Volunteers find a useful solution to your problem as quickly as possible, you should:

1. Be quantitative--give measurements, sketches or, when possible, photos.

2. Explain what materials are available and what limitations there are on cost.

3. Describe the best solution, if any, found so far in the area.

4. Explain any pertinent social or cultural conditions.

5. Indicate a deadline for action, especially if immediate attention is needed.

6. Don't expect miracles on the first reply. Successful problem-solving often takes a number of letters back and forth.

WHAT IS VITA?

VITA (Volunteers in Technical Assistance) was established in 1959 as a private, non-profit organization responding to requests for assistance in economic and social development. VITA mobilizes and coordinates the work of over 7,000 volunteer professionals representing 96 countries, 2000 corporations, universities, and other institutions. The VITA talent bank represents know-how in commerce and industry, agriculture and education, engineering and public health, in addition to many other fields.

VITA provides the most appropriate knowledge to specific calls for assistance from individuals, organizations, small businesses and self-help development groups. In its brief history VITA has responded to over 25,000 requests. VITA meets people's needs through the mail, by telephone, and by on-site counselling. Requests have come from village councils, community development volunteers, farmers, small business owners, and from members of national and international public and private institutions. VITA's unique method matches people with need and people with knowledge to give. This partnership increases the opportunity for the success of the requester's project.

One of the most effective ways that VITA shares its information with many people in through its Publications Program. The VILLAGE TECHNOLOGY HANDBOOK has played an important role in helping to disseminate that information. Supplementing this book is VITA's Technology Manual series, how-to-do-it booklets, which cover a wide spectrum of subject matter. A publications list is available on request.

In its OVERSEAS LIAISON PROGRAM, VITA encourages the formation of similar technical assistance programs throughout the world. Cooperation with these and other organizations working in the developing countries will give VITA access to on-the-spot background information on the technological aspects of international development.

VITA is financed by contributions from private individuals, foundations and industry, and by government grants.

SYMBOLS AND ABBREVIATIONS USED IN THIS BOOK

@ . . . . at
" . . . . inch
' . . . . foot
C . . . . degrees Celsius (Centigrade)
cc . . . cubic centimeter
cm . . . centimeter
cm/sec . centimeters per second
d or dia. diameter
F . . . . degrees Fahrenheit
gm . . . gram
gpm . . . gallons per minute
HP . . . horsepower
kg . . . kilogram
km . . . kilometer
l . . . . liter
lpm . . . liters per minute
l/sec . . liters per second
m . . . . meter
ml . . . milliliters
mm . . . millimeters
m/m . . . meters per minute
m/sec . . meters per second
ppm . . . parts per million
R . . . . radius

QUESTIONNAIRE

NOTE TO THE READER: VITA's publications are compiled by VITA Volunteers because they want to help people in developing areas. With your field experience, you are in a unique position of being able to increase the usefulness of this work by sharing what you have learned with the people who will use the publications in the future. You are strongly urged to complete the following questionnaire (using additional sheets if necessary), cut it out and send it to:

VITA
3706 Rhode Island Avenue
Mt. Rainier, Md. 20822
U.S.A.

Date _____

Name _____ Agency _____

Address _____

_____

1. Which items from the VILLAGE TECHNOLOGY HANDBOOK have you put into practice?

2. Have results been good or otherwise?

3. Have you made improvements or modifications in any of the devices or techniques? If so, please describe them, including photographs or sketches if possible.

4. Have you devised any new equipment or techniques not described in the handbook which may be of use to others? If so, please describe them.

5. Did you find the handbook useful, too simple, too complex, incomplete?

6. Other comments and suggestions:

TABLE OF CONTENTS

Forward v
A Note on Using the Handbook v
What is VITA? vii
Symbols and Abbreviations Used in This Book viii
Questionnaire ix

SECTION 1: WATER RESOURCES 1

Part 1: Developing Water Sources 3
- Getting Ground Water from Wells and Springs
- Tubewells
- Dry Bucket Well Drilling
- Driving Wells
- Dug Wells

Part 2: Water Lifting and Transport 63
- Water Transport
- Water Lifting
- Pumps

Part 3: Water Storage and Water Power 107
- Spring Development
- Cisterns
- Selecting a Damsite
- Reciprocating Wire Power Transmission

Part 4: Water Purification 123
- Boiler for Drinking Water
- Chlorination for Polluted Water and Super-Chlorination of Wells, Spring Encasements and Cisterns
- Water Purification Plant
- Sand Filter

SECTION 2: HEALTH AND SANITATION 145

Part 1: Sanitary Latrines
Part 2: Bilharziasis

SECTION 3: AGRICULTURE 183

Part 1: Earth Moving Devices for Irrigation and Road-Building
Part 2: Irrigation
Part 3: Poultry Raising
Part 4: Silage for Dairy Cows

SECTION 4: FOOD PROCESSING AND PRESERVATION 255

Part 1: Storing Food at Home
Part 2: Storing Vegetables and Fruits for Winter Use
Part 3: How to Salt Fish

SECTION 5: CONSTRUCTION 283

Part 1: Concrete Construction
Part 2: Bamboo Construction
Part 3: Glues

SECTION 6: HOME IMPROVEMENT 319

Solar Water Heater
Washing Machines
Cookers and Stoves
Home Soap Making
Bedding

SECTION 7: CRAFTS AND VILLAGE INDUSTRY 353

SECTION 8: COMMUNICATIONS 365

Part 1: Bamboo or Reed Writing Pens
Part 2: Silk Screening
Part 3: Inexpensive Rubber Cement

APPENDIX

Temperature Conversion 377
Length Conversion
Weight Conversion
Conversion Tables

SOLAR WATER HEATER

As the sun heats the water in this solar water heater, the hot water circulates to the top of the storage tank, and cool water from the bottom of the tank moves into the heater. The heater was designed to supply hot water for a hand-operated washing machine.

This solar water heater was built and tested in Kabul, Afghanistan, in 1961. Three sizes were tested: 75cm x 135cm (29 1/2" x 53 1/8"), 90cm x 180cm (35 7/16" x 70 7/8") and 90cm x 240cm (35 7/16" x 94 1/2"), which were the sheet-metal sizes available in Kabul. Considering the cost of materials and the amount of water needed, the 90cm x 180cm (35 7/16" x 70 7/8") size was best: 70 liters (74 quarts) of water were heated to 60C (140F) between sunrise and noon on a clear summer day with a temperature of about 32C (90F).

Tools and Materials

Galvanized sheet metal: 2 pieces, 90cm x 180cm (35 7/16" x 70 7/8") (for heater).

Galvanized sheet metal pipe: 2 pieces, 5cm (2") long and 2.5cm (1") in diameter (for connectors).

Rubber hose: 2 pieces, 120cm (47 1/4") long and 2.5cm (1") in diameter.

Galvanized stove bolts: 28, 0.65cm (1/4") in diameter and 2.5cm (1") long.

Metal washers for 0.65cm (1/4") bolts: 56.

Rubber washers for 0.65cm (1/4") bolts: These can be cut from heavy truck inner tubes: inside diameter, 0.35cm (1/8"); outside diameter, 2cm (3/4").

Galvanized sheet metal tank: 70-liter (74-quart) capacity, with faucet, removable lid, and 2.5cm (1") hose connectors one near the top and one near the bottom.

Tinsmith's tools: hammers, anvils, soldering equipment, tinsnips.

Drill and 0.65cm (1/4") bit

Screw driver

Pliers or 0.65cm (1/4") wrench

Flat black paint

Quantity of mud bricks

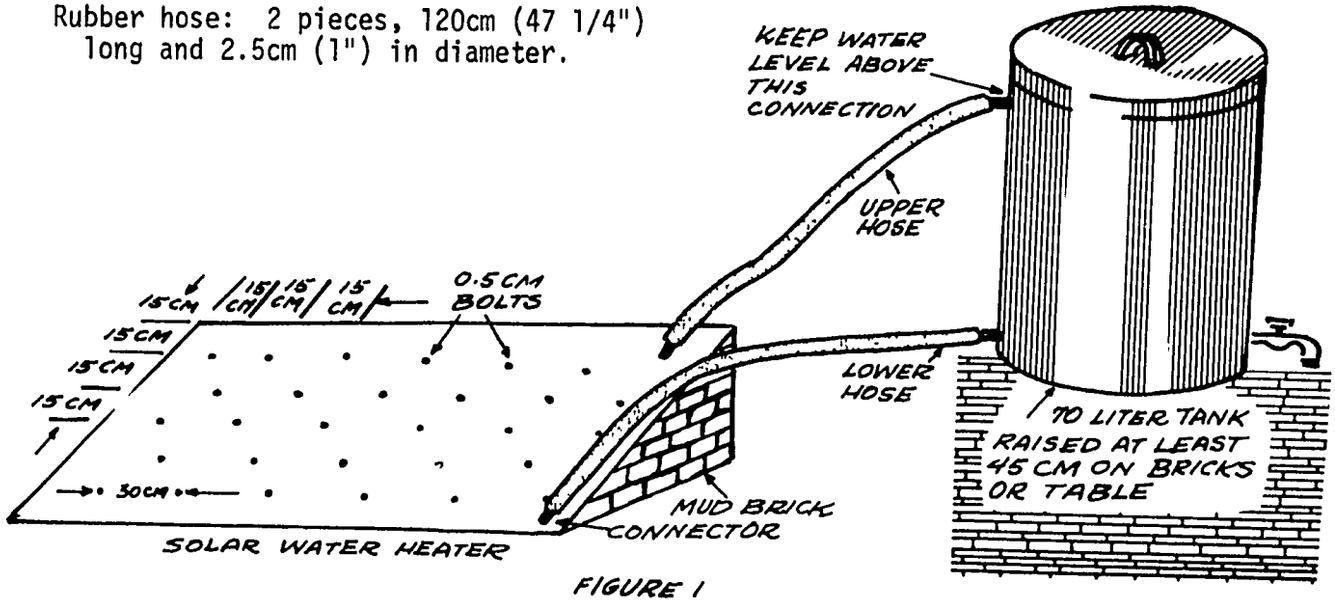

FIGURE 1

Making the Heater

To make this solar water heater, cut 2cm (3/4") off the length and 2cm (3/4") off the width of one of the sheets of galvanized steel, so that it will be 1cm (3/8") smaller than the other sheet on all four sides. Place the two sheets together. Using a hammer and anvil, fold the 1cm (3/8") overlapping edges. Then fold the edges again and solder them to make an airtight seal (see Figure 2). To keep the sheets from being forced apart when the heater is filled with water, they are held together by 0.5cm (3/16") bolts placed at regular intervals, like buttons in a mattress. Place rubber and metal washers at each end of the bolts (see Figure 3) to make the heater watertight. Inlet and outlet connections are installed at the upper and lower right hand corners of the front of the heater to connect the heater with the storage tank (see Figure 4).

Paint the front of the heater black so that it will absorb the sunlight rather than reflect it. Flat black paint is better than enamel.

The storage tank should hold about 70 liters (74 quarts). One piece of hose is used to connect the upper connectors of the tank and the heater; the other is used to connect the lower connectors. Using a small table or a brick platform, raise the tank about 45cm (17 3/4") off the ground so that the coolest water will be in the heater.

Many materials, such as mud, straw or sawdust, can be used to insulate the tank to cut down on heat loss.

The heater should be set up to face the sun. Raise the top of the heater about 45cm (17 3/4") so that the sunlight will strike the black surface as directly as possible. A simple way to raise the heater is to build up the back and the sloping sides with mud brick (see Figure 1). Prop up the back with small boards while the bricks are being laid. When the bricks are laid, remove the boards and seal any holes with mud. This will form a dead air space which will serve as insulation.

The hot water will rise to the top of the tank. When all of the water is to be used, it can be drained from the faucet. When only a small amount of water is needed, the hottest water can be taken from the top of the tank. Whenever water is being heated, the water level should be kept above the tank's upper hose connection to allow the water to circulate.

Source:

Dale Fritz, VITA Volunteer,
Washington, D.C.

EDGE FOLD

FIGURE 2

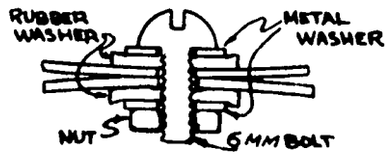

BOLT AND WASHERS

FIGURE 3

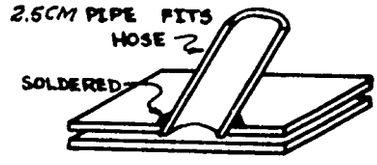

CONNECTOR

FIGURE 4

SIMPLE HAND-OPERATED WASHING MACHINE

This hand-operated washer, which is simple for a tinsmith to build, simplifies washing.

The washing machine has been used successfully in Afghanistan.

Tools and Materials

Tinsnips

Pliers

Hammer

Soldering Equipment

Heavy galvanized sheet metal:

140cm x 70cm (55 1/8" x 27 9/16") for tub
100cm x 50cm (39 3/8" x 19 11/16") for lid and bottom
36cm x 18cm (14 3/16" x 7 1/16") for agitator

Wooden handle 140cm (55 1/8") long, about 4cm (1 1/2") in diameter

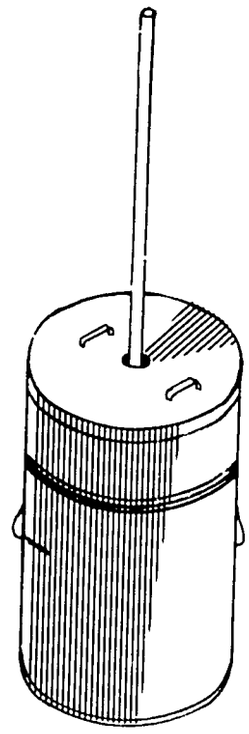

FIGURE 1

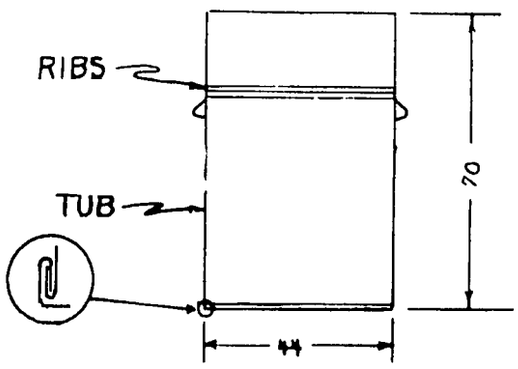

DIMENSIONS IN CM.

FIGURE 2

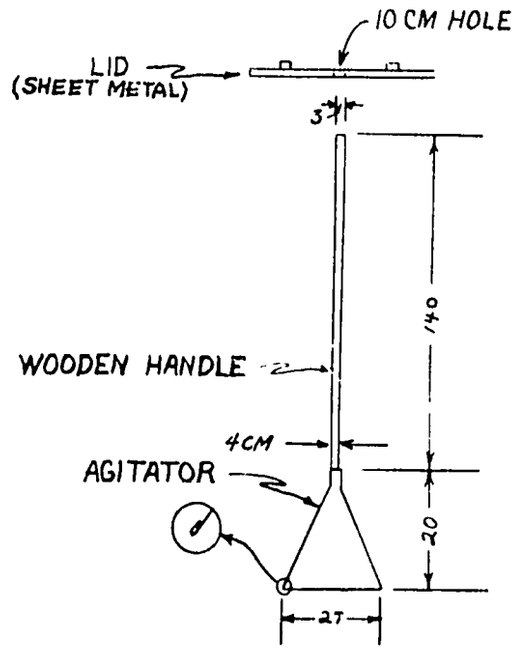

FIGURE 3

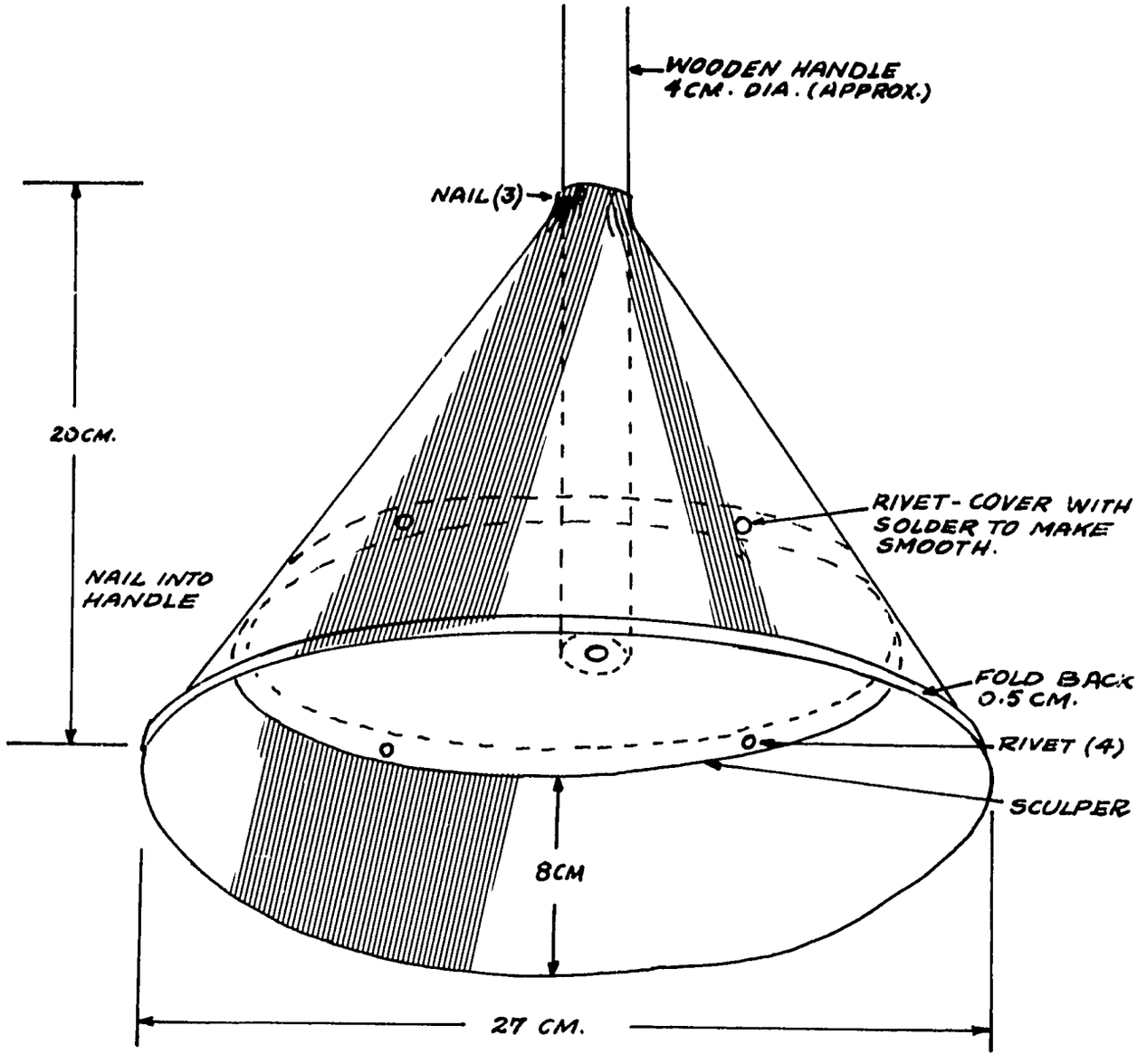

FIGURE 4

Making the Washing Machine

Figures 1 to 4 show how this washing machine is made. The tub, lid and agitator are made of heavy galvanized sheet metal.

Using the Washing Machine

To operate the washing machine, work the agitator up and down with a quick motion but with a slight pause between strokes. The movement of the water caused by the agitator will continue for a few seconds before additional agitation is needed. On the upward stroke the agitator should come completely out of the water. The agitator should not hit the bottom of the tub on the downward stroke because this would damage both the tub and the clothes.

Source:

Dale Fritz, VITA Volunteer, Washington, D.C.

HAND-OPERATED WASHING MACHINE

This easily-operated washing machine can be built by a good carpenter from materials easily found in most countries. It is easy on clothes, effective and sanitary. The machine, which can take 3-kilogram (6-pound) load of clothes, can be shared by several families.

Clothes will last much longer if they are washed in this washing machine rather than beaten or scrubbed on rocks. Washing with the machine is also much less work. A pilot model of the machine was made by the U.S. Department of Agriculture and tested in the U.S.D.A. Home Economics Laboratory, Beltsville, Maryland. Under test conditions, a comparison with standard electric commercial washers was very favorable. If the cost of the machine is too much for one family, it can be used by several. However, if there are too many users, competition for times of use will become keen and the machine will wear faster.

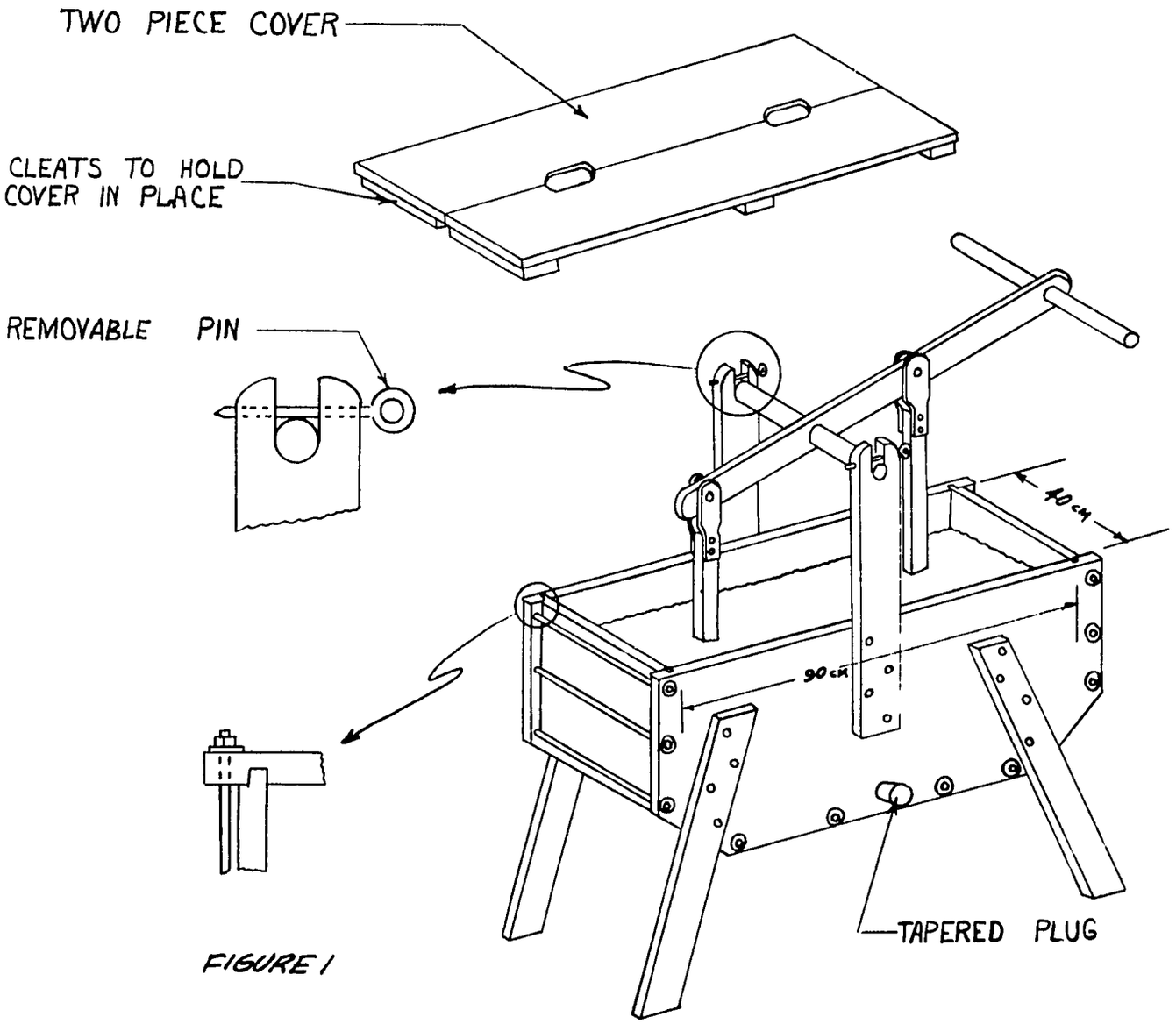

FIGURE 1

Tools and Materials

Tub Construction - Moderately firm softwood (such as cedro of Latin America) free from large heartwood growth.

Sides - 2 pieces - 2.5 x 45.7 x 96.5cm
1" x 18" x 38"

Ends - 2 pieces - 2.5 x 30.5 x 40.6cm
1" x 12" x 16"

Bottom - 2 pieces - 2.5 x 15.2 x 40.6cm
1" x 6" x 16"

Bottom - 1 piece - 2.5 x 40.6 x 66.0cm
1" x 16" x 26"

Legs - 4 pieces - 2.5 x 10.2 x 76.2cm
1" x 4" x 30"

Round Plungers -

2 pieces - 2.5 x 25.4cm diameter
1" x 10" diameter

2 pieces - 3.8 x 12.7cm diameter
1.5" x 5" diameter

Cover (may be omitted)

2 pieces - 2.5 x 20.3 x 91.4cm
1" x 8" x 36"

6 pieces - 2.5 x 7.6 x 20.3cm
1" x 3" x 8"

Operating parts - Moderately firm hardwood such as Caoba of South America.

Lever

1 piece - 2.5 x 7.6 x 122cm long
1" x 3" x 48"

Plunger stems

2 pieces - 2.9cm square 38.1cm long
1 1/8" square 15" long

Uprights

2 pieces - 2.9 x 7.6 x 61.0cm long
1 1/8" x 3" x 24" long

Pivot and Handle

2 pieces - 3.2cm diameter x 45.7cm long
1 1/4" diameter x 18" long

Metal Parts

Plunger connections -

4 pieces iron or brass plate -
.64 x 3.8 x 15.2cm long
1/4" x 1 1/2" x 6" long

10 rods - 3.6 or .79cm diameter
1.4" or 5/16" diameter

45.7cm (18") long with threads and nuts on each end - iron or brass.

20 washers about 2.5cm (1") diameter with hole to fit rods.

1 rod - .64 x 15.2cm (1/4" x 6") with loop end for retaining pivot.

6 bolts - .64 x 5.1cm long (1/4" x 2" long)

24 screws - 4.4cm x #10 - flat head (1 3/4" x #10)

50 nails - 6.35cm (2 1/2")

Strip Sheet Metal with turned edge - 6.4cm wide, 152.4cm long (2 1/2" wide, 72" long)

Small quantity of loose cotton or soft vegetable fiber for caulking seams.

FIGURE 2

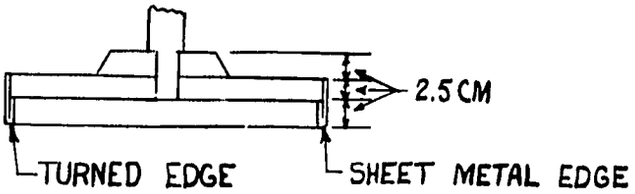

PLUNGER SECTION

FIGURE 3

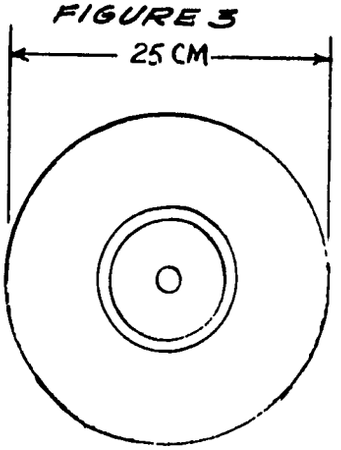

TOP VIEW OF PLUNGER

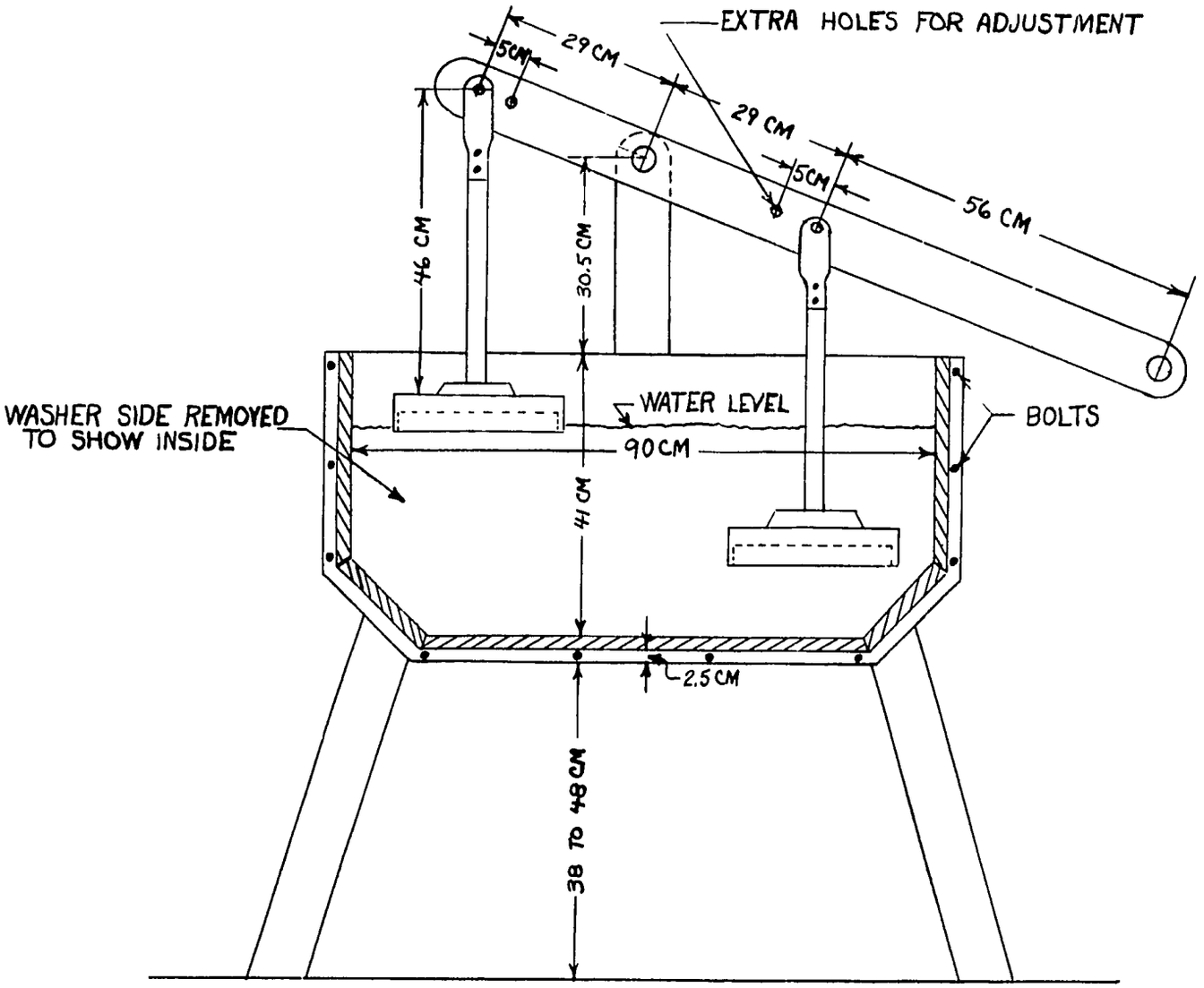

FIGURE 4

Minimum Tools Needed

Tape measure or ruler

Hammer

Saw

Wood chisel 1.3 or 1.9cm wide
1/2" or 3/4"

Screw Driver

Pliers

Adjustable Wrench

0.64cm (1/4") drill, gimlet or similar tool

Draw knife or plane and coping saw

The machine reverses the principle used in the usual commercial washer, in which the clothes are swished through the water for various degrees of a circle until the water is moving, and then reversed. In this machine, the clothes stay more or less stationary while water is forced back and forth through the clothes by the piston action of the plungers. One plunger creates suction as it rises and the other plunger creates pressure as it moves downward. The slopes at the ends of the tub bottom help the churning action of the water caused by the plungers (see Figure 1).

A rectangular tub is best for this method of operation. This is fortunate since the rectangular box is easy to build. In general, any moderately strong wood that will not warp excessively (such as cedro in Latin America) will be satisfactory. The sides should be grooved for the ends and bottom of the tub as indicated in Figure 1 and bolted with threaded rods extending through both sides with washers to draw them tight. The bolting is necessary to prevent leaks.

The size described in the drawings is large enough for an average family in the U.S. The same principle may be used for a larger or smaller machine provided the basic proportions are maintained. The tub should be slightly less than half as wide as it is long to get a proper surge of water. The pistons should be wide enough to move within a couple of inches of each side of the tub. The lever pivot should be high enough to permit the plungers to move up and down several inches without the edge of the lever hitting the edge of the tub. Likewise, the length of the rods on the plungers must be such that the plungers go well into the water and the clothes come completely out of the water at the highest position.

Mark and groove sides for end and bottom members (see Figures 1 and 4).

Drill holes for cross bolts.

Cut off corners and trim ends of side members to length.

Bevel ends and bottom pieces to fit into groove in side members.

Miter bottom and end members together.

Assemble and bolt.

Cut and install legs.

Caulk seams between ends and bottom members with loose cotton or other vegetable fiber to make seams water-tight. If joints to side members are carefully made, they may not need caulking.

Bore hole and make plug for draining tub. NOTE: This is shown on side in drawing but it is better in bottom of tub.

Make and install upright pivot members.

Make and install plunger lever. NOTE: the cross pivot member (round) should be shouldered or notched at each pivot to prevent side movement.

Make plungers and install (see Figures 2,3 and 4).

Here are several suggestions for using this washing machine: Fill the washer with fifteen gallons of warm or hot water depending on what is available. Remove stains. Rub soap into the areas of garments like cuffs and collars which come in close contact with the body. Soak very dirty clothes before putting them in the washer. Soap can be dissolved by shaving it into strips and then heating it in a small quantity of water before a adding it to the wash water. A three kilogram load of clothes is the right size load for best cleaning. Wash at a moderate speed, about fifty strokes a minute, for ten minutes -- longer if it seems necessary. After washing and rinsing the clothes, rinse the washer clean and then replace the stopper. To keep the wood from drying out and causing the tub to leak, put about 3cm of water in the washer when it is not in use.

Source:

"How to Make a Washing Machine," by V.C. Pettit and Dr. K. Holtzclaw, A.I.D.

FIRELESS COOKER

Where fuel is scarce, this easy-to-build fireless cooker can be a contribution to better cooking. It keeps food cooking with a small amount of heat stored in hot stones; loss of heat is prevented by a thick layer of insulating material around the pot.

Fireless cookers have been successfully used in many countries. Once the principle of operation, heat retention through insulation, is understood, the reader may develop plans which are better suited to his locale than those described here. In some countries, fireless cookers are built into the ground. In others, they are built from surplus tin cans, one can fitted into another tin can or box but separated by paper, sawdust or other layers of insulation.

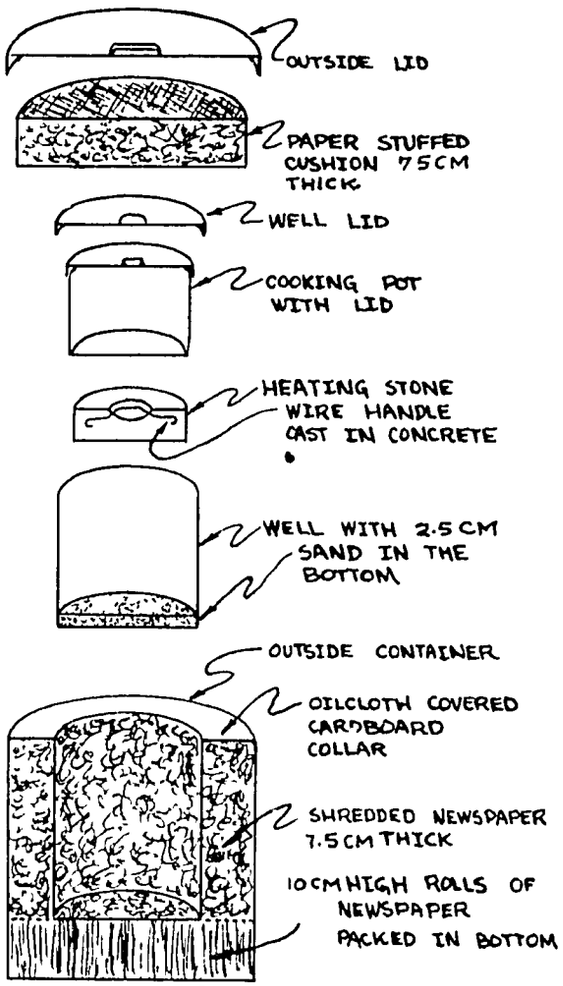

FIGURE 1

Materials

Outside container with lid - 37.5cm to 60cm (15" to 24") in diameter

Inside container or well - at least 15cm (6") smaller in diameter and 15cm (6") shorter than outside container

Cooking pot with lid

Cloth for cushion: 1.2 square meters (1 1/2 square yards)

50 sheets newspaper or other insulation.

Cardboard

Sand: .95 liter (4 cups)

Cement: .95 liter (4 cups)

Oilcloth for collar (optional): 0.4 square meters (1/2 square yard).

The outside container can be a wooden bucket, kerosene can, garbage can, packing crate or even a hole in dry ground. The inside container or well can be a pail or can with a lid. It must allow for 7.5cm (3") of insulation between it and the outside container and should hold the stone and cooking pot without much vacant space.

Insulation can be made of shredded newspapers, wool, cotton, sawdust, straw, rockwool, fiberglass or other material. The insulation should be at least 7.5cm (3") thick on all sides, top and bottom. Be sure that it is very dry. The bottom layer of insulation must be strong enough to support the weight of the well, stone and cooking pot. A natural stone carved

to shape or a piece of concrete may be used for the heating stone. The cushion is a cloth sack, 7.5cm (3") thick, filled with shredded newspapers or other insulation. It should fit snugly in the outside container. The cooking pot must have a tight lid, and fit nicely into the well when the stone is in place. Be sure it can be easily removed when full of hot food.

How to Make the Fireless Cooker (See g-Figure 1)

Wash and dry the containers and lids.

Cut 10cm - wide strips of newspaper several layers thick. Roll each into a cylinder with a center hole no greater in diameter than a pencil. Pack these on end into the botcom of the outside container. They will support the well, stone, and cooking pot.

Put the well in place and pack the insulation around it to within 1cm (1/2") of the top.

Make a cardboard collar covered with oilcloth. Though this is not necessary, it improves appearance and cleanliness.

Place about 2.5cm (1") of clean sand in the bottom of the well. This will prevent the hot stone from scorching the paper rolls and possibly causing a fire.

To make a concrete heating stone, place a 5cm-wide cardboard band or collar on heavy paper or board to form a circle the size of the stone desired. Mix .95 liter (4 cups) each of cement and sand (the sand should first be washed free of silt); then mix in enough water (about .35 liter or 1 1/2 cups) to form a stiff mush. Fill the collar, casting in a wire handle for lifting the hot stone. Let the stone stand for 48 hours, then remove the collar, place it in cold water and boil for 30 minutes. Cool it slowly.

Using the Fireless Cooker

It is important to keep the cooking pot and well carefully washed and open, in the sunshine if possible, when not in use. The cooker's lid should be left partly open and the stone kept clean and dry.

It is not necessary to use much water when cooking in a fireless cooker for there is little loss by evaporation. Most foods should be brought to a boil and cooked for 4 to 5 minutes on anothe stove. The heating stone is heated and placed in the cooker. Then the covered cooking pot is set on the hot stone in the cooker and the lid is placed on the well. Cereal may be left in the cooker all night. Rice and cracked or whole wheat are especially good. Beans shoul be soaked over night, boiled for 5 minutes and then placed in the cooker for 4 to 5 hours. Dried fruit should be washed, soaked for an hour in 2 parts water to 1 part fruit, boiled for 5 minutes, then placed in the cooker for 4 hours.

Source:

Home Making Around the World, U.S. Department of State, Agency for International Development, reprinted 1963.

CHARCOAL OVEN

This simple charcoal-fired oven is made from two 5-gallon oil tin cans. With practice, all types of baking and roasting can be done effectively.

This oven is being used successfully in a number of countries.

Tools and Materials

Tin snips

Heavy knife

Nail for scriber and punch

Hammer

Screwdriver

Pliers

Bricks and sand

Metal bar, 20cm (7 5/8") long with square edge for bending tin

5-gallon cans (2)

Tin (for shelf, top strip & latch)

Light rod, 50cm (19 5/8") long

Light hinges with bolts (2 pairs)

Stove bolts, 5mm x 13mm (3/16" x 1/2") (15)

How to Build the Charcoal Oven

Mark the two 5-gallon cans for cutting (see Figure 2), making sure that the second can is marked the reverse of the first. Do not cut the corner which has a vertical seam: Besides being hard to cut, the seam will strengthen the oven. The material removed will be easier to make into doors if it is seamless.

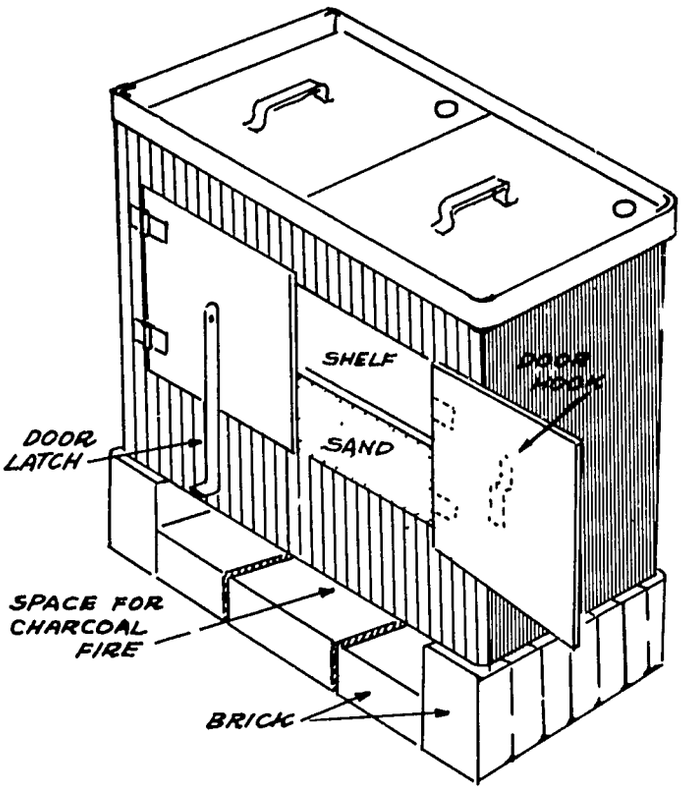

FIGURE 1 THIS LOW-COST CHARCOAL OVEN CAN BE USED FOR ALL KINDS OF BAKING AND ROASTING.

Cut along the marks with a heavy knife, keeping the cut-out sections as undamaged as possible. Fold the edges of the oven-door openings back 1cm (3/8") (see Figure 2).

With the nail, punch 5mm (3/16") holes around the opening in the side of the can to be used for the left hand section of the oven (see Figure 2). Place the second can against the one just punched and mark the holes with the nail. Punch holes in the second can. Bolt the cans together, using 10 stove bolts.

Flatten sections cut from cans and mark for doors (see Figure 3). Using the tin snips, cut doors to size and

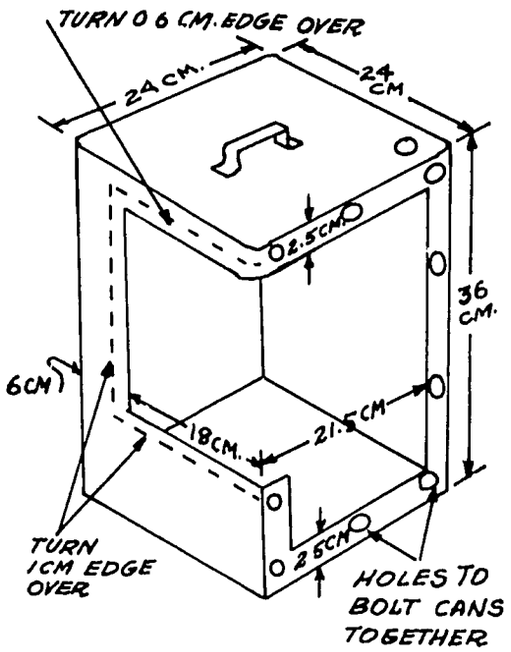

FIGURE 2 CUT ONE 5-GALLON CAN AS SHOWN ABOVE. THE OTHER CAN IS CUT THE REVERSE OF THE ONE HERE.

fold back the 1cm (3/8") edge (see Figure 4). Position doors as shown in Figure 1, butting the edge of each door against the edge of the opening to which it will be attached. Install hinges.

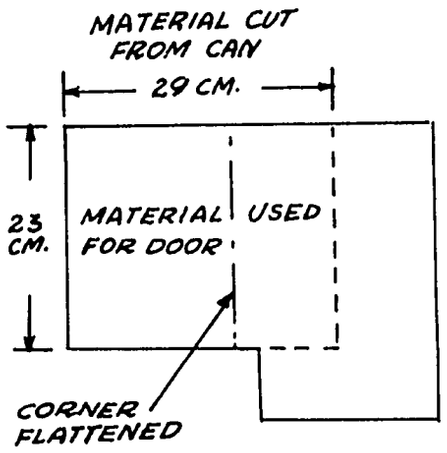

FIGURE 3. FLATTENING AND CUTTING DOORS FROM CUT-OUT SECTIONS OF CANS.

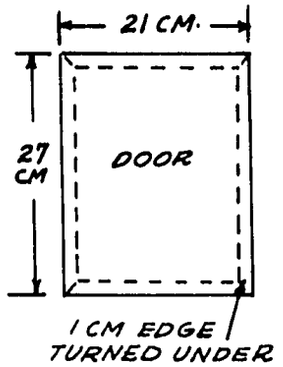

FIGURE 4. FOLDING BACK THE EDGES OF THE DOORS.

The door latch (see Figure 1) is made by folding a 6cm x 38cm (2 3/8" x 15") strip three times lengthwise, forming a piece 2cm (3/4") wide. 8cm (3 1/4") is cut from the end of the folded strip to form a hook--which is then bolted (use 2 bolts) to the center of the door on the right. The 30cm (11 3/4") piece is bolted loosely to the center of the door on the left. The unattached end is bent up to form a handle.

A triangular-shaped hole at the top of the doors where the two cans come together must be plugged to keep heat from escaping. This can be done by shaping a small piece of tin to fit the opening, with a tail which is inserted between the joined cans to hold it in place.

Construct shelf as shown in Figure 5 and install (see Figure 1). The shelf should be bolted in place 15cm (5 7/8") from the floor of the oven (see Figure 5).

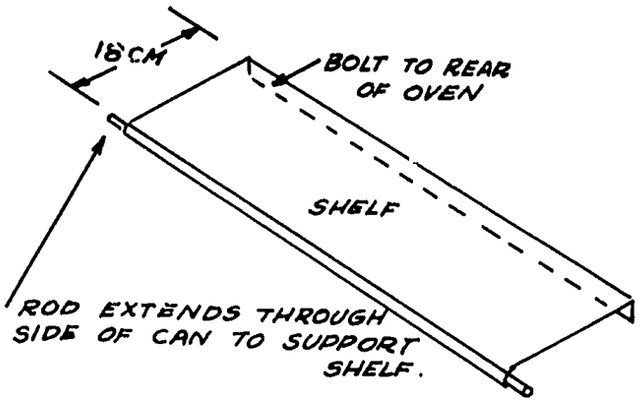

FIGURE 5. BUILDING A SHELF.

The oven should be cleaned thoroughly and heated at least once before use to burn out any remaining oil in the cans.

How to Use the Charcoal Oven

Place 1cm (3/8") of sand in the bottom of the oven and place the oven on bricks as in Figure 1. The oven can be removed until the charcoal starts to burn, then put in place.

A little time is required before the proper temperature is reached because the sand must first absorb and dissipate the heat. For very high baking temperatures, or to brown the top surface of baked goods, additional pieces of charcoal can be placed on top of the oven. An extra rim can be added to the top edge of cans for this purpose (see Figure 1).

Sources:

V.C. Pettit, U.S. Agency for International Development

Dale Fritz, VITA Volunteer, Washington, D.C.

SMOKELESS COOKING STOVE

This smokeless cooking stove can be built completely from local materials. The stove will burn wood, charcoal or cowdung without smoking. It may be necessary to build several stoves before finding the best method.

The smokeless stove can be built outside the house and moved into the kitchen after it dries.

The stove is made from a compact block of clay 75cm x 75cm and 25cm high (30" x 30" x 10"). To make the block: mix 5 to 10 baskets of clay to each basket of straw cuttings; mix enough water with this material to make it easy to work. At this point, some stove-makers add 10 percent of fresh cowdung and leave the mixture in the shade for a week, keeping it wet, to help the stove dry hard and strong. After kneading the clay into a homogeneous paste, make the block. To keep the block from sticking to the ground, sand or ashes can be spread where the stove is to be made.

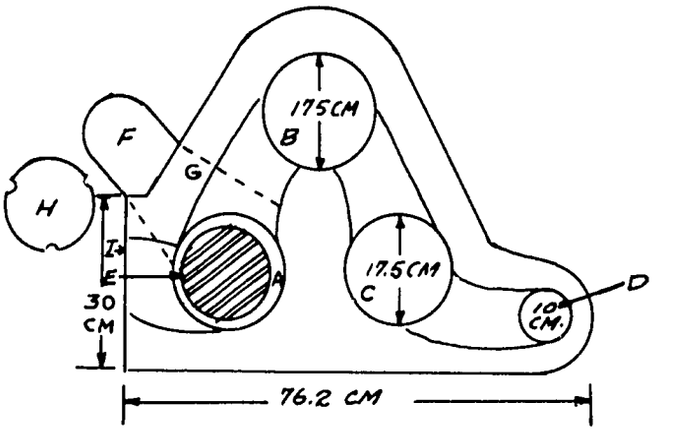

A,B,C. POT SEATS
D CHIMNEY BASE
E. GRATING
F ASH REMOVING PIT AND ADDITIONAL AIR VENT.
G DAMPER THROUGH CHOOLA WALL
H CHARCOAL STOVE ON FLOOR LEVEL FOR ROTI BAKING.
I FUEL ENTRANCE

FIGURE 2. TOP PLAN OF THE SMOKELESS STOVE.

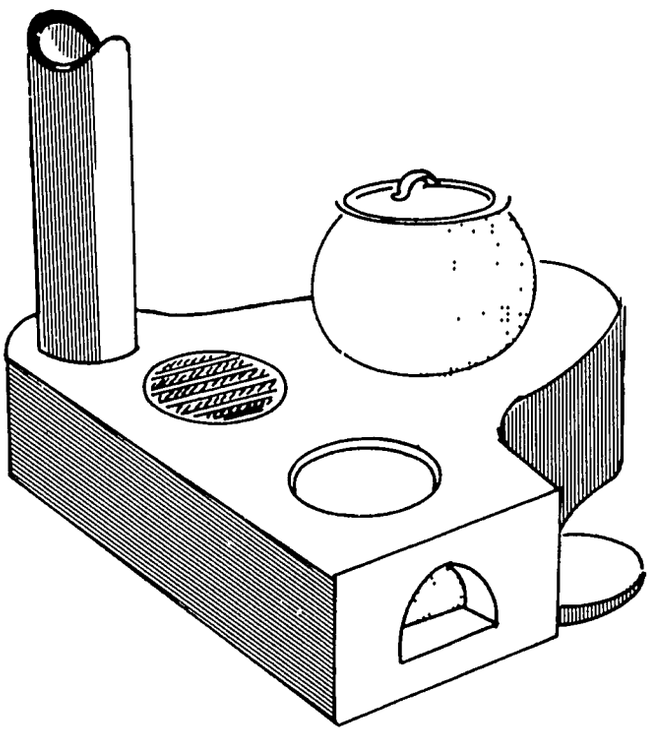

FIGURE 1. THIS SMOKELESS COOKING STOVE CAN BE BUILT COMPLETELY FROM LOCAL MATERIALS.

Use a compass (made with two sharpened sticks joined by string) and ruler to design the stove on the clay block (see Figure 3). The sizes of the three pot holes and the distances between them depend on the sizes of the pots to be used, especially if there are no iron rings to make the holes smaller. With a knife and trowel, carefully hollow out the clay slab as shown in Figures 2, 3, 4, 5 and 6. Do not undercut the bridges between the top holes. The roof of the passages, however, should not be thicker than 2.5cm (1") so that the stream of hot air will hit the pots (see Figures 2 and 7).

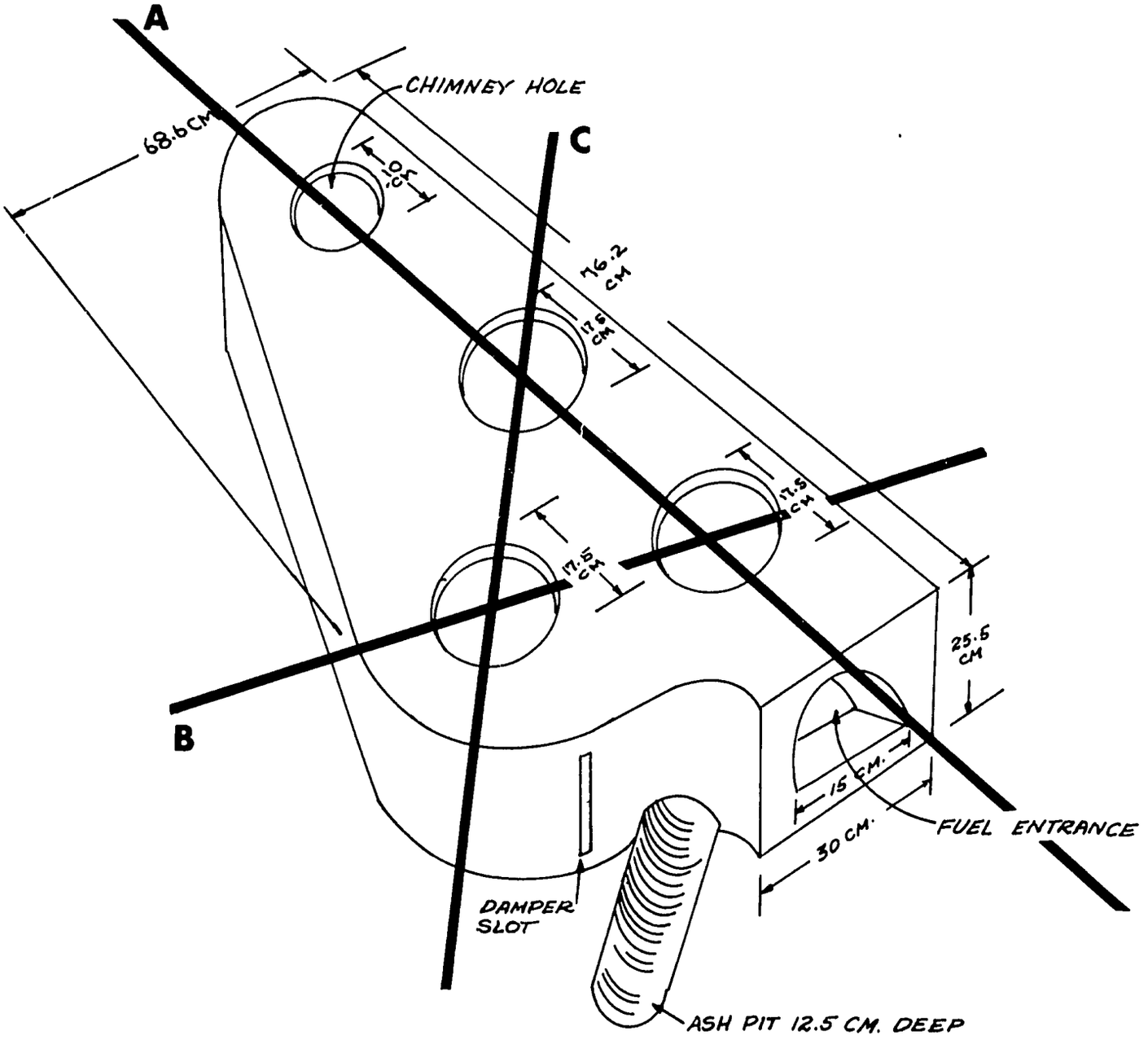

FIGURE 3. DIMENSIONS OF THE SMOKELESS STOVE.

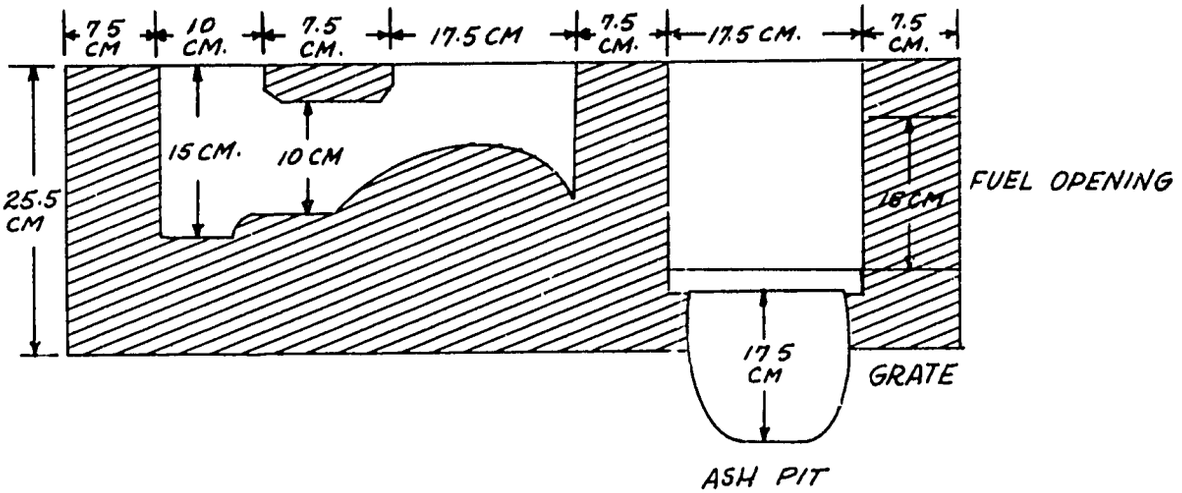

FIGURE 4 VIEW ALONG LINE A OF FIGURE 3.

Tools and Materials

Clay

Straw cuttings

Chimney tile: 10cm (4") in diameter

*Iron rings

*Small grate: 18cm x 18cm (7" x 7"), or a series of 18cm iron rods.

*Sheet metal: 20cm x 35cm (8" x 14")

String

Trowel

Knife

Ruler

*These items will improve the stove but they are not absolutely necessary.

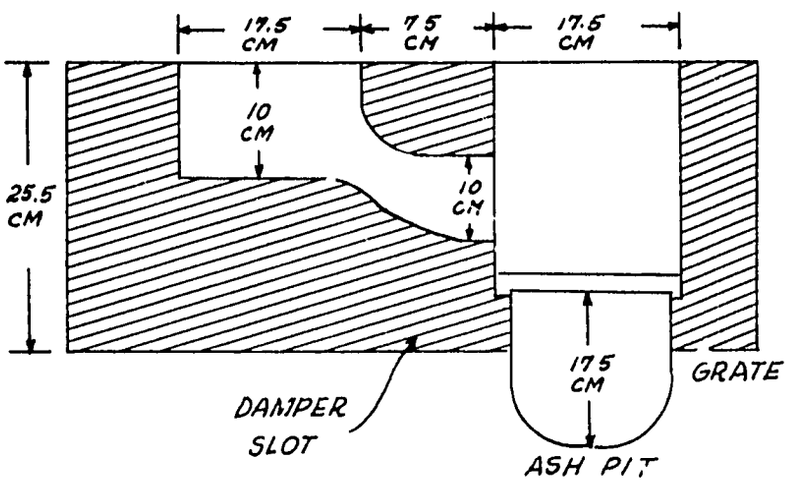

FIGURE 5. VIEW ALONG LINE B OF FIGURE 3.

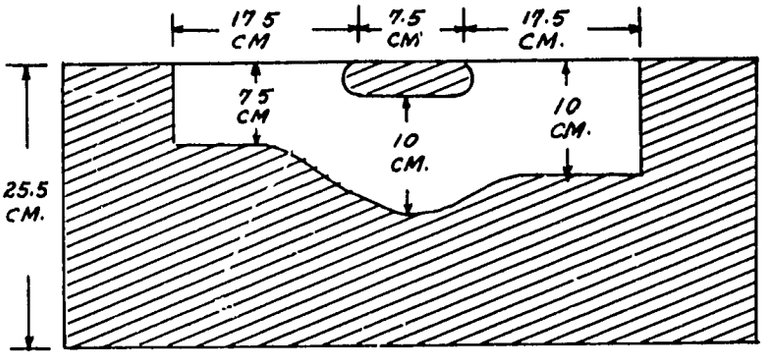

FIGURE 6 VIEW ALONG LINE C OF FIGURE 3.

After digging out the passage to the ash pit (see Figures 2, 3 and 4), put the small grill through the pot hole nearest the fuel entrance and install it in place under the hole to separate the fire area from the passage to the ash pit. This may be difficult with some grates: a narrow slot to hold the grate may be needed in the side of the passage under the pot hole away from the third hole.

Cut a slit in the side of the stove for a damper (see Figure 3). Work in the 20cm x 35cm piece of sheet metal, which serves as the damper, forming grooves. Again, be careful not to undercut the top side of the stove.

Press a round-bottomed pot in each hole and turn it so that it sits firmly in the hole. A close fit will stop the smoke from coming up around the pots when the stove is in use.

Place covers (vessels or flat stones) over the three pot holes. Start a fire in the stove to bake it until it is dry. Use wet clay to cover any cracks which show while the stove is drying.

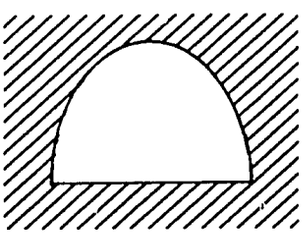

FIGURE 7

Dig an ash pit in the kitchen floor (see Figures 2, 3 and 4) and put the stove in place. Now build the chimney tiles over the chimney hole and up through the roof. Plaster all joints carefully with clay. If the climate is windy or wet, the top of the chimney must be covered.

Always cover the openings with vessels or flat stones.

Adjust the damper to the position at which the fuel burns best.

Use iron rings, if they are available, so the pot holes can hold smaller vessels.

Whenever cracks appear, cover them with wet clay.

Remove soot periodically.

Sources:

"Magan Choola (Smokeless Cooking Oven)," Gandhiniketan Ashram, T. Kalluppatti, Madurai District, India, 1955.

"Smokeless Kitchens for the Millions," by S.P. Raju. The Christian Literature Society, Post Box 501, Park Town, Madras 3, India, 1966.

OUTDOOR OVEN

An outdoor oven is easy to build and good for baking bread, potatoes, beans, cereals, cakes, and other things.

Tools and Materials

Adobe blocks or brick:
35cm x 25cm x 10cm
(14" x 10" x 4").

Wood or metal for door and smoke hole covers.

Clay or cement for plastering

should be tight-fitting so that hot air will not leave the oven when the openings are closed.

Plaster the inside and outside with a clay mixture or cement. The stove should be re-plastered at least once a year.

With the door and smoke-hole open, build a fire in the oven.

When the fire has burned to ashes, sweep out the ashes.

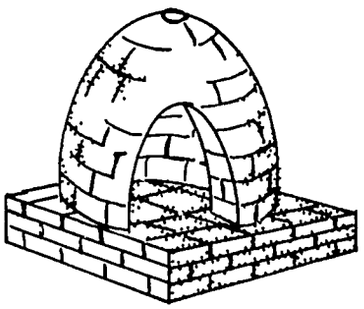

FIGURE 1 THE OUTDOOR OVEN BEFORE BEING PLASTERED.

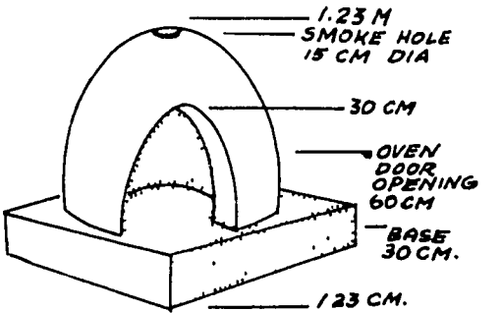

FIGURE 2 THE OUTDOOR OVEN AFTER BEING PLASTERED.

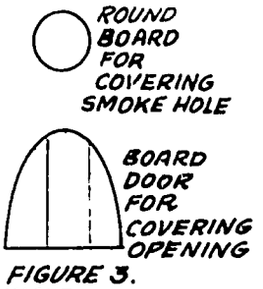

FIGURE 3. TIGHT FITTING WOODEN OR METAL COVERS ARE USED TO COVER DOOR OPENING AND SMOKE HOLE.

Lay bricks on the ground to make a base, 120cm x 120cm square and 30cm high (4' x 4' x 1'), on which to build the oven. After making the base, build the oven walls in an oval shape as shown in Figures 1 and 2. Lay the bricks flat and lengthwise starting from each side of the door opening, using the center of the square base as a guide. To form the dome shape and oval door opening cut the corners of the bricks as you lay them. The inside space should be about 75cm (30") in diameter and 90cm (3') high. Leave a front opening for the oven door and a small opening at the top to let the smoke escape (see Figure 2).

Now make wooden or metal covers to fit tightly over the door opening and the smoke-hole (see Figure 3). These

Put the food to be cooked inside the oven. Use trays or be sure the oven floor is very clean.

Cover the door opening and smoke-hole tightly.

Experience will teach how long food should be cooked. Bread takes an hour to an hour and a half.

This type of oven has been used in villages throughout South Asia.

Source:

Home Making Around the World, U.S. Agency for International Development.

HOME SOAP MAKING

Soap can be made on a small-scale in the home or village cheaply and easily. The main ingredients are fats and lye, both of which can be made from materials found throughout the world.

Making soap at home is practical when there is waste fat or oil and when there is no cheap source of soap.

Soap is an essential cleaning agent, helping people to keep themselves and their surroundings clean. Cleanliness helps to keep disease from spreading. When soap is mixed with water, it forms a lather which washes out dirt and grease far better than water alone.

Two Basic Methods

The two basic methods for small-scale soap making are:

Method 1. With commercial lye: This method is used when commercially-prepared lye or caustic soda (sodium hydroxide crystals) is available.

Method 2. With lye leached from ashes (potash): This method is patterned after a process used by early settlers of North America.

The first method, soap-making with commercial lye, is recommended because it is simpler and more reliable.

Ingredients for Soap

Fats and Oils. Soap can be made from either animal fat or vegetable oil. Mineral oil cannot be used. Animal fats commonly used are tallow, mutton and lard. Vegetable oils used include the oils from coconuts, palm nuts, maize, olives, cottonseeds, soybeans, groundnuts, safflowers and castor oil. Chicken fat, which is not a hard fat, is considered an oil. The best soap is made from a mixture of fat and oil.

- If you want a hard soap for use in hot water, use six pounds of tallow made from melting rendered sheep, cattle or horse fat.
- If you want a good laundry soap, use 3 pounds of tallow and 3 pounds of lard or cooking grease from melted hog fat, skin and bones.
- If you want a fine toilet soap, use 3 pounds of tallow with 3 pounds of vegetable oil.

The best vegetable oils are made from crushing dried coconut meat, palm nut kernels or the outer pulp of the palm nut. The last makes a harder soap than the coconut meat or kernels.

Lye. Either commercially-prepared lye, also called caustic soda or sodium hydroxide (NaOH) crystals, or lye leached from ashes, called potash, can be used. Caustic soda is cheap and is sold in the markets of most countries.

Lye is a corrosive poison. It can cause serious burns. Do not let the lye crystals, dust, or solution touch your skin. If any of them do touch your skin, wash with water and then with a vinegar solution. If any of them are swallowed, take as much vinegar, citrus juice or rhubarb as possible and call a doctor.

*** * KEEP LYE AWAY FROM CHILDREN * ***

Borax. Borax is not necessary for making soap, but it improves the soap's appearance and increases the amount of suds produced.

Perfume. Artificial perfumes or essential oils are not necessary ingredients but they can be used to make a more pleasant soap, particularly if rancid fat is used. If soap is made from tallow, citrus oil or juice will improve its smell and serve as a preservative.

Water. The best water to use is soft water. Water which is not too hard can be used, but if it is very hard it is best to soften it. Hard water contains mineral salts which hinder the cleansing action of soap. To soften hard water: Add 15ml (1 tablespoon) of lye to 3.8 liters (1 gallon) of hard water, stirring the water as it is added. Let the mixture stand for several days. Pour off the water from the top. This is the soft water for soap making. The water and particle mixture at the bottom of the container can be thrown away.

Soft water can also be obtained by collecting rain water.

Soap Making with Commercially-Prepared Lye

The directions given here will make 4.1kg (9 pounds) of good quality soap. But the amount can be changed as long as the techniques and proportions are followed.

Equipment

Bowls, buckets, pots or tubs made of enamel, iron or clay. Never use aluminum; lye destroys it.
Measuring cups of glass or enamel.
Wood or enamel spoons, paddles, or smooth sticks for stirring.
Wood, cardboard or waxed containers for molding soap. The molds can be of any size but those which are 5cm to 7.5cm (2" to 3") deep are best. Gourds or coconut shells can also be used for molds.
Cotton cloth or waxed paper for lining the molds. Cut the cloth or paper into two strips: one should be a little wider than the mold and the other should be a little longer. This lining will make it easier to remove the soap from the molds.
A thermometer which ranges from -18° to 65°C. (0° to 150°F.) is helpful, but not necessary.

Recipes:

For 4.1 kg (9 pounds) of soap:
Oil or clean, hard fat: 13 cups (3 liters) or 2.75kg (6 pounds)
Borax (optional): 57ml (1/4 cup)
Lye (sodium hydroxide crystals): 370g (13 ounces)
Water: 1.2 liters (5 cups)
Perfume (optional), use one of the following:
Oil of sassafras: 20ml (4 teaspoons)
Oil of wintergreen: 10ml (2 teaspoons)
Oil of citronella: 10ml (2 teaspoons)
Oil of lavender: 10ml (2 teaspoons)
Oil of cloves: 5ml (1 teaspoon)
Oil of lemon: 5ml (1 teaspoon)

For one bar of soap:

Oil or clean, hard fat: 230ml (1 cup)
Borax (optional): 5ml (1 teaspoon)
Lye (sodium hydroxide crystals): 23.5g (5 teaspoons)
Water: 115ml (1/2 cup)
Perfume (optional): a few drops

How to Make the Soap

The fat used in making the soap should be clarified. To do this: put the fat in a kettle with an equal amount of water; boil this mixture. Remove the kettle from the fire and strain the mixture through a sieve or a piece of cheesecloth. Add 1 part cold water to 4 parts of hot liquid. Do not stir the mixture; let it stand until it cools. The clarified fat can then be removed from the top. To help in cleaning the fat, a sliced unpared potato can be added before the mixture is boiled.

Measure carefully the amount of fat required and melt it down in the kettle to be used for soap making.

Measure the amount of water required.

Measure the lye required.

To the water previously measured slowly add the measured lye. For safety always add the lye to the water; never add water to lye. The resulting solution will become very hot and may spatter. Cool the lye mixture down to a body temperature. To test when the solution has reached body temperature, place your hand under the vessel holding the lye solution: there should be no noticeable difference between the temperature of your hand and that of the vessel. Do not put your finger in the solution.

Cool the melted fat to body temperature. If borax is used, add it to the fat when it has cooled.

Then add the lye mixture to the melted fat. The lye mixture should be poured into the fat very slowly in a small stream. As this is being done the whole mixture is stirred slowly and evenly in one direction. After the lye solution is added, the mixture is stirred until the spoon makes a track. This usually takes about 30 minutes. After this let the mixture stand, stirring it once or twice every 15 or 20 minutes for several hours. When the mixture is very thick and honey-like in consistency, pour it into the molds lined with cloth or waxed paper (see Figure 1).

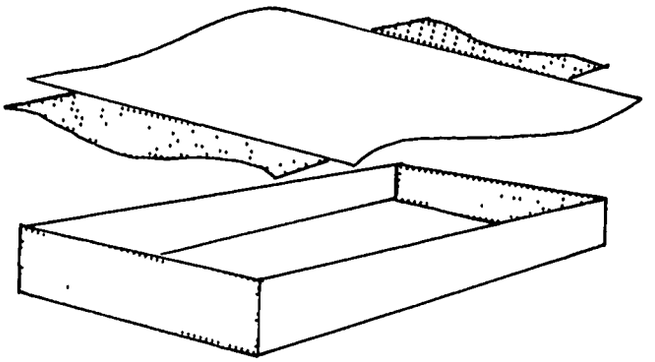

FIGURE 1 LINE THE MOLD BOX WITH TWO STRIPS OF COTTON CLOTH OR WAXED PAPER TO MAKE IT EASY TO REMOVE THE SOAP.

Cover the mold and let it set for 48 hours. Keep it dry and at room temperature. If it is moved or struck while it is setting, the ingredients may separate.

At the end of this period, the soap should be firm and can be removed from the mold. If it is not firm, let it set longer until it is.

If grease is visible on the top of the soap at the end of the 48-hour curing period, it should stand a while longer. If there is liquid at the bottom of the box, cut the soap into bars and let them stand a day or two to see if the liquid will be absorbed.

Reclaiming Unsatisfactory Soap

If some of the ingredients are still separated after this curing period, if the soap is curdled or grainy, or if you want a finer, smoother soap, add

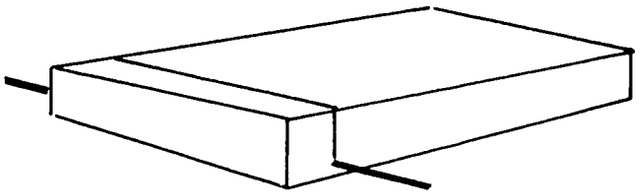

FIGURE 2. WHEN THE SOAP IS FIRM, REMOVE IT FROM THE MOLD AND, USING A THIN WIRE OR KNIFE, CUT IT INTO BARS.

water to it in this way:

Cut the soap into small pieces and put it into a pot with 2.8 liters (12 cups) of water and any liquid left in the molding box. Avoid touching the soap with your hands by wearing rubber gloves if possible, as there may be some free lye on the surfaces of the pieces of soap.

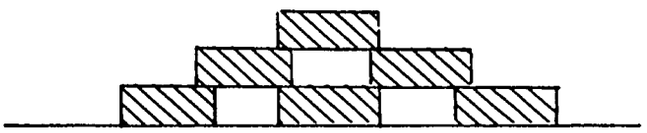

FIGURE 3. STACK THE BARS SO THAT AIR CAN CIRCULATE AROUND AND THROUGH THEM.

Bring it slowly to a boil and boil for 10 minutes, stirring occasionally. If you wish, you can add 10ml (2 teaspoons) of wintergreen, lemon or other oil at this stage for perfume. Pour into a mold box, let stand 48 hours, and follow the procedure below.

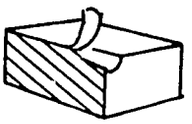

FIGURE 4. WHEN THE SOAP IS COMPLETELY CURED, IT SHOULD SHAVE FROM THE BAR IN CURLS.

Empty the soap from the box and cut it into bars with a string or wire (see Figure 2). Place the bars in an open stack so that air can circulate around and through them (see Figure 3). Leave them in a warm, dry place for 2 or 4 weeks.

How to Know Good Soap

The soap should be hard, white, clean smelling and almost tasteless. It should shave from the bar in a curl (see Figure 4). It should not be greasy or taste harsh when touched by the tongue. If the soap is unsatisfactory for these or any other reasons, reclaim it by the procedure given above.

Making Soap with Lye Leached from Ashes

This method, patterned after one used by the early settlers of North America, produces soft soap by combining fat and potash (lye obtained by leaching wood or plant ashes.)

This recipe has been tried successfully with waste cooking grease, olive oil, peanut oil and cocoa butter.

Equipment for Leaching Lye

Several medium sized rocks.

A flat stone with a groove and a run-off lip chipped into it.

19-liter (5-gallon) wooden bucket with several small holes in the bottom. A hollowed log with the same capacity can be used.

Collection vessels for the lye. These should be made of iron, steel, enamel, or clay. An aluminum vessel should not be used, since lye would corrode it.

Small twigs

Straw

Ingredients

19 liters (5 gallons) of ashes. The ashes may be from all types of woods. The ashes from the hardwoods yield the best lye. Ashes from the burning of plants and leaves of trees may be used (see Table 1). Ashes of burnt seaweed are particularly useful as these produce a sodium-based lye from which hard soap can be made. Lye leached from the ashes of plant life (excepting seaweed) is potash or potassium carbonate (K_2CO_3), an alkali. This alkali reacts with fat to form soft soap. Ashes from other materials such as paper, cloth, and garbage cannot be used.

7.6 liters (2 gallons) of soft or medium-hard water.

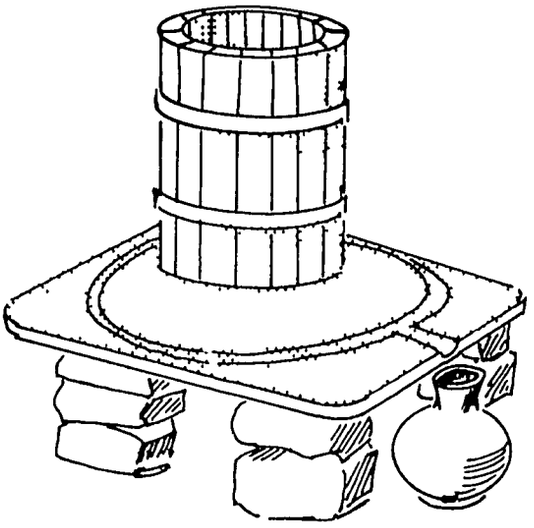

FIGURE 5. ROCKS ARE PILED TO FORM A BASE FOR THE FLAT, GROOVED STONE ON WHICH THE BUCKET IS PLACED.

Leaching the Lye

Pile the rocks so that the flat, grooved stone rests evenly on top (see Figure 5).. Set the wooden bucket on this stone.

In the bottom of the bucket, make a filter to trap the ashes by criss-crossing two layers of small twigs and placing a layer of straw on top (see Figure 6).

Fill the bucket with dry ashes. To keep the lye from being leached accidentally, the ashes must be kept dry before they are used.

Pour warm water into the bucket, making the ashes moist and sticky. To make sure that the water passes through the ashes at the correct rate for leaching the lye, move the ashes up at the sides of the bucket to form a depression in the center.

Add all the remaining water in small

Scientific Name	Common Name	Prominent location
Arthrocnemum indicum	mangrove	Indian coast
Atriplex repers	salt bush	Indian coast
Avicennia nitida	mangrove	Philippino swamps
Cocos nucifera	coconut palm	coasts of all tropical regions
Halocharis violocea		Indian coast
Haloxylon recurm	camel food	Indian coast
Haloxylon multiflorum		Indian coast
Haloxylon salicornicum		Indian coast
Kochia indica		Indian coast
Salicornia brachiata		Indian coast
Salsola foetida	Aden balsam	Indian coast
Suaeda fruticosa		Indian coast
Suaeda monoica		Indian coast
Suaeda maritima		Indian coast
Suaeda nudiflora		Indian coast

Table 1. Tropical plants whose leaf ashes yield lye for soap making.

amounts in the following manner: Fill the center depression with water; let the water be absorbed; fill the depression again. When about two-thirds of the water has been added, the lye or potash, a brown liquid, will start to flow from the bottom of the bucket. Use more water, if necessary, to start this flow. The lye flows over the flat stone into the groove and then into the collection vessel below the run-off lip. It takes about an hour to start the flow of lye.

The yield from the amounts given here is about 1.8 liter (7 3/4 cups) lye. The results vary according to the amount of water loss from evaporation and the kind of ashes used.

If the lye is of the correct strength, an egg or potato should float in it. A chicken feather dipped in the solution should be coated, but not eaten away. If the solution is weak, pour it through the barrel again, or through a new barrel of ashes, or concentrate it by boiling. Thirty-five liters of ashes

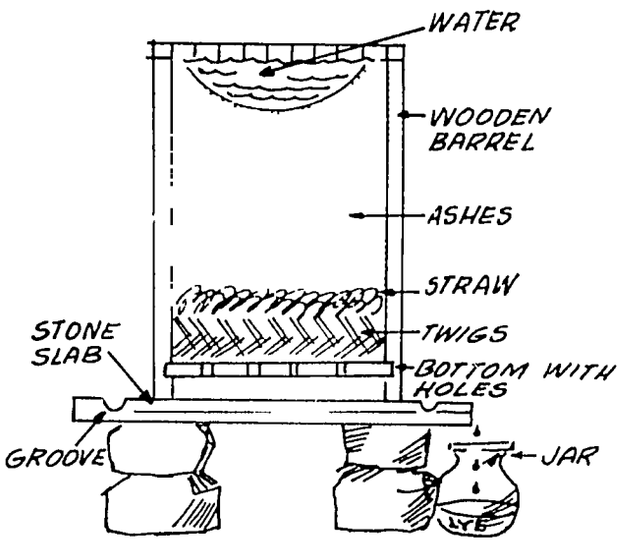

FIGURE 6. TWO LAYERS OF SMALL TWIGS ARE CRISS-CROSSED TO FORM A FILTER IN THE BOTTOM OF THE BUCKET WHEN THE BUCKET IS FILLED WITH ASHES, WATER IS POURED IN AND THE LYE SOLUTION, A BROWN LIQUID, SLOWLY DRIPS INTO A CONTAINER.

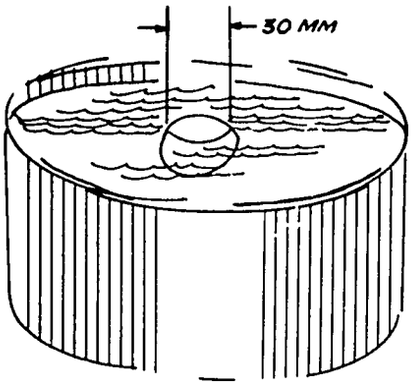

FIGURE 7 THE STRENGTH OF A LYE SOLUTION CAN BE TESTED BY FLOATING AN EGG IN IT. A SOLUTION OF THE CORRECT STRENGTH WILL RAISE PART OF THE EGG OUT OF THE WATER, FORMING AN OVAL ABOUT 30 MM LONG AT THE WATER'S SURFACE.

is about the right amount for 2 kilograms of fat (a bushel of ashes for 4 pounds of fat). This proportion, although cited in soap-making recipes of the colonial period in the United States, has not been tested. Many of the recipes of that era differ on the proportion of ashes to fat.

Equipment for Making Soft Soap

Iron Kettle
Wooden spoon or stick for stirring
Measuring vessels
Wooden, steel, iron, glass or clay vessels for storing the soap

Ingredients

Clarified fat (see Soap Making with Commercially-Prepared Lye for cleaning process)
Lye which floats an egg or potato (see Figure 7)

Making the Soap

Put 115ml (1/2 cup) of lye in the kettle for every 230ml (1 cup) of fats or oils to be used.

Add the measured amount of fat.

Boil the lye and fat together until the mixture becomes thick, rubbery, and foamy.

Remove the kettle from the fire and let it cool.

The soap is a thick, jelly substance that ranges in color from tan to dark brown depending on the fats or oils used and the length of boiling time.

Upon strong mixing in water, the soap will lather up into white suds and serve as an effective cleaning agent. This soap greatly improves with age. Store it in a container for at least a month before using it.

230ml (1 cup) of fat yields 230ml (1 cup) of soft soap.

Sources:

Mrs. Marietta Ellis, VITA Volunteer Bedford, Massachusetts

Dr. S.K. Barat, VITA Volunteer, Adyar, Madras, India

Home Life in Colonial Days, Alice Morse Earl, MacMillan Company, New York - A good description of soap making using potash.

Make Your Own Soap., Federal Extension Service, U.S. Department of Agriculture. Contains a good recipe and more detailed instructions for making soap with commercial lye. Available free from the Agency for International Development.

"Pioneer Life," World Book Encyclopedia. Field Enterprises Educational Corporation, Chicago - Contains interesting sketches of pioneer soap making.

A NEST OF LOW-COST BEDS

This nest of three beds will save space in a small room during the daytime because it takes up only the space needed for one bed.

These low-cost beds are easy to make from local materials. Dimensions suggested here are approximate. The exact dimensions depend on the kind of wood used.

Tools and Materials

Carpenter's tools

Wooden boards 2.5cm x 7.5cm (1" x 3"), of varying lengths

Wooden posts 5cm x 5cm (2" x 2"), of varying lengths

Nails

Paint

Bailing wire, burlap strips, rope or wood for the "spring" of the beds

All of the beds are the same width but the length and height of each bed varies so they fit under each other (see Figure 1).

The wood used in the largest bed is:

- 2 boards, 2.5cm x 7.5cm x 183cm (1" x 3" x 72")
- 2 boards, 2.5cm x 7.5cm x 91.5cm (1" x 3" x 36")
- 4 legs, 5cm x 5cm x 51cm (2" x 2" x 20")

Nail the legs to the ends of each of the 91.5cm (36") boards. Then join these boards by nailing the 183cm (72") boards to them as in Figure 1. This completes the framework, which is now ready for the spring to be attached.

The spring can be made by nailing bailing wire, burlap strips used as webbing or wood to the frame. Another method is to bore holes in the framework and pass

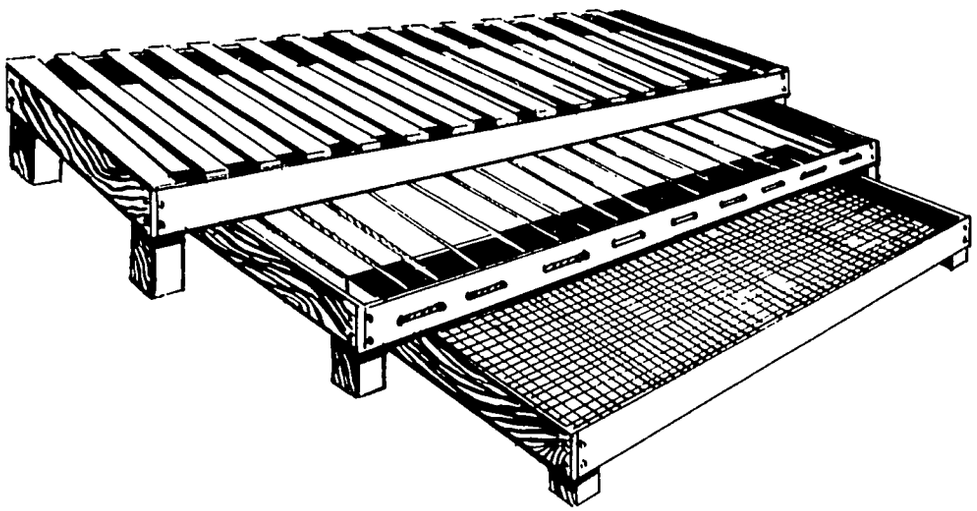

FIGURE 1. THE THREE BEDS ARE MADE TO FIT ONE UNDER THE OTHER, SAVING ON SPACE WHEN NOT IN USE. THREE DIFFERENT KINDS OF SPRING ARE SHOWN: WOOD ON THE LARGEST BED, ROPE ON THE MIDDLE-SIZE BED AND CHICKEN WIRE ON THE SMALLEST BED.

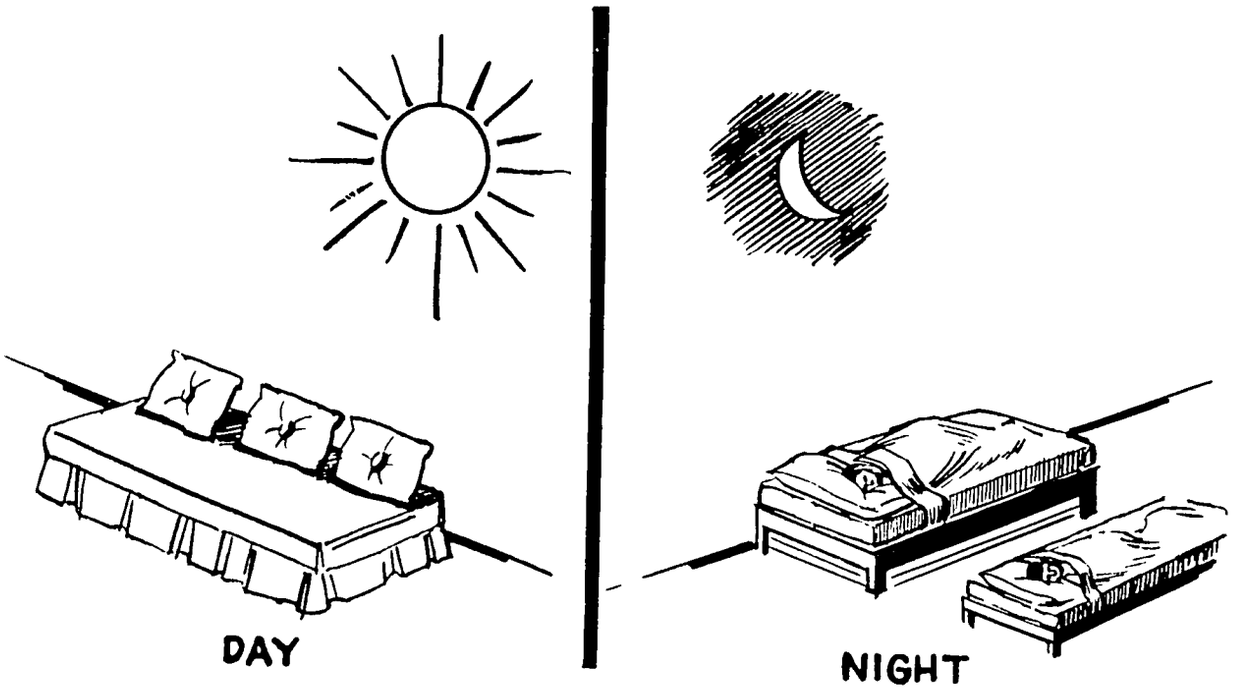

FIGURE 2 THE BEDS CAN SERVE AS A SOFA IN THE DAYTIME.

rope through the holes as shown in the middle-size bed in Figure 1.

The other two beds are made the same way. They use the following materials:

Middle-size bed:

- 2 boards, 2.5cm x 7.5cm x 168cm (1" x 3" x 66")
- 2 boards, 2.5cm x 7.5cm x 91.5cm (1" x 3" x 36")
- 4 legs, 5cm x 5cm x 38cm (2" x 2" x 15")

Smallest bed:

- 2 boards, 2.5cm x 7.5cm x 152cm (1" x 3" x 60")
- 2 boards, 2.5cm x 7.5cm x 91.5cm (1" x 3" x 36")
- 4 legs, 5cm x 5cm x 25cm (2" x 2" x 10")

More detailed instructions are given in: Low Cost Beds Made at Home, Federal Extension Service, U. S. Department of Agriculture. Available free from the Agency for International Development.

A LOCALLY-MADE MATTRESS

This low-cost mattress is made from materials available in most areas. It can be used as a bed at night and as a sofa by day. The mattresses are widely used.

Tools and Materials

Cotton

Corn shucks, rice or wheat straw, hay, banana or palm leaves

Cloth

Strong needles

Waxed cord

Oil felt or double-thickness ticking cut in a round shape, for tufts.

Hand paddle with small nails

Sharp knife

How to Make the Mattress

If corn shucks are used:

The first step is to dip the corn shucks in boiling water and, while they are still moist, shred them into small strips with a hand paddle that has small nails in it. The tough top part of the shuck is then cut off with a sharp knife. When dry, the shredded corn shucks are ready for use.

Cut six pieces of cloth...

- two pieces the size of the bed to make the top and bottom of the mattress.
- two pieces 15cm (6") wide and the length of the bed for the mattress sides.
- two pieces 15cm (6") wide and slightly longer than the width of

FIGURE 1. CORN SHUCKS OR SIMILAR FILLING MATERIALS ARE STUFFED INTO THE COVER, WHICH IS MADE FROM SIX PIECES OF CLOTH SEWN TO FORM A BOX WITH SQUARE CORNERS.

the bed, for the ends of the mattress.

Sew the pieces together to form a box with rounded corners. Attach the bottom piece on just one side, leaving the bottom open for filling the mattress. Twelve feed sacks full of tightly-packed corn shucks are enough for a double-bed mattress. A single bed mattress needs less.

Pack the filling material into the cloth cover in even layers. Otherwise the mattress will be lumpy. After each layer, pull the bottom piece over the filling material and beat the mattress gently to distribute the material evenly. Then pull the bottom piece back and continue filling the mattress. When the mattress is filled, sew the bottom piece in place. If there are still high and low spots in the mattress, beat it gently again: hitting the high spots to drive the filler into the low spots. Only a few strokes should be needed.

Making a Roll Edge:

A roll edge will keep the cotton in place and help the mattress to hold its shape. Mark a faint line 6cm (2 1/4") in from the edge seam all around the mattress top. Mark another faint line 1.5cm (1/2") below the seam. Sew the two lines together with stitches about 1.5cm (1/2") apart, working enough filler into the roll with each stitch to make the roll firm. Fill the roll evenly. In rounding the corners, make the stitches closer and take shorter stitches on top of the roll than on the bottom.

Turn the mattress over and make a roll edge on the other side.

Use the strong needle and waxed cord to sew the round pieces of oil felt or doubled ticking for simple tufts that will hold the filling in place.

More detailed instructions are given in: Making a Cotton Mattress, Federal Extension Service, U. S. Department of Agriculture. Available free from the Agency for International Development.

APPENDIX

Simple methods are given here for converting English and metric units of measurement. Following these is a series of useful conversion tables for units of area, volume, weight, pressure and power.

LENGTH CONVERSION

The chart in Figure 3 is useful for quick conversion from meters and centimeters to feet and inches, or vice versa. For more accurate results and for distances greater than 3 meters, use either the tables in Figure 2 or the equations.

The chart in Figure 3 has metric divisions of one centimeter to three meters, and English units in inches and feet to ten feet. It is accurate to about plus or minus one centimeter.

Example:

An example will explain how to use the tables. Suppose you wish to find how many inches are equal to 66cm. On the "Centimeters into Inches" table look down the leftmost column to 60cm and then right to the column headed 6cm. This gives the result, 25.984 inches.

FIGURE 1

Equations:

1 inch = 2.54cm
1 foot = 30.48cm
= 0.3048m
1 yard = 91.44cm
= 0.9144m
1 mile = 1.607km
= 5280 feet
1cm = 0.3937 inches
1m = 39.37 inches
= 3.28 feet
1km = 0.62137 miles
= 1000 meters

FIGURE 2

INCHES INTO CENTIMETERS
(1 in. = 2.539977 cm)

inches	0	1	2	3	4	5	6	7	8	9
0	cm	2 54	5 08	7 62	10 16	12 70	15 24	17 78	20 32	22.86
10	25 40	27 94	30 48	33 02	35 56	38 10	40 64	43 18	45 72	48 26
20	50 80	53 34	55 88	58 42	60 96	63 50	66 04	68 58	71 12	73 66
30	76 20	78 74	81 28	83 82	86 36	88 90	91 44	93 98	96 52	99 06
40	101 60	104 14	106 68	109 22	111 76	114 30	116 84	119 38	121 92	124 46
50	127 00	129 54	132 08	134 62	137 16	139 70	142 24	144 78	147 32	149 86
60	152 40	154 94	157 48	160 02	162 56	165 10	167 64	170 18	172 72	175 26
70	177 80	180 34	182 88	185 42	187 96	190 50	193 04	195 58	198.12	200.66
80	203 20	205 74	208 28	210 82	213 36	215 90	218 44	220 98	223 52	226 06
90	228 60	231 14	233 68	236 22	238 76	241 30	243 84	246 38	248 92	251 46

CENTIMETERS INTO INCHES
(1 cm. = 0 3937 in.)

cm.	0	1	2	3	4	5	6	7	8	9
0	inches	0.394	0 787	1 181	1.575	1 969	2 362	2 756	3.150	3.543
10	3.937	4 331	4 724	5 118	5 512	5 906	6 299	6.693	7 087	7.480
20	7.874	8 268	8 661	9 055	9 449	9 843	10 236	10.630	11 024	11 417
30	11.811	12 205	12 598	12 992	13 386	13 780	14 173	14.567	14 961	15 354
40	15.748	16 142	16 535	16 929	17 323	17 717	18 110	18 504	18 898	19 291
50	19.685	20 079	20 472	20 866	21 260	21 654	22 047	22 441	22.835	23 228
60	23 622	24 016	24 409	24 803	25.197	25 591	25 984	26 378	26 772	27.165
70	27 559	27 953	28 346	28 740	29 134	29 528	29 921	30.315	30 709	31 102
80	31 496	31 890	32 283	32 677	33 071	33 465	33 858	34.252	34 646	35 039
90	35 433	35.827	36.220	36 614	37 008	37 402	37 795	38.189	38.583	38 976

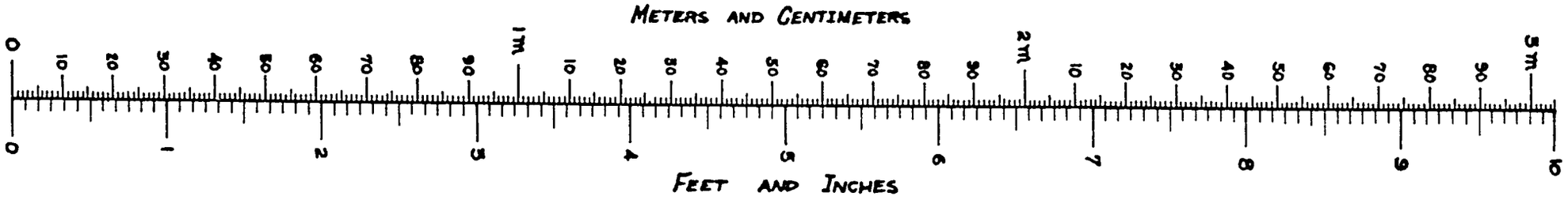
METERS AND CENTIMETERS
0
10
20
30
40
50
60
70
80
90
1 m
10
20
30
40
50
60
70
80
90
2 m
10
20
30
40
50
60
70
80
90
3 m
0
1
2
3
4
5
6
7
8
9
10
FEET AND INCHES

FIGURE 3

WEIGHT CONVERSION

The chart in Figure 5 converts pounds and ounces to kilograms and grams or vice versa. For weights greater than ten pounds, or more accurate results, use the tables (Figure 4) or conversion equations. See "Length Conversion," Figure 2, for an example of the use of the tables.

On the chart, notice that there are sixteen divisions for each pound to represent ounces. There are 100 divisions only in the first kilogram, and each division represents ten grams. The chart is accurate to about plus or minus twenty grams.

Equations:

1 ounce = 28.35 grams
1 pound = 0.4536 kilograms
1 gram = 0.03527 ounce
1 gram = 2.205 pounds

FIGURE 4

KILOGRAMS INTO POUNDS
(1 kg. = 2 20463 lb.)

kg	0	1	2	3	4	5	6	7	8	9
0	lb	2 20	4 41	6 61	8 82	11 02	13 23	15 43	17 64	19 84
10	22 05	24 25	26 46	28 66	30 86	33 07	35 27	37 48	39 68	41 89
20	44 09	46 30	48 50	50 71	52 91	55 12	57 32	59 53	61 73	63 93
30	66 14	68 34	70 55	72 75	74 96	77 16	79 37	81 57	83 78	85 98
40	88 19	90 39	92 59	94 80	97 00	99 21	101 41	103 62	105 82	108 03
50	110 23	112 44	114 64	116 85	119 05	121 25	123 46	125 66	127 87	130 07
60	132 28	134 48	136 69	138 89	141 10	143 30	145 51	147 71	149 91	152 12
70	154 32	156 53	158 73	160 94	163 14	165 35	167 55	169 76	171 96	174 17
80	176 37	178 58	180 78	182 98	185 19	187 39	189 60	191 80	194 01	196 21
90	198 42	200 62	202 83	205 03	207 24	209 44	211 64	213 85	216 05	218 26

POUNDS INTO KILOGRAMS
(1 lb = 0 45359 kg.)

lb.	0	1	2	3	4	5	6	7	8	9
0	kg	0.454	0 907	1 361	1 814	2 268	2 722	3 175	3 629	4 082
10	4 536	4 990	5.443	5 897	6 350	6 804	7 257	7 711	8 165	8 618
20	9 072	9 525	9 979	10 433	10 886	11 340	11 793	12 247	12 701	13 154
30	13 608	14 061	14 515	14 969	15 422	15 876	16 329	16 783	17 237	17 690
40	18 144	18 597	19 051	19 504	19 958	20 412	20 865	21 319	21 772	22 226
50	22 680	23 133	23 587	24 040	24 494	24 948	25 401	25 855	26 308	26 762
60	27 216	27 669	28 123	28 576	29 030	29 484	29 937	30 391	30 844	31 298
70	31 751	32 205	32 659	33 112	33 566	34 019	34 473	34 927	35 380	35 834
80	36 287	36 741	37 195	37 648	38 102	38 555	39 009	39 463	39 916	40 370
90	40 823	41 277	41 730	42 184	42 638	43 091	43 545	43 998	44 452	44 906

FIGURE 5

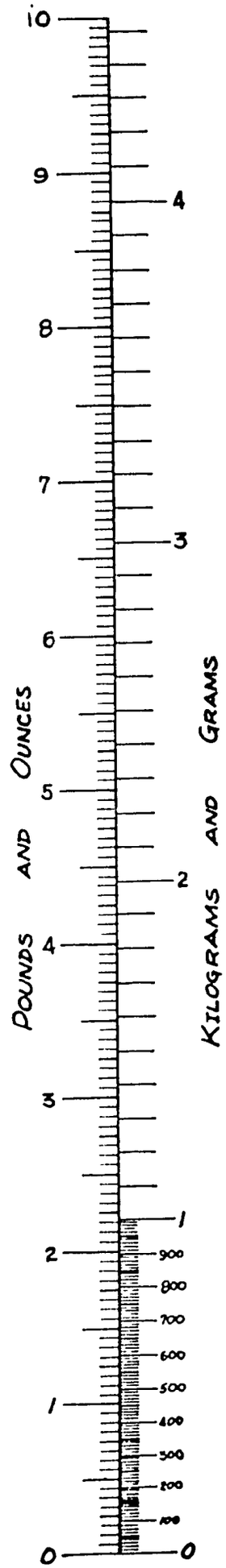

FIGURE 1

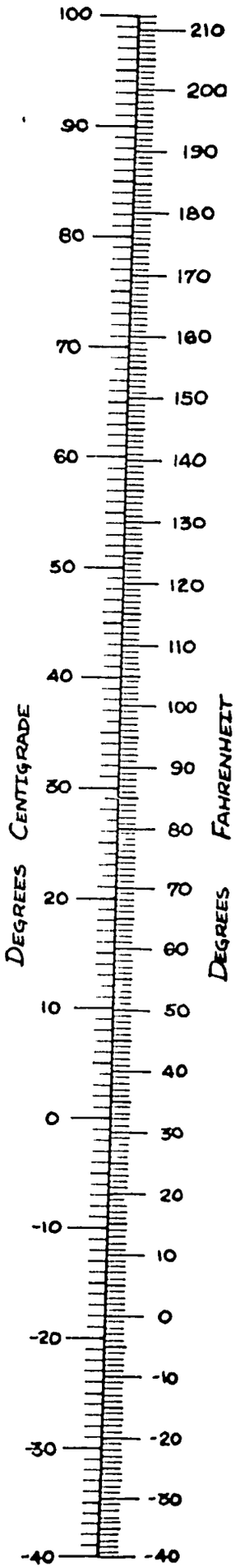

TEMPERATURE CONVERSION

The chart in Figure 1 is useful for quick conversion from degrees Celsius (Centigrade) to degrees Fahrenheit and vice versa. Although the chart is fast and handy, you must use the equations below if your answer must be accurate to within one degree.

Equations:

Degrees Celsius = 5/9 x (Degrees Fahrenheit -32)

Degrees Fahrenheit = 1.8 x (Degrees Celsius) +32

Example:

This example may help to clarify the use of the equations; 72F equals how many degrees Celsius?

72F = 5/9 (Degrees F -32)

72F = 5/9 (72 -32)

72F = 5/9 (40)

72F = 22.2C

Notice that the chart reads 22C, an error of about 0.2C.

Conversion Tables

Units of Area

1 Square Mile	= 640 Acres	= 2.5899 Square Kilometers
1 Square Kilometer	= 1,000,000 Square Meters	= 0.3861 Square Mile
1 Acre	= 43,560 Square Feet	
1 Square Foot	= 144 Square Inches	= 0.0929 Square Meter
1 Square Inch	= 6.452 Square Centimeters	
1 Square Meter	= 10.764 Square Feet	
1 Square Centimeter	= 0.155 Square Inch	

Units of Volume

1.0 Cubic Foot	= 1728 Cubic Inches	= 7.48 U.S. Gallons
1.0 British Imperial Gallon	= 1.2 U.S. Gallons	
1.0 Cubic Meter	= 35.314 Cubic Feet	= 264.2 U.S. Gallons
1.0 Liter	= 1000 Cubic Centimeters	= 0.2642 U.S. Gallons

Units of Weight

1.0 Metric Ton	= 1000 Kilograms	= 2204.6 Pounds
1.0 Kilogram	= 1000 Grams	= 2.2046 Pounds
1.0 Short Ton	= 2000 Pounds	

Conversion Tables

Units of Pressure

1.0 Pound per square inch	= 144 Pounds per square foot
1.0 Pound per square inch	= 27.7 Inches of Water*
1.0 Pound per square inch	= 2.31 Feet of Water*
1.0 Pound per square inch	= 2.042 Inches of Mercury*
1.0 Atmosphere	= 14.7 Pounds per square inch (PSI)
1.0 Atmosphere	= 33.95 Feet of Water
1.0 Foot of Water = 0.433 PSI	= 62.355 Pounds per square foot
1.0 Kilogram per square centimeter	= 14.223 Pounds per square inch
1.0 Pound per square inch	= 0.0703 Kilogram per square centimeter

* at 62 degrees Fahrenheit (16.6 degrees Celsius)

Units of Power

1.0 Horsepower (English)	= 746 Watts = 0.746 Kilowatt (KW)
1.0 Horsepower (English)	= 550 Foot Pounds per second
1.0 Horsepower (English)	= 33,000 Foot Pounds per minute
1.0 Kilowatt (KW) = 1000 Watts	= 1.34 Horsepower (HP) English
1.0 Horsepower (English)	= 1.0139 Metric Horsepower (cheval-vapeur)
1.0 Metric Horsepower	= 75 Meters X Kilogram/Second
1.0 Metric Horsepower	= 0.736 Kilowatt = 736 Watts