AGENCY FOR INTERNATIONAL DEVELOPMENT
WASHINGTON, D. C. 20523

BIBLIOGRAPHIC INPUT SHEET

FOR AID USE ONLY
Batch 70

1. SUBJECT CLASSIFICATION

A. PRIMARY: Science and technology — TC00-0000-0000

B. SECONDARY: Applications

2. TITLE AND SUBTITLE

Village technology handbook,sect.5: Construction

3. AUTHOR(S)

(101) Volunteers for Int.Technical Assistance,Mt.Rainier,Md.

4. DOCUMENT DATE	5. NUMBER OF PAGES	6. ARC NUMBER
1970	47p.	ARC

7. REFERENCE ORGANIZATION NAME AND ADDRESS

VITA

8. SUPPLEMENTARY NOTES *(Sponsoring Organization, Publishers, Availability)*

9. ABSTRACT

10. CONTROL NUMBER

PN-AAE-662

11. PRICE OF DOCUMENT

12. DESCRIPTORS

Bamboo
Concretes
Construction
Glue
Intermediate technology

13. PROJECT NUMBER

14. CONTRACT NUMBER

CSD-2795 GTS

15. TYPE OF DOCUMENT

AID 590-1 (4-74)

Village Technology Handbook

SECTION 5: CONSTRUCTION

FOREWORD

Progress is the result of man's mastery of the world he lives in. The VILLAGE TECHNOLOGY HANDBOOK is aimed at helping villagers to master the resources available to them: to improve their own lives and to bring their villages more fully into the lives of the nations of which they form a basic and important part.

Village development takes on special importance in the light of the fact that 80 percent of those who live in less-developed countries live in villages. If progress is to come to nations, progress must come to villages.

Technical information is a basic factor in progress, along with other basic factors: political, social and economic. The VILLAGE TECHNOLOGY HANDBOOK was conceived by VITA Volunteers in 1962 as a means of bridging the "technical information gap" which keeps the world's villages from learning from one another's experience. The book's aim is to gather in one publication information from many sources which has been found helpful in villages.

This handbook was first published by the U.S. Agency for International Development in two volumes in 1963 and 1964. In the 1970 edition, the two earlier volumes are integrated into one book, the editing has been made more uniform, some new information has been added and the illustrations have been improved. The entire handbook has been checked for accuracy by VITA Volunteer specialists. A new feature in this edition is the incorporation of information on other publications which cover in detail subjects which are discussed only briefly here. VITA plans to continue to improve the handbook in future editions to make it increasingly effective as a key to existing technology for village workers.

The information in the handbook has come from many sources. VITA hopes that criticism and new information will come from many of the same sources--and from other sources. The questionnaire on page ix was designed to stimulate this flow of criticism and information. VITA will test new information and then disseminate it to those who need it.

VITA is grateful to the U.S. Agency for International Development for its financial support of the revision and for its help in reviewing the contents. Thanks are also due to the Federal Extension Service, U.S. Department of Agriculture, for its help in reviewing the section on "Home Improvement".

A NOTE ON USING THE HANDBOOK

This handbook describes techniques and devices which can be made and used in villages. Hopefully the book will generate new ideas as well as pass on information which has already been tried.

Some of the practices suggested here can be adopted on an individual basis. Others, however, will require cooperation by many people and, perhaps, by government agencies. In many cases, it

would be well to seek out extension services existing in your area. If local government or university extension services are available, they will be able to give you information well suited to local conditions. In some cases, there may be a need for a credit union or a consumer, marketing, housing or service cooperative. Information on credit unions is available from:

CUNA International, Inc.
World Extension Department
Box 431
Madison, Wisconsin 53701
U.S.A.

Information on cooperatives is available from:

Agricultural Cooperative Development International
Suite 1200
1430 K St., N.W.
Washington, D.C. 20005
U.S.A.

When the materials suggested in the handbook are not available, it may be possible to substitute other materials; but be careful to make any changes in dimensions made necessary by such substitutions.

Dimensions are given in metric units in the text, with English units in parentheses. Only metric units are given in the illustrations. Conversion tables are given in the Appendix.

Reference materials, along with information on where they can be obtained, are listed at the end of a specific entry when they pertain to that entry. When they refer more generally to the field covered in a section of the book, they are given at the end of the section. If you cannot get these publications, VITA may be able to help you.

If you want to use translations of material in the handbook, we ask you to let VITA know. The material you want may already be translated; if it is not, and if you translate it, VITA would like to make your translation available to others.

If you have questions on the material presented here, if you run into problems in implementing the handbook's suggestions, or if you have other technical problems, do not hesitate to ask for the personal help of a VITA Volunteer specialist. Write to:

VITA
3706 Rhode Island Avenue
Mt. Rainier, Md. 20822
U.S.A.

VITA's Volunteer Translation Service can translate letters in languages other than English, but correspondence moves much more quickly when carried on entirely in English. To help VITA Volunteers find a useful solution to your problem as quickly as possible, you should:

1. Be quantitative--give measurements, sketches or, when possible, photos.

2. Explain what materials are available and what limitations there are on cost.

3. Describe the best solution, if any, found so far in the area.

4. Explain any pertinent social or cultural conditions.

5. Indicate a deadline for action, especially if immediate attention is needed.

6. Don't expect miracles on the first reply. Successful problem-solving often takes a number of letters back and forth.

WHAT IS VITA?

VITA (Volunteers in Technical Assistance) was established in 1959 as a private, non-profit organization responding to requests for assistance in economic and social development. VITA mobilizes and coordinates the work of over 7,000 volunteer professionals representing 96 countries, 2000 corporations, universities, and other institutions. The VITA talent bank represents know-how in commerce and industry, agriculture and education, engineering and public health, in addition to many other fields.

VITA provides the most appropriate knowledge to specific calls for assistance from individuals, organizations, small businesses and self-help development groups. In its brief history VITA has responded to over 25,000 requests. VITA meets people's needs through the mail, by telephone, and by on-site counselling. Requests have come from village councils, community development volunteers, farmers, small business owners, and from members of national and international public and private institutions. VITA's unique method matches people with need and people with knowledge to give. This partnership increases the opportunity for the success of the requester's project.

One of the most effective ways that VITA shares its information with many people in through its Publications Program. The VILLAGE TECHNOLOGY HANDBOOK has played an important role in helping to disseminate that information. Supplementing this book is VITA's Technology Manual series, how-to-do-it booklets, which cover a wide spectrum of subject matter. A publications list is available on request.

In its OVERSEAS LIAISON PROGRAM, VITA encourages the formation of similar technical assistance programs throughout the world. Cooperation with these and other organizations working in the developing countries will give VITA access to on-the-spot background information on the technological aspects of international development.

VITA is financed by contributions from private individuals, foundations and industry, and by government grants.

SYMBOLS AND ABBREVIATIONS USED IN THIS BOOK

@ . . . . at
" . . . . inch
' . . . . foot
C . . . . degrees Celsius (Centigrade)
cc . . . cubic centimeter
cm . . . centimeter
cm/sec . centimeters per second
d or dia. diameter
F . . . . degrees Fahrenheit
gm . . . gram
gpm . . . gallons per minute
HP . . . horsepower
kg . . . kilogram
km . . . kilometer
l . . . . liter
lpm . . . liters per minute
l/sec . . liters per second
m . . . . meter
ml . . . milliliters
mm . . . millimeters
m/m . . . meters per minute
m/sec . . meters per second
ppm . . . parts per million
R . . . . radius

QUESTIONNAIRE

NOTE TO THE READER: VITA's publications are compiled by VITA Volunteers because they want to help people in developing areas. With your field experience, you are in a unique position of being able to increase the usefulness of this work by sharing what you have learned with the people who will use the publications in the future. You are strongly urged to complete the following questionnaire (using additional sheets if necessary), cut it out and send it to:

VITA
3706 Rhode Island Avenue
Mt. Rainier, Md. 20822
U.S.A.

Date _____

Name _____ Agency _____

Address _____

_____

1. Which items from the VILLAGE TECHNOLOGY HANDBOOK have you put into practice?

2. Have results been good or otherwise?

3. Have you made improvements or modifications in any of the devices or techniques? If so, please describe them, including photographs or sketches if possible.

4. Have you devised any new equipment or techniques not described in the handbook which may be of use to others? If so, please describe them.

5. Did you find the handbook useful, too simple, too complex, incomplete?

6. Other comments and suggestions:

TABLE OF CONTENTS

Forward v
A Note on Using the Handbook v
What is VITA? vii
Symbols and Abbreviations Used in This Book viii
Questionnaire ix

SECTION 1: WATER RESOURCES 1

Part 1: Developing Water Sources 3
- Getting Ground Water from Wells and Springs
- Tubewells
- Dry Bucket Well Drilling
- Driving Wells
- Dug Wells

Part 2: Water Lifting and Transport 63
- Water Transport
- Water Lifting
- Pumps

Part 3: Water Storage and Water Power 107
- Spring Development
- Cisterns
- Selecting a Damsite
- Reciprocating Wire Power Transmission

Part 4: Water Purification 123
- Boiler for Drinking Water
- Chlorination for Polluted Water and Super-Chlorination of Wells, Spring Encasements and Cisterns
- Water Purification Plant
- Sand Filter

SECTION 2: HEALTH AND SANITATION 145

Part 1: Sanitary Latrines
Part 2: Bilharziasis

SECTION 3: AGRICULTURE 183

Part 1: Earth Moving Devices for Irrigation and Road-Building
Part 2: Irrigation
Part 3: Poultry Raising
Part 4: Silage for Dairy Cows

SECTION 4: FOOD PROCESSING AND PRESERVATION 255

Part 1: Storing Food at Home
Part 2: Storing Vegetables and Fruits for Winter Use
Part 3: How to Salt Fish

SECTION 5: CONSTRUCTION 283

Part 1: Concrete Construction
Part 2: Bamboo Construction
Part 3: Glues

SECTION 6: HOME IMPROVEMENT 319

Solar Water Heater
Washing Machines
Cookers and Stoves
Home Soap Making
Bedding

SECTION 7: CRAFTS AND VILLAGE INDUSTRY 353

SECTION 8: COMMUNICATIONS 365

Part 1: Bamboo or Reed Writing Pens
Part 2: Silk Screening
Part 3: Inexpensive Rubber Cement

APPENDIX

Temperature Conversion 377
Length Conversion
Weight Conversion
Conversion Tables

Concrete Construction

Concrete is a strong and inexpensive construction material when it is properly prepared and used. This introduction explains the importance of a good mixture and describes the materials used in the mixture. Following this are entries on:

1. Calculating amounts of materials for concrete.
2. Mixing concrete by machine or by hand.
3. Testing concrete mixtures.
4. Making forms for concrete.
5. Placing concrete in forms.
6. Curing concrete.
7. Making quick-setting concrete.
8. Useful sources of information on concrete.

Concrete is made by combining the proper proportions of cement, water, fine aggregate (sand) and coarse aggregate (gravel). A chemical reaction, hydration, takes place between the water and cement, causing the concrete to harden or set rapidly at first, then more slowly over a long period of time.

Importance of a Good Mixture

After concrete has set, there is no simple non-destructive test to find out how strong it is. Therefore, the entire responsibility for making concrete as strong as a particular job demands rests with the supervisor and the people who prepare, measure and mix the ingredients, place them in the forms, and watch over the concrete while it hardens.

FIGURE 1.

The most important factor in making strong concrete is the amount of water used. Beginners are likely to use too much. In general, the lower the ratio of water to cement - the stronger the concrete will be.

The proper proportioning of all materials is essential. The section on the "Calculating Amounts of Materials for Concrete" provides the necessary information.

Aggregates: Gravel and Sand

To make strong concrete, the coarse aggregate (gravel) and fine aggregate (sand) must be the right size, have the right shape and be properly graded.

Coarse aggregate sizes can vary from 0.5cm (1/4") to 4 or 5cm (1 1/2" or 2") in diameter. The maximum size depends on the nature of the work. In general, the largest particles should not be more than one-fourth the thickness of the

slab. Sand can vary from sizes smaller than 0.5cm down to, but not including, silty material.

Very sharp, rough, or flat aggregate should not be used in concrete. The best aggregate is cubical material (from a rock crusher) or rounded gravel (from a stream bed or beach).

Proper grading means that there are not too many grains or pebbles of any one size. To visualize this, think of a large pile of stones all 5cm (2") in diameter. There would be spaces between these stones where smaller pebbles would fit. We could add to the pile just enough smaller stones to fill the largest spaces. Now the spaces would be smaller yet, and even smaller pebbles could fill these holes; and so forth. Carried to an extreme, the pile would become nearly solid rock, and only a very small amount of cement would be needed to fill the remaining spaces and hold the concrete together. The resulting concrete would be very dense, strong, and economical.

It is extremely important that the aggregate and sand be clean. Silt, clay or bits of organic matter will ruin concrete if too much is present. A very simple test for cleanliness makes use of a clear wide-mouth jar. Fill the jar to a depth of 5cm with the fine aggregate (sand) and then add water until the jar is three-quarters full. Shake the mixture vigorously for a minute. The last few shakes should be sideways to let the sand level off. Then let it stand for three hours. If there is silt in the sand, it will form a distinct layer above the sand. If the layer of very fine material is more than 3mm deep, the concrete made from it will be weak.

If there is too much fine or silty material, another source of sand should be found. If this is impractical, it is possible to remove the fine particles. This can be done by putting the sand in a container like a drum. Cover the sand with water, stir or agitate vigorously,

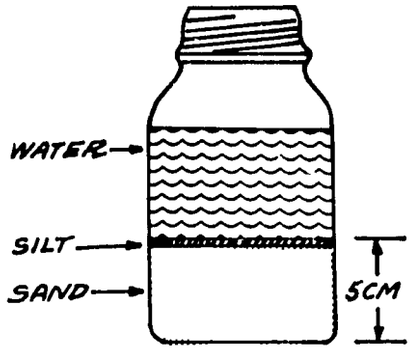

FIGURE 2

let it stand for a minute, then pour off the liquid. A few such treatments will remove most of the fine and organic matter.

In very dry climates, the sand may be perfectly dry. Very dry sand will pack into a much smaller volume than sand which is moist. If 2 buckets of water are added to 20 buckets of bone dry sand, you can carry away about 27 buckets of damp sand. If your sand is completely dry, add some water to it.

Another point to consider in selecting an aggregate is its strength. About the only simple test is to break some of the stones with a hammer. If the effort required to break the majority of stones is greater than the effort required to break a piece of concrete of about the same size, the aggregate will make strong concrete. If the stone breaks easily, the concrete made of these stones will be no stronger than the stones themselves.

Water

The water used to prepare concrete must be clean, and free of organic matter. Water acceptable for drinking is preferable. Any clear, fresh water is acceptable. Salt water may be used if fresh water is not readily available,

but it will reduce the strength of concrete about 15%.

If brackish or dirty water has to be used, a tablespoon of soap powder added to the water for every sack of cement used will compensate for much of the organic matter and other impurities in the water. It will also make the concrete more workable at lower water-to-cement ratios, which will produce stronger concrete. Dissolve the soap in a small amount of water and then add it to the mix.

Cement for concrete, if it is a United States brand, comes in 42.6kg (94 pound) sacks, and is 28.4 liters (exactly 1 cubic foot) in volume. It must be kept perfectly dry prior to use, or the chemical action will begin and the cement will be ruined.

Mixing the materials, getting them in place rapidly, tamping or compacting to a dense mixture, and proper curing are important parts of the construction process. These will be discussed in the sections on mixing and curing concrete.

Concrete reinforced with steel rods is used for structures such as large buildings and bridges. Proper design of reinforced concrete and placement of steel reinforcing is a complex procedure which requires the help of a trained engineer.

CALCULATING AMOUNTS OF MATERIALS FOR CONCRETE

Three methods are given here for finding the correct proportions of cement, water and aggregate for concrete:

1. A "Concrete Calculator" fold-out chart.
2. Using water to estimate proportions.
3. A "rule of thumb."

Concrete Calculator

The amounts of materials needed for a concrete construction job can be estimated quickly and accurately with the "Concrete Calculator" chart. The chart is given in both English (Chart A) and metric (Chart B) units.

Information Needed

To use one of the charts, you must know:

1. The area of concrete needed in square meters or square feet.
2. The thickness of concrete needed in centimeters (inches).
3. The kind of work to be done (see Definitions).
4. The wetness of the sand (see Definitions).

Using the "Concrete Calculator"

1. Make a light pencil mark on Scale 1, representing the area of concrete needed. If the volume is less than 400 liters or 15 cubic feet, multiply it by a convenient factor (for example, 10); then, when you find the amounts of materials the chart says to use, divide them by the same factor to get the actual amounts needed.
2. Make a similar mark on Scale 2, the slanted scale indicating thickness.
3. Draw a straight line through the two marks intersecting Scale 3 to find the volume of concrete needed.

   (If the shape of the area is complex, measure it in sections, add up the volumes of all the parts and mark the total volume on Scale 3.)
4. Mark the kind of work on Scale 4. A line through the marks on Scales 3 and 4 to Scale 5 will give the amount of fine aggregate needed.
5. Continue on a zig-zag course as shown in the KEY to calculate the rest of the materials.
6. Add 10% to the amounts indicated by the chart to allow for wastage and miscalculation.
7. If the mix is too wet or too stiff, see page 295 for instructions on adjusting it.

Materials can be measured in buckets. Most buckets are rated by the number of gallons they hold. To convert to liters, multiply gallons by 3.785. To convert to cubic feet: 1 cubic foot = 7.5 gallons. A 4-gallon bucket would hold 15.15 liters or 0.533 cubic feet.

Definitions

The definitions used in the chart are:

1. Kind of Work:

   "5" means "5-gallon paste" (5 gallons or 19 liters of water to

CONCRETE CALCULATOR

CHART A - ENGLISH UNITS

Kind of work - "5" means "5 gallon paste" which is concrete subjected to severe wear, weather, or weak acid and alkali solutions Examples would be the floor of a commercial dairy
- "6" means "6 gallon paste" for concrete to be watertight or subjected to moderate wear and weather Examples watertight basements, driveways septic tanks, storage tanks, structural beams and columns
- "7" means "7 gallon paste" for concrete not subjected to wear, weather or water Examples Foundation walls footings mass concrete etc where water tightness and abrasion resistance are not important

Fine Aggregate - Sand or rock screenings up to one quarter inch in diameter Should be free from fine dust loam, clay and vegetable matter or the concrete will have low strength Particles should vary in size, not all fine or coarse

Coarse Aggregate - Pebbles or broken rock from 1/4" up to 1-1/2" Nothing coarser than 3/4" should be used for a 5 gallon paste

Condition of Sand - Dry—feels slightly damp but leaves very little water on the hands
Average—feels wet, leaves a little water on the hands
Wet—dripping wet, leaves quite a bit of water on the hands

Gallons The chart is based on the U S Gallon (This is 0 835 of one Imperial Gallon)

Material From - Designed by John Bickford from data furnished by the Portland Cement Association of Chicago, Illinois, U S A

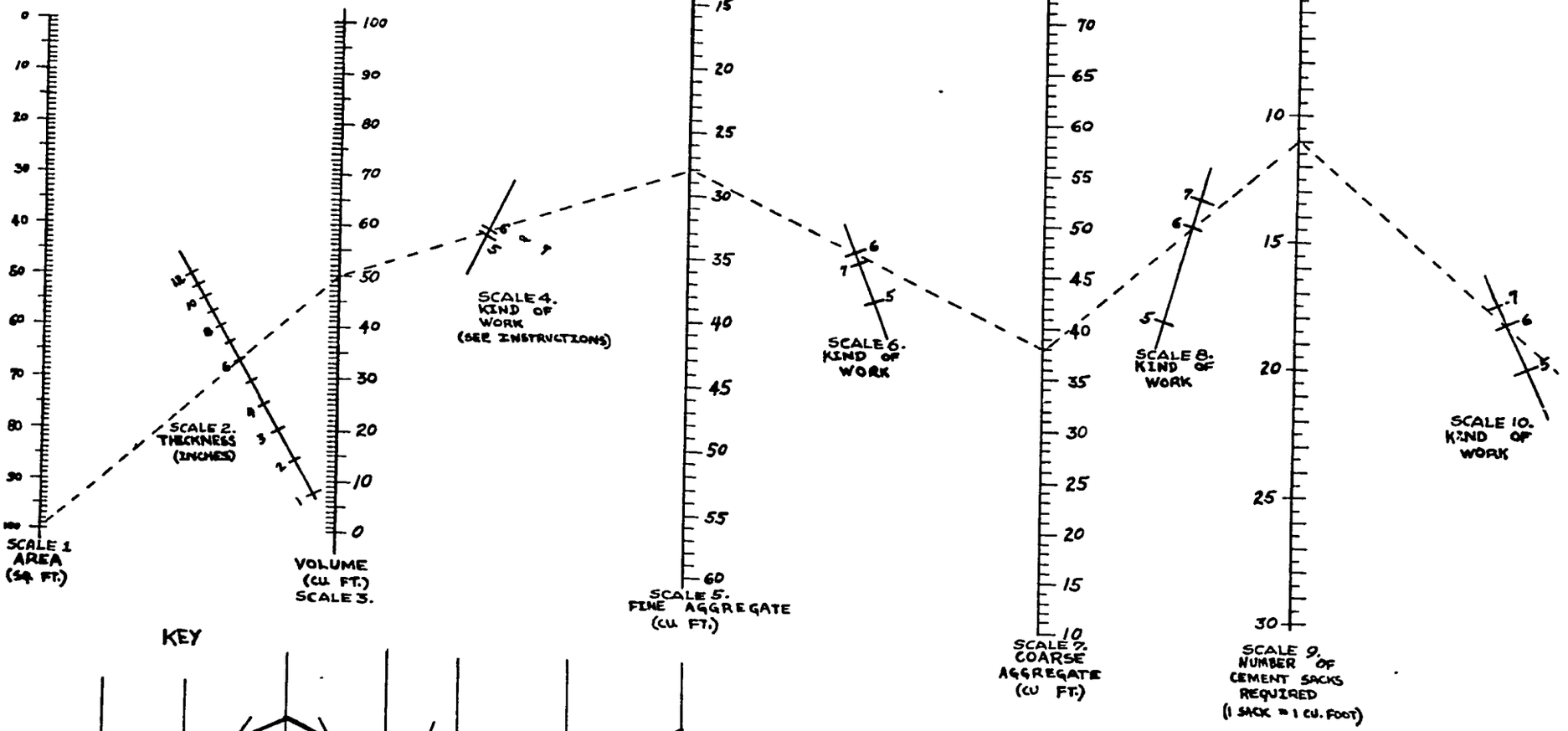

KEY

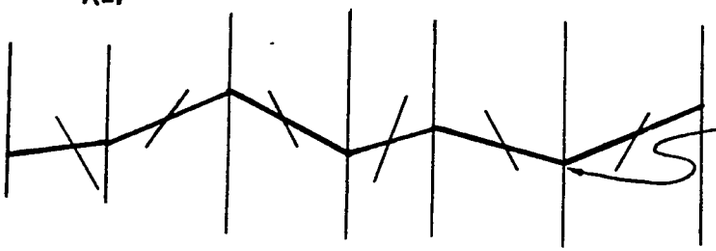

Note- use the number of sacks of cement required, and the kind of work to locate this point on the reference line. A line through this point and the condition of sand will give the amount of water needed.

DESIGNED BY JOHN BICKFORD FOR VOLUNTEERS FOR INTERNATIONAL TECHNICAL ASSISTANCE INC. 5/28/62

ETE CALCULATOR

CHART A - ENGLISH UNITS

An example: If the area is 100 square feet, the thickness is 6 inches, the "kind of work" is 6-gallon paste and the condition of the sand is average: the volume of the job will be 50 cubic feet and you will need 28 cubic feet of fine aggregate, 38 cubic feet of coarse aggregate, 12 cubic feet of cement and 52.5 gallons of water.

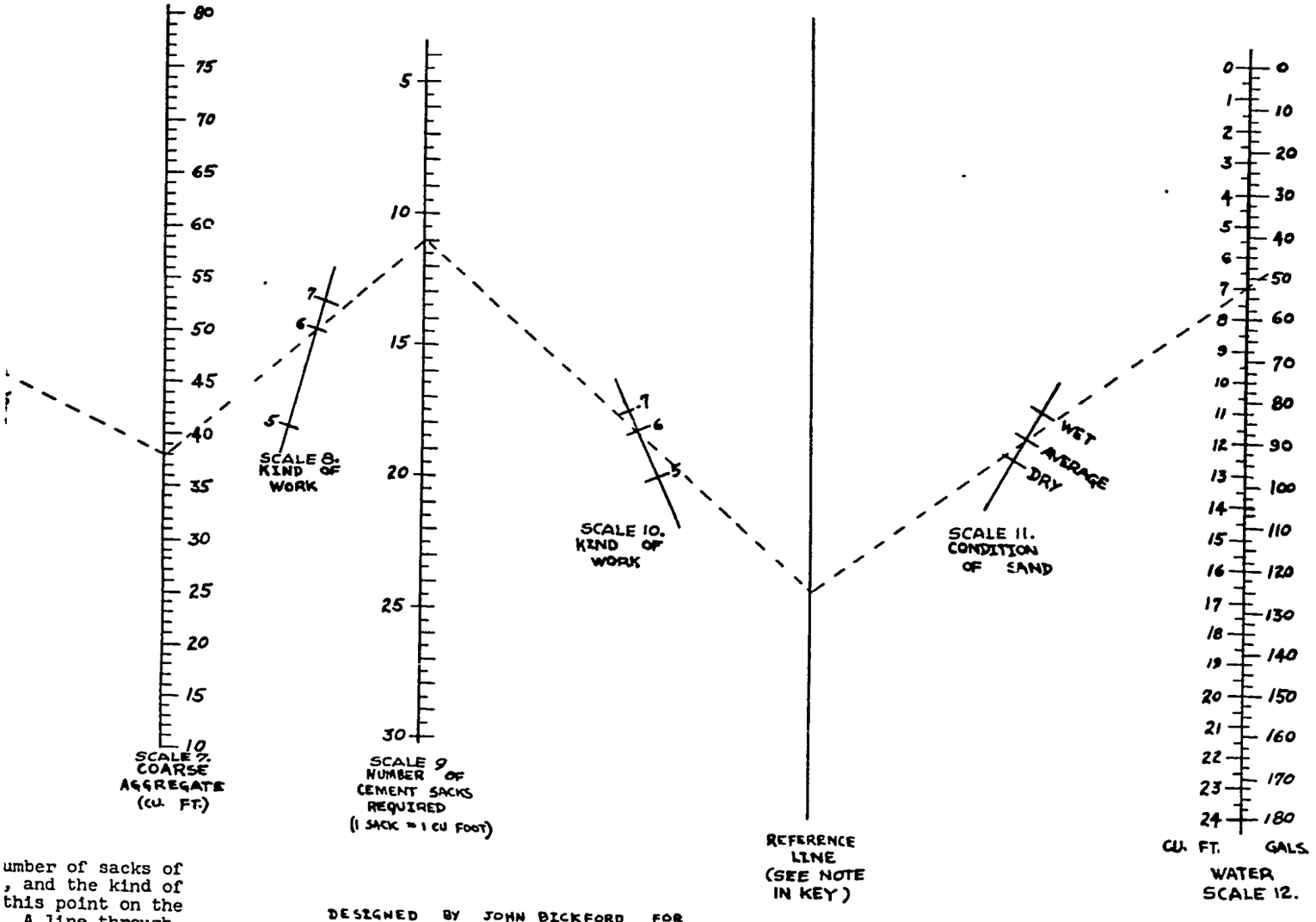

umber of sacks of
, and the kind of
this point on the
A line through
the condition of
the amount of wa-

DESIGNED BY JOHN BICKFORD FOR VOLUNTEERS FOR INTERNATIONAL TECHNICAL ASSISTANCE INC 5/28/62

CONCRETE CALCULATC

CHART B METRIC UNITS

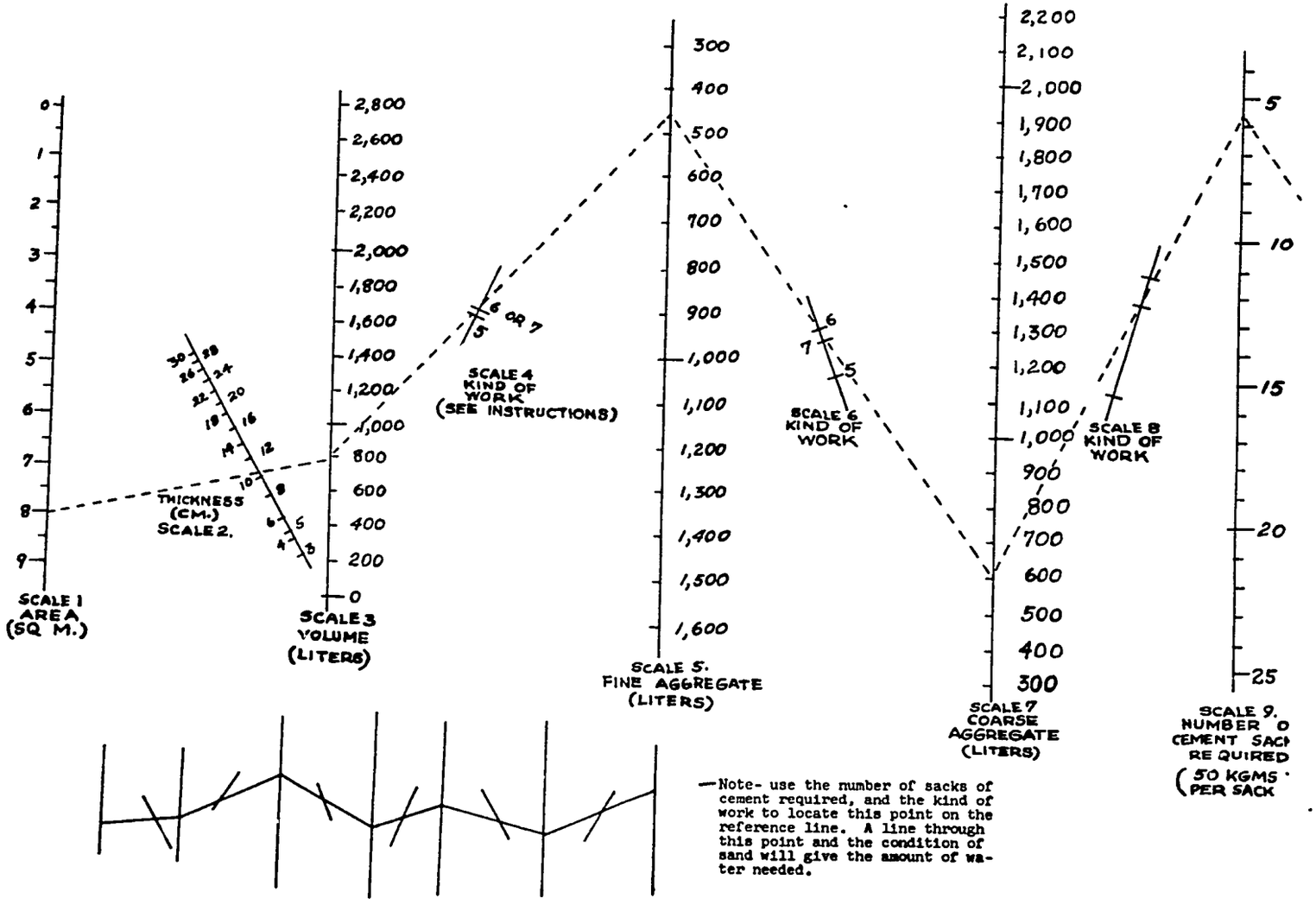

—Note- use the number of sacks of cement required, and the kind of work to locate this point on the reference line. A line through this point and the condition of sand will give the amount of water needed.

CONCRETE CALCULATOR

CHART B METRIC UNITS

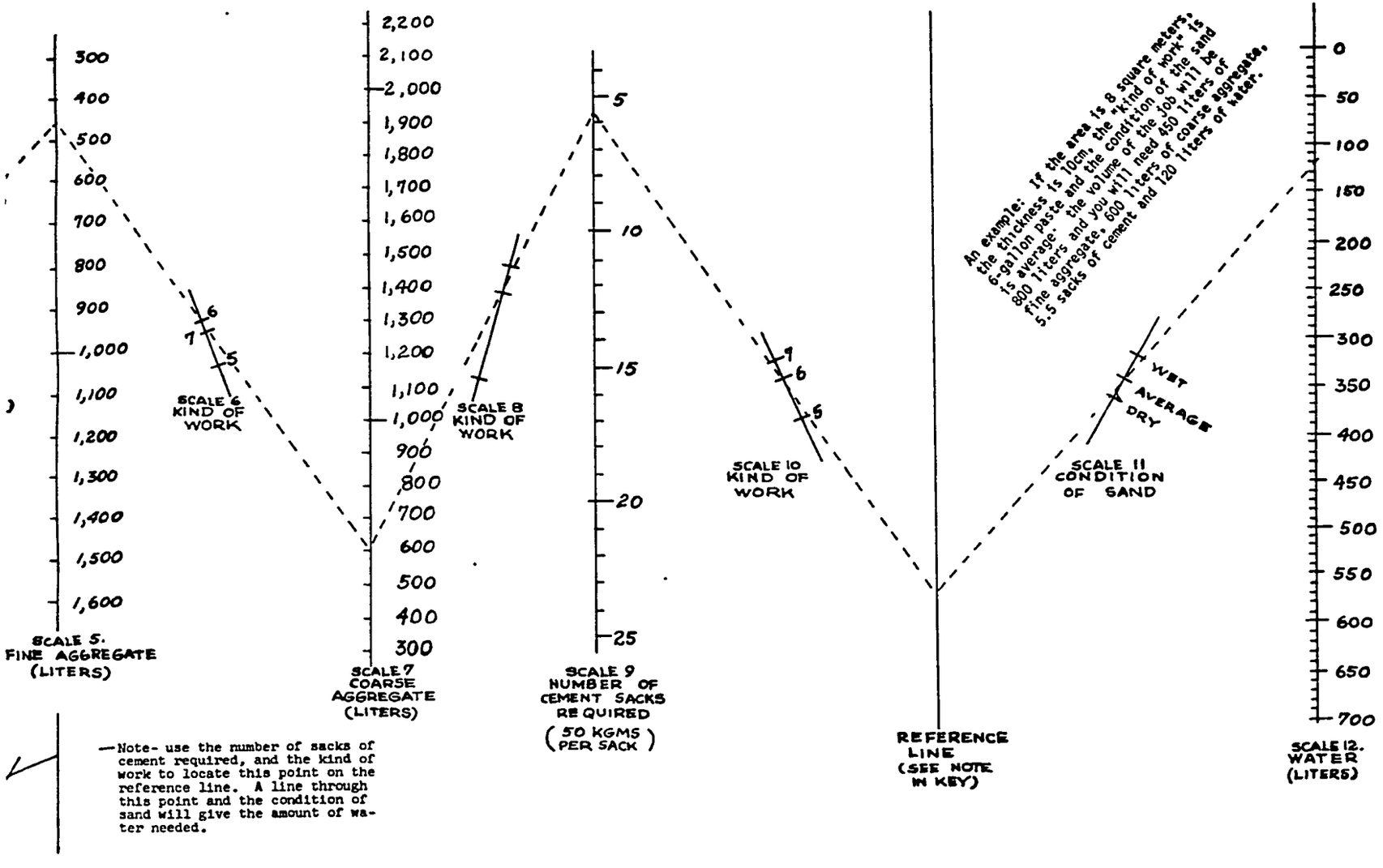

—Note- use the number of sacks of cement required, and the kind of work to locate this point on the reference line. A line through this point and the condition of sand will give the amount of water needed.

one sack of cement), for concrete subjected to severe wear, weather or weak acid and alkali solutions. An example is the floor of a commercial dairy.

"6" means "6-gallon paste," for concrete which is to be watertight or subjected to moderate wear or weather. Examples: watertight basements, driveways, septic tanks, storage tanks, structural beams and columns.

"7" means "7-gallon paste," for concrete not subjected to wear, weather or water. Examples: Foundation walls, footings and mass concrete where water tightness and abrasion resistance are not important.

2. Fine Aggregate:

Sand or rock screenings up to 0.5cm (1/4") in diameter. It should be free from fine dust, loam, clay and organic matter or the concrete will be weak. The particles should vary in size.

3. Coarse Aggregate:

Pebbles or broken rock from 0.5cm (1/4") up to 4 or 5cm (1 1/2" or 2"). Nothing larger than 2cm (3/4") should be used with a 5-gallon paste.

4. Condition of Sand:

Dry: feels slightly damp but leaves very little water on the hands.

Average: feels wet, leaves a little water on the hands.

Wet: dripping wet, leaves a lot of water on the hands.

Gallons: Chart A is based on the U.S. gallon (0.835 Imperial Gallon).

Alternate Method

The "Concrete Calculator" chart assumes that the aggregate is well graded. When the aggregate is not well graded, an alternate method can be used to find the correct proportions for a concrete mixture. The advantage of this method is that only a small sample of the ungraded aggregate needs to be divided into coarse and fine particles.

Well-graded aggregate seldom occurs naturally. Some "pre-mix" processing would be needed to grade it.

Remember that when you make concrete, you are filling the spaces in the aggregate with cement mortar or paste. The amount of cement paste needed can be found by adding water to a known volume of aggregate. To do this:

1. Divide a sample of the aggregate into coarse and fine particles by sifting it through a 0.5cm (1/4") screen.

2. Fill a pail with the coarse aggregate (dry).

3. Fill the pail with water. The amount of water used equals the amount of fine aggregate and cement paste needed to fill the spaces.

4. Into another pail, put an amount of fine aggregate equal to the volume of water used in Step 3.

5. Fill the pail with enough water to bring the water level to the top of the fine aggregate. The volume of water used equals the volume of cement paste needed to fill the remaining spaces.

   Add about 10 percent to this volume to allow for waste and to make the mix more workable.

6. To find the correct ratios of materials, divide the volume of cement paste needed into the volumes of fine and coarse aggregates.

7. Add these two ratios to get the ratio for ungraded aggregate. For example: If you are using a 19-liter (5-gallon) pail, and it takes 12.8 liters (3.4 gallons) of water to fill the pail in Step 3, put 12.8 liters (3.4 gallons) of fine aggregate in the second pail (Step 4). If Step 5 takes 6.4 liters (1.7 gallons) of water, this is the volume of cement paste needed. Divide this volume into the volumes of fine and coarse aggregates to get the ratios of materials:

$$\frac{\text{19 liters (coarse aggregate)}}{\text{6.4 liters (cement paste)}} = 3$$

$$\frac{\text{12.8 liters (fine aggregate)}}{\text{6.4 liters (cement paste)}} = 2$$

The sum of the two ratios is 5, so the ratio of ingredients in this case is 1:5, or 1 part cement paste to 5 parts ungraded aggregate, by volume.

See Definitions, page 288, to find the ratio of water to cement. For directions on adjusting a mixture which is either too wet or too stiff, see page 295.

"Rule of Thumb" Proportions

For a variety of small concrete construction tasks and for repair and patchwork, the following simple "rule of thumb" can be used as a simple guideline:

Use the ratio 1:2:3, by volume, to proportion the cement and aggregate and use a water-cement ratio of 6 to 1; that is, for every sack of cement (28.4 liters

or 1 cubic foot) used, add 56.8 liters (2 cubic feet) of fine aggregate and 85.2 liters (3 cubic feet) of coarse aggregate. Add 28.7 liters (6 gallons) of water for each sack of cement.

A home-made box of 28.4-liter (1-cubic-foot) volume will help in proportioning the mixture. The volume of concrete produced by a one-sack batch using the proportions given above will be about 142 liters (5 cubic feet).

The most common mistakes made by inexperienced persons are using too much cement, which increases the cost, and using too much water, which produces weak concrete.

See page 295 for directions on adjusting a mixture which is either too wet or too stiff.

Mixing Concrete By Machine or By Hand

Concrete must be thoroughly mixed to yield the strongest product. For machine mixing, allow 5 or 6 minutes after all the materials are in the drum. First, put about 10 percent of the mixing water in the drum. Then add water uniformly with the dry materials, leaving another 10 percent to be added after the dry materials are in the drum.

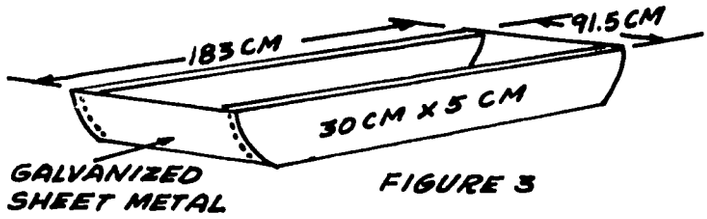

FIGURE 3

Mixing By Hand

On many self-help projects, the amount of concrete needed may be small or it may be difficult to get a mechanical mixer. Concrete can be mixed by hand; if a few precautions are taken, it can be as strong as concrete mixed in a machine.

Tools and Materials

Lumber, 2 pieces: 183cm x 91.5cm x 5cm (6' x 3' x 2")

Galvanized sheet metal: 183cm x 91.5cm (6' x 3')

Nails

Saw

Hammer

Or:

Concrete for a mixing floor: about 284 liters (10 cubic feet) of concrete is needed for a 244cm (8') diameter mixing floor which is 5cm (2") thick with a 10cm (4") high rim.

Shovel

The first requirement for mixing by hand is a mixing area which is both clean and water-tight. This can be a wood and metal mixing boat (see Figure 3) or a simple round concrete floor (see Figure 4).

The ends of the wood and metal mixing boat are curved to make it easier to empty. The raised edge of the concrete mixing floor prevents loss of water while the concrete is being mixed.

The procedure is:

1. Spread the fine aggregate evenly over the mixing area.
2. Spread the cement evenly over the fine aggregate and mix these materials by turning them with a shovel until the color is uniform.
3. Spread this mixture out evenly and spread the coarse aggregate on it and mix thoroughly again.

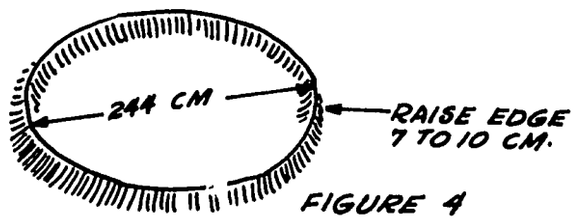

FIGURE 4

4. Form a hollow in the middle of the mixture and slowly add the correct amount of water and, again, mix thoroughly.

The mixture should be placed in the forms within 20 minutes after it is completely mixed.

When work is finished for the day, be sure to rinse concrete from the mixing area and the tools to keep them from rusting and to prevent cement from caking on them. Smooth shiny tools and boat surfaces make mixing surprisingly easier. The tools will also last much longer. Try to keep from getting wet concrete on your skin because it is caustic.

A workable mix should be smooth and plastic -- neither so wet that it will run nor so stiff that it will crumble.

If the mix is too wet, add small amounts of sand and gravel, in the proper proportion, until the mix is workable.

If the mix is too stiff, add small amounts of water and cement, maintaining the proper water-cement ratio, until the mix is workable.

Note the amounts of materials added so that you will have the correct proportions for subsequent batches.

If a concrete mix is too stiff, it will be difficult to place in the forms. If it is not stiff enough, the mix probably does not have enough aggregate, which is uneconomical.

Slump Cone

A "slump cone" is a simple device for testing a concrete mixture to see that it has the right proportion of materials.

Tools and Materials

Heavy galvanized iron sheet: 35.5cm x 63.5cm (14 1/8" x 25 1/2")

Iron strap: 3mm x 2.5cm x 7.5cm (1/8" x 1" x 3") 4 pieces

16 Iron rivets: 3mm in diameter and 6mm long

Wooden dowel: 16mm in diameter and 61cm long

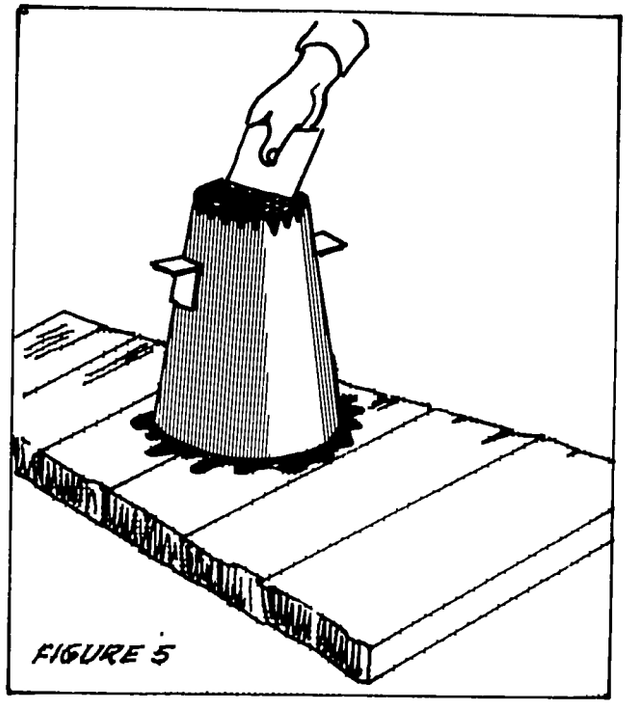

FIGURE 5

Testing

To perform the test:

1. Prepare the cone and rod (see Figures 6, 7 and 8).

2. Dampen the slump cone and set it on a flat, moist non-absorbent surface. Stand on the clips at the bottom of the cone to hold it down.

3. Fill the cone in three layers approximately equal in volume. Because the diameter at the bottom of the cone is large, the first layer should fill the cone to about one-fourth its height.

4. Stroke each layer 25 times with

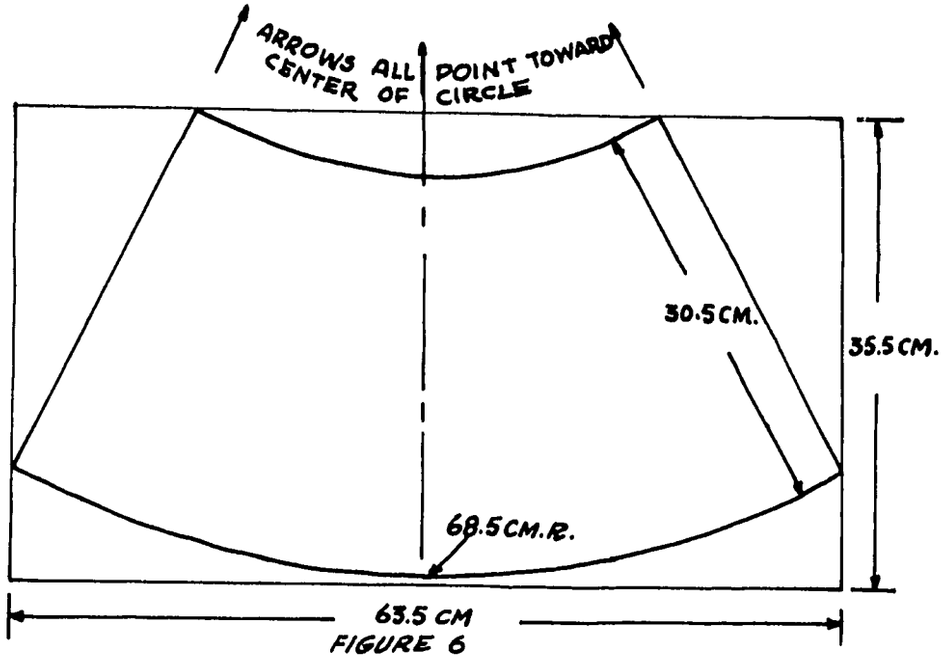

FIGURE 6

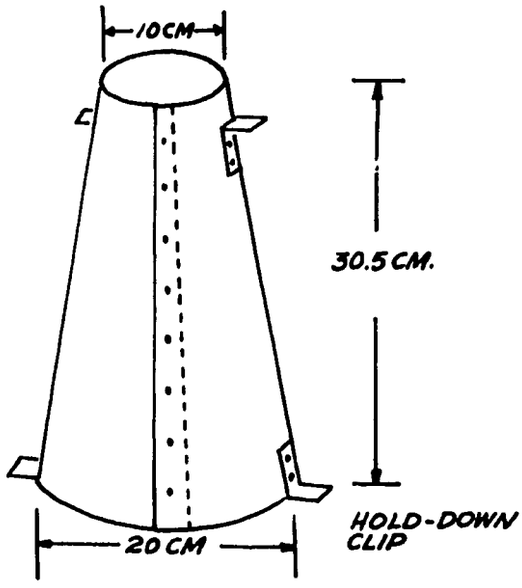

FIGURE 7

the wooden dowel.

5. After the top layer has been stroked with the dowel, smooth the surface of the concrete so the cone is filled exactly.

6. Carefully lift the cone off the concrete.

7. Place the cone alongside the concrete and measure the difference between the height of the cone and the height of the concrete. This difference is the slump.

Suggested slumps for various types of construction are:

Reinforced walls and footings: 5cm to 13cm (2" to 5")

Unreinforced walls and footings: 2.5cm to 10cm (1" to 4")

Thin reinforced walls, columns and slabs: 7.5cm to 15cm (3" to 6")

Pavements, walkways, culverts, drainage structures and heavy mass concrete: 2.5cm to 7.5cm (1" to 3")

Correcting the Mixture

If the slump is not within the desired range, or if the mixture is obviously either too fluid or too stiff, the proportions of the mixture must be changed. To make the mixture more fluid and increase the slump, increase the proportion of water and cement without changing the water-cement ratio. To make the mixture stiffer and decrease the slump, increase the proportion of the aggregates without changing the fine aggregate-coarse aggregate ratio. Do not add just water to make the mix more fluid; this will weaken the concrete.

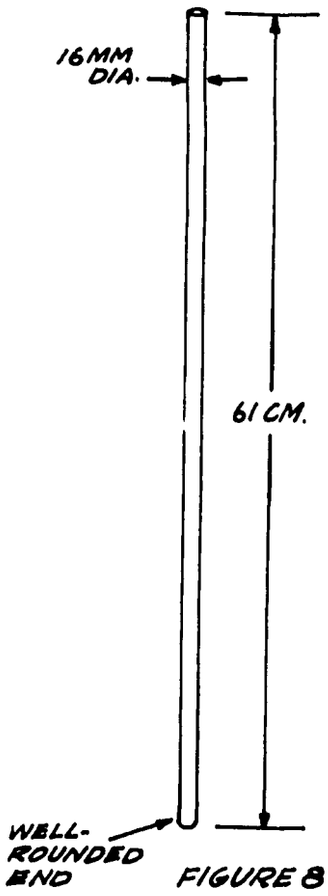

FIGURE 8

Making Forms for Concrete

Fresh concrete is heavy and plastic. Forms for holding it in place until it hardens must be well braced and should have a smooth inside surface. Cracks, knots, or other imperfections in the forms may be permanently reproduced in the concrete surface.

Wood is commonly used for forms, because of its light weight and strength. Since cracks between boards can mar the concrete surface, plywood, which has a special high-density overlay surface, is often used. The finish on plywood provides a smooth casting surface and makes it easier to remove the forms for reuse.

If unsurfaced wood is used for forms, oil or grease the inside surface to make removal of the forms easier and to prevent the wood from drawing too much water from the concrete Do not oil or grease the wood if the concrete surface will be painted or stuccoed.

Forms for flat work, such as pavements, may be 5cm x 10cm (2" x 4") or 5cm x 15cm (2" x 6") lumber, the size depending on the thickness of the slab. Stakes spaced 122cm (4') apart hold the forms in place.

Figures 9 and 10 show forms for straight-wall construction. To prevent the forms from bulging, opposite studs should be tied together with 10- to 12-gage wire which should be twisted to draw the form walls tight against wooden spacer blocks. (The blocks are removed as the concrete is placed.)

The ties should be spaced about 76cm

(2 1/2') vertically on the studs. When the forms are removed, clip the wires close to the concrete and punch them back. Pit holes caused by punching back the wires should be pointed up with mortar.

Forms should be easy to fill with concrete and easy to remove once the concrete has hardened. Screws or double headed nails which can be taken out easily can be a great help in removing wooden forms without damaging the concrete.

Forms are sometimes made of other materials. For example, metal forming is more economical for repeated work, such as curbs, slip forming for monolithic concrete tanks or silos, and reinforced concrete floors for multistory buildings.

The finest natural finish on a concrete surface can be obtained by casting on polyethylene. Sometimes polyethylene forms are used for decorative work, or a kraft paper with a polyethylene film surface is used as form liner.

Placing Concrete in Forms

To make strong structures, it is important to place fresh concrete in the forms correctly. The wet concrete mix should not be handled roughly when it is being carried to the forms and put in the forms. It is very easy, through jogging or throwing, to separate the fine aggregate from the coarse aggregate. Do not let concrete drop freely for a distance greater than 90 to 120cm (3' to 4'). Concrete is strongest when the various sizes of aggregates and

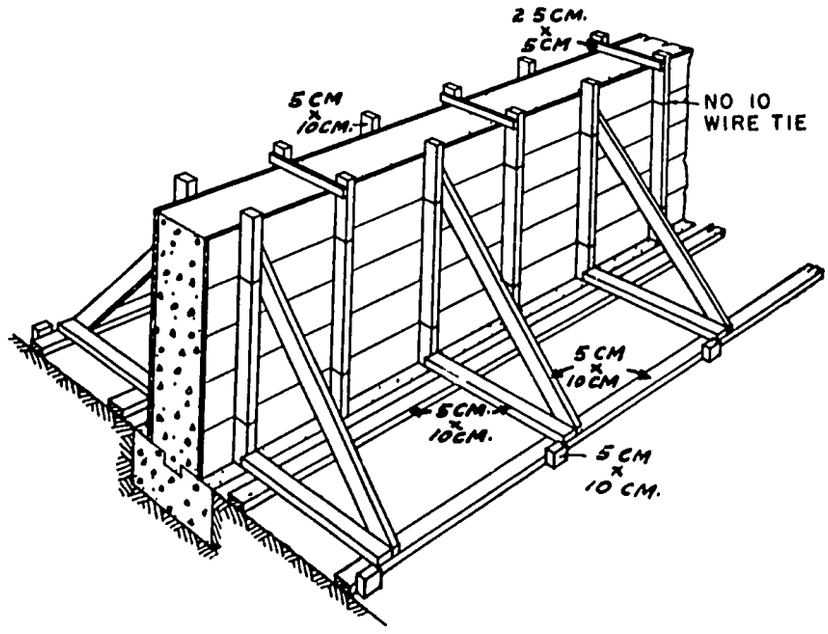

***Figure 9.*—Forms for a straight wall on level ground.**

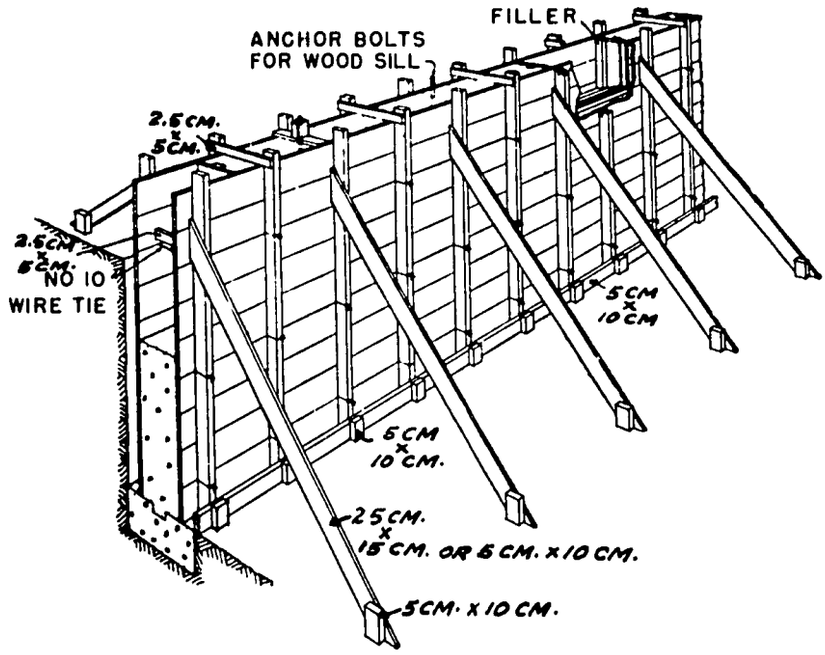

***Figure 10*—Forms for a basement or cellar wall. The earth can be used as the outside form if sufficiently firm.**

cement paste are well mixed. The concrete mix should be firmly tamped into place with a thin iron rod (about 2cm or 3/4" in diameter), a wooden pole or a shovel.

Curing Concrete

When the forms are filled, the hard work is done, but the process is not finished. The concrete must be protected until it reaches the required strength. It starts to harden almost immediately once the water is added, but the hardening action may not be complete for several years.

The early stage of curing is extremely critical. Special steps should be taken to keep the concrete wet. In temperate climates, the mixture should be kept wet for at least 7 days; in tropical and subtropical climates, it should be kept wet for at least 11 days. Once concrete dries, it will stop hardening; after this happens, re-wetting will NOT re-start the hardening process.

Newly-laid concrete should be protected from the sun and from drying wind. Large areas such as floors or walls which are exposed to the sun or wind should be protected with some sort of covering. Protective covers often used are: canvas, empty cement bags, burlap, palm leaves, straw and wet sand. The covering should also be kept wet so that it will not absorb water from the concrete.

Concrete is strong enough for light loads after 7 days. In most cases, forms can be removed from standing structures like bridges and walls after 4 or 5 days, but if they are left in place they will help to keep the concrete from drying out. In small ground-supported structures such as street drains, the forms can be removed within 6 hours of completion provided this is done carefully. Plans will usually

say if forms should be left in place longer.

Concrete reaches the strength for which it was designed after 28 days. Concrete which is moist cured for a month is about twice as strong as concrete which cures in the open air.

Making Quick-Setting Concrete

To produce quick-setting concrete with high initial strength, calcium chloride can be added to the concrete mixture.

Quick-setting cement is often useful; for example, when repeated castings are needed from the same mold. A concrete mixture which contains calcium chloride as an accelerator will set about twice as fast as a mixture which does not. The mixed batch must be put into the forms faster, but since quick-setting batches are usually small, this is not a problem. Calcium chloride does not lessen the strength of fully-cured concrete.

No more than 1kg (2 pounds) of calcium chloride should be used per sack of cement. It should be used only if it is in its original containers, which should be moisture-proof bags or sacks or air-tight steel drums.

The best way to add the calcium chloride is to mix up a solution containing 1/2kg per liter (1 pound per quart) of water. Use this solution as part of the mixing water at a ratio of 2 liters (2 quarts) per sack of cement (42.6kg or 94 pounds).

Useful Sources of Information on Concrete

Useful sources of information on concrete, including how-to-do-it manuals are:

Portland Cement Institute
18 Kew Road
Richmond
Johannesburg, South Africa

Instituto del Cemento Portland Argentino
San Martin 1137
Buenos Aires, Argentina

Cement and Concrete Association of Australia
147-151 Walker Street
North Sydney, Australia, N.S.W.

Associacao Brasileria de Cimento Portland
Caixa Postal 30886
Sao Paulo, Brazil

Cement and Concrete Association
52 Grosvenor Gardens
London, S.W. 1, England

The Concrete Association of India
P. O. Box 138
Bombay 1, India

Portland Cement Association
33 West Grand Avenue
Chicago, Illinois 60610
U.S.A.

Sources for the Section on Concrete:

VITA Volunteers:

John Bickford, Connecticut
Robert D. Cremer, New York
Kenneth D. Hahn, California
R. B. Heckler, Florida

A Building Guide for Self-Help Projects,

Department of Social Welfare and Community Development, Accra, Ghana. 1961.

Design and Control of Concrete Mixtures,

Portland Cement Association, 33 West Grand Avenue, Chicago, Illinois 60610, U.S.A.

Use of Concrete on the Farm, Farmers' Bulletin No. 2203, U.S. Department of Agriculture. Revised May 1965. For sale by the Superintendent of Documents, U.S. Government Printing Office, Washington, D.C. 20402, U.S.A. Price 15 cents.

Other Useful Publications:

Basics of Concrete, Ideas and Methods Exchange No. 49, U.S. Department of Housing and Urban Development, Division of International Affairs, Washington, D.C., U.S.A.

Concrete Technology: Student Manual, Delmar Publishers, Albany, New York, U.S.A.

Making Quality Concrete for Agricultural and Home Structures, by Wesley Hobbs, Head of Agricultural Technology, Haile Sellassie I University, Addis Ababa, Ethiopia.

Bamboo Construction

Bamboo is one of the oldest materials used by men to increase comfort and well-being. In today's world of plastics and steel, besides continuing to make its traditional contributions, bamboo is growing in importance. Outstanding varieties of bamboo from throughout the world are being tested to find out how they can contribute to local economies.

As the best species are identified and disseminated, their use will help to improve the lives of many. With a few plants of superior bamboos in the backyard, a family will have at hand the wherewithal to fence the garden, build a pigpen or chicken coop or add a room to the house. The family will also be able to increase its daily income by making baskets or other specialties for sale or exchange.

Bamboos are prominent elements in the natural vegetation of many parts of the tropical, subtropical and mild temperate regions of the world, from sea level to altitudes of more than 13,000 feet (4000m). Men have widened the distribution of many species of bamboo. But some of the more valuable species have not been distributed as much as they could be. Much remains to be done to make these varieties more generally known and available.

Bamboo can be prepared for use in construction with simple tools. Once prepared, bamboo can be used extensively in the construction of houses: in making foundations, frames, floors, walls, partitions, ceilings, doors, windows, roofs, pipes and troughs. For further detail, see Bamboo as a Building Material, by F. A. McClure.

Figure 1.--From supporting posts to rafters and sheathing, this cottage in the Ecuadoran lowlands is made entirely of native bamboo, Guadua angustifolia. The posts may serve for five years; the siding may remain in serviceable condition for decades.

The entries which follow explain:

1. Splitting Bamboo
2. Bamboo Joints
3. Bamboo Preservation
4. Making Bamboo Board
5. Bamboo Walls, Partitions and Ceilings

SPLITTING BAMBOO

To prepare bamboo for use in construction, the culms (stems) must be carefully split.

Tools and Materials

Iron or hardwood bars, 2.5cm (1") thick

Ax

Steel Wedges

Wooden posts

Splitting knives (see Figures 1 and 4)

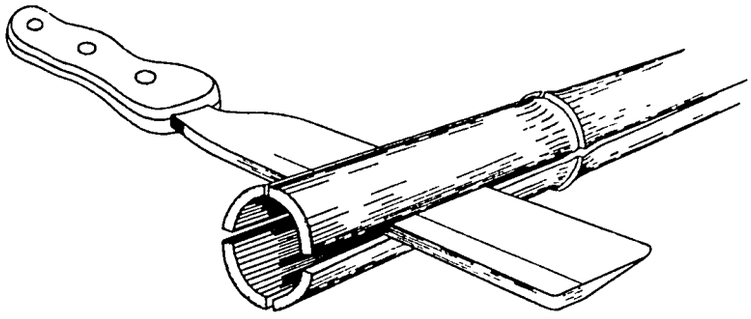

FIGURE 2

Several devices can be used for splitting culms. When bamboo is split, the edges of the bamboo strips can be razor-sharp; they should be handled carefully.

For splitting small culms to make withes (strips) for weaving and lashing:

1. Use a splitting knife with a short handle and broad blade to make four cuts, at equal distances from each other, in the upper end of the culm (see Figure 2).

2. Split the culm the rest of the way by driving a hardwood cross along the cuts (see Figure 3).

3. Using a long-handled knife (see Figure 4), cut each strip in half (see Figure 5). A strip of bamboo can be held on the blade to make it thicker and speed up the work.

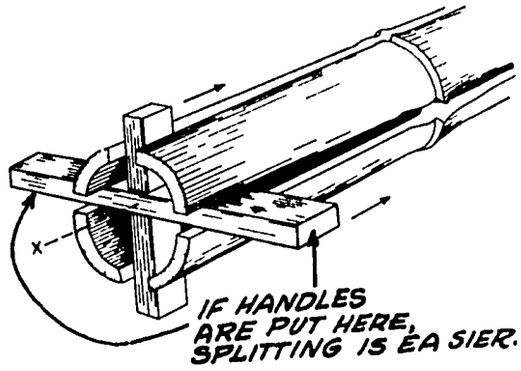

FIGURE 3

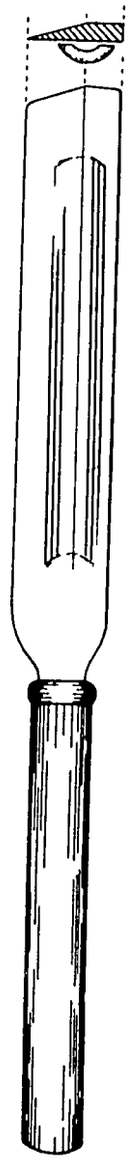

FIGURE 4

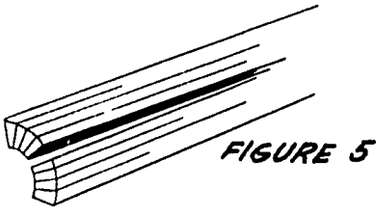

FIGURE 5

4. Use the same knife to split the soft, pithy inner strip from the hard outer strip (see Figure 6). The inner strip is usually discarded.

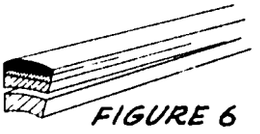

FIGURE 6

To split heavy culms:

1. Build a cross of iron or hardwood bars about 2.5cm (1") thick, and place it on firmly set posts about 10cm (4") thick and 90cm (3') high (see Figure 7).

2. At the top end of the culm, use an ax to make two pairs of breaches at right angles to each other (see Figure 7).

3. Hold the breaches open with steel wedges placed a short distance from the end of the culm, until the culm is on the cross as shown in Figure 7.

4. Push and pull the culm until the cross splits the whole culm.

5. To split the culms again after they are split into four strips, use a simple steel wedge mounted on a post or block of wood (see Figure 8).

6. Paired wedges solidly mounted on a block or heavy bench can be used to split strips into three narrower strips (see Figure 9).

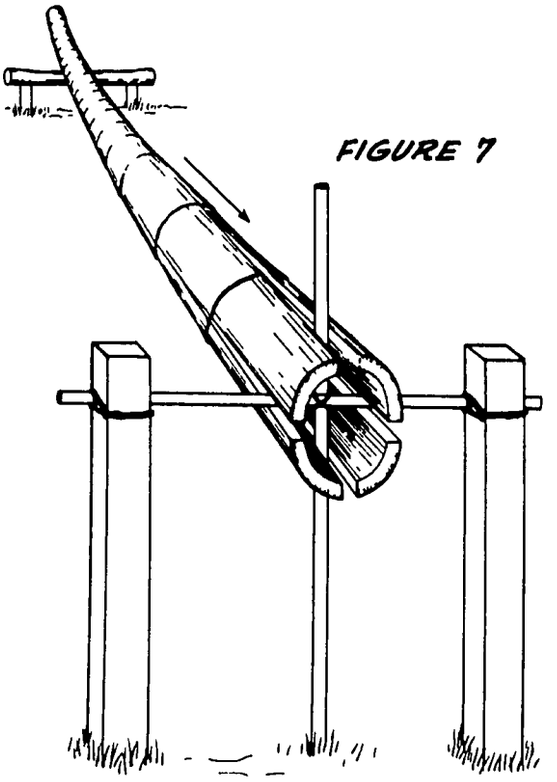

FIGURE 7

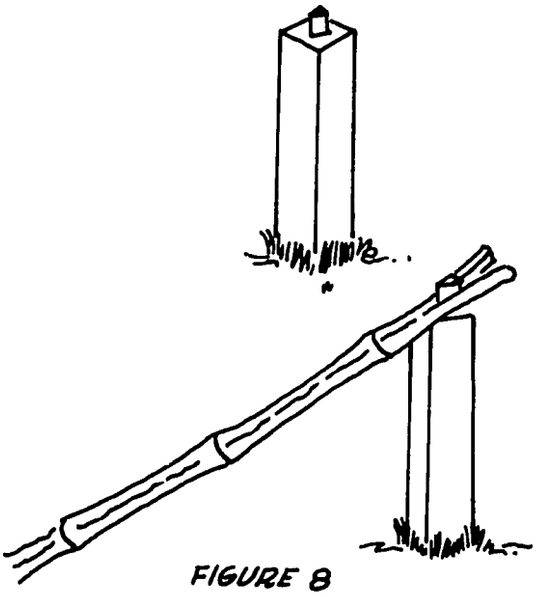

FIGURE 8

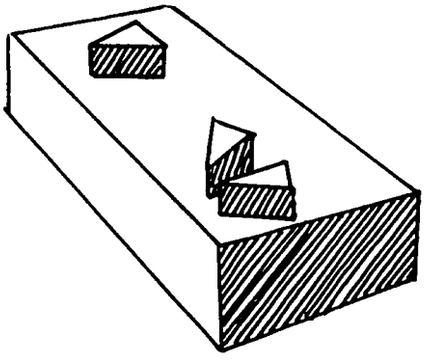

FIGURE 9

BAMBOO JOINTS

A number of methods of joining bamboo for making implements or for construction are shown in Figures 10 and 11.

Tools and Materials

Bamboo

Lashing material: cord or wire

Machete, hacksaw, knife, drill and other bamboo working tools

Bamboo is useful for heavy construction because it is strong for its weight. This is because it is hollow with the strongest fibers on the outside where they give the greatest strength and produce a hard attractive surface. Bamboo has solid diaphragms across each joint or node, which prevent buckling and allow the bamboo to bend considerably before breaking.

Any cut in the bamboo, such as a notch or mortise, weakens it; therefore, mortise and tenon joints should not be used with bamboo. However, notches or saddle-like cuts can be made at the upper ends of posts which hold cross pieces (see Figure 10, C and D).

Bamboo parts are usually lashed together because nails will split most culms. The withes (strips) for lashing are often split from bamboo and sometimes from rattan. When all local bamboo yields brittle withes, lashing must be done with bark, vines or galvanized iron wire.

In bending bamboo--for example, for the "Double Butt Bent Joint" in Figure 11--you can help to keep the bamboo from splitting by boiling or steaming it and bending it while it is hot.

Local artisans often know the best species of bamboo and they have frequently worked out practical methods for making joints.

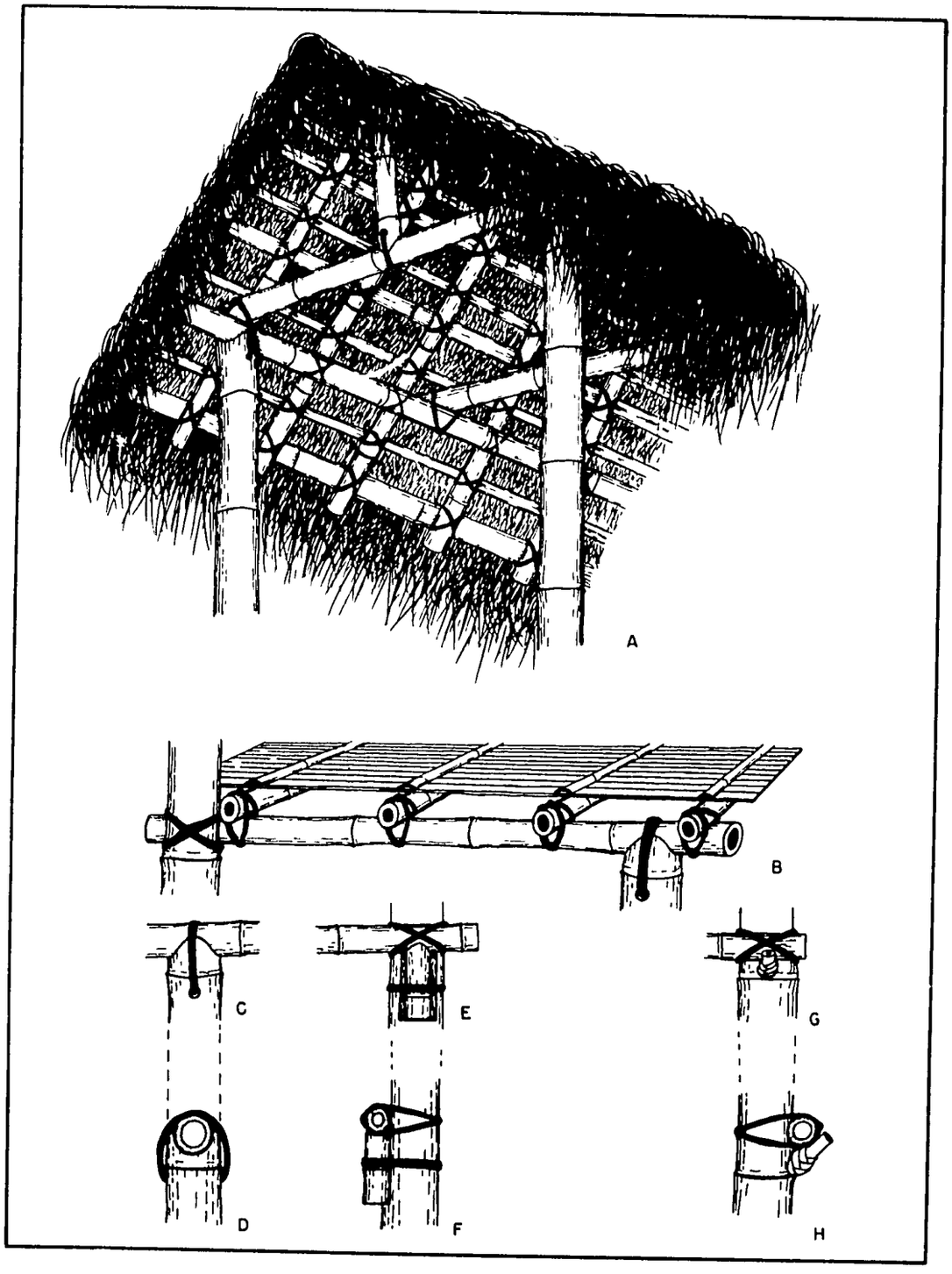

Figure 10 --Details of bamboo construction: A, fitting and binding culms at joints in roof and frame; B, fitting and securing bamboo boards of floor; C and D, saddle joint; E and F, use of inset block to support horizontal load-bearing elements; G and H, use of stump of branch at node of post to support horizontal load-bearing elements.

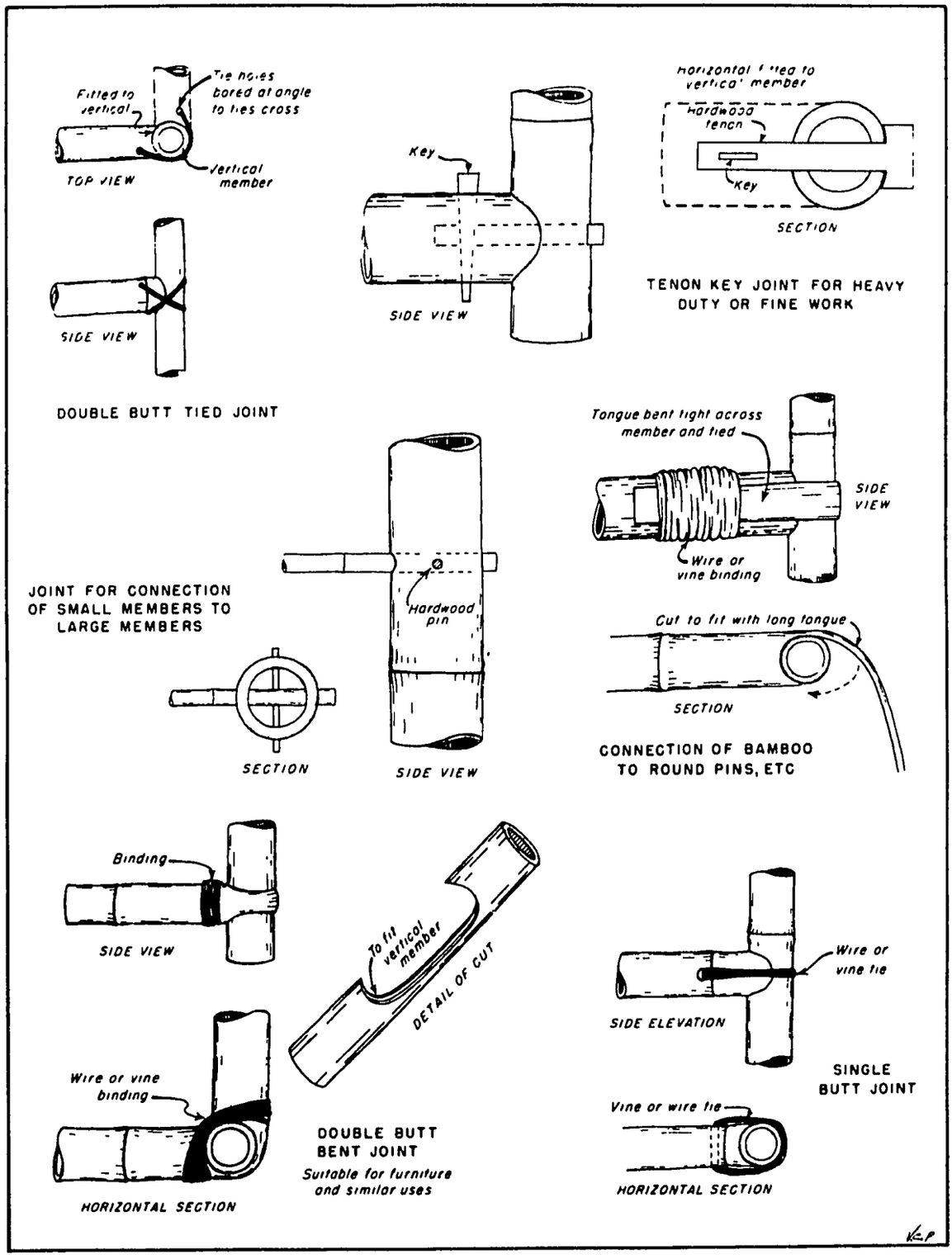

Figure 11--Joints used in building with bamboo.

BAMBOO PRESERVATION

Most bamboos are subject to attack by rot fungi and wood-eating insects. Bamboos with higher moisture and starch content seem to be more prone to attack. There are many methods for making bamboo more resistant to attack. A simple method, which combines proper curing and the use of DDT, is described here.

If bamboo is to be used to hold food or water, the only treatment recommended is immersion of green bamboo in a borax-boric acid solution (see Bamboo Piping).

Tools and Materials

Machete and hacksaw for felling and trimming bamboo culms

Mixture of 5 percent DDT and 95 percent talc. If talc is not available, other dry dusty materials such as dry clay can be used.

Dusting bag (made from cloth with an open weave)

Bamboo should not be cut before it is mature. This is usually the end of the third season. Freshly-cut bamboo culms should be dried for 4 to 8 weeks before being used in building.

A clump-curing process tested by the U. S. Department of Agriculture Federal Experiment Station in Puerto Rico helps to reduce attack by insects and rot fungi. The steps are:

1. Cut the bamboo off at the base, but keep it upright in the clump.

2. Dust the fresh-cut lower end of the culm at once by patting it with a dusting bag filled with the DDT-talc mixture. An alternative method of dusting is to dip the ends of the culms into a tray which has a layer of the mixture.

3. To keep the bamboo from being stained or rotted by fungi, raise each culm off the ground by putting a block of stone, brick or wood under it.

4. Leave the culms in this position for 4 to 8 weeks, depending on whether the weather is dry or damp.

   The culms should be as dry as possible before being placed near buildings, where wood eating insects usually are.

5. When the culms have dried as much as conditions will permit, take them down and trim them. Dust all cut surfaces immediately with the DDT-talc mixture.

6. Finish the seasoning in a well-aired shelter where the culms are not exposed to rain and dew. Rain will stain the culms when they become dry.

   This method will prevent damage by wood-eating insects while the culms are drying.

If the bamboo is to be stored for a long time, stacks and storage shelves should be sprayed every six months with 5 percent DDT mixed in water or light oil. Local conditions may shorten or lengthen the time between sprayings.

In both storage and use, bamboo culms are best preserved when they are protected against rain in a well-ventilated place where they do not touch the ground.

BAMBOO BOARDS

Bamboo culms can be split and flattened to form boards for use in sheathing, walls or floors.

Tools and Materials

Machete

Ax--lightweight, with a wedge-shaped head

Spud--a long-handled shovel-like implement with a broad blade set at an angle to work parallel to the surface of the board

Large bamboo culms

Figure 12.--An ax with a well-greased bit is used in Ecuador for making bamboo boards. Each node is split in several places; then with one long split, the culm is spread wide open. Not used for boards is the thick-walled basal part of the culm.

Figure 13.--Final step in making a bamboo board--removing diaphragm fragments from the newly opened culm. It may be done with a machete, as here, or with an adze or a long-handled, shovellike curved spud.

Not all of the tools listed above are necessary, but they speed up the work when a large quantity is being produced.

1. Remove the thick-walled lower part of the culm.

2. Use an ax with a well-greased blade to split each node of the culm in several places (see Figure 12). This should be done carefully to avoid injuring one's feet.

3. Spread the culm wide open with one long split.

4. Remove the pith at the joints with a machete, adz or spud (see Figure 13).

5. Store the boards as shown in Figure 14.

Figure 14.--Bamboo boards stand ready for use. The making of these boards is a well-developed trade in both Ecuador and Colombia; and the finished product might well become an export item.

BAMBOO WALLS, PARTITIONS AND CEILINGS

Bamboo buildings can be built to meet a variety of requirements for strength, light, ventilation and protection against wind and rain. A few of the methods of building with bamboo are described here.

The parts of a building which are not usually made from bamboo are the foundation and the frame.

Both split and unsplit bamboo culms are used in building. They can be used either horizontally or vertically. Culms which are exposed to the weather, however, will last longer if they are vertical because they will dry better after rain.

Tools and Materials

Local bamboos

Bamboo-working tools, such as machete, hacksaw, chisel, drill

Lashing material: wire or cord

Nails

Barbed wire

Plaster or stucco

Figure 15.--Wide bamboo strips support and protect an adobe wall in El Salvador, forming a type of construction called bajareque in many Latin American countries. In El Salvador the common bamboo, Bambusa vulgaris, is available everywhere except in the driest areas, and its culms are standard material for many purposes.

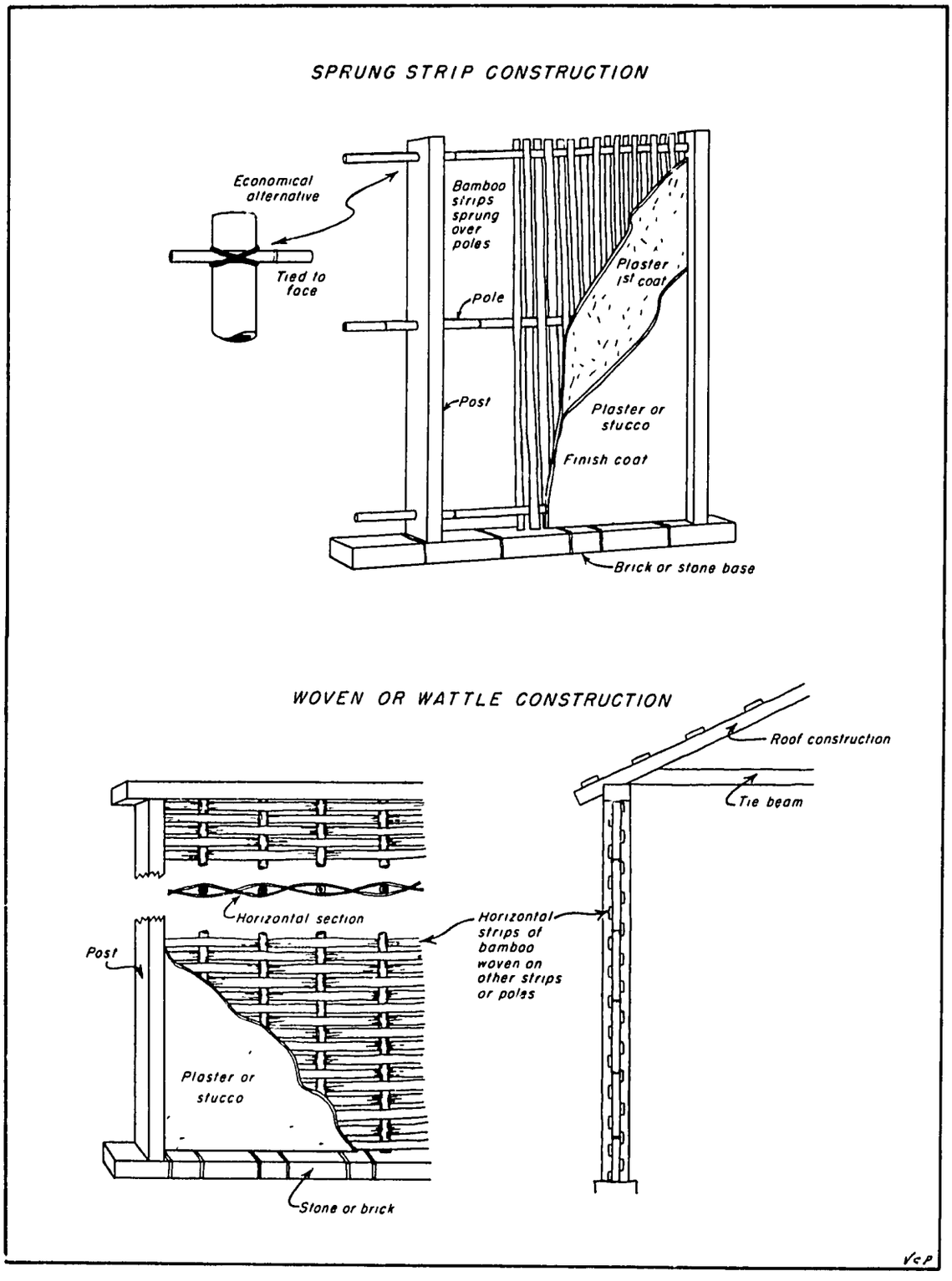

Figure 16 -- Types of wall construction used with bamboo.

Walls

A method commonly used in Ecuador for making walls is to lash wide bamboo strips or thin bamboo culms, horizontally and at close intervals, to both sides of hardwood or bamboo uprights. The spaces between the strips or culms are filled with mud alone or with mud and stones (see Figure 15).

In Peru, flexible bamboo strips are woven together and then plastered on one or both sides with mud (see Figure 16).

An attractive but weaker wall can be built by using bamboo boards, stretched laterally as they are attached, as a base for plaster or stucco. Barbed wire can be nailed to the surface to provide a better bond for the stucco. The exterior can be made very attractive by whitening it with lime or cement.

Partitions

Partitions are usually much lighter and weaker than walls. Often they are no more than a matting woven from thin bamboo strips and held in place by a light framework of bamboo poles. Bamboo matting is often used to finish ceilings and both interior and exterior walls; bamboos with thin-walled, tough culms are usually used for this.

Ceilings

Ceilings can be built with small, unsplit culms placed close together or with a lattice of lath-like strips split from larger culms. There should be some space to let smoke from kitchen fires escape.

Source:

Bamboo as a Building Material, by F. A. McClure, Foreign Agricultural Service, U. S. Department of Agriculture, 1953; reprinted 1963 by Office of International Housing, Department of Housing and Urban Development, Washington, D.C. 20410, U.S.A. Lists selected references.

Other Useful Publications:

Bamboo in the Economy of Oriental Peoples, by F. A. McClure. Smithsonian Institution, Washington, D. C. 1958.

"Utilization of Bamboos" by A. Purushotham, Forest Research Institute, Dehra Dun, India. Reprinted from the Journal of the Timber Dryers' & Preservers' Association of India, Vol. IX, No. 2 (April 1963).

Sources of information on bamboo are:

Forestry Division
Joint Commission on Rural Reconstruction
37 Nan Hai Road
Taipei, Taiwan

Forest Research Institute
P. O. New Forest
Dehru Dun, India

Tropical Products Institute
56-62 Grays Inn Road
London, WC 1
England

Federal Experiment Station in Puerto Rico
U. S. Department of Agriculture
Mayaguez, Puerto Rico

Glues

CASEIN GLUE

Strong, water-resistant casein glue, which produces joints as strong as or stronger than most of the common species of wood, is made from skim milk and common chemicals. Casein glue joints are water-resistant but not waterproof. They will withstand occasional soaking; but, if they are repeatedly soaked and dried, they will fail.

Tools and Materials

Mixer: paddle and bowl

Containers

Scale or balance

Skim milk

Hydrated lime, $Ca(OH)_2$, also known as slaked lime. This should be a good quality lime: high in calcium and low in magnesia.

Silicate of soda, also called "waterglass" and sodium silicate. The preferred solution should have a density of about 40 degrees Baume (Density 1.38) with a ratio of silica to soda of approximately 3.25 to 1.

Cupric chloride, $CuCl_2$ (cupric sulfate, $CuSO_4$, also called "blue vitreol" can be substituted)

Wire screen or 20-mesh sieve with 0.033" (0.84mm) openings

Cloth for squeezing moisture out of curds

Making Casein

Casein powder is made from skim milk by the following steps:

1. Let the milk sour naturally or sour it by slowly adding dilute hydrochloric or sulfuric acid until curds form. The milk will separate into curd and whey.
2. Drain the whey off, and then wash the curd by adding water and draining it off.
3. Press the curd in a cloth to remove most of the moisture.
4. Break the curd into small particles and spread it out to dry.
5. Grind the dry curd to a powder and pass it through a 20-mesh screen.

Proportions for Glue

Formula 11 (not restricted by patent), U. S. Forest Products Laboratory:

	Parts by Weight
Casein (powder)	100
Water	150 to 250
Hydrated Lime (powder)	20 to 30
Water	100
Silicate of soda (solution)	70
Cupric chloride (powder)	2 to 3
Water	30 to 50

If hydrated lime is not available, quicklime (CaO) can be used in the following ways:

A mixture of 15.1 parts CaO and 104.9 parts water by weight can be substituted for 20 hydrated lime and 100 water.

A mixture of 23.5 CaO and 106.5 water can substitute for 30 hydrated lime and 100 water.

When CaO is added to the water, it must be stirred for 15 minutes to get a uniform slurry.

Mixing Casein Glue

The bowl and paddle for mixing casein glue should be made of wood, iron or some

other material which will not be corroded by the alkali in the glue and can be cleaned easily. All the ingredients should be weighed rather than measured by volume so that the proportions will be accurate. It is especially important not to use too much water.

1. Put the casein and water in the mixing bowl and mix them well enough to distribute the water throughout the casein. If the casein used has been ground to pass through a 20-mesh screen, let it soak in the water for 15 to 30 minutes before going on to the next step. The soaking period can be reduced if the casein is ground more finely.

2. Mix the hydrated lime and water in a separate container.

3. Dissolve the cupric chloride in water in a separate container and add it, while stirring, to the moistened casein.

4. Immediately pour the hydrated lime-water mixture into the casein mixture. When casein and lime are mixed, large lumps form at first but they break up rapidly and finally disappear. The solution becomes somewhat thinner. Thorough stirring is very important at this point.

5. About a minute after the lime is mixed with the casein, the glue begins to thicken. Add the silicate of soda at this time.

6. The glue will thicken momentarily, but continue stirring the mixture until the glue is free of lumps. This should take no longer than 20 minutes.

   If the glue is a little too thick, a small amount of water can be added. If it is too thin, start the whole process over again, using a smaller proportion of water.

Using Casein Glue

The working life of glue is the length of time it stays fluid enough to be workable. The silicate of soda extends this time. The glue produced by the formula used here will be useable for more than 7 hours at temperatures between 21C and 24C (70F and 75F). Working life will be shorter at higher temperatures.

Casein glue is fluid enough to be spread by a roll spreader or by hand with a brush or scraper. Very heavy spreads are wasteful because excess glue will be squeezed from the bond. Very light spreads can produce weak joints. A suggested minimum is 29.5 kilograms (65 pounds) of wet glue per 92.8 square meters (1,000 square feet) of glue-joint area.

To obtain good contact between wooden members of a joint, apply pressure while the glue is still wet. There is not much drying before 15 or 20 minutes. Under ordinary circumstances, a pressure of 105,450 to 140,600 kilograms per square meter (150 to 200 pounds per square inch) will give good results.

If casein glue joints are exposed for long periods to conditions which favor the growth of molds, they will eventually fail. The joints will be permanent only if the moisture content of the wood is not greater than 18 to 20 percent for long or repeated periods.

Dry casein can be kept for a long time in a cool, dry place.

Sources:

Casein Glues: Their Manufacture, Preparation, and Application, Forest Products Laboratory, Forest Service, U.S. Department of Agriculture, Madison, Wisconsin.

Dr. Louis Navias, VITA Volunteer, Schenectady, New York

PREPARATION OF LIQUID FISH GLUE

Cold liquid glue can be made from the heads, skins and skeletal wastes of cod, haddock, mackerel, hake and pollack. A great advantage of liquid fish glue is that it remains in liquid form and consequently has an almost permanent working life. An advantage of using it to make wood joints is that it sets slowly and therefore penetrates further than other glues before hardening.

Since liquid fish glues are not very water-resistant, a casein or other glue should be used where water-resistance is needed. Thick fish glues produce stronger joints than thin solutions.

Tools and Materials

Fish heads, skins and skeletal waste

Large pan for washing fish parts

Steam bath or double boiler

Paddle for stirring

Filter, such as cheese cloth

Making the Glue

1. Wash the fish material thoroughly to remove blood, dirt and salt. If salted fish are used, wash them in running water for 12 hours.

2. Once the material is washed and drained, put it into a large container cover it with water and cook it slowly at a low temperature, about 60C (140F). Cooking in an open pot helps to eliminate unpleasant odors in the glue. A steam bath or double boiler should be set up so that live steam surrounds the pot. Stir the contents occasionally. The length of the cooking period varies with the kind of fish material used.

3. Let the cooked mixture settle, then skim off and discard the grease.

4. Pour the remaining contents of the pot onto a filter.

5. Concentrate the filtered fluid by slow heating to the desired thickness. This is the glue; it can be stored in convenient containers.

6. Take the fish material remaining on the filter and cook it again to extract more glue, then repeat the filtering and concentrating.

Sources:

Encyclopedia of Chemical Technology, pp. 211-212.

Glue and Gelatine, by Paul I. Smith, Chemical Publishing Co., Inc., 1943, pp. 54-56.

Modern Wood Adhesives, by Thomas D. Perry, Pitman Publishing Co., 1944, pp. 91-92.

APPENDIX

Simple methods are given here for converting English and metric units of measurement. Following these is a series of useful conversion tables for units of area, volume, weight, pressure and power.

LENGTH CONVERSION

The chart in Figure 3 is useful for quick conversion from meters and centimeters to feet and inches, or vice versa. For more accurate results and for distances greater than 3 meters, use either the tables in Figure 2 or the equations.

The chart in Figure 3 has metric divisions of one centimeter to three meters, and English units in inches and feet to ten feet. It is accurate to about plus or minus one centimeter.

Example:

An example will explain how to use the tables. Suppose you wish to find how many inches are equal to 66cm. On the "Centimeters into Inches" table look down the leftmost column to 60cm and then right to the column headed 6cm. This gives the result, 25.984 inches.

FIGURE 1

Equations:

1 inch = 2.54cm
1 foot = 30.48cm
= 0.3048m
1 yard = 91.44cm
= 0.9144m
1 mile = 1.607km
= 5280 feet
1cm = 0.3937 inches
1m = 39.37 inches
= 3.28 feet
1km = 0.62137 miles
= 1000 meters

FIGURE 2

INCHES INTO CENTIMETERS
(1 in. = 2 539977 cm.)

inches	0	1	2	3	4	5	6	7	8	9
0	cm	2 54	5 08	7 62	10 16	12 70	15 24	17 78	20 32	22.86
10	25.40	27 94	30 48	33 02	35 56	38 10	40 64	43 18	45.72	48 26
20	50 80	53 34	55 88	58 42	60 96	63 50	66 04	68 58	71 12	73 66
30	76 20	78.74	81 28	83 82	86 36	88 90	91 44	93.98	96 52	99.06
40	101 60	104 14	106 68	109 22	111 76	114 30	116 84	119 38	121 92	124.46
50	127.00	129 54	132 08	134 62	137 16	139 70	142 24	144 78	147 32	149.86
60	152 40	154 94	157.48	160 02	162 56	165 10	167 64	170 18	172 72	175.26
70	177 80	180 34	182 88	185 42	187 96	190 50	193 04	195 58	198.12	200 66
80	203 20	205 74	208.28	210 82	213.36	215 90	218 44	220 98	223 52	226.06
90	228.60	231.14	233.68	236 22	238 76	241 30	243 84	246 38	248 92	251 46

CENTIMETERS INTO INCHES
(1 cm. = 0.3937 in.)

cm.	0	1	2	3	4	5	6	7	8	9
0	inches	0 394	0 787	1.181	1 575	1 969	2 362	2 756	3.150	3.543
10	3.937	4.331	4 724	5.118	5 512	5.906	6 299	6 693	7.087	7.480
20	7.874	8 268	8.661	9 055	9.449	9.843	10 236	10 630	11.024	11.417
30	11.811	12 205	12.598	12.992	13.386	13 780	14.173	14 567	14.961	15 354
40	15.748	16 142	16.535	16.929	17 323	17.717	18.110	18 504	18 898	19 291
50	19.685	20.079	20 472	20 866	21 260	21.654	22 047	22 441	22 835	23 228
60	23.622	24.016	24 409	24 803	25 197	25 591	25.984	26.378	26 772	27.165
70	27.559	27.953	28 346	28 740	29.134	29 528	29 921	30 315	30 709	31.102
80	31.496	31.890	32 283	32 677	33 071	33 465	33 858	34 252	34 646	35.039
90	35 433	35 827	36.220	36 614	37 008	37.402	37.795	38.189	38.583	38.976

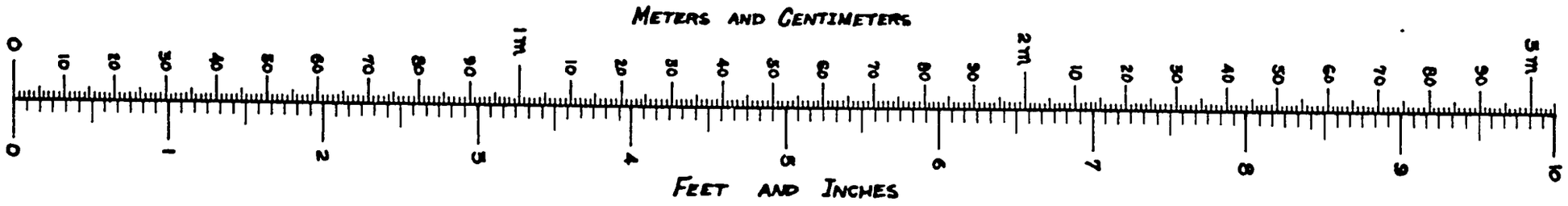
METERS AND CENTIMETERS
0
10
20
30
40
50
60
70
80
90
1 m
2 m
3 m
0
1
2
3
4
5
6
7
8
9
10
FEET AND INCHES

FIGURE 3

WEIGHT CONVERSION

The chart in Figure 5 converts pounds and ounces to kilograms and grams or vice versa. For weights greater than ten pounds, or more accurate results, use the tables (Figure 4) or conversion equations. See "Length Conversion," Figure 2, for an example of the use of the tables.

On the chart, notice that there are sixteen divisions for each pound to represent ounces. There are 100 divisions only in the first kilogram, and each division represents ten grams. The chart is accurate to about plus or minus twenty grams.

Equations:

1 ounce = 28.35 grams
1 pound = 0.4536 kilograms
1 gram = 0.03527 ounce
1 gram = 2.205 pounds

FIGURE 4

KILOGRAMS INTO POUNDS
(1 kg. = 2.20463 lb.)

kg.	0	1	2	3	4	5	6	7	8	9
0	lb	2.20	4 41	6 61	8 82	11 02	13 23	15.43	17 64	19 84
10	22 05	24.25	26 46	28 66	30 86	33 07	35 27	37 48	39 68	41 89
20	44 09	46 30	48 50	50 71	52 91	55 12	57 32	59 53	61 73	63 93
30	66 14	68 34	70 55	72 75	74 96	77 16	79 37	81 57	83 78	85 98
40	88 19	90 39	92 59	94 80	97 00	99 21	101 41	103 62	105 82	108 03
50	110 23	112 44	114 64	116 85	119 05	121 25	123 46	125 66	127 87	130 07
60	132 28	134 48	136 69	138 89	141 10	143 30	145 51	147 71	149 91	152 12
70	154 32	156 53	158 73	160 94	163 14	165 35	167 55	169 76	171 96	174 17
80	176 37	178 58	180 78	182 98	185 19	187 39	189 60	191.80	194 01	196 21
90	198 42	200 62	202 83	205 03	207 24	209 44	211 64	213 85	216 05	218 26

POUNDS INTO KILOGRAMS
(1 lb. = 0 45359 kg)

lb	0	1	2	3	4	5	6	7	8	9
0	kg.	0 454	0 907	1.361	1 814	2 268	2 722	3 175	3 629	4.082
10	4.536	4 990	5.443	5 897	6 350	6 804	7 257	7 711	8 165	8 618
20	9 072	9 525	9 979	10 433	10 886	11 340	11 793	12 247	12 701	13 154
30	13 608	14 061	14.515	14 969	15 422	15 876	16 329	16.783	17 237	17.690
40	18 144	18 597	19 051	19 504	19 958	20 412	20 865	21.319	21 772	22.226
50	22 680	23 133	23 587	24 040	24.494	24 948	25.401	25 855	26 308	26 762
60	27.216	27.669	28 123	28 576	29 030	29 484	29 937	30 391	30 844	31 298
70	31.751	32 205	32 659	33 112	33 566	34 019	34 473	34 927	35 380	35 834
80	36 287	36 741	37 195	37 648	38 102	38 555	39 009	39 463	39 916	40 370
90	40 823	41 277	41 730	42 184	42 638	43 091	43 545	43 998	44 452	44.906

FIGURE 5

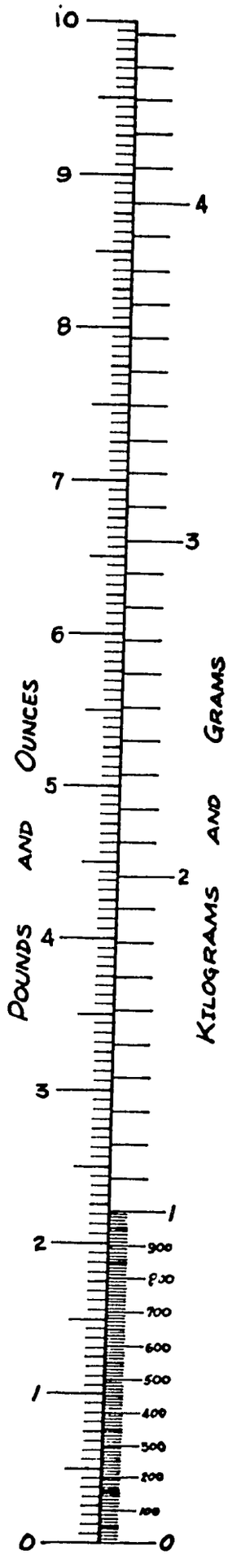

FIGURE 1

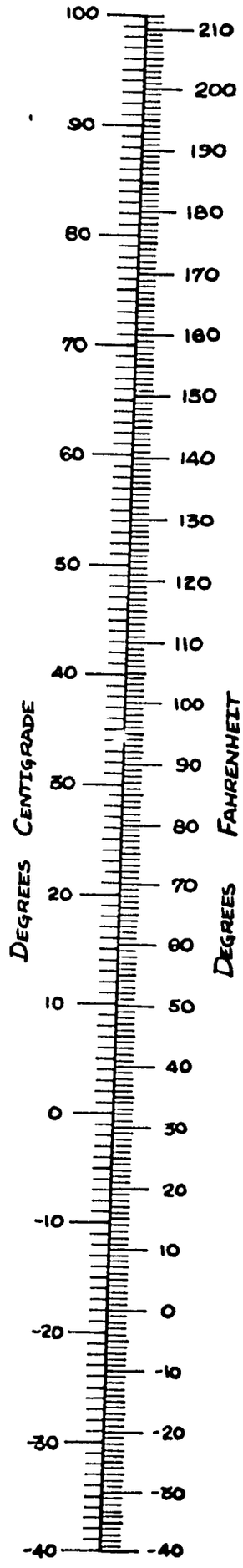

TEMPERATURE CONVERSION

The chart in Figure 1 is useful for quick conversion from degrees Celsius (Centigrade) to degrees Fahrenheit and vice versa. Although the chart is fast and handy, you must use the equations below if your answer must be accurate to within one degree.

Equations:

Degrees Celsius = 5/9 x (Degrees Fahrenheit -32)

Degrees Fahrenheit = 1.8 x (Degrees Celsius) +32

Example:

This example may help to clarify the use of the equations; 72F equals how many degrees Celsius?

72F = 5/9 (Degrees F -32)

72F = 5/9 (72 -32)

72F = 5/9 (40)

72F = 22.2C

Notice that the chart reads 22C, an error of about 0.2C.

Conversion Tables

Units of Area

1 Square Mile	= 640 Acres	= 2.5899 Square Kilometers
1 Square Kilometer	= 1,000,000 Square Meters	= 0.3861 Square Mile
1 Acre	= 43,560 Square Feet	
1 Square Foot	= 144 Square Inches	= 0.0929 Square Meter
1 Square Inch	= 6.452 Square Centimeters	
1 Square Meter	= 10.764 Square Feet	
1 Square Centimeter	= 0.155 Square Inch	

Units of Volume

1.0 Cubic Foot	= 1728 Cubic Inches	= 7.48 U.S. Gallons
1.0 British Imperial Gallon	= 1.2 U.S. Gallons	
1.0 Cubic Meter	= 35.314 Cubic Feet	= 264.2 U.S. Gallons
1.0 Liter	= 1000 Cubic Centimeters	= 0.2642 U.S. Gallons

Units of Weight

1.0 Metric Ton	= 1000 Kilograms	= 2204.6 Pounds
1.0 Kilogram	= 1000 Grams	= 2.2046 Pounds
1.0 Short Ton	= 2000 Pounds	

Conversion Tables

Units of Pressure

1.0 Pound per square inch	= 144 Pounds per square foot
1.0 Pound per square inch	= 27.7 Inches of Water*
1.0 Pound per square inch	= 2.31 Feet of Water*
1.0 Pound per square inch	= 2.042 Inches of Mercury*
1.0 Atmosphere	= 14.7 Pounds per square inch (PSI)
1.0 Atmosphere	= 33.95 Feet of Water
1.0 Foot of Water = 0.433 PSI	= 62.355 Pounds per square foot
1.0 Kilogram per square centimeter	= 14.223 Pounds per square inch
1.0 Pound per square inch	= 0.0703 Kilogram per square centimeter

* at 62 degrees Fahrenheit (16.6 degrees Celsius)

Units of Power

1.0 Horsepower (English)	= 746 Watts = 0.746 Kilowatt (KW)
1.0 Horsepower (English)	= 550 Foot Pounds per second
1.0 Horsepower (English)	= 33,000 Foot Pounds per minute
1.0 Kilowatt (KW) = 1000 Watts	= 1.34 Horsepower (HP) English
1.0 Horsepower (English)	= 1.0139 Metric Horsepower (cheval-vapeur)
1.0 Metric Horsepower	= 75 Meters X Kilogram/Second
1.0 Metric Horsepower	= 0.736 Kilowatt = 736 Watts