AGENCY FOR INTERNATIONAL DEVELOPMENT
WASHINGTON, D. C. 20523

BIBLIOGRAPHIC INPUT SHEET

FOR AID USE ONLY
Batch 70

1. SUBJECT CLASSIFICATION

A. PRIMARY
Science and technology

TC00-0000-0000

B. SECONDARY
Applications

2. TITLE AND SUBTITLE
Village technology handbook,sect.3: Agriculture

3. AUTHOR(S)
(101) Volunteers for Int.Technical Assistance, Mt.Rainier,Md.

4. DOCUMENT DATE
1970

5. NUMBER OF PAGES
85p.

6. ARC NUMBER
ARC

7. REFERENCE ORGANIZATION NAME AND ADDRESS
VITA

8. SUPPLEMENTARY NOTES *(Sponsoring Organization, Publishers, Availability)*

9. ABSTRACT

10. CONTROL NUMBER
PN-AAE-660

11. PRICE OF DOCUMENT

12. DESCRIPTORS
Agricultural machinery
Earth moving equipment
Intermediate technology
Irrigation
Small machines
Poultry equipment
Roads
Silage

13. PROJECT NUMBER

14. CONTRACT NUMBER
CSD-2795 GTS

15. TYPE OF DOCUMENT

AID 590-1 (4-74)

ISD-1715
VITA

Village Technology Handbook

SECTION 3: AGRICULTURE

FOREWORD

Progress is the result of man's mastery of the world he lives in. The VILLAGE TECHNOLOGY HANDBOOK is aimed at helping villagers to master the resources available to them: to improve their own lives and to bring their villages more fully into the lives of the nations of which they form a basic and important part.

Village development takes on special importance in the light of the fact that 80 percent of those who live in less-developed countries live in villages. If progress is to come to nations, progress must come to villages.

Technical information is a basic factor in progress, along with other basic factors: political, social and economic. The VILLAGE TECHNOLOGY HANDBOOK was conceived by VITA Volunteers in 1962 as a means of bridging the "technical information gap" which keeps the world's villages from learning from one another's experience. The book's aim is to gather in one publication information from many sources which has been found helpful in villages.

This handbook was first published by the U.S. Agency for International Development in two volumes in 1963 and 1964. In the 1970 edition, the two earlier volumes are integrated into one book, the editing has been made more uniform, some new information has been added and the illustrations have been improved. The entire handbook has been checked for accuracy by VITA Volunteer specialists. A new feature in this edition is the incorporation of information on other publications which cover in detail subjects which are discussed only briefly here. VITA plans to continue to improve the handbook in future editions to make it increasingly effective as a key to existing technology for village workers.

The information in the handbook has come from many sources. VITA hopes that criticism and new information will come from many of the same sources--and from other sources. The questionnaire on page ix was designed to stimulate this flow of criticism and information. VITA will test new information and then disseminate it to those who need it.

VITA is grateful to the U.S. Agency for International Development for its financial support of the revision and for its help in reviewing the contents. Thanks are also due to the Federal Extension Service, U.S. Department of Agriculture, for its help in reviewing the section on "Home Improvement".

A NOTE ON USING THE HANDBOOK

This handbook describes techniques and devices which can be made and used in villages. Hopefully the book will generate new ideas as well as pass on information which has already been tried.

Some of the practices suggested here can be adopted on an individual basis. Others, however, will require cooperation by many people and, perhaps, by government agencies. In many cases, it

would be well to seek out extension services existing in your area. If local government or university extension services are available, they will be able to give you information well suited to local conditions. In some cases, there may be a need for a credit union or a consumer, marketing, housing or service cooperative. Information on credit unions is available from:

CUNA International, Inc.
World Extension Department
Box 431
Madison, Wisconsin 53701
U.S.A.

Information on cooperatives is available from:

Agricultural Cooperative Development International
Suite 1200
1430 K St., N.W.
Washington, D.C. 20005
U.S.A.

When the materials suggested in the handbook are not available, it may be possible to substitute other materials; but be careful to make any changes in dimensions made necessary by such substitutions.

Dimensions are given in metric units in the text, with English units in parentheses. Only metric units are given in the illustrations. Conversion tables are given in the Appendix.

Reference materials, along with information on where they can be obtained, are listed at the end of a specific entry when they pertain to that entry. When they refer more generally to the field covered in a section of the book, they are given at the end of the section. If you cannot get these publications, VITA may be able to help you.

If you want to use translations of material in the handbook, we ask you to let VITA know. The material you want may already be translated; if it is not, and if you translate it, VITA would like to make your translation available to others.

If you have questions on the material presented here, if you run into problems in implementing the handbook's suggestions, or if you have other technical problems, do not hesitate to ask for the personal help of a VITA Volunteer specialist. Write to:

VITA
3706 Rhode Island Avenue
Mt. Rainier, Md. 20822
U.S.A.

VITA's Volunteer Translation Service can translate letters in languages other than English, but correspondence moves much more quickly when carried on entirely in English. To help VITA Volunteers find a useful solution to your problem as quickly as possible, you should:

1. Be quantitative--give measurements, sketches or, when possible, photos.

2. Explain what materials are available and what limitations there are on cost.

3. Describe the best solution, if any, found so far in the area.

4. Explain any pertinent social or cultural conditions.

5. Indicate a deadline for action, especially if immediate attention is needed.

6. Don't expect miracles on the first reply. Successful problem-solving often takes a number of letters back and forth.

WHAT IS VITA?

VITA (Volunteers in Technical Assistance) was established in 1959 as a private, non-profit organization responding to requests for assistance in economic and social development. VITA mobilizes and coordinates the work of over 7,000 volunteer professionals representing 96 countries, 2000 corporations, universities, and other institutions. The VITA talent bank represents know-how in commerce and industry, agriculture and education, engineering and public health, in addition to many other fields.

VITA provides the most appropriate knowledge to specific calls for assistance from individuals, organizations, small businesses and self-help development groups. In its brief history VITA has responded to over 25,000 requests. VITA meets people's needs through the mail, by telephone, and by on-site counselling. Requests have come from village councils, community development volunteers, farmers, small business owners, and from members of national and international public and private institutions. VITA's unique method matches people with need and people with knowledge to give. This partnership increases the opportunity for the success of the requester's project.

One of the most effective ways that VITA shares its information with many people in through its Publications Program. The VILLAGE TECHNOLOGY HANDBOOK has played an important role in helping to disseminate that information. Supplementing this book is VITA's Technology Manual series, how-to-do-it booklets, which cover a wide spectrum of subject matter. A publications list is available on request.

In its OVERSEAS LIAISON PROGRAM, VITA encourages the formation of similar technical assistance programs throughout the world. Cooperation with these and other organizations working in the developing countries will give VITA access to on-the-spot background information on the technological aspects of international development.

VITA is financed by contributions from private individuals, foundations and industry, and by government grants.

SYMBOLS AND ABBREVIATIONS USED IN THIS BOOK

@ . . . . at
" . . . . inch
' . . . . foot
C . . . . degrees Celsius (Centigrade)
cc . . . cubic centimeter
cm . . . centimeter
cm/sec . centimeters per second
d or dia. diameter
F . . . . degrees Fahrenheit
gm . . . gram
gpm . . . gallons per minute
HP . . . horsepower
kg . . . kilogram
km . . . kilometer
l . . . . liter
lpm . . . liters per minute
l/sec . . liters per second
m . . . . meter
ml . . . milliliters
mm . . . millimeters
m/m . . . meters per minute
m/sec . . meters per second
ppm . . . parts per million
R . . . . radius

QUESTIONNAIRE

NOTE TO THE READER: VITA's publications are compiled by VITA Volunteers because they want to help people in developing areas. With your field experience, you are in a unique position of being able to increase the usefulness of this work by sharing what you have learned with the people who will use the publications in the future. You are strongly urged to complete the following questionnaire (using additional sheets if necessary), cut it out and send it to:

VITA
3706 Rhode Island Avenue
Mt. Rainier, Md. 20822
U.S.A.

Date _____

Name _____ Agency _____

Address _____

_____

1. Which items from the VILLAGE TECHNOLOGY HANDBOOK have you put into practice?

2. Have results been good or otherwise?

3. Have you made improvements or modifications in any of the devices or techniques? If so, please describe them, including photographs or sketches if possible.

4. Have you devised any new equipment or techniques not described in the handbook which may be of use to others? If so, please describe them.

5. Did you find the handbook useful, too simple, too complex, incomplete?

6. Other comments and suggestions:

TABLE OF CONTENTS

Forward v
A Note on Using the Handbook v
What is VITA? vii
Symbols and Abbreviations Used in This Book viii
Questionnaire ix

SECTION 1: WATER RESOURCES 1

Part 1: Developing Water Sources 3
- Getting Ground Water from Wells and Springs
- Tubewells
- Dry Bucket Well Drilling
- Driving Wells
- Dug Wells

Part 2: Water Lifting and Transport 63
- Water Transport
- Water Lifting
- Pumps

Part 3: Water Storage and Water Power 107
- Spring Development
- Cisterns
- Selecting a Damsite
- Reciprocating Wire Power Transmission

Part 4: Water Purification 123
- Boiler for Drinking Water
- Chlorination for Polluted Water and Super-Chlorination of Wells, Spring Encasements and Cisterns
- Water Purification Plant
- Sand Filter

SECTION 2: HEALTH AND SANITATION 145

Part 1: Sanitary Latrines
Part 2: Bilharziasis

SECTION 3: AGRICULTURE 183

Part 1: Earth Moving Devices for Irrigation and Road-Building
Part 2: Irrigation
Part 3: Poultry Raising
Part 4: Silage for Dairy Cows

SECTION 4: FOOD PROCESSING AND PRESERVATION 255

Part 1: Storing Food at Home
Part 2: Storing Vegetables and Fruits for Winter Use
Part 3: How to Salt Fish

SECTION 5: CONSTRUCTION 283

Part 1: Concrete Construction
Part 2: Bamboo Construction
Part 3: Glues

SECTION 6: HOME IMPROVEMENT 319

Solar Water Heater
Washing Machines
Cookers and Stoves
Home Soap Making
Bedding

SECTION 7: CRAFTS AND VILLAGE INDUSTRY 353

SECTION 8: COMMUNICATIONS 365

Part 1: Bamboo or Reed Writing Pens
Part 2: Silk Screening
Part 3: Inexpensive Rubber Cement

APPENDIX

Temperature Conversion 377
Length Conversion
Weight Conversion
Conversion Tables

Earth Moving Devices for Irrigation and Road-Building

Moving soil for irrigation and road-building is important to good farming. Careful preparation of land for irrigation and good water usage saves water, labor and soil; it also increases crop production. Farmers often try to irrigate rough land without enough field ditches or with no means of controlling water. Improved roads make communication easier between farmers, their suppliers and their markets.

Although modern heavy equipment is often sought for such work, it is not necessary. Land can be prepared effectively with small equipment which can be made by farmers of small manufacturers and can be pulled by animals or farm tractors. Descriptions of yokes and harnesses are given in Farm Implements for Arid and Tropical Regions, by H. J. Hoppen, Food and Agriculture Organization of the United Nations, Rome, 1960.

The following seven articles describe such small equipment:

1. Drag Grader
2. Fresno scraper*
3. Barrel fresno scraper
4. Float with adjustable blade
5. Buck scraper*
6. V-Drag*
7. Multiple Hitches

*The fresno scraper, buck scraper and V-drag are designed for use with large horses.

DRAG GRADER

This simple metal-edged wooden grader is designed for two medium-sized work horses or oxen. The grader can be scaled down for use with one horse or with smaller animals.

Road-building does not require giant tractors and earth movers. The grader described here was used for dirt and gravel roads in the midwestern United States about 1925. Similar graders were used in the original construction of U.S. Highway No. 1 from Maine to Florida.

Tools and Materials

Lumber: 7.5cm x 30.5cm (3" x 12")

2 pieces: 243cm (8') long
1 piece: 152cm (5') long
2 pieces: 30.5cm (1') long

Lumber: 7.5cm x 15cm (3" x 6")

1 piece: 37cm (4 1/2") long

4 Metal edges: 6mm to 12.5mm (1/4" to 1/2") thick, 10cm (4") wide, 243cm (8') long

17 Lag screws: 16mm (5/8") in diameter, 18cm (7") long

2 Eye bolts, 7.5cm (3") diameter, and large lock washers

Heavy chain: 3.7m (12')

32 Flathead steel woodscrews, 7.5cm (3") long. (Carriage bolts with lock washers would strengthen the grader.)

Hitch ring

Construction details for the grader are shown in Figure 1. The metal edge overhangs the surfaces of the 243cm (8') beam by 2.5cm (1"). Each edge is attached with eight large woodscrews or carriage bolts. Lockwashers should be used throughout to keep strains and tensions from loosening the nuts. The metal edges are attached to both top and bottom so the grader can be turned over to reverse the direction in which the soil is cast.

If the grader is to be used for cleaning ditches, the angle between the 152cm (5') and 243cm (8') beams should be 30 degrees.

The drawing position of the grader is adjusted by changing the hitching point on the chain. The hitch link should be such that when the small end is put over a link it will not slide. Reverse the hitch ring to slide it along the chain.

If welding equipment is available, the same design can be used for making steel road graders, and the cutting edges can be hard-surfaced to make them last longer.

Source:

Richard Hunger, John McCarthy and John Rediger, VITA Volunteers, Peoria, Illinois. Vernon E. Moore, VITA Volunteer, Washington, D.C.

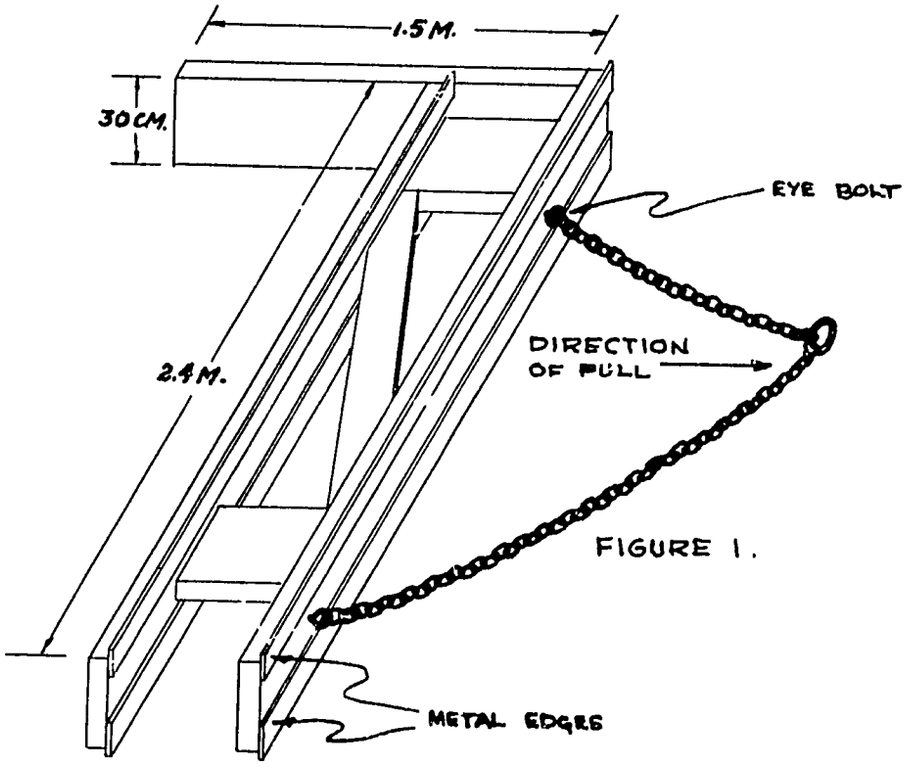

FIGURE 1.

FRESNO SCRAPER

This scraper is used for moving larger amounts of earth from higher spots to low areas. It can be made at low cost by farmers or small manufacturers, if materials and a well-equipped blacksmith shop are available. The scraper can do the work of larger, more expensive equipment.

Implements which slide soil on soil are inefficient. They require a large amount of power to move a small amount of soil. The fresno scraper can move soil more easily because it slides on its metal bottom.

The fresno scraper is used for moving large amounts of soil from high spots to low areas to prepare land for irrigation. It is a large metal scoop that can be built in a number of sizes, depending on the number of animals that can be used to pull it. Good results will be obtained by using the size described here with 2 oxen or 2 to 4 horses. Construction details are given in Figures 2 to 5.

Using the Fresno

Plow the high spots that you want to remove, as this will make it easier to load the fresno and save a great deal of power.

The fresno is made so that the power used to pull it will also help in loading and unloading. The rope in the handle is used for pulling the scoop into position for loading and to spread the soil evenly when unloading.

Always be careful when operating the fresno. Do not have any part of your body directly above the handle. Always keep a firm grip on the handle, while loading or getting ready to unload. A sudden jerk or unseen rough spot may cause the handle bar to fly up and strike you.

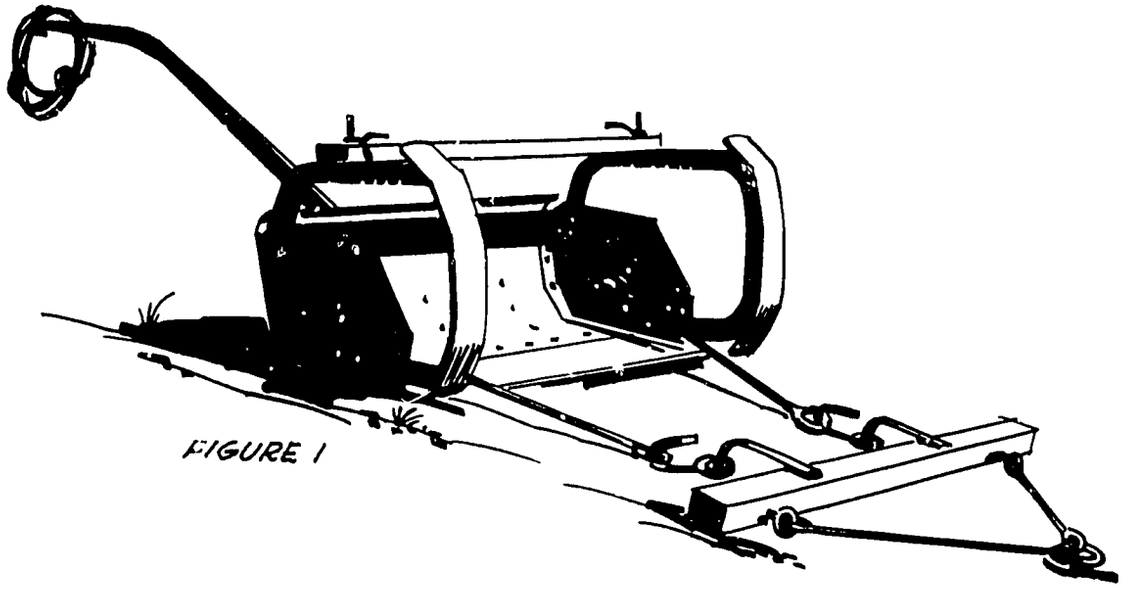

FIGURE 1

Tools and Materials

2 steel plates for sides:
6mm x 40cm x 60cm
(1/4" x 15 3/4" x 23 5/8")

1 steel plate for blade:
6mm x 35cm x 1.24 meters
(1/4" x 13 3/4" x 48 7/8")

1 steel plate for backplate:
6mm x 52cm x 1.24 meters
(1/4" x 20 1/2" x 48 7/8")

4 steel plates for stiffener plates:
6mm x 10cm x 18cm
(1/4" x 4" x 7 1/8")

1 steel plate for stiffener plate:
6mm x 10cm x 28cm
(1/4" x 4" x 11")

75 flathead rivets:
15mm x 3cm (19/32" x 1 1/8")

12 flathead rivets:
20mm x 3cm (25/32" x 1 1/8")

2 angle irons for runner:
6mm x 45mm x 45mm x 1.57 meters
(1/4" x 1 3/4" x 1 3/4" x 62 13/16")

2 steel plates for shoes:
6mm x 12.5cm x 66cm
(1/4" x 5" x 26")

2 strap irons for bar brace:
10mm x 4cm x 32cm
(3/8" x 1 9/16" x 12 5/8")

1 iron bar for handlebar:
15mm x 5cm x 1.6 meters
(9/16" x 2" x 63")

1 rope:
13mm x 2 meters
(1/2" x 78 3/4")

2 side plates, draft clamp stock:
20mm x 21cm
(25/32" x 8 1/4")

2 machine bolts with nut and washer:
13mm x 4cm (1/2" x 1 9/16")

2 draft bar rod stock:
20mm x 1.2 meters
(25/32" x 47 1/4")

2 draft bar rod stock:
20mm x 95cm
(25/32" x 37 3/8")

2 draft bar loop stock:
20mm x 45cm
(25/32" x 17 3/4")

2 draft bar loop stock:
20mm x 38cm
(25/32" x 15")

2 eye bolts with nuts and washers:
20mm x 25cm
(25/32" x 9 7/8")

2 strap iron clevis stock:
10mm x 4cm x 60cm
(3/8" x 1 9/16" x 23 5/8")

2 machine bolts with nuts and washers:
13mm x 10cm
(1/2" x 4")

1 oak draft bar:
6cm x 15cm x 1.52m
(2 3/8" x 6" x 59 7/8")

4 machine bolts with nuts and washers:
13mm x 6cm
(1/2" x 2 3/8")

8 machine bolts with nuts and washers:
13mm x 4cm
(1/2" x 1 9/16")

1 oak stop bar:
4cm x 8cm x 1.45 meters
(1 9/16" x 3 1/8" x 57 1/8")

2 stop bar stock:
threaded one end

2 stop bar ball nuts and washer:
13mm (1/2")

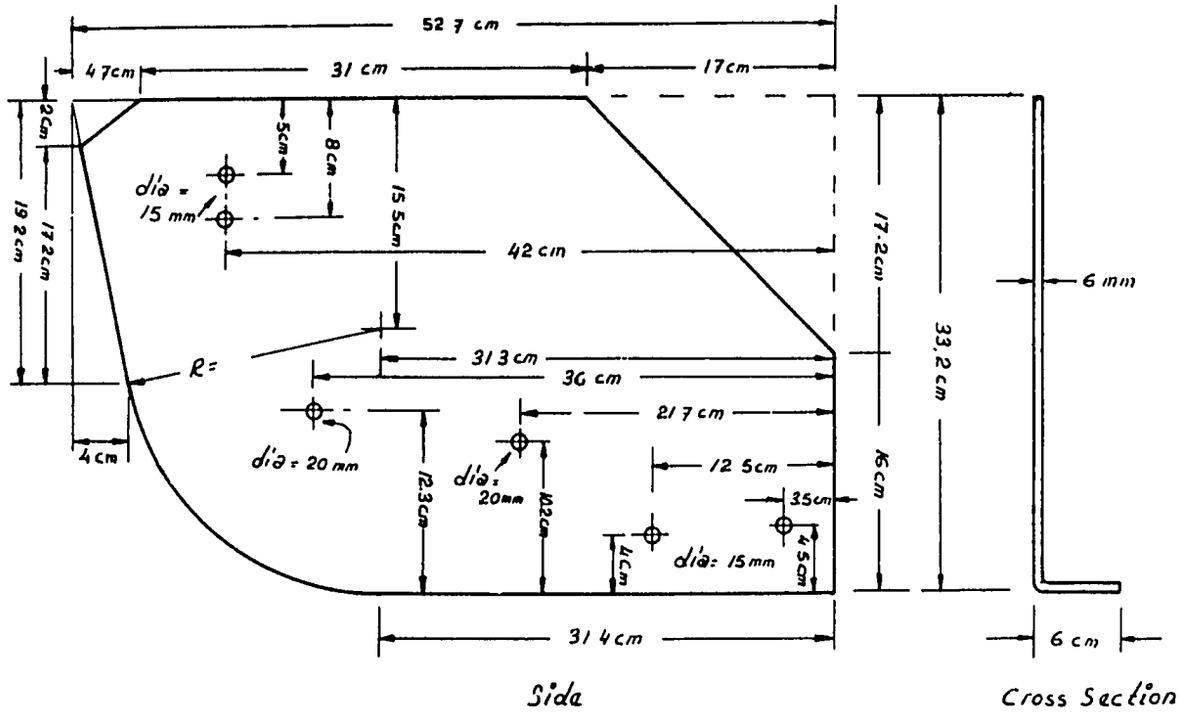

Figure 2 End Plate

FRESNO

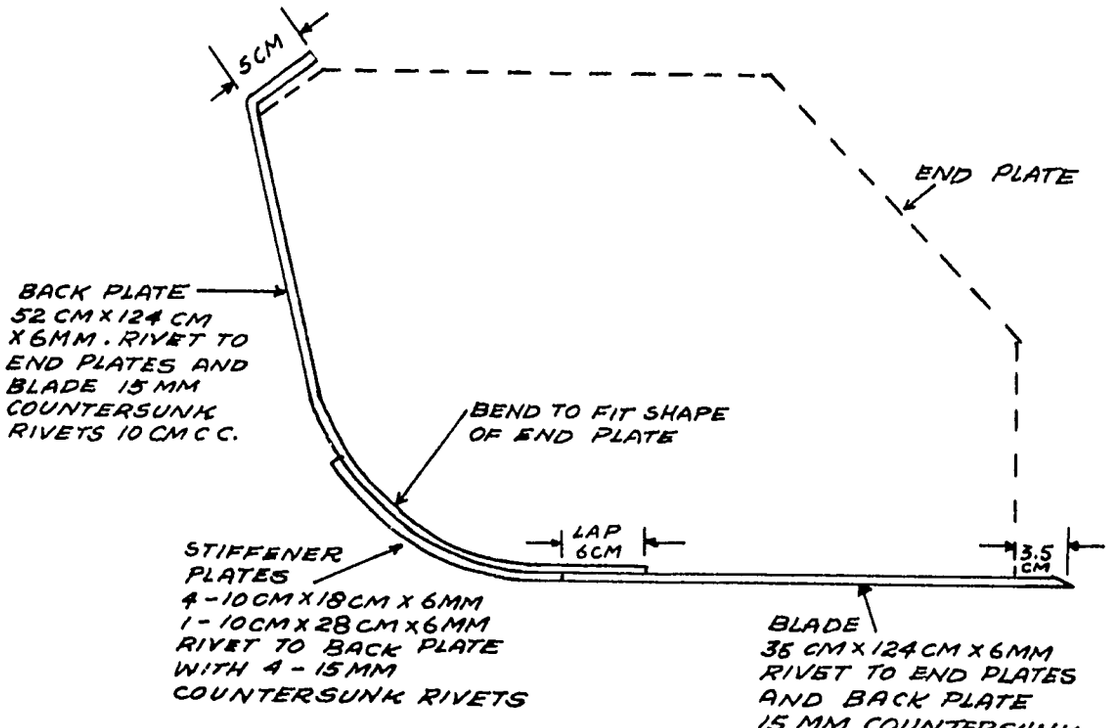

FIGURE 3 - ARRANGEMENT OF BLADE, BACK AND STIFFENER PLATES, END VIEW.

Shoes

12.5 cm x 6 mm x 66 cm Plate

Rivet to Runners, 6 -20 mm Countersunk rivets

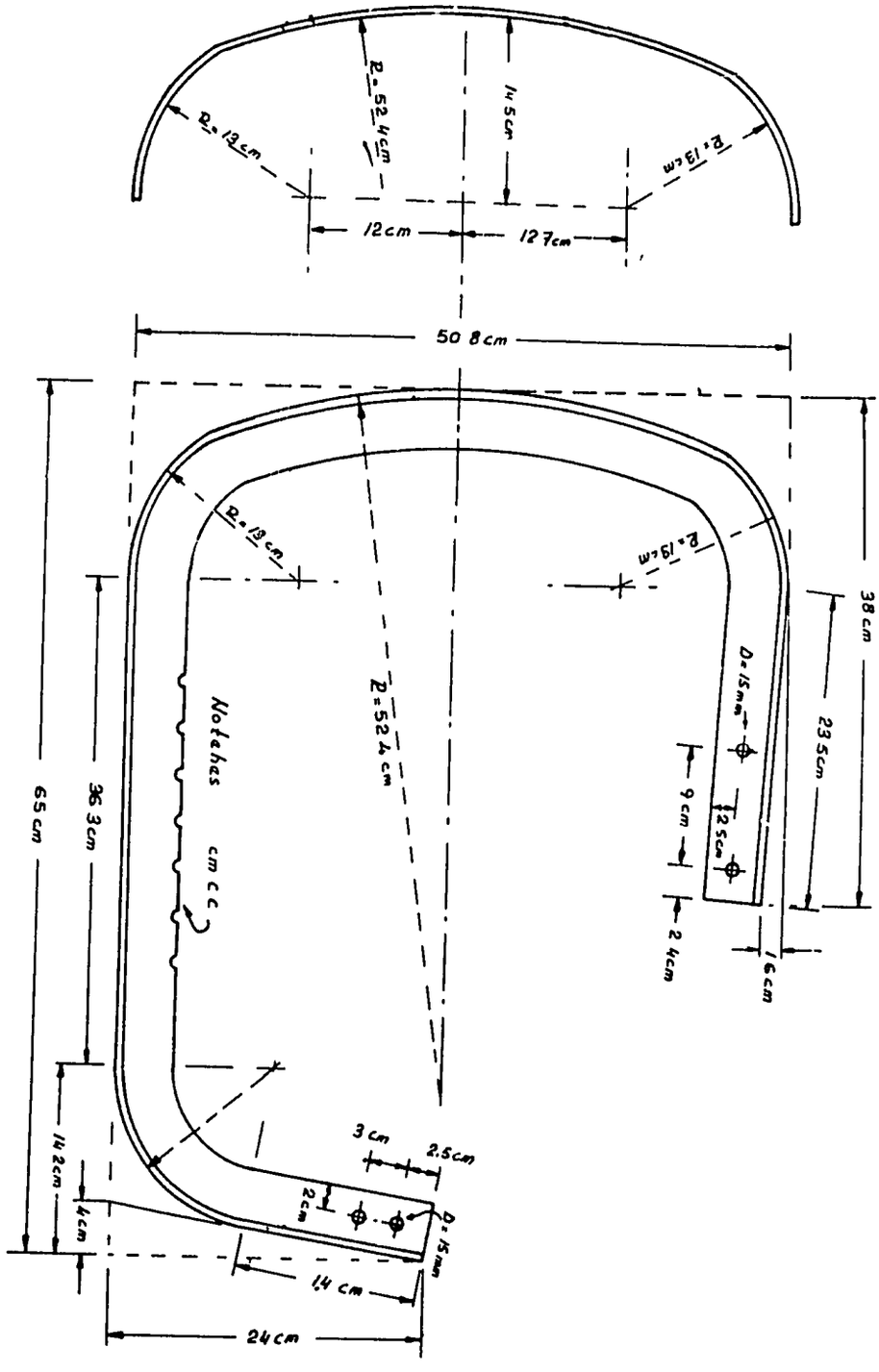

FIGURE 4 FRESNO RUNNER AND SHOES

Runner

4.5 cm x 4.5 cm x 6 mm Angle

157 cm long (overall)

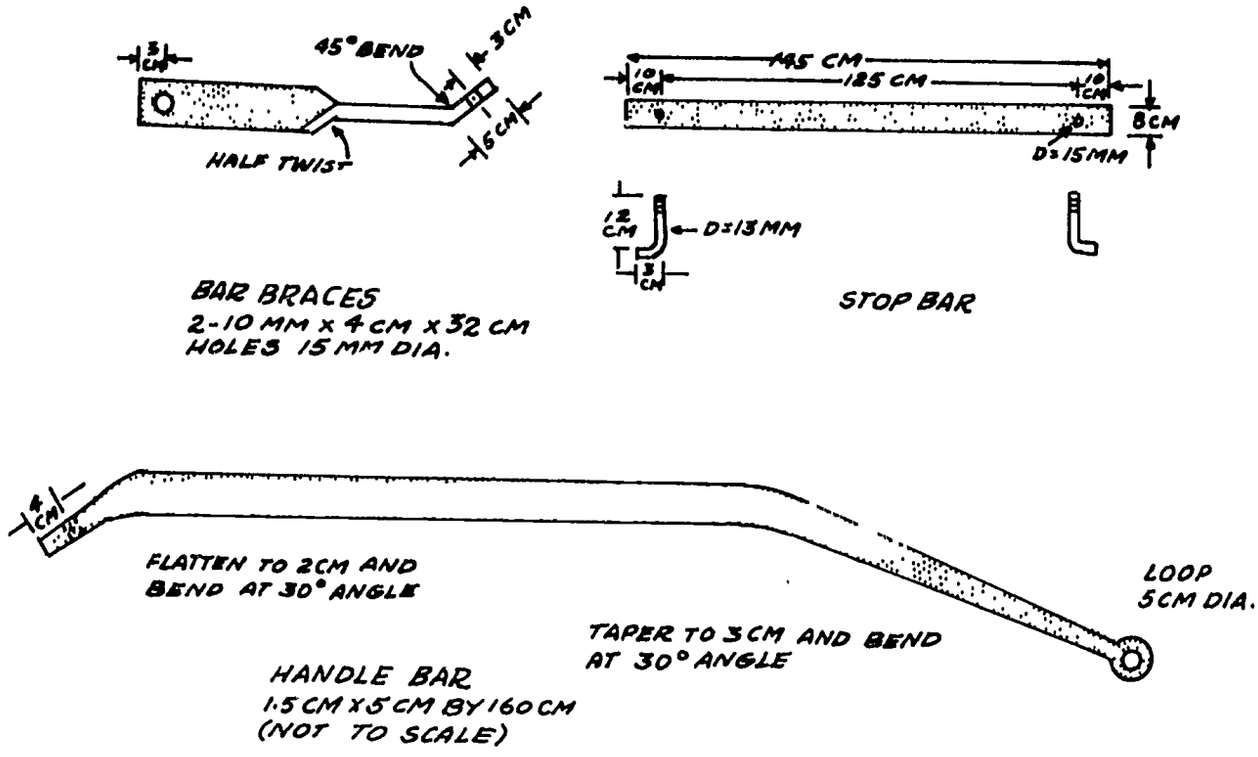

FIGURE 5 FRESNO BAR BRACES, STOP BAR AND HANDLE BAR.

To load the fresno, simply lift the handle until the front of the bit goes into the ground at a depth the animals can pull. Do not try to make too deep a cut or the fresno will be pulled over or the animals pulled to a stop. You will soon learn how to hold the handle for the proper cut and smooth loading.

When the fresno is full, push down on the handle and it will go forward without touching the ground until you are ready to unload it. Lift the handle when you are ready to unload and the pull of the animals will turn it into the dumping or spreading position. The stop bar across the top of the fresno can be moved to change the depth of the spreading of soil. Move it forward for a shallow depth or back for a deeper spread.

After it has been emptied and returned to the point of loading give the rope a hard pull and the fresno will fall back into position for loading.

Usual hitches for animals pulling the fresno are...

- two horses
- two oxen
- three horses

Two lines are used. Each outside horse is tied back to the hame or collar of the center horse. The center horse is then guided by the inside strap from the lines.

Source:

Construction and Use of Small Equipment for Farm Irrigation, by Carl M. Forsberg, James D. Metzger and John C. Steele, USOM/Turkey in cooperation with the Turkish Ministry of Agriculture.

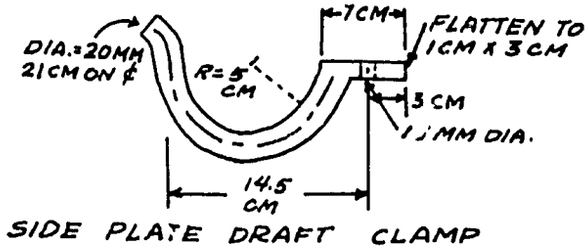

SIDE PLATE DRAFT CLAMP

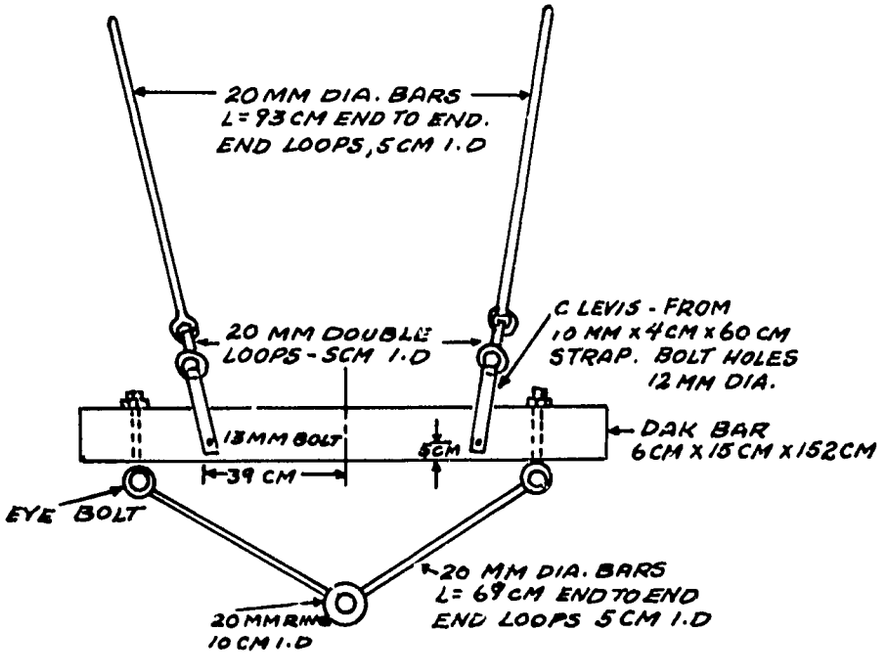

DRAFT BAR ASSEMBLY
FIGURE 6

BARREL FRESNO SCRAPER

The barrel fresno scraper is a lighter, simpler version of the fresno scraper described in the preceding entry. It is a low-cost implement to move soil efficiently (see Figure 1). It can be pulled by a team of bullocks and is operated by one man. The scraper, which is well-adapted to production by a village blacksmith, is made from an old barrel and scrap metal. The scraper can be adapted for heavy duty use.

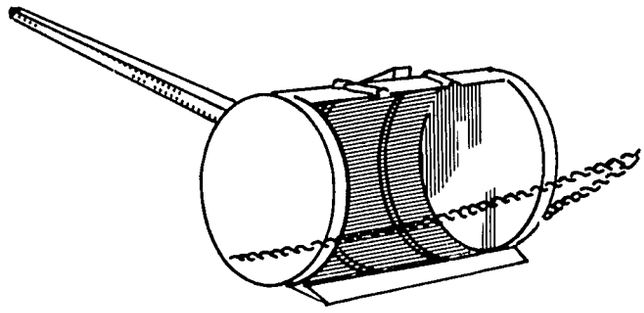

FIGURE 1 BARREL FRESNO SCRAPER

A barrel fresno scraper was built and tested in Afghanistan in 1964. It was found that it could move approximately twice as much soil as the shovel board normally used by the Afghan farmer. The scraper worked better when the high spots were plowed with a moldboard plow which breaks up the soil,

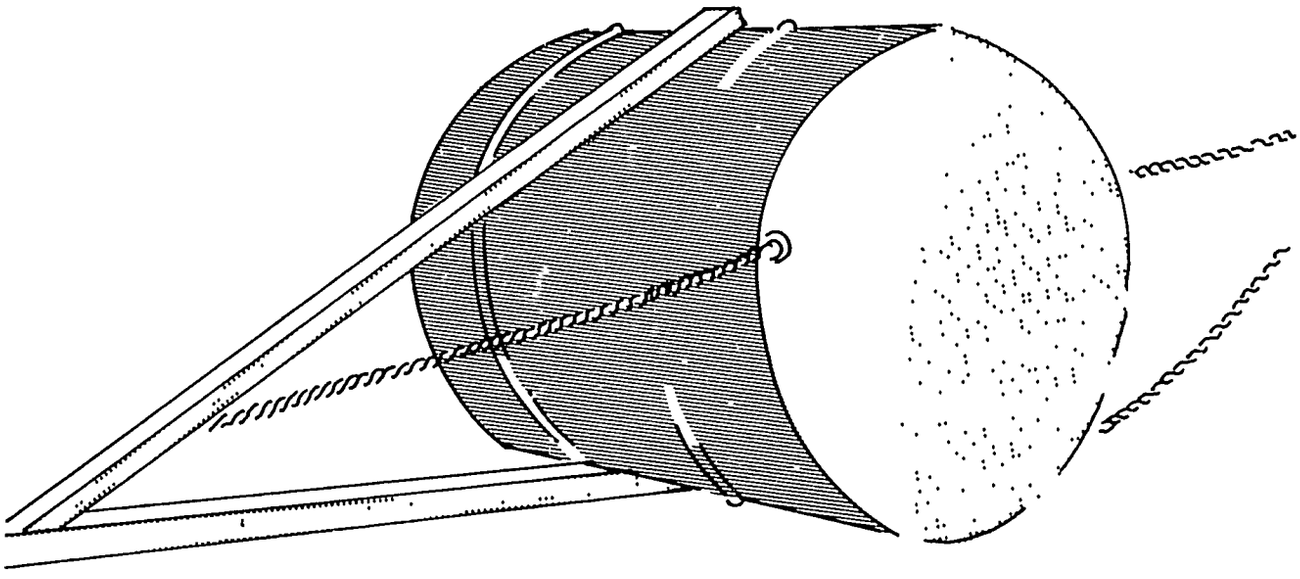

FIGURE 2.

making it easier to pick up. Using the local wooden plow was satisfactory but it left the soil cloddy.

The scraper was not tested over an extended period to determine how long it would last. It is estimated that it could be used for 8 to 10 years under normal use on the average Afghan farm. Under other conditions, particularly where the soil is sandy or where the scraper is used for road or terrace construction, its life would be much shorter.

Tools

Heavy hammer
Chisel - for cutting barrel
Punch - for making holes in barrel
Saw - for cutting wood
Drill - for boring holes in wood
Pliers
Welder or access to the services of a welder

Materials

Barrel, 208-liter (55-U.S. gallon) as new and strong as possible. Rust weakens the metal and a rusty barrel should not be used.

Blade, metal, 1 piece, 5 to 8mm (3/16" to 5/16") thick, 88cm (34 5/8") long. Have a blacksmith taper the blade until it has this shape ____ when viewed from the end. The blade should be sharp. Old truck springs make good blades.

Blade holder, metal, 2 pieces, 5 to 8mm (3/16" to 5/16") thick

Handle, wood, 1 piece, if soft wood 4 by 8cm (1 9/16" x 3 1/8") or pole 8cm (3 1/8") in diameter at large end, 3m (9'10")

Handle brace, wood, 1 piece, 3cm by 8cm by 150cm (1 3/16" x 3 1/8" x 59")

Block wood, 1 piece, 3cm by 8cm by 12cm (1 3/16" x 3 1/8" x 4 3/4")

Bolt, 1 piece, 1cm diameter by 10cm (3/8" x 4")

Nails, 5 pieces, 9cm (3 1/2") long

Wire, heavy - at least 3mm (1/8") thick, 12m (39') long

Chain, 4m (13'), made from 7mm (9/32") rod, with hook at each end. See Figure 1.

Rope, 12mm (1/2") diameter, 3m (9'10") long

Construction

1. Cut the barrel, starting next to the welded seam, as shown in Figure 3 below. Also see Figure 1. The cut is exactly half way around the barrel.

2. Pull the cut-out section forward and flatten it with a hammer. See Figure 4.

3. Fold the cut-out section back 17 to 20 cm (6 3/4" to 7 7/8") from the end of the cut, depending on the width of the blade, to form a double bottom. See Figure 5.

4. The blade can be installed by welding or by riveting.

A. To install the blade by welding (see Figure 1):

(1) Butt the blade (see materials) against the barrel fold and spot weld it. Five spots of welding 3cm (1 3/16") long, evenly spaced, are enough.

(2) The lower tip of the blade holder (see materials) should be even with the end of the cut.

(3) Weld the blade holder at the outside of the barrel to the heavy rim.

(4) Weld the blade to the bottom of the blade holder.

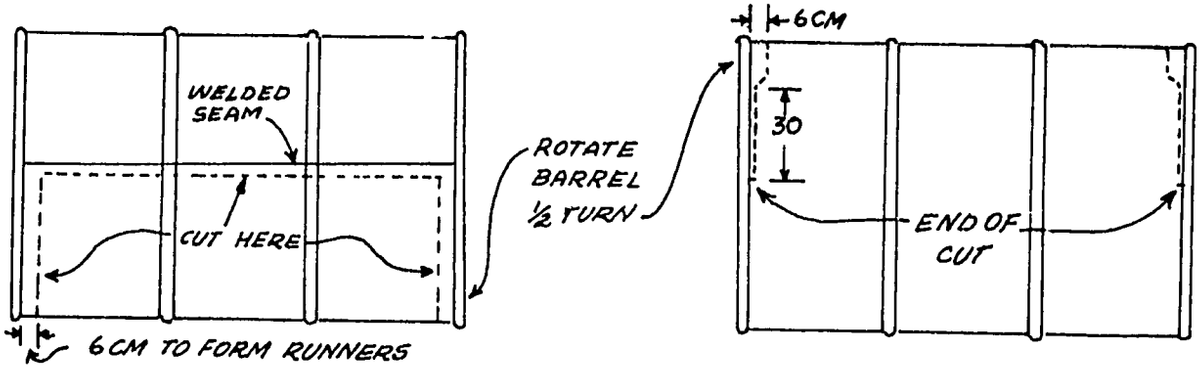

FIGURE 3 CUTTING THE BARREL

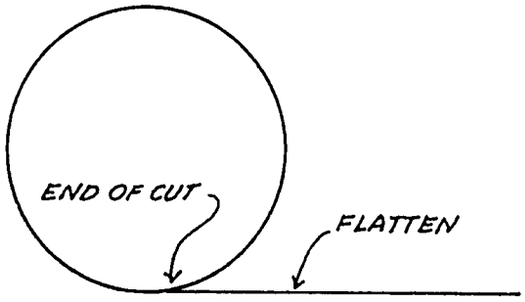

FIGURE 4 FLATTENING THE CUT-OUT SECTION

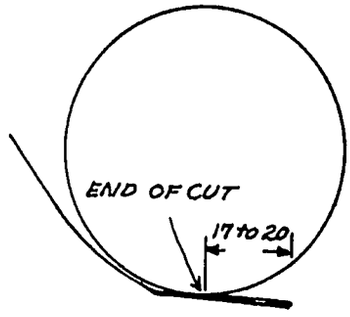

FIGURE 5 FORMING A DOUBLE BOTTOM

B. To install the blade by riveting:

(1) No blade holder is required.

(2) The metal for the blade should be 5 to 8mm (3/16" to 5/16") thick, 8 to 12cm (3 1/8" to 4 3/4") wide and 164 cm (64 1/2") long. Taper and sharpen the blade before bending.

(3) Bend the blade up at right angles 40cm (15 3/4") from each end. This will leave the main part of the blade 86cm (33 7/8") long to fit inside the barrel.

(4) Insert the blade.

(5) Drill holes and rivet as shown in Figure 6.

(6) The folded part of the barrel bottom should extend 3cm (1 3/16") under the blade and be riveted to the bottom of the blade.

5. Install the handle and handle brace. See Figure 7.

(1) Position the barrel so the edge of the blade is exactly 4cm above the floor.

(2) Taper the end of the handle and place it in the position shown in the sketch, making sure it is in the center of the barrel.

(3) Punch a hole through the bottom of the barrel, drill a hole through the end of the handle and bolt the handle to the barrel.

(4) Bend 2 1/2 cm of the edge of the

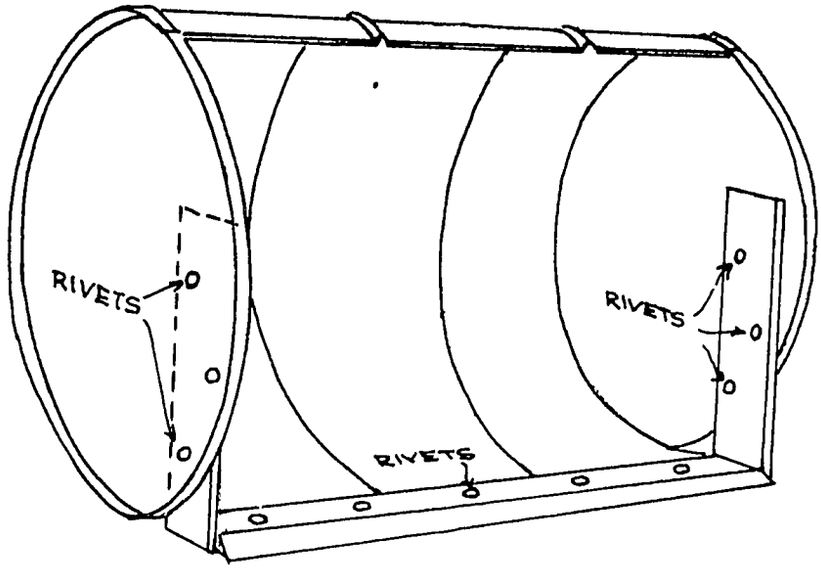

FIGURE 6 ATTACHING THE BLADE WITHOUT WELDING

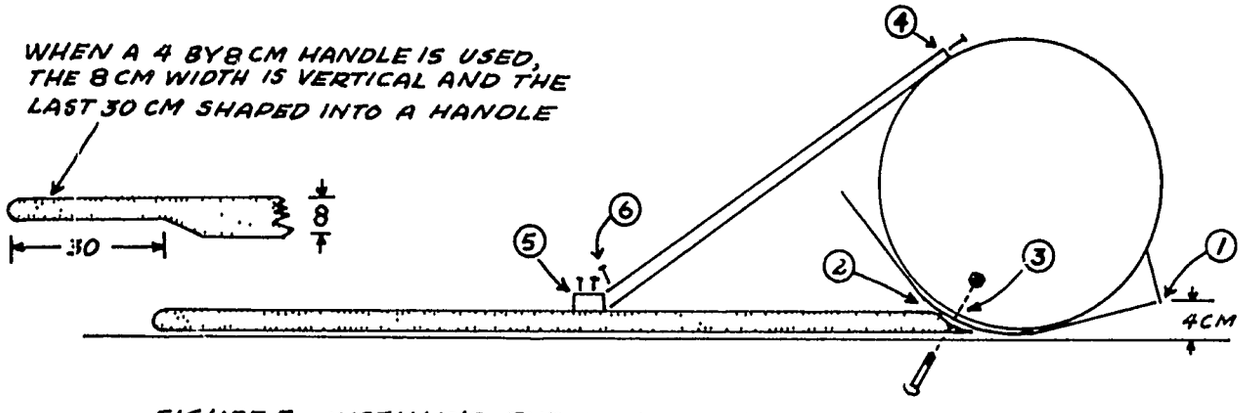

FIGURE 7 INSTALLING THE HANDLE AND HANDLE BRACE

barrel metal up as shown in Figure 1. Punch 2 small holes in the metal and drive 2 nails through the holes into the end of the wooden brace.

(5) Making sure the blade is still 4 cm from the floor, nail the wooden block against the end of the wooden brace.

(6) Drive a nail through the end of the brace into the handle.

6. Install the brace wires and rope. See Figure 8.

(1) Punch holes through the side and end of the barrel halfway between the bolt and brace end.

(2) Fix 4 strands of wire through the holes and around the brace and handle.

(3) Twist the wires with a small stick

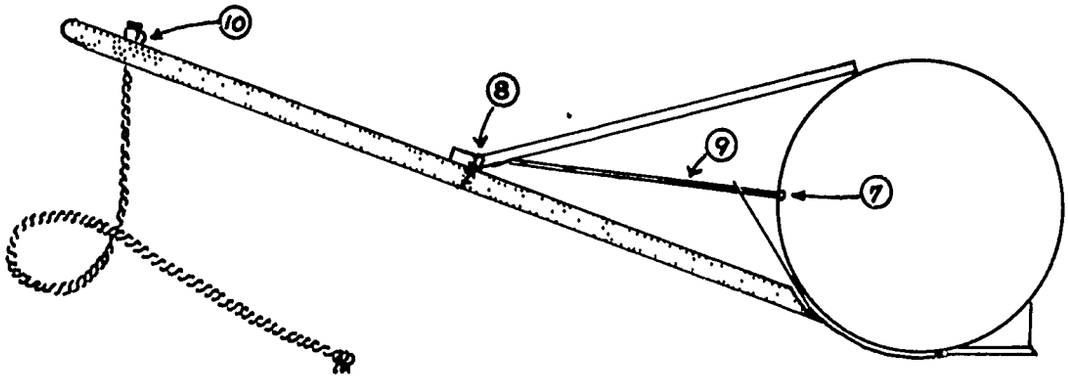

FIGURE 8 INSTALLING BRACE WIRES AND ROPE

to tighten the wire braces, making sure the handle is at right angles to the barrel.

(4) Drill a 1 1/2cm hole, 20cm from the end of the handle. Thread the end of the rope through the hole and make a knot at each end.

7. Make holes for installing chain. See Figure 9.

8. Install chain. See Figures 1 and 2.

Operation

Always be careful, when operating the barrel fresno scraper, not to have any part of your body directly above the handle.

Keep a firm grip on the handle while loading or getting ready to unload. An unseen rough spot may cause a sudden jerk which will make the handle fly up and strike you.

Before using the scraper, plow the high spots that you want to remove. This will make it easier to load the soil.

The power used to pull the scraper will also help in loading and unloading. Use the rope in the handle to pull the scraper into position for loading and for spreading the soil evenly when unloading.

To load the scraper, simply lift the handle to let the blade go into the soil. Do not make too deep a cut: this would either pull the scraper over or pull the animals to a stop.

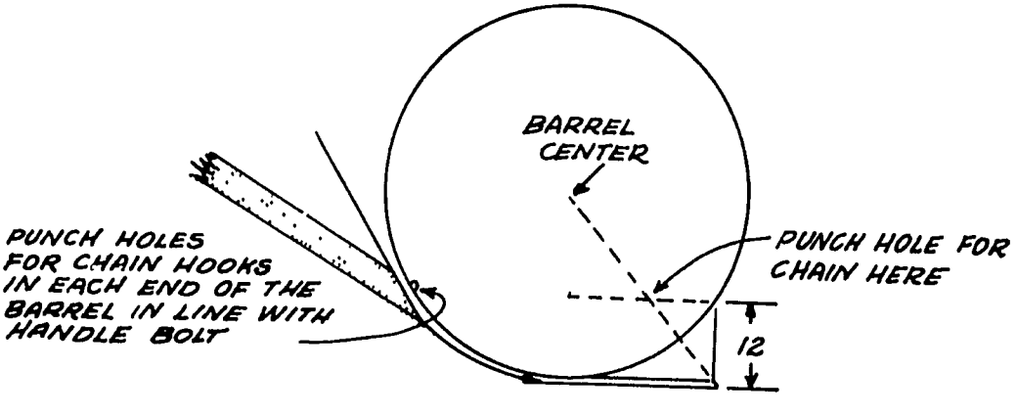

FIGURE 9 PREPARING TO INSTALL CHAIN

You will learn by experience how to hold the handle for a proper cut and smooth handling.

When the scraper is full, push down on the handle to let the loaded scraper slide forward without picking up more soil to where you want to unload it.

To unload, lift the handle. The pull of the animals will move the scraper into dumping position. To spread the soil evenly, hold the rope tight. To dump the soil in a pile, let the rope go.

Repairing the Barrel Fresno Scraper

To repair the scraper when the bottom starts to wear through, cut off the unworn part of the cut-out section of the barrel and weld or rivet it over the old bottom. When the rims of the barrel, which serve as runners, start to show wear, weld or rivet old truck springs or similar heavy strap iron over their entire length.

Adapting for Heavy Duty

To adapt the barrel fresno scraper for heavy duty, the two wearing points, the bottom and the runners must be reinforced.

To reinforce the scraper bottom, cover it with a heavy iron plate 4 to 6mm (5/32" to 1/4") thick from the rear of the blade to the bolt which holds the handle. Weld or rivet the plate in place.

To reinforce the runners, weld or rivet old truck springs or other heavy strap iron as described in the paragraph on repairing the scraper.

Source:

Dale Fritz, VITA Volunteer, Washington, D.C.

FLOAT WITH ADJUSTABLE BLADE

The float is very useful for leveling a field before planting a crop. It can be made by a small manufacturer or a carpenter-blacksmith with locally-available materials (see Figure 1).

All earth moving operations, where any quantity of soil is moved, leave the land surface in an uneven condition. The float is the best piece of equipment for obtaining a smooth, even surface.

It is difficult to do a perfect job of leveling the first season after earth has been moved. The areas from which the soil has been removed are usually hard and the areas to which it has been moved are soft so that uneven settling results. Also, general tillage and plowing operations sometimes roughen the land surface. Using the float over the entire field each season before planting the crop will help answer these problems. Best results may be obtained by floating the field in both directions (at 90 degrees), going back and forth. The last floating should be in the direction of the irrigation flow.

When borders are built in a field for border irrigation it is usually best to use the float over the entire areas between the borders before seeding.

The float can be built in various widths according to the available power. It is necessary, however, that the float be at least 5 meters (16 feet) long to insure a good job of leveling the earth. The adjustable blade is optional but it is often desirable if a buck scraper is not available.

Common hitches for the float are the same as used with the fresno.

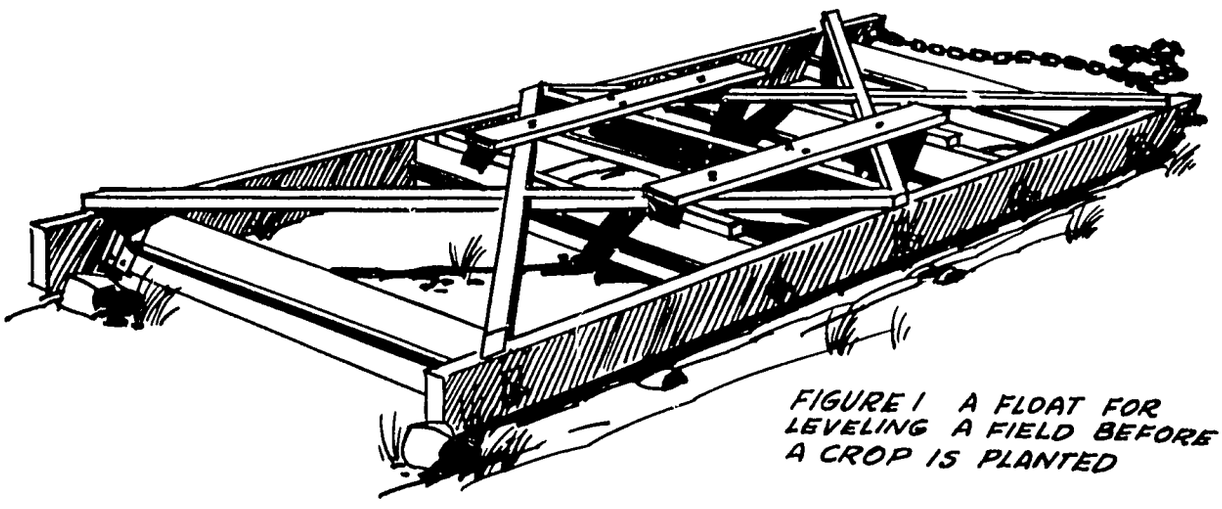

FIGURE 1 A FLOAT FOR LEVELING A FIELD BEFORE A CROP IS PLANTED

Tools and Materials

Wood:

2 runners, 5cm x 30cm x 5.5 meters (2" x 12" x 18')

3 blades, 5cm x 30cm x 1.8 meters (2" x 12" x 70 7/8")

2 cross braces, 5cm x 20cm x 1.9 meters (2" x 7 7/8" x 74 13/16")

2 diagonal braces, 5cm x 15cm x 3.75 meters (2" x 5 7/8" x 12'4")

2 diagonal braces, 5cm x 15cm x 3 meters (2" x 5 7/8" x 9'9")

4 side blocks, 5cm x 30cm x 45cm (2" x 12" x 17 3/4")

1 lever, 5cm x 10cm x 1.5 meters (2" x 4" x 59")

2 strap iron runner plates, 7mm x 50mm x 6 meters (9/32" x 2" x 19'7")

3 angle iron cutting edges, 7mm x 50mm x 1.8 meters (9/32" x 2" x 70 7/8")

2 steel tie rods (threaded both ends), 7mm x 2 meters (9/32" x 78 3/4")

4 nuts, 7mm (9/32")

8 washers, 7mm (9/32")

1 pipe axle, 5cm (2") diameter x 2 meters (78 3/4")

2 steel plates, 10mm x 20cm x 20cm (3/8" x 7 7/8" x 7 7/8")

3 u-bolts, with nuts and washers, 13mm x 20cm (1/2" x 7 7/8")

2 hitch stocks, 7mm x 50mm x 70cm (9/32" x 2" x 27 9/16")

50 flat head screws, 4cm (1 9/16") (No. 14)

15 flat head stove bolts, with nuts and washers, 6mm x 8cm (1/4" x 3 5/32")

4 carriage bolts, with nuts and washers, 13mm x 13cm (1/2" x 5 1/8")

1.5kg nails, 13cm (40d) (5 1/8")

1.5kg nails, 10cm (20d) (4")

1 rope, 10mm x 4 meters (3/8" x 13')

1 chain or cable hitch, 5 meters (16' 5")

Construction details for the float are given in Figure 2.

Source:

Construction and Use of Small Equipment for Farm Irrigation, by Carl M. Forsberg, James D. Metzger and John C. Steele, USOM/Turkey in cooperation with Turkish Ministry of Agriculture.

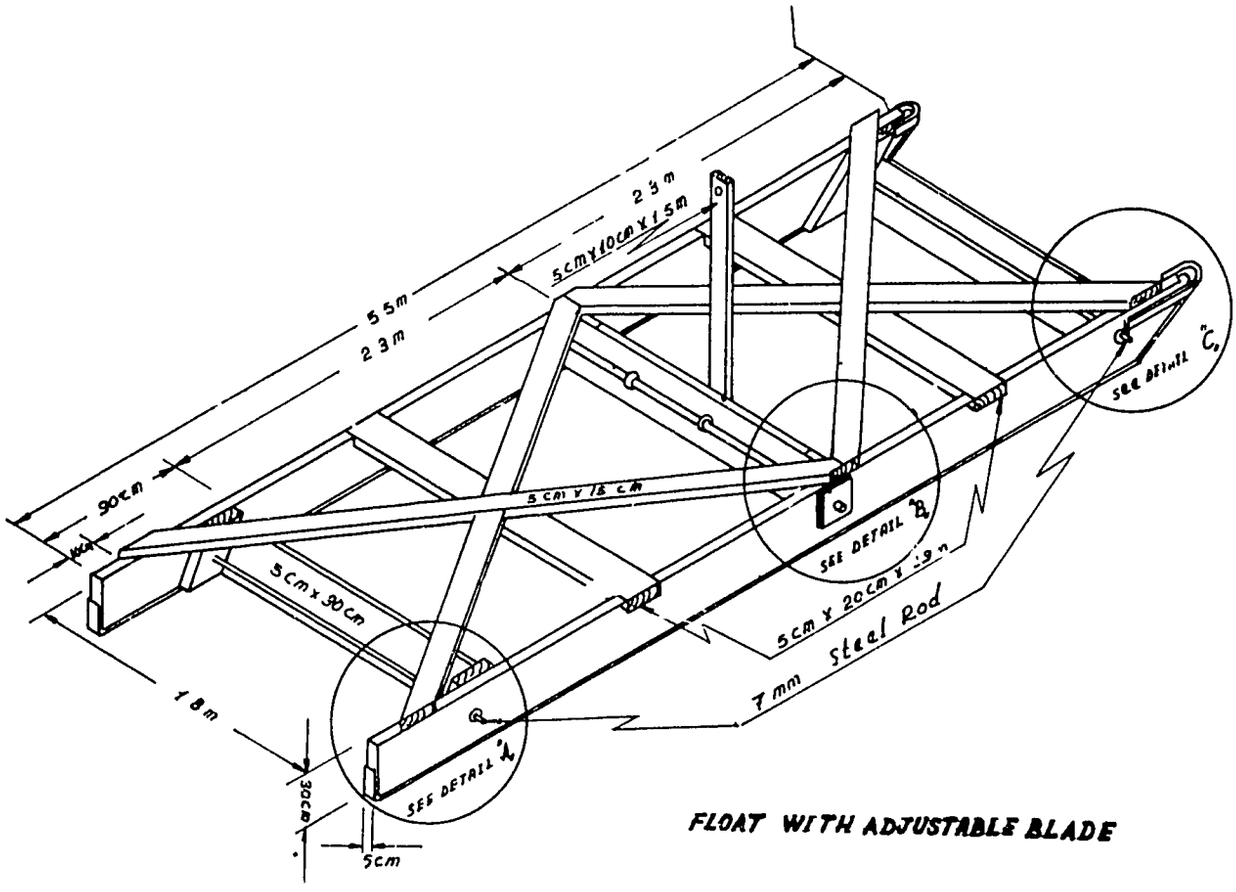

FLOAT WITH ADJUSTABLE BLADE

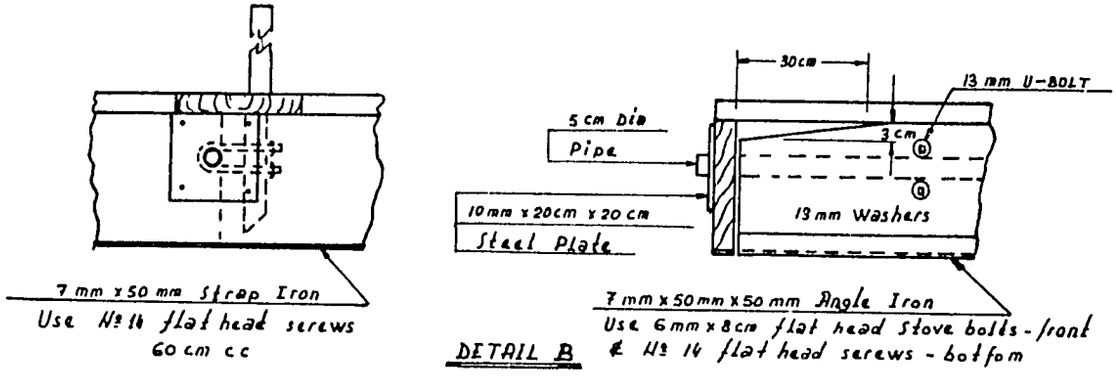

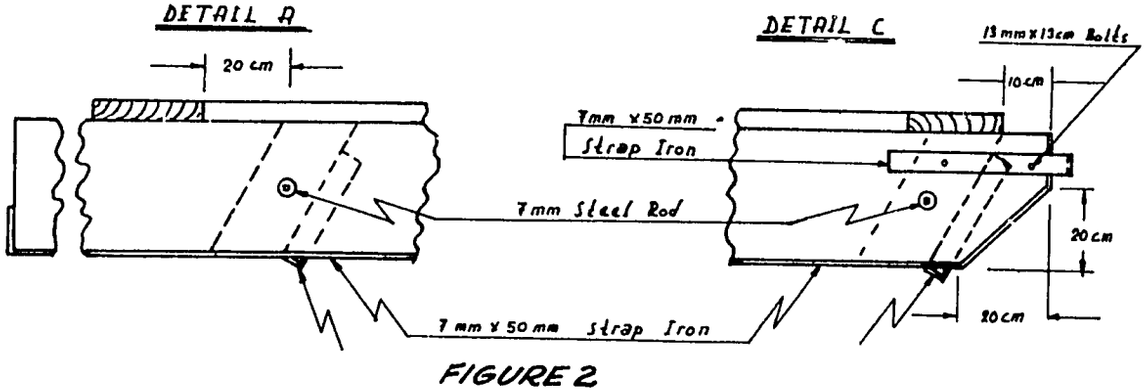

FIGURE 2

BUCK SCRAPER

This buck scraper may be used for leveling small humps of earth where the haul distance is short. It can be made by a small manufacturer or by a carpenter-blacksmith if equipment and materials are available.

This buck scraper has been designed for use with large horses or oxen.

The buck-scraper can be used for filling ditches or for smoothing border irrigation systems. After the border levee has been made, it is very important to smooth the area between and close to the levees. The buck scraper can be used very effectively for this purpose by shortening the hitch on one side and allowing the blade of the scraper to run at an angle, thus shoving the soil into the rough areas around the newly-built levee.

After using the fresno to move large amounts of soil from high spots to low spots, the surface of the cut and fill areas will usually be rough. The buck scraper is useful for smoothing out the uneven spots caused by the fresno.

Earth moving may be aided by loosening the soil to be moved by plowing before using the buck scraper.

The buck scraper is loaded by pushing down on the handle as the equipment moves forward. The handle must be held down while the soil is being transported. The scraper is unloaded by lifting up on the handle. A shallow spread is made by lifting the handle slightly and a deeper spread by pushing the handle farther forward.

The most common hitches with the buck scraper are:

- 2 oxen
- 2 horses
- 3 horses

The buck scraper may be made in different sizes according to the available power.

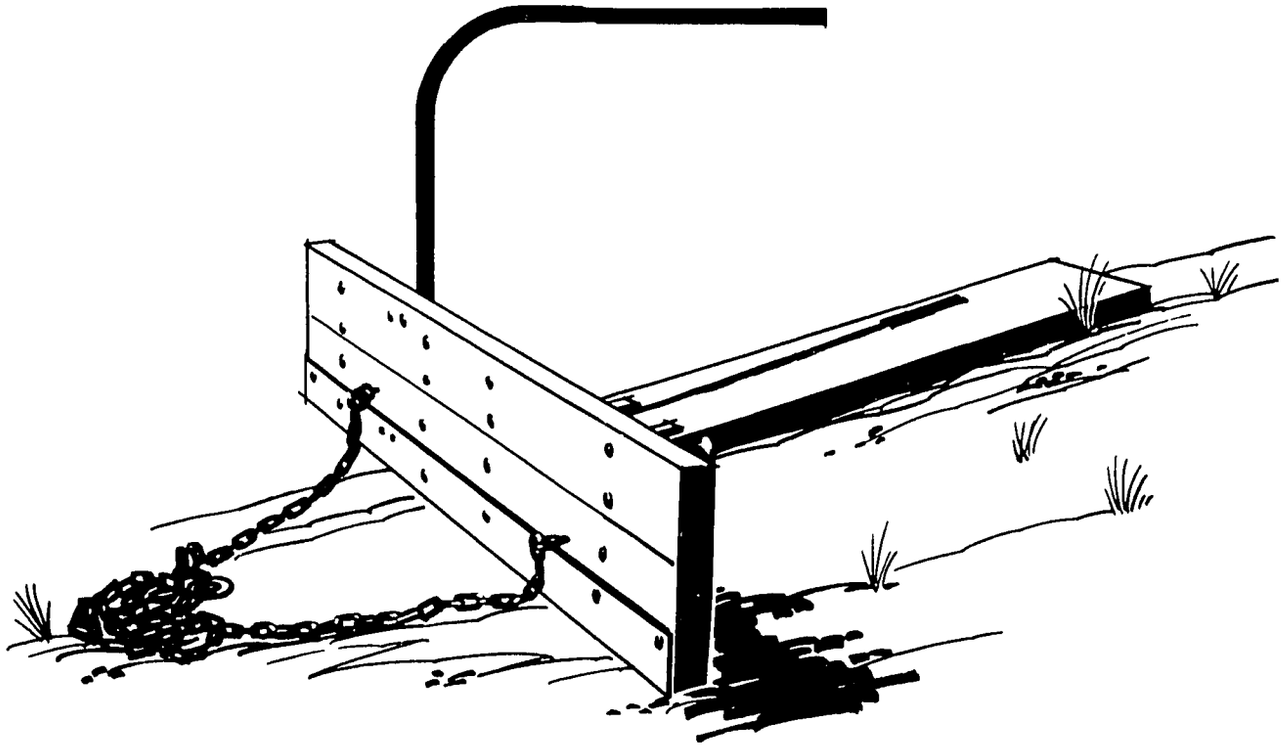

FIGURE 1
BUCK SCRAPER FOR WET AND DRY LEVELING

Tools and Materials

1 buck board, 5cm x 30cm x 183cm (2" x 12" x 6')

1 trailer board, 5cm x 30cm x 122cm (2" x 12" x 4')

1 iron pipe handle, 3cm x 2cm (3/4" x 23/32")

1 strap iron cutting edge, 6mm x 10cm x 183cm (1/4" x 4" x 6')

4 strap iron hinges, 6mm x 4cm x 30cm (1/4" x 1 9/16" x 12")

2 strap iron, 6mm x 4cm x 30cm (1/4" x 1 9/16" x 12")

2 strap iron pipe clamps, 6mm x 4cm x 15cm (1/4" x 1 9/16" x 6")

2 band strap iron pipe clamps, 6mm x 4cm x 20cm (1/4" x 1 9/16" x 7 7/8")

1 bolt for hinge, 16mm x 46cm (5/8" x 18 1/8")

2 eye bolts, 16mm x 9cm (5/8" x 3 1/2")

2 carriage bolts, 13mm x 13cm (1/2" x 5 1/8")

4 carriage bolts, 13mm x 10cm (1/2" x 4")

22 carriage bolts, 13mm x 8cm (1/2" x 3 1/8")

2 washers, 16mm (5/8")

28 washers, 13mm (1/2")

1 chain or cable hitch, 5mm (3/16")

Source:

Construction and Use of Small Equipment for Farm Irrigation, by Carl M. Forsberg, James D. Metager and John C. Steele, USOM/Turkey in cooperation with Turkish Ministry of Agriculture.

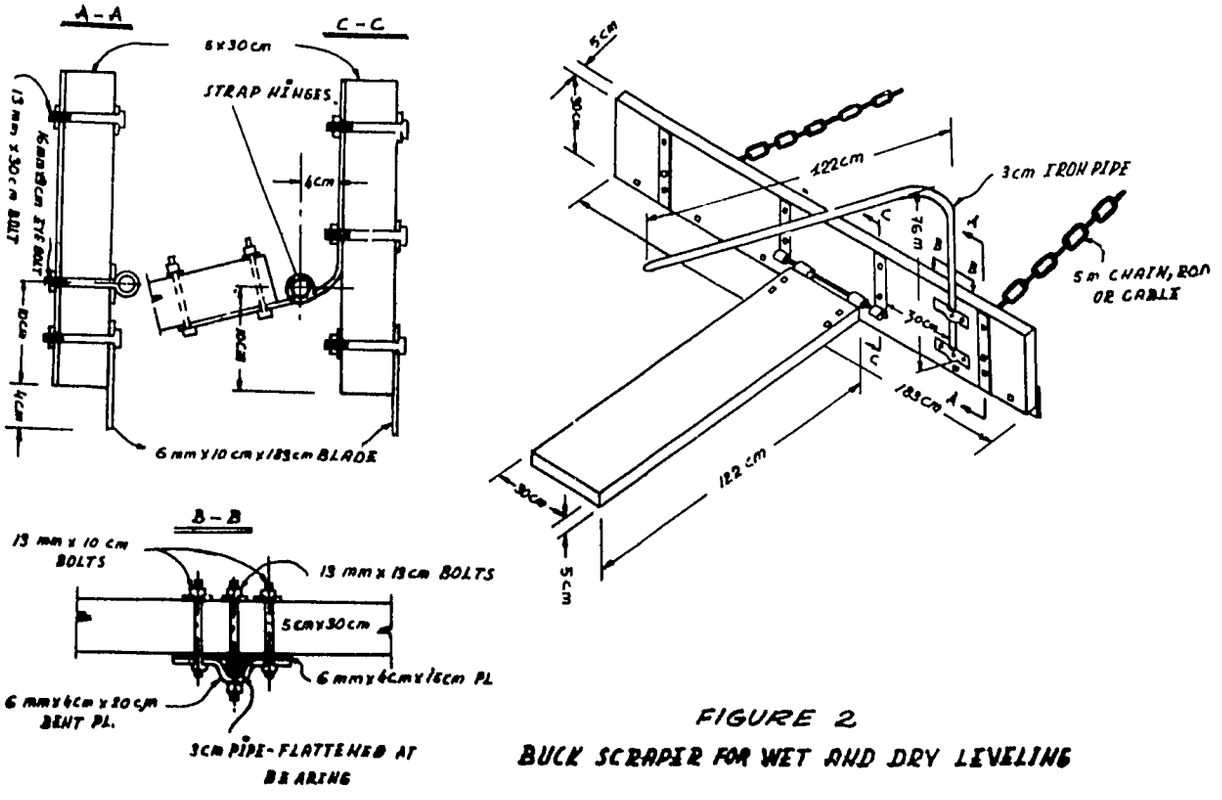

FIGURE 2
BUCK SCRAPER FOR WET AND DRY LEVELING

V-DRAG FOR PLOWING DITCHES AND BUILDING LEVEES

The V-Drag is used for making ditches for irrigation and drainage of fields and roads. It can also be used to make levees (banks) or borders for border irrigation. The V-Drag can be made locally by carpenter-blacksmiths or small manufacturers if materials are available.

Materials

(See Figure 2 for list of materials)

Construction details are given in Figure 2.

Using the V-Drag for Plowing Ditches

After the desired ditch line has been established by means of a level or transit, the plow may be used to make a furrow where the line has been staked. Plow down one way, then turn and plow back again in the same furrow but throwing the soil the other way.

When the furrow has been made by plowing down and back, use the V-Drag to move the soil out of the furrow. By making a complete round (down and back) the soil can be thrown out on both sides of the ditch. By alternately plowing and using the V-Drag to throw the soil out, any desired depth of ditch can be obtained.

The method of hitching the animals is important. If two horses are used, it is necessary to hitch them far enough apart so that both can walk outside the ditch. If two oxen are used it is important that the yoke be long enough to

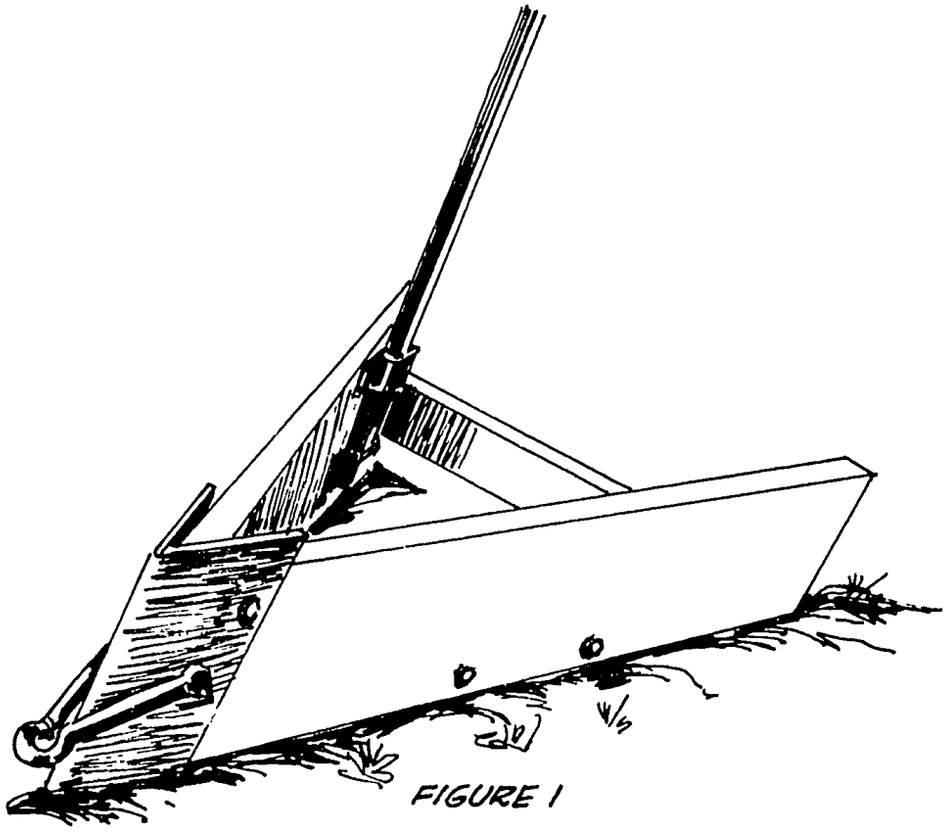

FIGURE 1

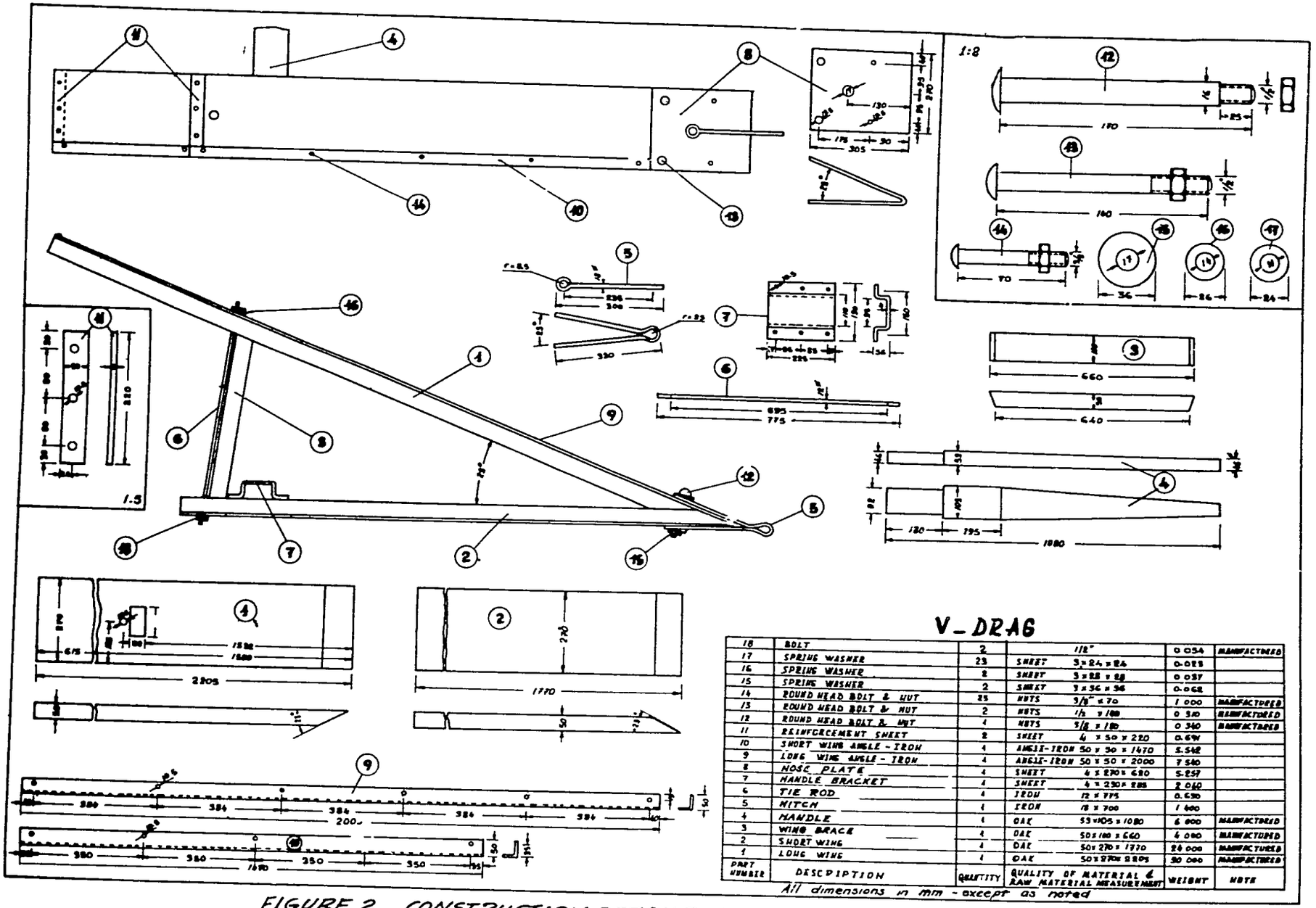

PART NUMBER	DESCRIPTION	QUANTITY	QUALITY OF MATERIAL & RAW MATERIAL MEASUREMENT	WEIGHT	NOTE
18	BOLT	2	1/2"	0.054	MANUFACTURED
17	SPRING WASHER	23	SHEET 3 x 24 x 24	0.023	
16	SPRING WASHER	2	SHEET 3 x 28 x 28	0.037	
15	SPRING WASHER	2	SHEET 3 x 36 x 36	0.062	
14	ROUND HEAD BOLT & NUT	25	NUTS 3/8" x 70	1.000	MANUFACTURED
13	ROUND HEAD BOLT & NUT	2	NUTS 1/2 x 180	0.510	MANUFACTURED
12	ROUND HEAD BOLT & NUT	4	NUTS 5/8 x 180	0.360	MANUFACTURED
11	REINFORCEMENT SHEET	2	SHEET 4 x 50 x 220	0.694	
10	SHORT WING ANGLE - IRON	4	ANGLE-IRON 50 x 50 x 1470	5.542	
9	LONG WING ANGLE - IRON	4	ANGLE-IRON 50 x 50 x 2000	7.540	
8	NOSE PLATE	4	SHEET 4 x 270 x 680	5.257	
7	HANDLE BRACKET	4	SHEET 4 x 230 x 285	2.060	
6	TIE ROD	4	IRON 12 x 775	0.630	
5	HITCH	1	IRON 18 x 700	1.400	
4	HANDLE	1	OAK 53 x 105 x 1080	6.000	MANUFACTURED
3	WING BRACE	4	OAK 50 x 100 x 660	4.000	MANUFACTURED
2	SHORT WING	4	OAK 50 x 270 x 1770	24.000	MANUFACTURED
1	LONG WING	4	OAK 50 x 270 x 2205	30.000	MANUFACTURED

All dimensions in mm - except as noted

FIGURE 2 CONSTRUCTION DETAILS FOR THE V-DRAG

permit each animal to walk on the outside of the ditch.

If the soil is hard and more power is required, 3-horses can be used and one horse can walk in the ditch and one on each side.

The depth of cut made by the V-Drag can be adjusted to the available power. Shortening the hitch will reduce the depth of cut as will shifting your weight to the back of the drag. Either lengthening the hitch or shifting your weight to the front will increase the depth of cut.

The handle of the V-Drag can be used to vary the width of the ditch. Pressing down will widen it while lifting up will narrow the width.

Using the V-Drag to Build Levees or Borders for Border Irrigation Systems

After the desired location has been selected for constructing a levee, or border, the plow may be used to plow down and back twice and throw the soil into the border line. The V-Drag can then be used to crowd the soil into a ridge.

When a border irrigation system is constructed in this manner it is necessary to smooth around the border with a buck scraper (see page 203). If the hitch on the scraper is shortened on one side it will roll the dirt into the border.

The Hitch

The hitch on the V-Drag is the same for construction of a ditch or a border. Two horses, two oxen, or three horses are usually satisfactory.

Source:

Construction and Use of Small Equipment for Farm Irrigation, by Carl M. Forsberg, James D. Metzger and John C. Steele, USOM/Turkey in cooperation with Turkish Ministry of Agriculture.

MULTIPLE HITCHES

Multiple hitches or load eveners are necessary when more than one animal is used for pulling equipment to adapt the proper power to the load and the job. Correctly-made hitches enable each animal to do his share of the work and exert an even pull on a piece of equipment.

Various combinations of hitches may be used, according to the job. The most common hitches are:

- double trees, or 2-horse evener
- 3-horse evener
- 4-horse evener
- 6-horse evener

Figure 1 shows a four-horse evener and a three-horse evener. This illustration is helpful in reading the construction details in Figure 3.

The major parts of the hitches can be adapted for use with oxen/or bullocks. Figure 2 shows simpler eveners which can be used with horses, oxen or bullocks.

FIGURE 2

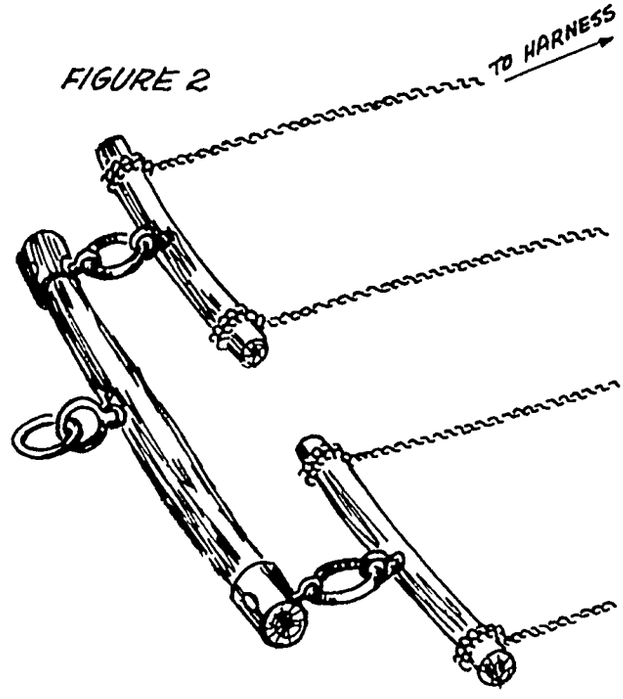

FIGURE 1

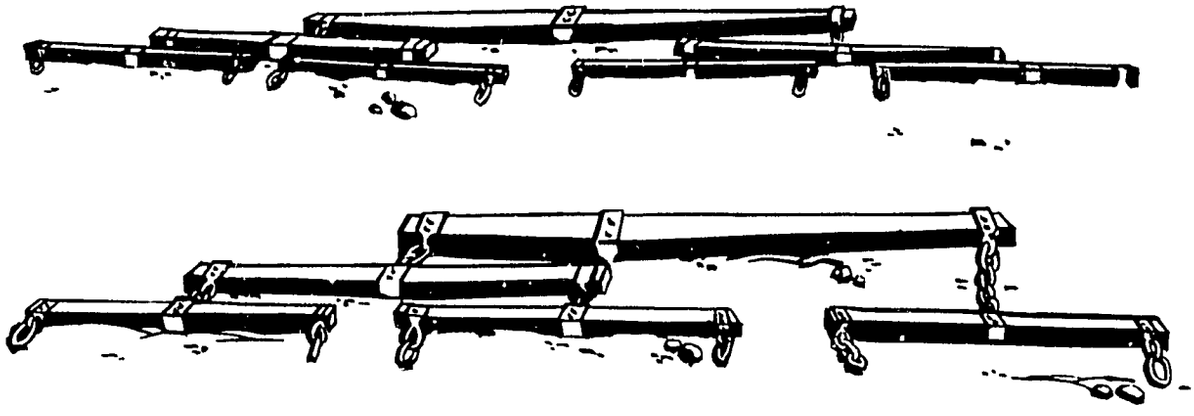

Tools and Materials

2-horse evener:

1 oak plank, 4cm x 10cm x 1 meter (1 9/16" x 4" x 39 3/8")

2 oak bars, 4cm x 6cm x 77cm (1 9/16" x 2 3/8" x 30 5/16")

4 strap iron, 10mm x 4cm x 22.5cm (3/8" x 1 19/16" x 8 7/8")

4 machine bolts with nuts and washers, 13mm x 8cm (1/2" x 3 1/8")

2 carriage bolts with nuts and washers, 10mm x 12cm (3/8" x 4 3/4")

3-horse evener:

1 oak plank, 4cm x 12cm x 1.52 meters (1 9/16" x 4 3/4" x 59 7/8")

1 oak bar, 4cm x 6cm x 77cm (1 9/16" x 2 3/8" x 30 15/16")

2 strap iron, 10mm x 4cm x 46.5cm (3/8" x 1 9/16" x 18 5/16")

2 strap iron, 10mm x 4cm x 34cm (3/8" x 1 9/16" x 13 3/8")

4 machine bolts with nuts and washers, 13mm x 8cm (1/2" x 3 1/8")

2 carriage bolts with nuts and washers, 10mm x 14cm (3/8" x 5 1/2")

plus material for one 2-horse evener

4-horse evener:

1 oak plank, 4cm x 16cm x 1.96 meters (1 9/16" x 6 5/16" x 78")

4 strap iron, 10mm x 4cm x 40cm (3/8" x 1 9/16" x 15 3/4")

4 machine bolts with nuts and washers, 13mm x 8cm (1/2" x 3 1/8")

2 carriage bolts with nuts and washers, 10mm x 18cm (3/8" x 7 1/16")

plus materials for two 2-horse eveners

6-horse evener:

1 oak plank, 6cm x 20cm x 2.84 meters (2 3/8" x 7 7/8" x 9' 3 3/4")

4 strap iron, 10mm x 5cm x .45cm (3/8" x 12.5cm x 5/32")

2 machine bolts with nuts and washers, 20mm x 8cm (3/4" x 3 1/8")

2 machine bolts with nuts and washers, 20mm x 10cm (3/4" x 4")

2 carriage bolts with nuts and washers, 10mm x 22cm (3/8" x 8 5/8")

plus materials for two 3-horse eveners

Clevis (U-shaped piece by which draft animal is connected to hitch)

1 clevis stock, 20mm x 70cm (3/4" x 27 1/2")

1 machine bolt with nut and washers, 20mm x 12cm (3/4" x 4 3/4")

(one clevis is needed for each horse)

Sources:

Construction and Use of Small Equipment for Farm Irrigation, by Carl M. Forsberg, James D. Metzger and John C. Steele, USOM/Turkey, in cooperation with the Turkish Ministry of Agriculture.

Farm Implements for Arid and Tropical Regions, by H. J. Hoffen, Food and Agriculture Organization of the United Nations, Rome, 1960.

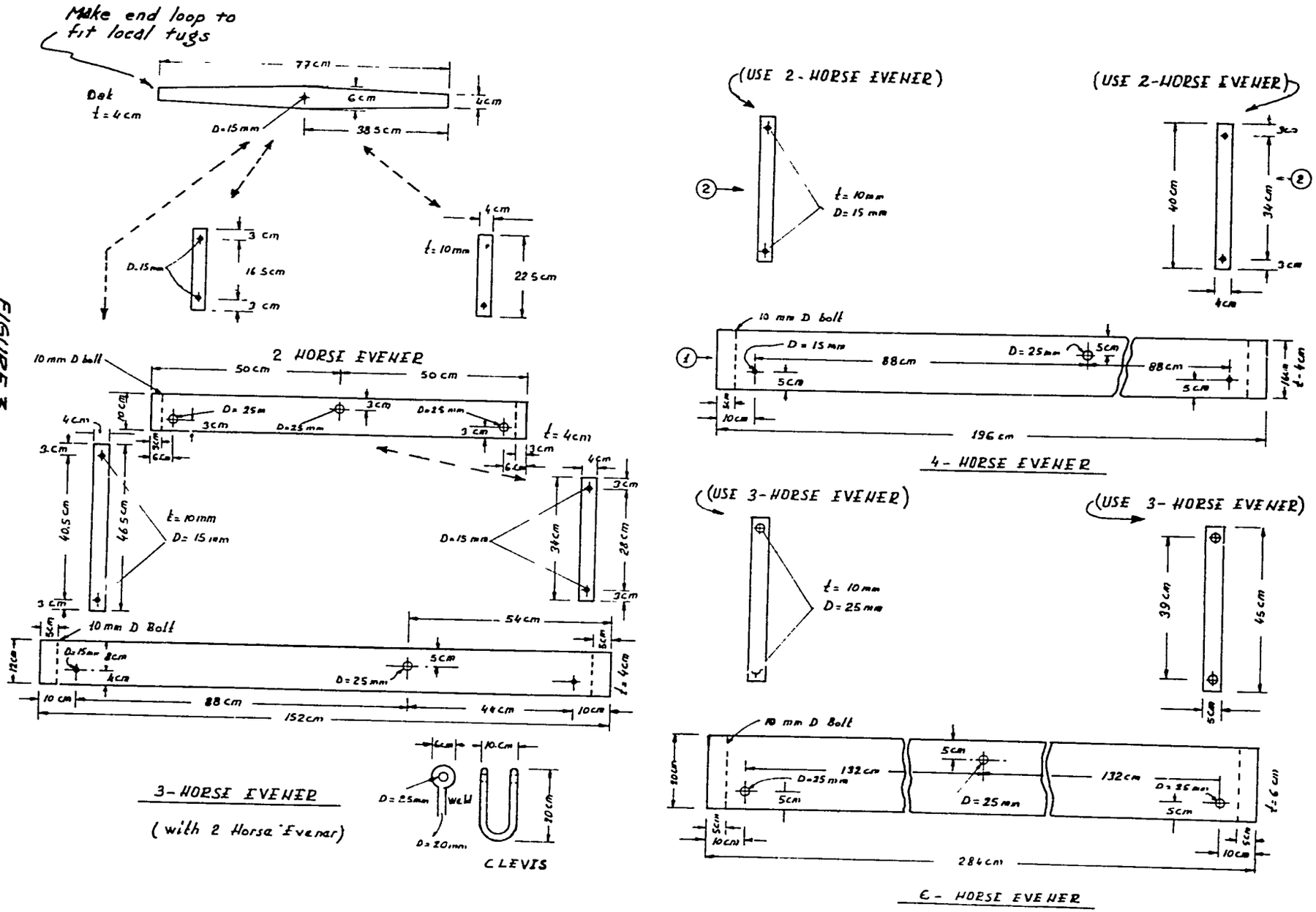

FIGURE 3
MULTIPLE HITCHES: CONSTRUCTION DETAILS FOR HITCHES AND CLEVIS

Irrigation

SIPHON TUBE

The metal siphon tube described here can be used for irrigation (see Figure 1). It can be easily made and repaired by tinsmiths. A siphon can also be made from a piece of rubber hose or by bending a piece of plastic tube.

Tools and Materials

Galvanized sheet metal

Tinsmith tools: solder, tinsnips, hammers, anvil

Construction details are given in Figure 2.

The purpose of this siphon tube is to carry water out of a ditch without cutting a hole in the ditch bank. In many soils a small hole cut in the ditch bank soon becomes a large hole because of erosion. Imported plastic siphons are often expensive, easily broken and usually impossible for local people to repair.

There are several good ways to start a siphon tube. The simplest way is to put the tube in the ditch until it fills with water. Holding one hand over the end of the tube, so that air cannot get in, lift the tube out and place it as shown in Figure 1. Be sure the other end of the tube does not come out of the water while placing the tube. When the tube is in place, remove the hand and the water will begin to flow. The end of the tube outside the ditch must be lower than the level of the water in the ditch.

Source:

Dale Fritz, VITA Volunteer, Washington, D.C.

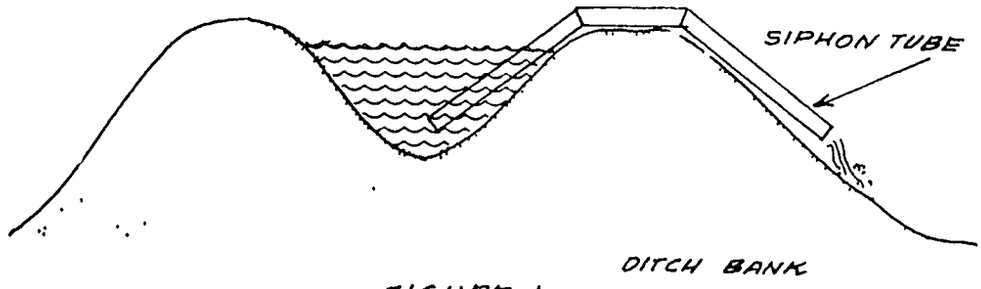

FIGURE 1

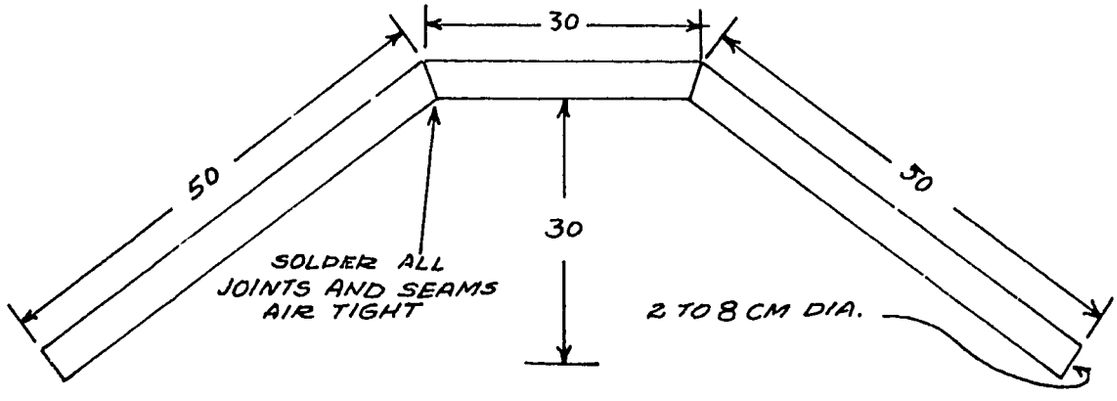

FIGURE 2

USING TILE FOR GARDEN IRRIGATION AND DRAINAGE

An irrigation or drainage system made with the concrete tiles described here can help to keep a garden in production during both wet and dry seasons. It will make good use of irrigation water and, during the wet season, will drain off surplus water.

The entries which follow explain how to make a concrete-tile machine and how to use the machine for making tiles.

Drainage and underground irrigation using these tiles have worked satisfactorily in Panama.

In regions of heavy rainfall, the tile drainage can be combined with good surface drainage by making raised beds in gardens, shoveling out 30cm (1') wide pathways which will be 15cm (6") lower than the beds. Put the beds over the tile lines and make them 1 meter (3') wide. Use the pathways also as drainage ways and connect them with a good outlet to lower ground.

This system of under-ground irrigation (and drainage) can serve under fruit trees or gardens. It can also be used around the foundations of buildings where drainage is a problem.

Tools and Materials

Concrete tile
Cement for mortar, concrete
Sand for mortar and tile covering
Gravel or crushed stone for concrete
Wood for plugs
Optional - Brass outlet box collar
Shovels, concrete-mixing tools

Concrete irrigation tiles, whether for irrigation or drainage or both are laid 30cm (12") deep in lines 1.2m (4') apart (the latter measurement depending on the texture of the soil: more distance between lines for clay soils and less for sandy soils). The garden should be almost level, with good surface drainage. By making upright "elbows" at the ends of the lines, one can give access to the tile at either end. A garden hose can deliver the water from its source to the upright ends of the tile lines. While tile lines must be level, they do not have to be straight; they can follow a contour line or double back to make a more convenient system of installation, with four or more lines connected to make one unit. (See Figure 2.)

In dry seasons, the tiles supply water to the plant roots. See Fig-

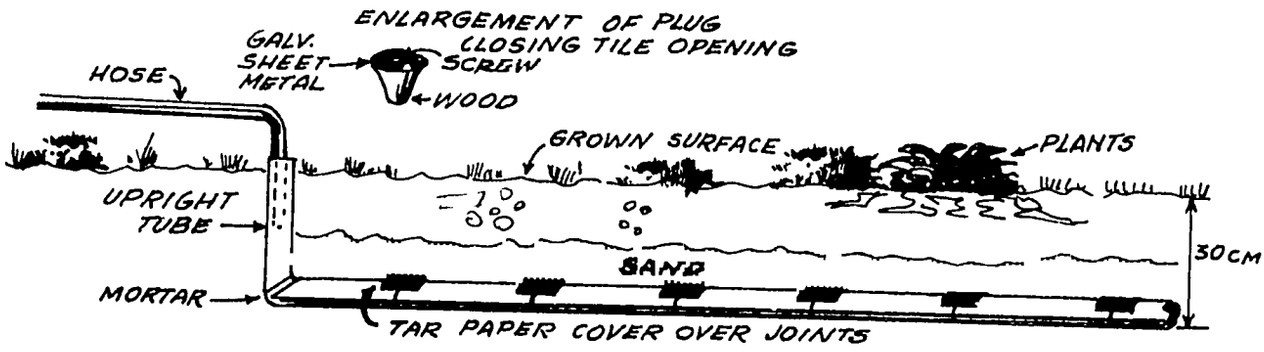

FIGURE 1

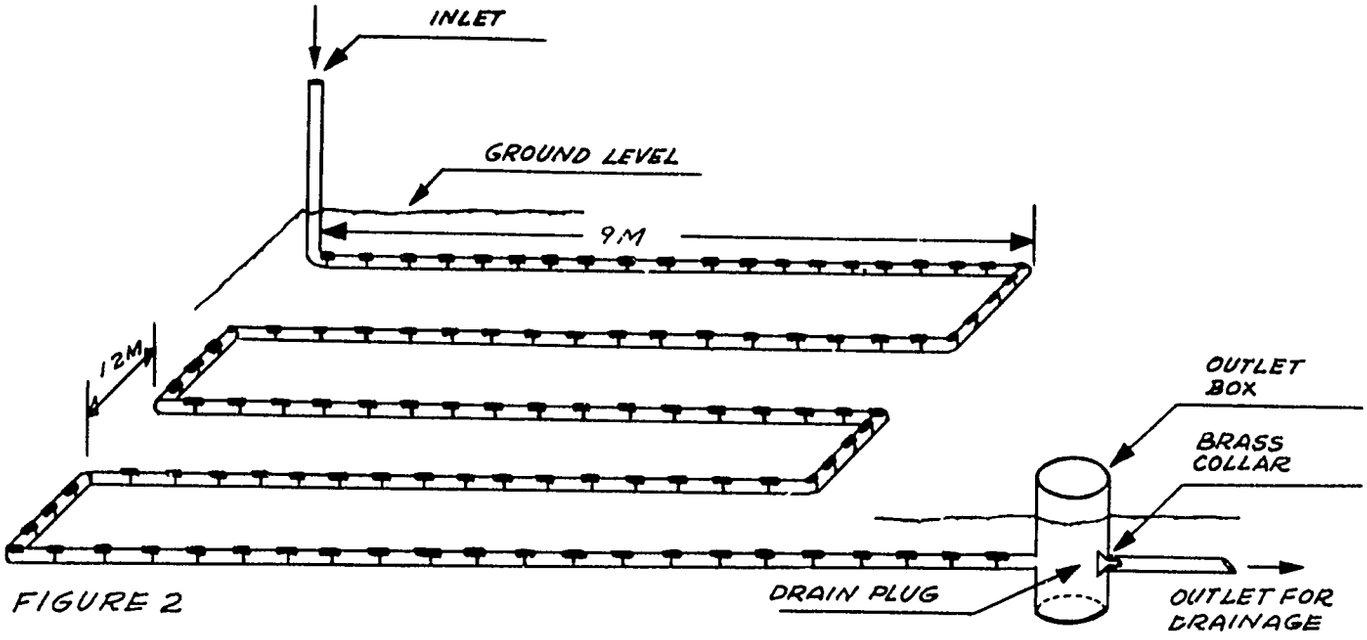

FIGURE 2

ure 1. In wet seasons, the water escapes through the sand and gravel around the tile and follows the concrete tube formed by the tiles to a drainage outlet (see Figure 2). While passing downward through the soil to the tile, the water draws air into the soil and supplies oxygen to the helpful bacteria and to the plant roots. Seedlings cannot grow without oxygen. (Plants do not grow in a flower pot without a drain hole in the bottom, because they do not get oxygen.)

How to Install Concrete Irrigation Tile

1. Grade the garden plot to within 5cm to 7cm (2" to 3") of level and make trenches 30cm (12") deep, according to the design in Figure 2. This will give an even distribution of the water. Check the bottom of the tile ditches to be sure they are level. Only the drainage outlet will have a drop.

2. Lay the tile, end to end, in the bottom of the trench. Use an "elbow" (made of two tiles cut to 45-degree angle) to make a place for putting the hose at one end, and use other elbows to turn corners.

3. Put a piece of tar paper (or used linoleum) over each joint (see Figure 3) to keep the dirt out of the line. A piece 5cm x 12.5cm (2" x 5") is large enough. Cut with tin snips.

4. Cover the tile with sand to give the water an opportunity to soak out into the soil or (in the case of drainage), to seep into the tile. The bottom 12.5cm (5") of the trench are filled with sand or gravel (around the tile) and the top 17.5cm (7") are filled with soil.

5. Near the outlet, make an upright concrete box with two holes near the bottom to let drainage water run through and on out to an outlet. The box should be large enough so that one can reach in-

to it to install a plug in the drain side of the box when the system is used for irrigation. A brass or aluminum collar installed in the concrete will make it easier to close this hole completely and thus avoid a loss of water.

6. Put covers over both ends to keep out small animals (see Figure 1).

7. Do not water more frequently than once or twice a week, so that plant roots will not enter the tile line to obstruct it.

8. Be careful not to injure the tile with tillage equipment.

9. For irrigation the tile system is used with its drain plug securely closed (see Figure 2). Water is run into the line once or twice a week, by means of a hose, until the soil becomes moist. For drainage, simply pull the plug.

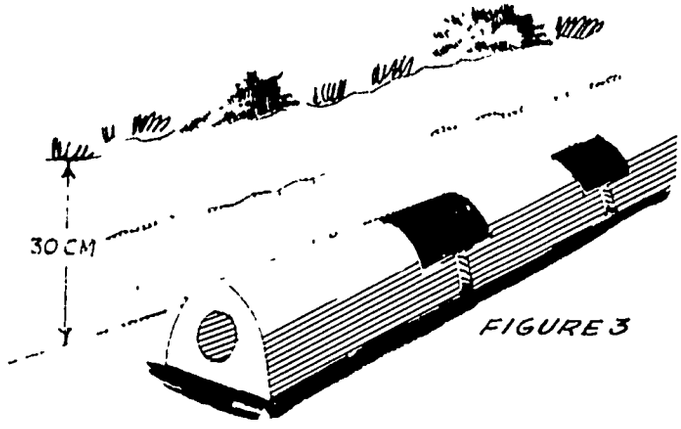

FIGURE 3

TAR PAPER OR LINOLEUM IS PLACED OVER EACH TILE JOINT TO KEEP DIRT OUT OF THE LINE.

Source:

A Machine for Making Concrete Tile for Irrigation and Drainage, by J. Oscar Brown, U.S. Department of Commerce, O.T.S. Information Kit, Vol. II #2, November, 1961.

MAKING A CONCRETE TILE MACHINE

This all-steel tile-making machine can be made of scrap metal in any shop with welding equipment. The machine makes 80 to 100 tiles to a sack of cement. One man can make about 300 tiles in an 8-hour day. Construction of the machine is a good welding project for students.

A tile-making machine made from wood is illustrated in Figure 15. The tiles made with this machine are the same size as those made with the all-metal machine.

Tools and Materials

See text

All the drawings of the form and its several parts in this entry show the form in its up-side-down, or emptying position.

The machine can be made of used or new materials. To make the form, it is desirable to have both electric and acetylene welding equipment, although either

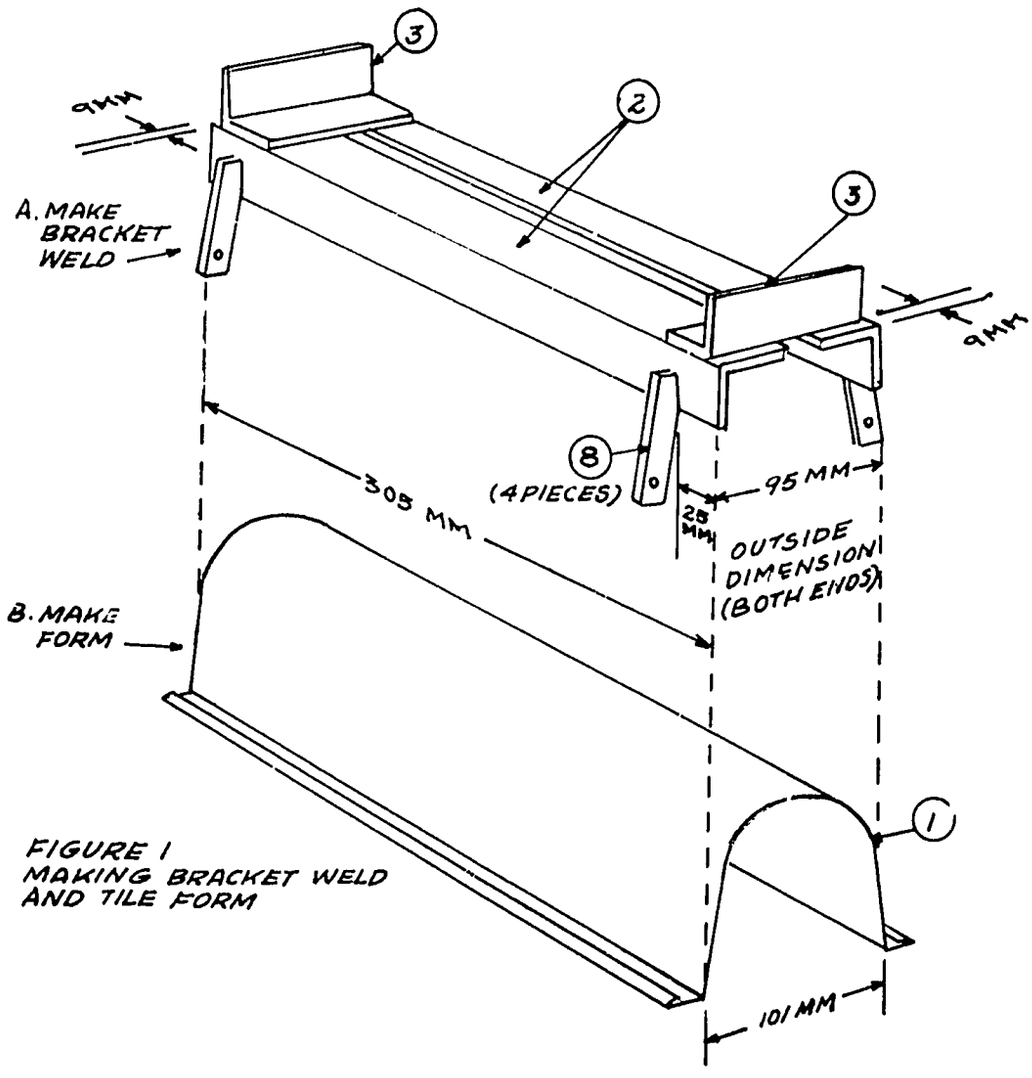

FIGURE 1
MAKING BRACKET WELD AND TILE FORM

will serve. The thicker parts are assembled by arc welding and the thinner parts have to be put through other parts before welding, as will be explained below. We shall refer to each individual part by its number, which appears on the sketches.

The assemblies made of parts No. 10, 11 and 12 (see Figures 8 and 14) are simply a convenient means of taking hold of the levers to open the end doors. These levers are made of parts No. 5 and 13 as described below and shown in Figures 9, 10 and 11 and they work against the two springs which hold the doors shut,--the tension being made sufficient to hold the doors closed against the force of tamping.

The hole in the end door is shown as 3mm (1/8") larger than the diameter of the pipe which shapes the interior surface of the concrete tubes. This 3mm (1/8") is an allowance of clearance necessary to keep the sand particles from making the pipe difficult to remove after the mortar is tamped around it. Greater clearance would hurt the uniformity of the tile. The finished tile should have a uniform 13mm (1/2") wall and part No. 1 must be shaped and so related to the pipe that the thickness of the tile wall will be correct (see Figure 6).

Parts No. 7 are bronze welded to the sides of No. 1 (see Figure 6). These parts, like other parts which touch the hands, should be dressed to a smoothness sufficient to avoid injury to the operator. The outside of the form should be well painted but the inside cannot be painted, as paint would cause the mortar to stick to the inside. When the form is not in use, the inside should be kept oiled.

The pipe may need to be dressed lightly in the lathe to make it easier to remove from the form after the mortar is tamped around it. In turning, it is advisable to make the end opposite the handle end 0.5mm (1/64") smaller, as this will facilitate its removal in the emptying process. This lathe work should be done after the end of the pipe opposite the handle end has been welded shut with a disc of galvanized sheet metal. If this end is not closed, cement will enter the pipe and thus be spilled into the inside of the tile to become an obstruction there.

Part No. 19 is a wire or 3mm (3/32") diameter steel welding rod with the shape shown in Figure 2, but one of the eyes has to be formed after the part has been threaded through the hole in part No. 8 (see Figures 1 and 8).

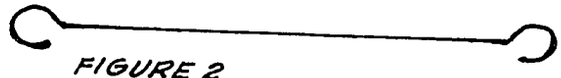

FIGURE 2
SHAPE OF PART NO. 19

The following paragraphs are listed by part numbers:

1. The inside walls of the form are made of 16-gage galvanized iron. Part No. 1 as shown in Figure 1 is made from a sheet cut to a true rectangle, 26.6cm x 30.5cm (10 1/2" x 12"). This is bent to shape by putting a 6mm (1/4") fold on each of the 30.5cm (12") sides; bending 19mm (3/4") more of same sides to a right angle; and then shaping the sheet according to the curve shown in Figure 3. This lining is then fitted into the cradle which is made of parts No. 2 and 3. Parts No. 6 will be the end doors, which are also made of 16-gage sheet iron. The inside of the form should not be painted, as this interferes with its operation.

2. For part No. 2, two pieces of angle iron, 38mm x 38mm x 3mm x 30.5cm (1 1/2" x 1 1/2" x 1/8" x 12") are

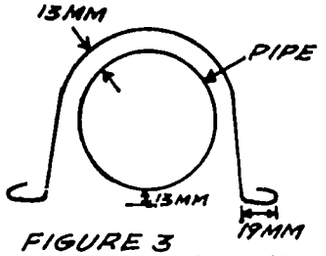

FIGURE 3
SHAPING PART NO. 1

needed.

3. Angle iron, 38mm x 38mm x 5mm (1 1/2" x 1 1/2" x 3/16"), 95mm (3 3/4") long. Two are needed. Parts No. 2 and 3 are welded together to form the cradle. Parts No. 8 are welded in place on parts No. 2 and corrections are made for shape before No. 1 is tack welded into the cradle which has thus been formed. The design above gives some idea of final relationship to be kept between the sheet metal lining of the form and the metal pipe. Notice that the tile wall will be uniformly 13mm (1/2") thick. See Figures 4 and 8.

4. Mild steel rods, 10mm x 15.2cm (3/8" by 6"). See Figure 13. Two are needed. These are welded in place to make the form stand a little taller so the levers will not touch the work bench while the mortar is being tamped into the form. They also provide a wider base.

5. Mild steel rods, 10mm x 22.9cm (3/8" x 9"). See Figure 10. Four are needed. These are bent to form the levers and are welded into pairs by means of the connecting piece, No. 13. See Figure 9. Notice the tiny appendages which are welded to the handle end of the levers. These are to keep the hand hold from turning or sliding endwise from its

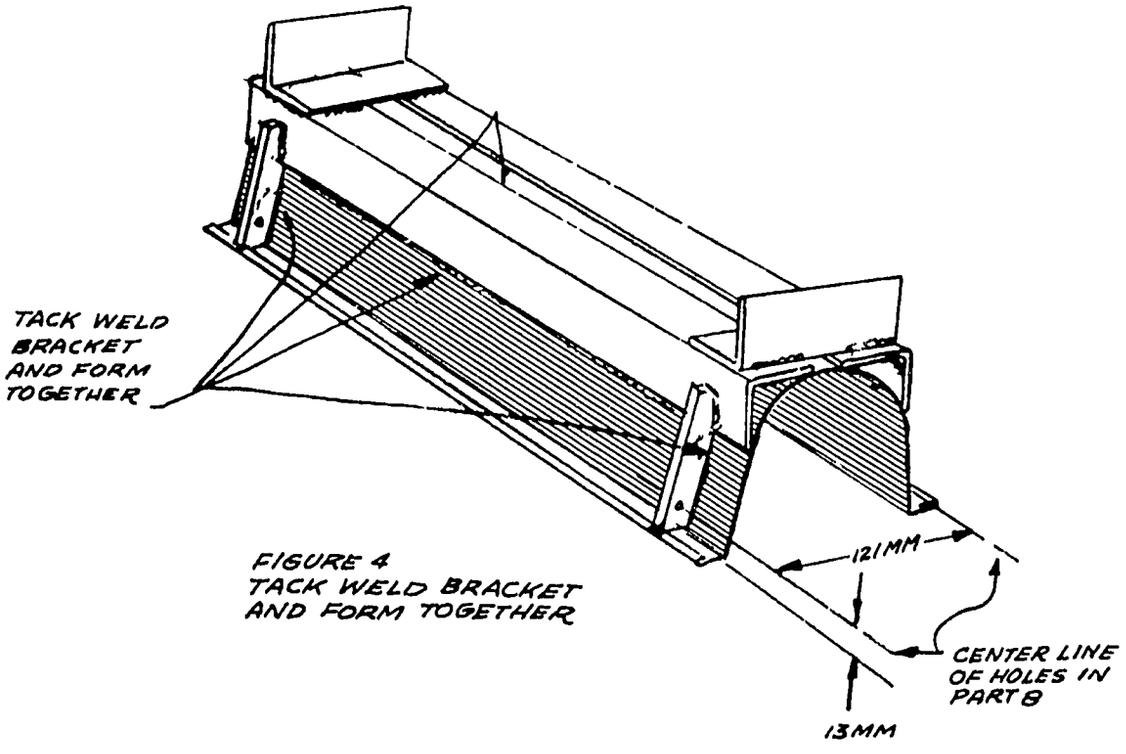

FIGURE 4
TACK WELD BRACKET
AND FORM TOGETHER

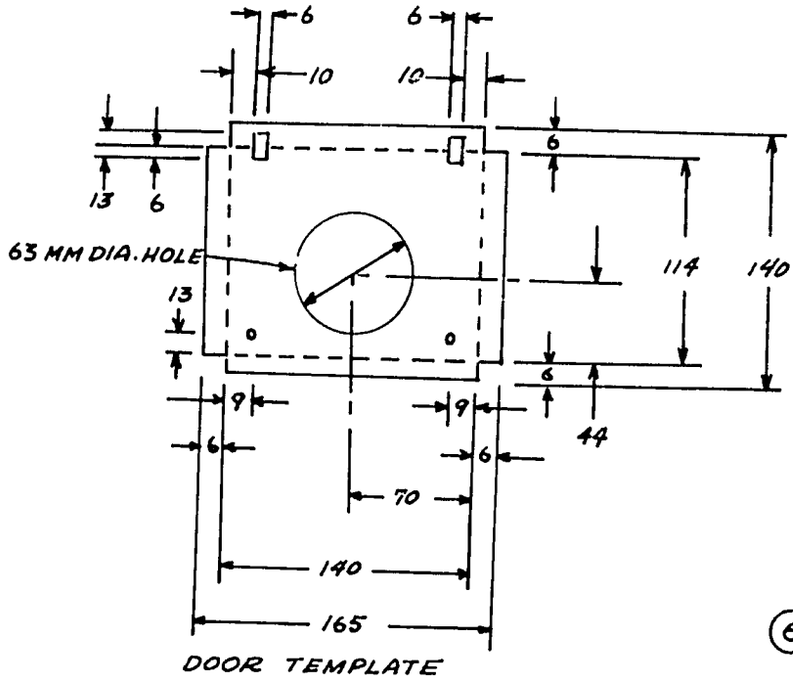

DOOR TEMPLATE

FIGURE 5 MAKE TWO DOORS

(ALL DIMENSIONS IN MM)

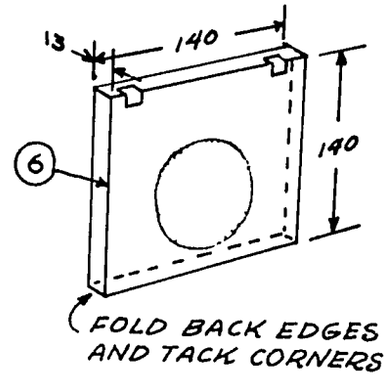

proper position. By the "hand hold" we mean the assembly made of Parts No. 10, 11 and 12.

6. Galvanized sheet metal, 16-gage, 14cm x 16.5cm (5 1/2" x 6 1/2"). Two are needed. These are the doors and the parts which hold the center pipe in its proper position. They should be cut and shaped after Part No. 1 has been tack-welded in its place. See Figure 5.

7. Galvanized sheet metal, 16-gage, 38mm x 10.2cm (1 1/2" x 4"), bent to angle as shown in Figure 6. Two are needed. These are handles for lifting the form. They are dressed smooth and bronze welded to the sides of No. 1 after the doors are properly installed as explained under No. 15 below.

8. Mild steel bar, 19mm x 6mm x 7cm (3/4" x 1/4" x 2 3/4"). Four are needed. See Figure 1. They are welded to No. 2 to complete the cradle for the lining of the form. Then the lining, part No. 1 is welded to No. 8 at the fold in the edge of No. 1. Check to see that the space for the thickness of the tile wall remains 13mm (1/2").

9. Screen door spring, cut into coils as shown, 14cm (5 1/2") long with the end loops bent out to form eyes. Two are needed. See Figure 7.

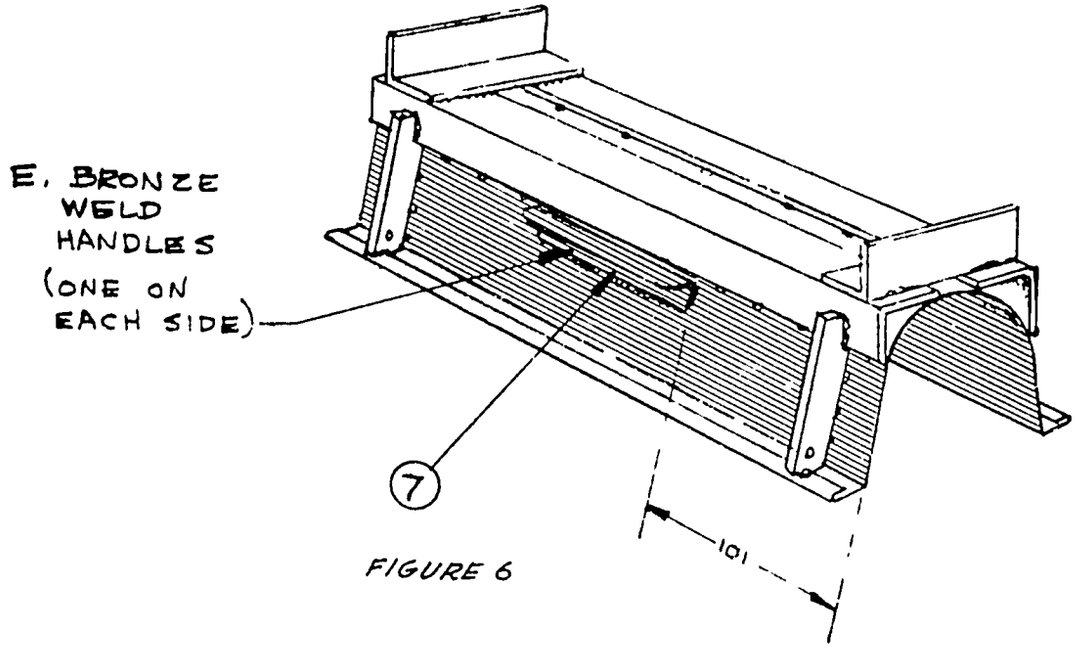

FIGURE 6

10. Channel iron, 31mm x 19mm x 8.2cm (1 1/4" x 3/4" x 3 1/4"). Two are needed. Countersink hole for screw head. Dress parts No. 10 and 11 smooth as they are handles.

11. Strap iron, 2.5cm x 3mm x 8.2cm (1" x 1/8" x 3 1/4"). Two are needed. See Figures 8 and 14. Drill and thread hole to match the screw hole in part No. 10. Make guide holes for the round appendages which are welded to the end of the levers, No. 5. The appendage on No. 5 is made by sawing off a 10mm (3/8") length of 10mm (3/8") diameter rod and bronze welding it to the end of the handle as shown.

12. Machine screw, flat head, 6mm x 19mm (1/4' x 3/4"). Two are needed. This unites No. 10 and 11.

13. Mild steel rod, 10mm x 12.7cm (3/8" x 5"). Two are needed. See Figure 11. Parts No. 5 are made in pairs by welding to the ends of part No. 13. Before welding, insert part

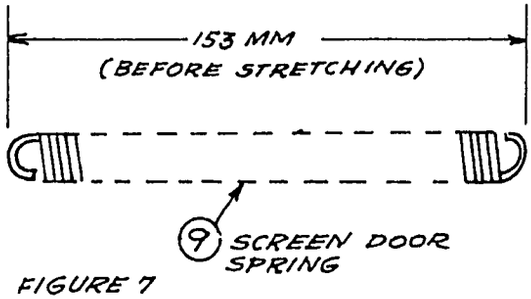

FIGURE 7
MAKE TWO SPRINGS

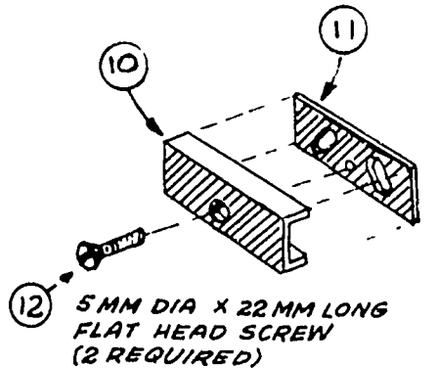

FIGURE 8

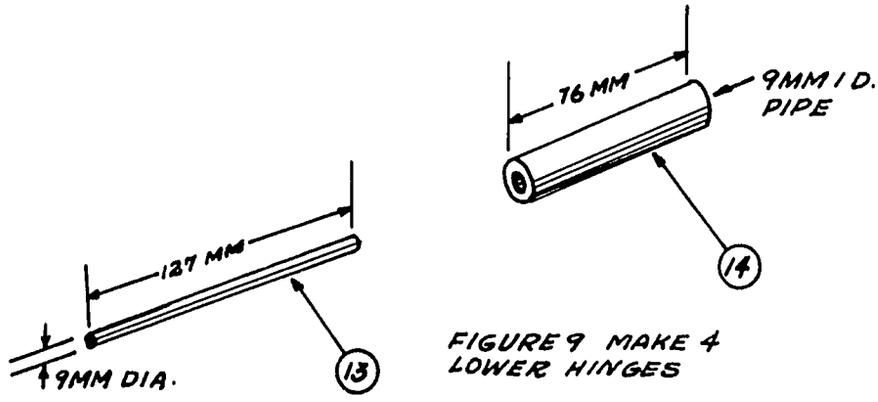

FIGURE 9 MAKE 4 LOWER HINGES

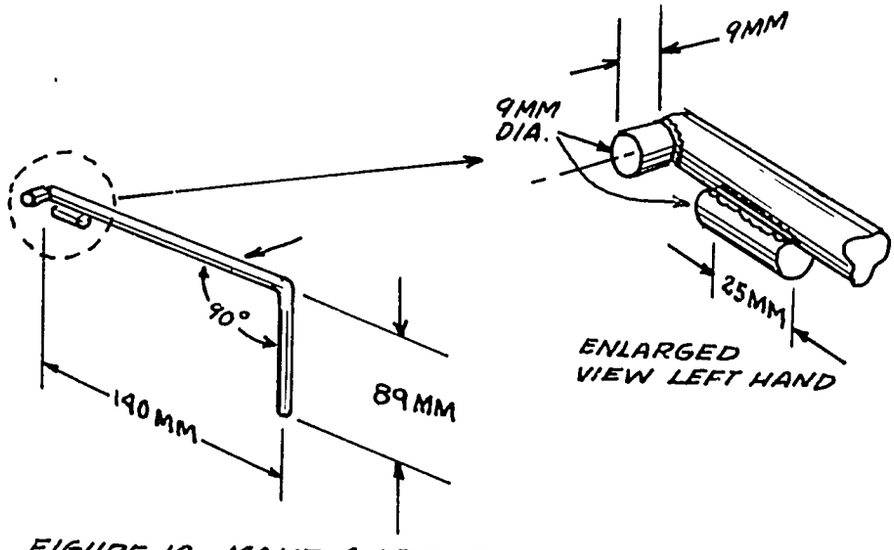

FIGURE 10 MAKE 4 LEVERS, 2 RIGHT HAND AND 2 LEFT HAND

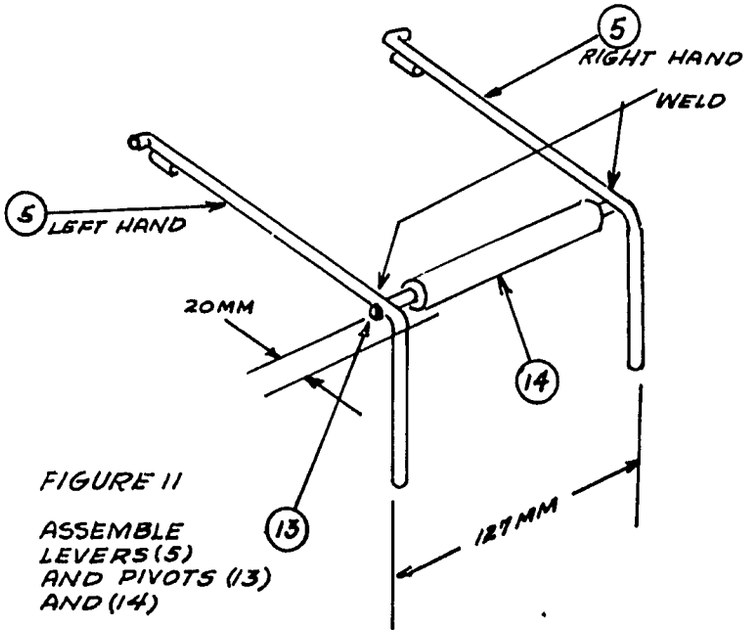

FIGURE 11

ASSEMBLE LEVERS (5) AND PIVOTS (13) AND (14)

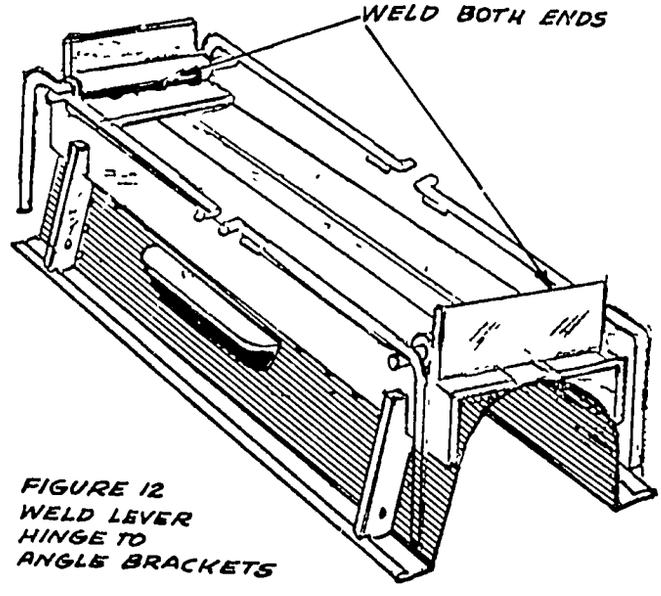

FIGURE 12 WELD LEVER HINGE TO ANGLE BRACKETS

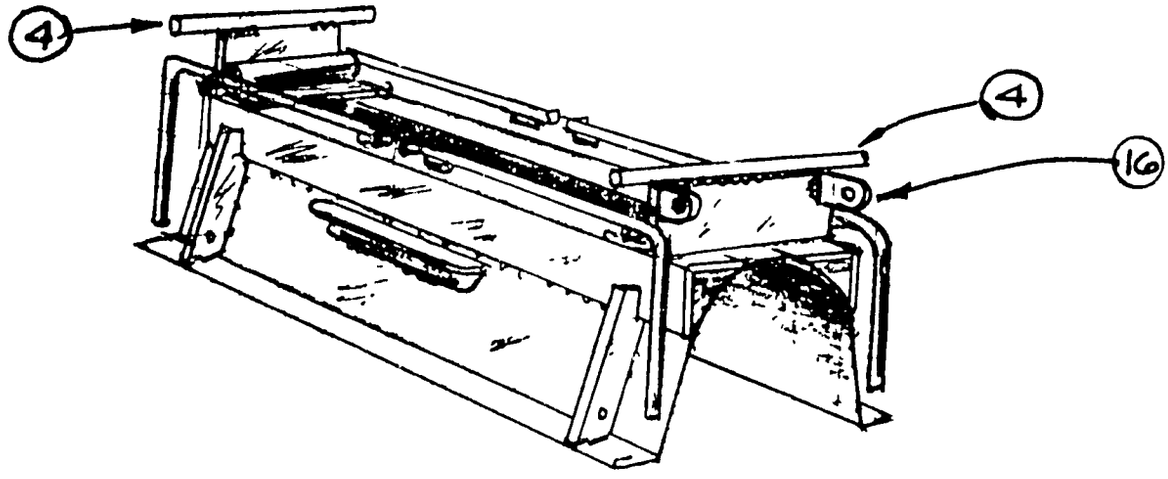

FIGURE 13 WELD ON HINGE PIECES (16) ON BOTH ENDS USING DOORS (6) AS GUIDES. ALSO WELD ON TWO RODS (4).

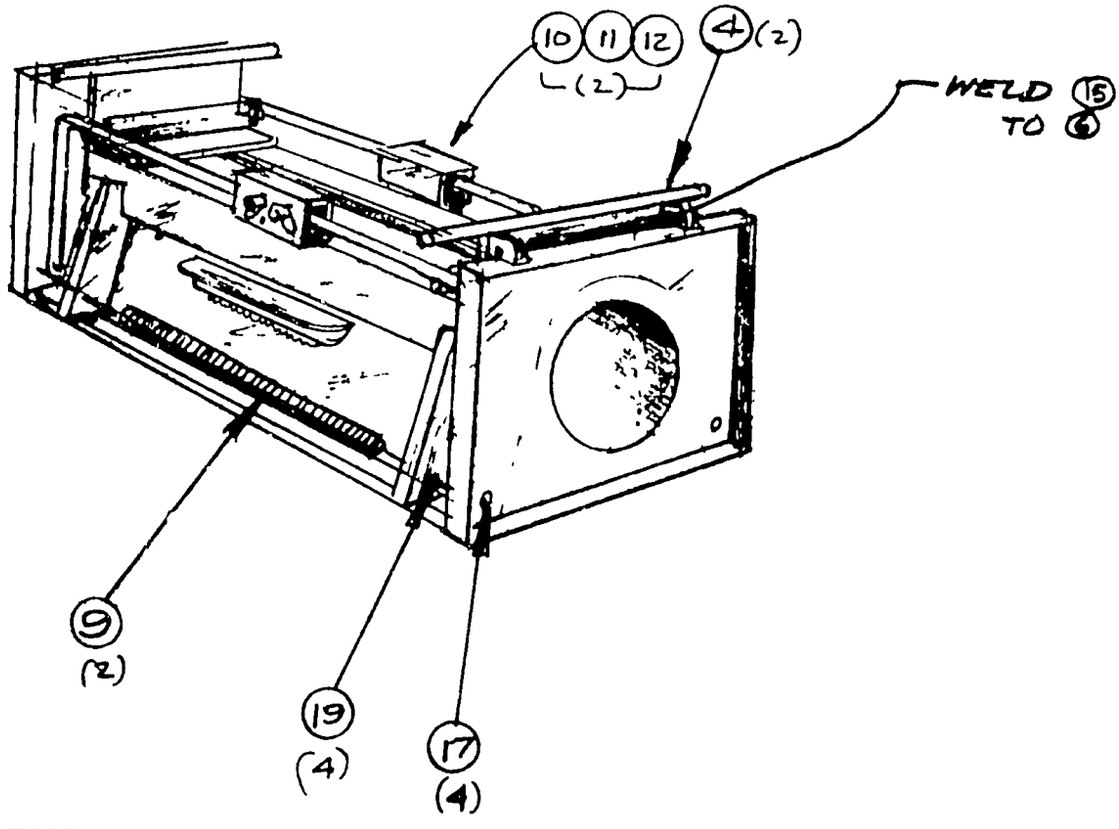

FIGURE 14. ATTACH DOORS WITH HINGEPIN (15), WELD IN PLACE, AND PUT SPRINGS (9), CONNECTORS (19), AND ATTACHMENTS (17) IN PLACE. UNIT IS NOW COMPLETE EXCEPT FOR PARTS 10, 11 AND 12, WHICH NOW CAN BE INSTALLED.

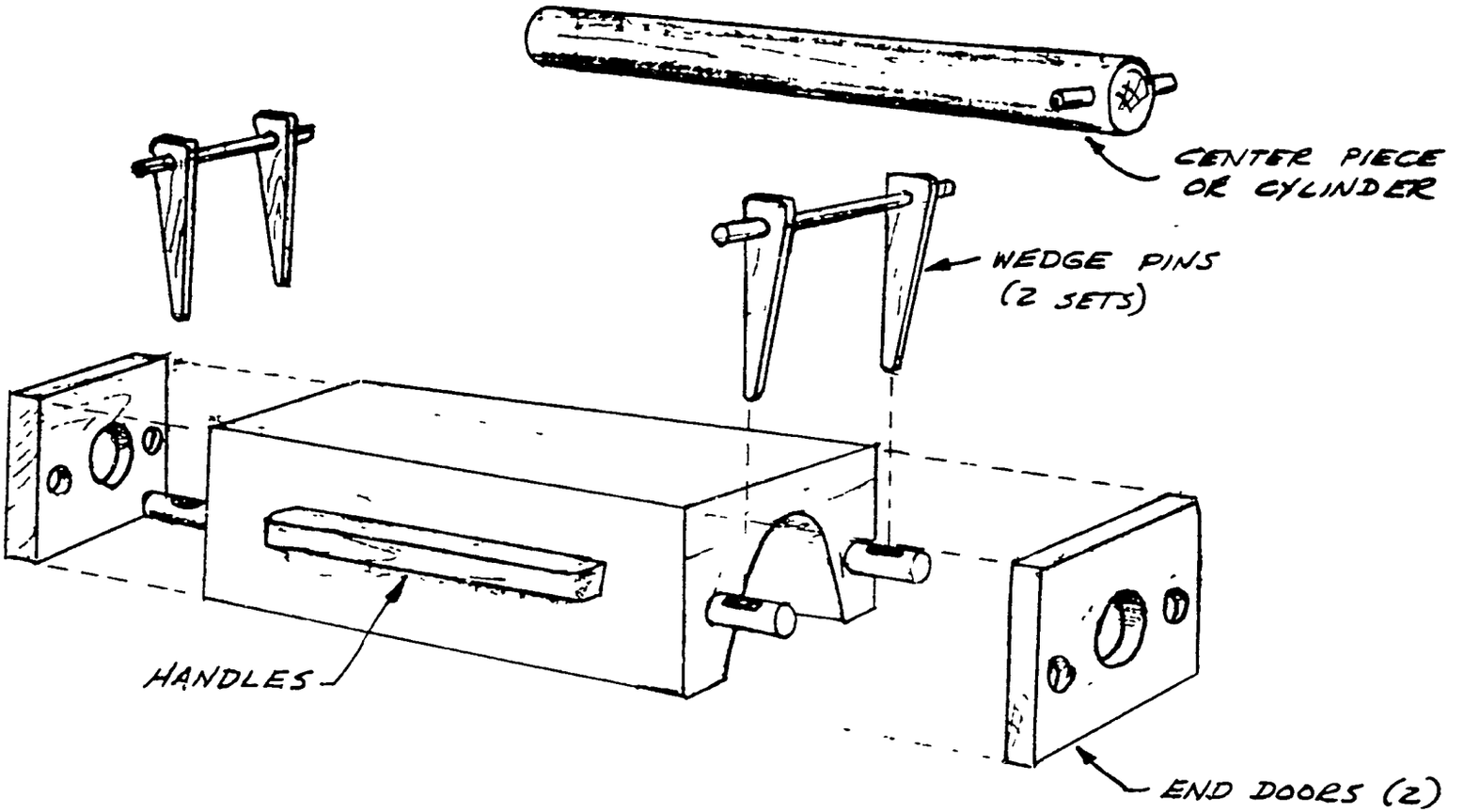

FIGURE 15 ALL-WOOD CEMENT-TILE MACHINE (DIMENSIONS OF TILE SAME AS ALL-METAL MACHINE). BLOCK IS STRONGER IF MADE FROM 3 PIECES JOINED LENGTHWISE.

13 in the tube, No. 14, which will become the pivot (after No. 14 is welded to the inside angle of No. 3). Thus we have the levers which open the end doors.

14. Pipe, 10mm (3/8"), 7.6cm (3") long. Two are needed. They form the pivots for levers.

15. Steel welding rod, 6mm x 10.8cm (1/4" x 4 1/4"). The ends are ground flat and smooth. Two are needed. See Figure 14. These are the hinge pins for the doors.

    After the hinge holes, No. 16 are welded to part No. 3, parts No. 15 are put in place in the holes. Then parts No. 6, the doors, are put in place, checked for exact position and bronze welded to the hinge pins, No. 15. This weld extends almost the entire distance between one pivot hole (part No. 16) and the other. The weld holds the door to the hinge pin and prevents the hinge pin from sliding out of place.

16. Steel bar, 19mm x 2.5cm x 6mm (3/4" x 1" x 1/4"). See Figure 13. Four are needed. Bore 6mm (1/4") hole for the hinge rod as shown. No. 15 pivots in these holes to make hinges for the doors. Parts No. 16 are welded to part No. 3 in such position as to be as far to the outside edge of the door as possible. It is best to make a trial positioning of the door and parts No. 15 and 16 by tack welding No. 16 lightly before welding it permanently. Then it is possible to make sure that the door is going to be in such place that the pipe will have its proper position.

17. Common nails, 6 penny, with strong heads. See Figure 14. Four are needed. Connect the nail to the spring by a wire through the hole in No. 8. Put the wire through the holes before forming the second end loop.

18. Piston, 5cm (2") galvanized pipe, 40.6cm (16") long. (The 5cm (2") measurement is the inside diameter of the pipe.) Weld one end shut by bronze welding a metal disc to the end. Then dress lightly in the lathe, making the closed end 0.5mm (1/64") smaller than the other. It will serve well without turning, but will be easier to operate it dressed.

19. Wire or welding rod, 2mm (3/32") to make the connection between parts No. 9 and 17. See Figures 2 and 14.

Source:

A Machine for Making Concrete Tile for Irrigation and Drainage, by J. Oscar Brown, U.S. Department of Commerce, O.T.S. Information Kit, Vol. 2, No. 2, (November 1961).

MAKING CONCRETE TILE

Using the detailed directions presented here for using the "Concrete Tile Machine," it is possible for one man to make two tiles per minute, although a good day's work would be 300 or more. The mortar remains in the form only a few seconds. The cement mixture is tamped into the form with a tamper. Then the form is immediately turned up-side-down on a (slightly oiled) concrete floor and emptied, leaving the tile completed and ready to start its curing process. The same general method can be adapted for the wooden tile-making machine in Figure 15 of the preceding entry.

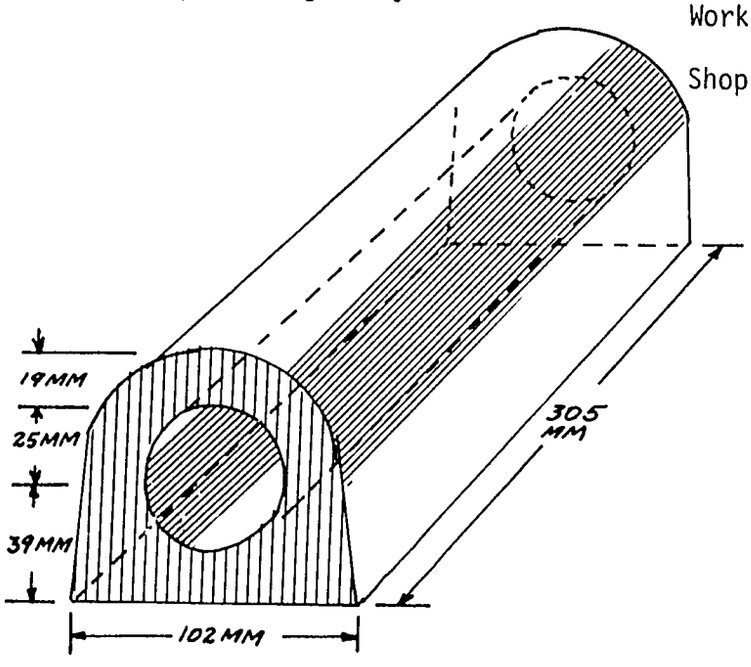

FIGURE 1 THE FINISHED TILE

Tools and Materials

Fresh Portland Cement

Clean sand, screened through a 6mm (1/4") screen

Clean water

All-metal tile machine

Metal tamper

Plastering trowel'

Work bench

Shop with concrete floor

One (11-liter) bucket

D-handled shovel (square point)

Large hoe for mixing cement

A strong dust pan with a handle.

Steps in making tile	Important suggestions
1. Screen the sand and spread out 28 liters (1 cubic foot) on the shop floor.	1. Use 28 liter (1 cubic foot) measuring box without a bottom.
2. Spread 7 liters (1/4 cubic foot) cement over the sand.	2. Measure in the box, filling it 1/4 full.
3. Mix thoroughly with shovel and hoe.	3. Turn over the pile four to six times.
4. Spread the pile out and scatter the mixing water over it.	4. The amount of water will be no more than 2/3 the volume of cement, including any water in the damp sand. The mix should be as dry as possible and still be plastic.
5. Make the batch into tile before 45 minutes of time elapses. Put mortar on work bench after mixing.	5. Cement loses its strength if put into the form too long after mixing.
6. Fill the form (without the pipe) 1/4 full and tamp the ends with two strokes with the (gloved) left hand.	6. This gives the tile perfect ends.
7. Insert the pipe and fill the form with mortar.	7. One dip with a strong dust pan without a handle.
8. Tamp the sides of the tile.	8. Three strokes with the iron tamper.
9. Fill the form again.	9. Another dip with dust pan.
10. Turn the tamper over and pack the cement again.	10. Three strokes with the flat surface of the tamper.
11. Use the trowel to finish the tile.	11. Strike off the surplus with one stroke and leave the surface trowelled level with a second stroke.
12. Carry the tile and form to a place where the floor has been lightly oiled.	12. In carrying the form, do not touch the pipe.
13. Place the form carefully on its side on the floor and then tip it quickly to an upside down position.	13. Hesitation in the middle of the tipping action may cause the mortar to fall out.
14. Pull out the pipe, turning it slightly first. Hold the form down with the left hand.	14. If the pipe is too hard to remove, it may have irregularities and need to be dressed lightly in the lathe.

15. Lay the pipe on top of the form.	15. This gives the form a slight jar.
16. Gripping the sides of the form with both hands, push down on the levers which open the hinged ends and then lift the form off the tile.	16. In lifting use leg action and hip action. Bending the elbows may knock an end off the tile.
17. Leave the tile in its place on the floor over night.	17. Sprinkle very lightly with water if it begins to get dry. To dry at this stage would ruin it.
18. The next day the tile can be picked up by gripping it at its middle with the hand. Stack the tile at the side of the shop to clear the center floor space for another day of production.	18. The first day, stack only two layers high, as the tile is not strong yet. The second day, they can be stacked as high as desired.
19. When tiles are one day old, it is a good time to make 45-degree ends on such tile as have been injured in manufacture.	19. One needs about 5% (or more) of the tile made with a 45-degree end for use in turning corners in the tile line.
20. Keep the tile wet at least a week.	20. The strength is increased by each day that the tiles are kept wet.

21. If you need further instruction in regard to the fundamental principles of good concrete construction, study the entries on concrete. The machine used in the tile-making operation outlined above can be manufactured in a good modern farm shop, if the mechanic has the entry "Concrete Tile Machine."

Source:

A Machine for Making Concrete Tile for Irrigation and Drainage, by J. Oscar Brown, U.S. Department of Commerce, U.I.S. Information Kit, Vol. 2, No. 2 (November 1961).

Seeds and Weeds

SEED CLEANER

This seed cleaner was developed in Afghanistan to remove round seeds of weeds from wheat grains. The round seeds could not be separated by a sieve because they were the same size as the wheat grains. The cleaner described here takes advantage of the round shape of the weed seeds to separate them from the wheat. The wheat grains, which roll down the chute slowly, collect at the base of the inclined platform ("x" in Figure 1); while the round seeds roll faster and fall off the side opposite the chute ("y" in Figure 1).

Tools and Materials:

Hammer
Saw
Nails or screws

Inclined Platform ---

Galvanized iron sheet: 70cm x 70cm (2'3" x 2'3")

Wood: 2cm x 4cm x 68cm (4 pieces) (3/4" x 1 1/2" x 2'2 3/4")

Wood: 2cm x 4cm x 25cm (1 piece) (3/4" x 1 1/2" x 10")

Attached to platform to support chute

Wood: 2cm x 8cm x 34cm (2 pieces) (3/4" x 3" x 1'3 1/2")

Legs for platform

Chute

Galvanized iron sheet: 24cm x 140cm (9 1/2" x 4'7")

Wood: 2cm x 8cm x 80cm (1 piece) (3/4" x 3" x 2'7")

Wood: 2cm x 8cm x 80cm (1 piece) (3/4" x 3" x 12")

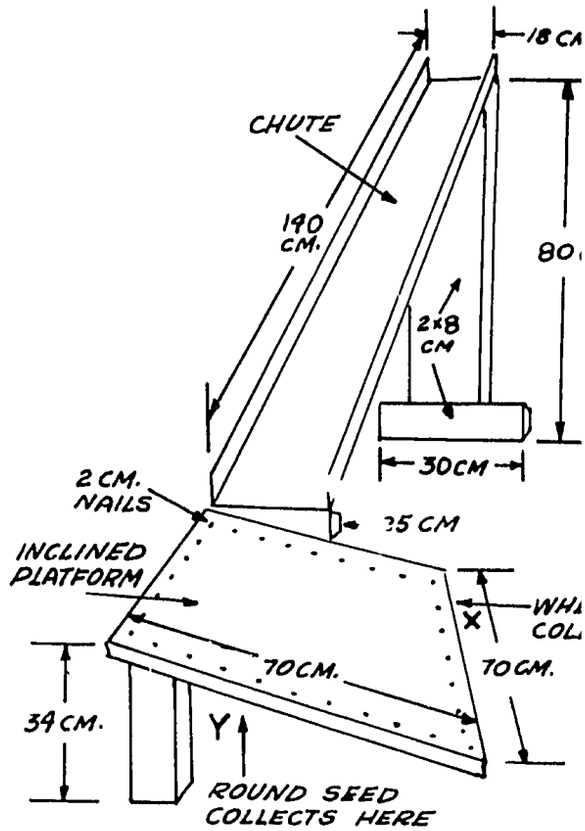

FIGURE 1.

Make the chute and the inclined pla form as shown in Figure 1.

The chute is attached at the top to the 80cm (2'7") support by nails whose heads have been removed. This makes i easy to remove the chute when it is nc being used. The chute's lower end sit on the 2cm x 4cm x 25cm (3/4" x 1 1/2' x 10") support attached to the platfo

The seed should first be cleaned wit sieves to remove as much dirt and chaf as possible. To use the seed cleaner, drop the seed very slowly onto the top of the chute.

Source: Dale Fritz, VITA Volunteer, Washington,D.C.

SEED CLEANING SIEVES

An important step for improving crop production is the effective cleaning of crop seeds. The sieves described here have been found effective in many countries.

Tools and Materials

Wood: 12 pieces: 2.5cm x 5cm x 46cm (1" x 2" x 18")

Wood strips: 12: 1cm x 2.5cm x 43.5cm (1/2" x 1" x 17")

Galvanized screen:

6mm (1/4") mesh: 46cm (18") square

5mm (3/16") mesh: 46cm (18") square

3mm (1/8") mesh: 46cm (18") square

Hammer

Saw

Nails

For construction details, see Figure 1.

The exact size of these sieves is not important, but 3mm (1/8"), 5mm (3/16") and 6mm (1/4") mesh make convenient sizes for cleaning wheat, barley, corn and seeds of similar size. The sieves are also useful for grading certain seeds. Grading consists of removing the small, weak seeds which will produce small weak plants or will not grow at all. Less seed can be planted per acre, if it is properly cleaned and graded, and still produce a good crop.

Source:

Dale Fritz, VITA Volunteer, Washington, D.C.

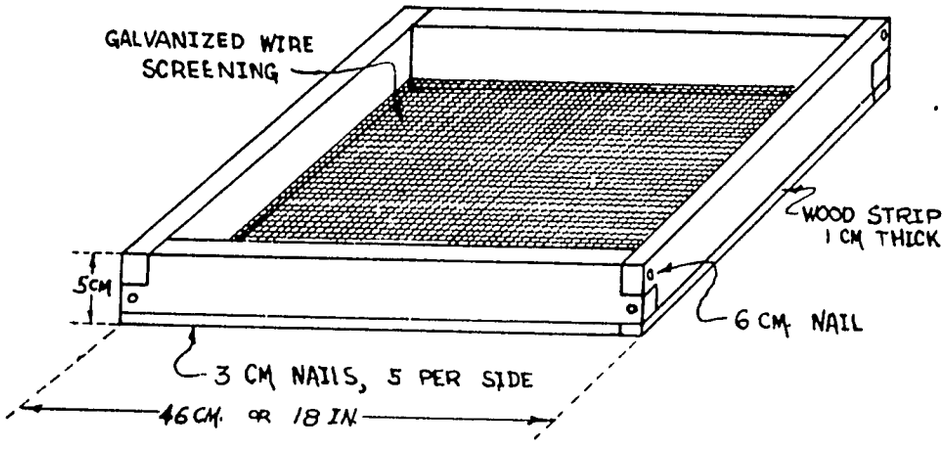

FIGURE 1

DRYING GRAIN WITH WOODEN BLOCKS

Small blocks of wood treated with calcium chloride, a low-cost chemical, can be used to dry grain. The blocks, which absorb moisture from the grain, can be used repeatedly by drying them in an oven after use. The blocks can absorb water up to one-fourth their weight.

In a test using balsa blocks, the moisture content of grain dropped from 17 percent to 12 percent in three days. The blocks were not dried at this point; in the next five days, moisture content did not change. The blocks were then dried in an oven and put back in with the grain. Three more days of drying brought the moisture content down to 10 percent, at which grain resists mold and insects.

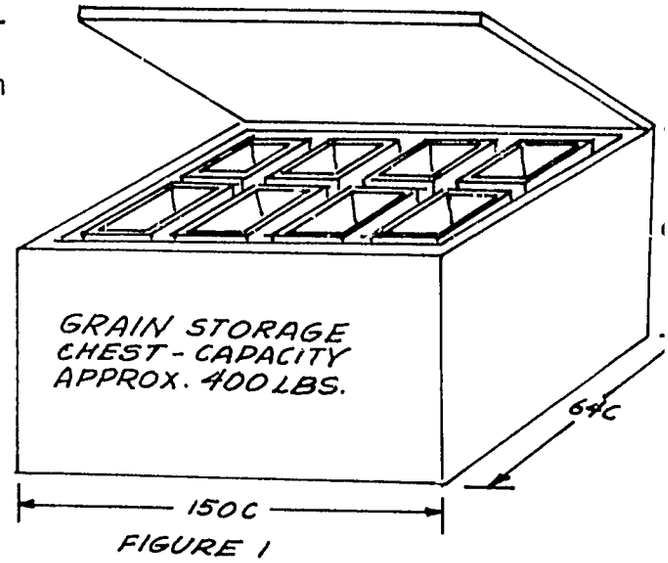

FIGURE 1

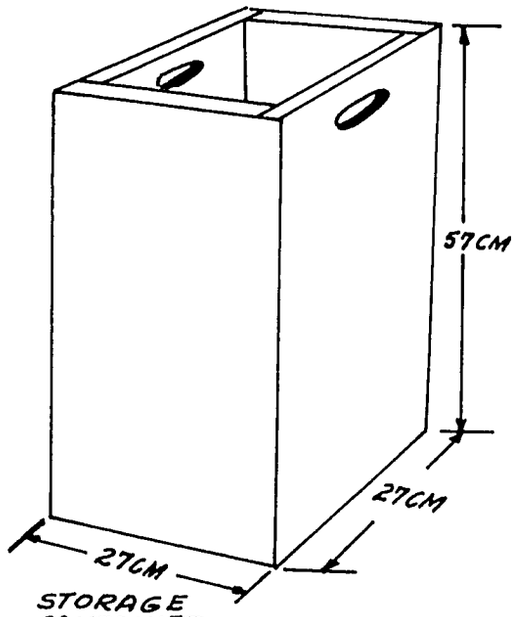

STORAGE
CONTAINER
CAP: 35 LITERS - 50LBS.
FIGURE 2

Tools and Materials

Balsa or cedar: Cedar absorbs water anc is durable. Balsa absorbs more water, but it breaks easily. Other woods can also be used.

Calcium chloride ($CaCl_2$): Add enough to a liter of water to make the solution weigh 1.2kg (or to a quart of water to make the solution weigh 2.5 pounds).

Waterproof chest which will keep out vapor, to dry and store the grain. A steel drum or sheet metal cabinet woul be good. A wooden chest can be used if it is vapor-proof, as in Figures 1, 2 and 3.

Saw

Coarse Screen: 2.5cm (1") mesh

Preparing the Blocks

1. Cut the wooden blocks so that as much as possible of the surface is end grain. A good size is 3cm x 3cm x 0.75cm (1" x 1" x 1/2").

FIGURE 3

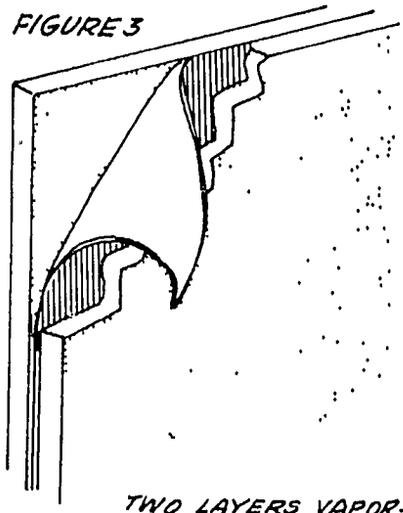

TWO LAYERS VAPOR-BARRIER - IMPREGNATED BUILDING PAPER

2. Dry the blocks in a 90 to 100C. (194 to 212F.) oven or double boiler to remove all moisture (see Figures 4 and 5).

3. Cook the blocks in the calcium chloride solution for four hours at a temperature just below the boiling point, 100C. (212F.)

4. Let the solution cool; let the blocks soak in the solution for hours.

5. Dry the blocks again as in Step 2.

6. When the blocks are dry, wipe off any calcium chloride on their surface before putting them in the grain.

7. Mix the blocks with grain in a container. The blocks should be spaced throughout the container so that the grain will dry evenly in the shortest time possible. The blocks should not take up more than 10 percent of the container's space. Small containers (see Figure 1) are helpful when there are several kinds of grain to dry. They also make it easier to remove and replace the blocks. These containers are placed in the waterproof chest.

8. After three to five days, remove the blocks. They can be separated from the grain easily with a coarse screen. Dry the blocks as in Step 2.

9. Continue re-drying the blocks and placing them back in the grain until the blocks no longer absorb moisture. To find out when this point is reached, weigh the blocks after three or four days in the grain: if they weigh the same as dry blocks, the grain is dry.

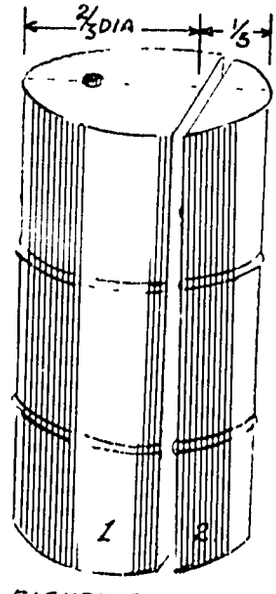

FIGURE 4 INVERT SECTION 2 IN SECTION 1. ATTACH CUT EDGES TOGETHER CUT HOLE FOR STEAM ESCAPE.

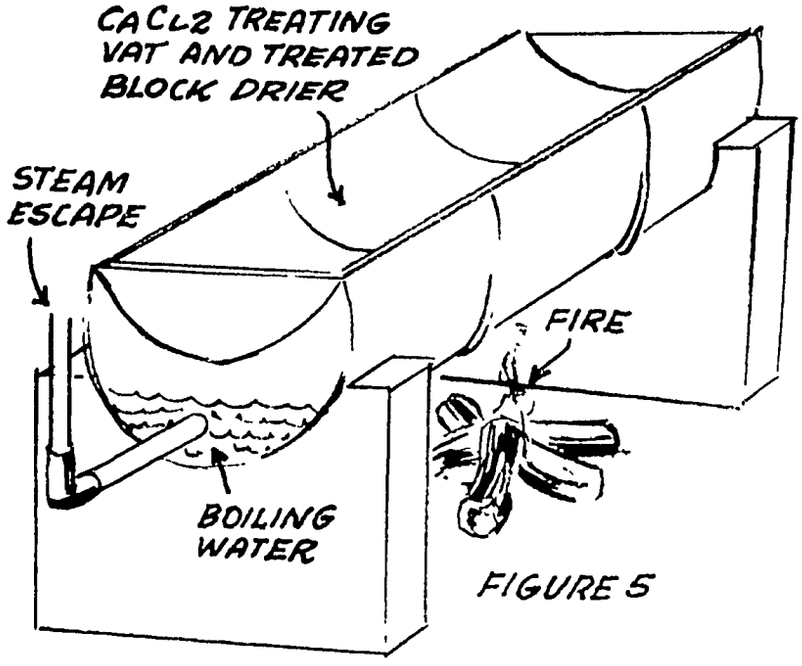

FIGURE 5

Source:

Grain Drying and Storage for Warm, Humid Climates by Norton C. Ives (Turrialba, Costa Rica: Inter-American Institute of Agricultural Sciences, 1951).

BUCKET SPRAYER

The bucket sprayer described here has been designed primarily to meet the need for a sprayer which can be built in an area where production facilities are limited. This sprayer, which can be made by the local artisans, is intended only for water solutions of insecticides or fungicides.

The sprayer has been found useful in Afghanistan.

Two people operate it: one sprays while the other pumps.

Tools and Materials

Galvanized iron 30cm x 30cm (1' x 1') plus 10cm x 20cm (4" x 8")

Barrel metal 10cm x 20cm (4" x 8")

6mm (1/4") hose (high pressure) 4m (13')

6mm (1/4") pipe (truck brake line may be used) 50cm (19 5/8")

Wood for handle 2cm x 15cm x 30cm (3/4" x 6" x 12")

2.5cm (1") Galvanized iron pipe (thin-walled) 120cm (4') long

4mm (5/32") wire: 20cm (8")

Truck inner-tube material: 10cm x 20cm (4" x 8")

1mm (1/32") Galvanized wire: 30cm (12")

4 - 5mm (3/16") bolts, 1cm (3/8") long

2 - 5mm (3/16") bolts, 3.5cm (13/8") long

The sprayer pump operates on the same principle as the Inertia Pump (see page 97). The top of the 2.5cm (1") iron pipe is plugged and a simple valve is located 8cm (3 1/8") from the top. The valve is a piece of truck inner-tube rubber wrapped around the pipe and held in place by wire. One corner of the rubber is over a hole in the pipe. Some careful adjustment is necessary when placing the rubber to make sure it works properly and does not leak.

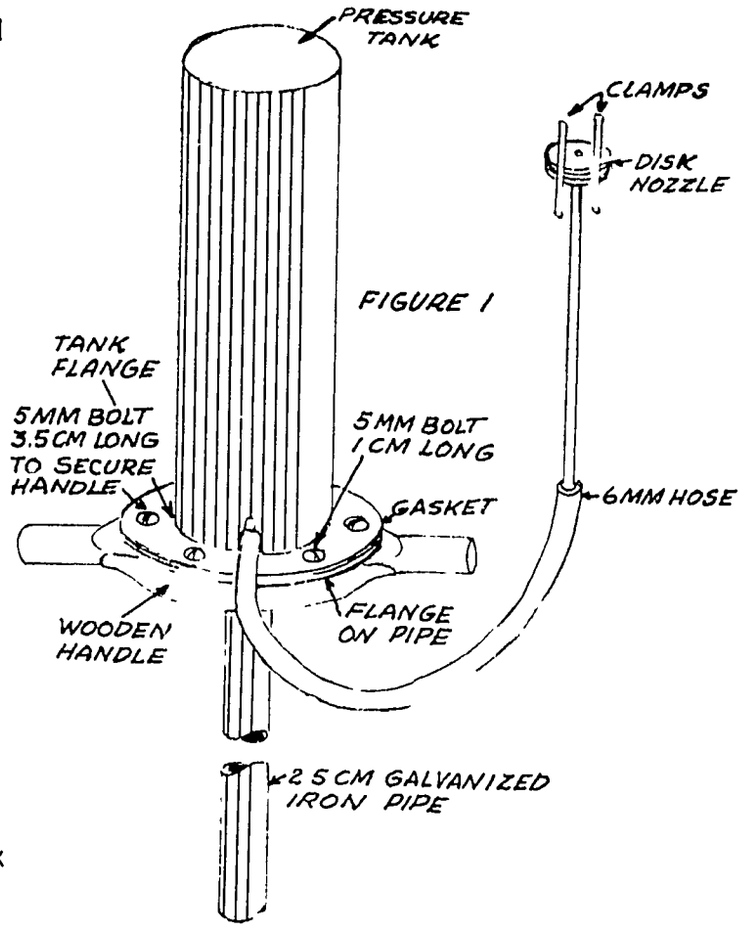

The pressure tank encloses the valve assembly and, as the liquid is pumped into the tank, builds up pressure sufficient to operate the simple disk type spray nozzle. The tank is built so that it can be removed in order to service the valve.

The length of the hose can be determined by the maker of the sprayer but it should be about 4m (13') to allow the man doing the spraying to cover quite a large area before having to move the bucket. Also, the length of the small pipe and the angle of the spray nozzle

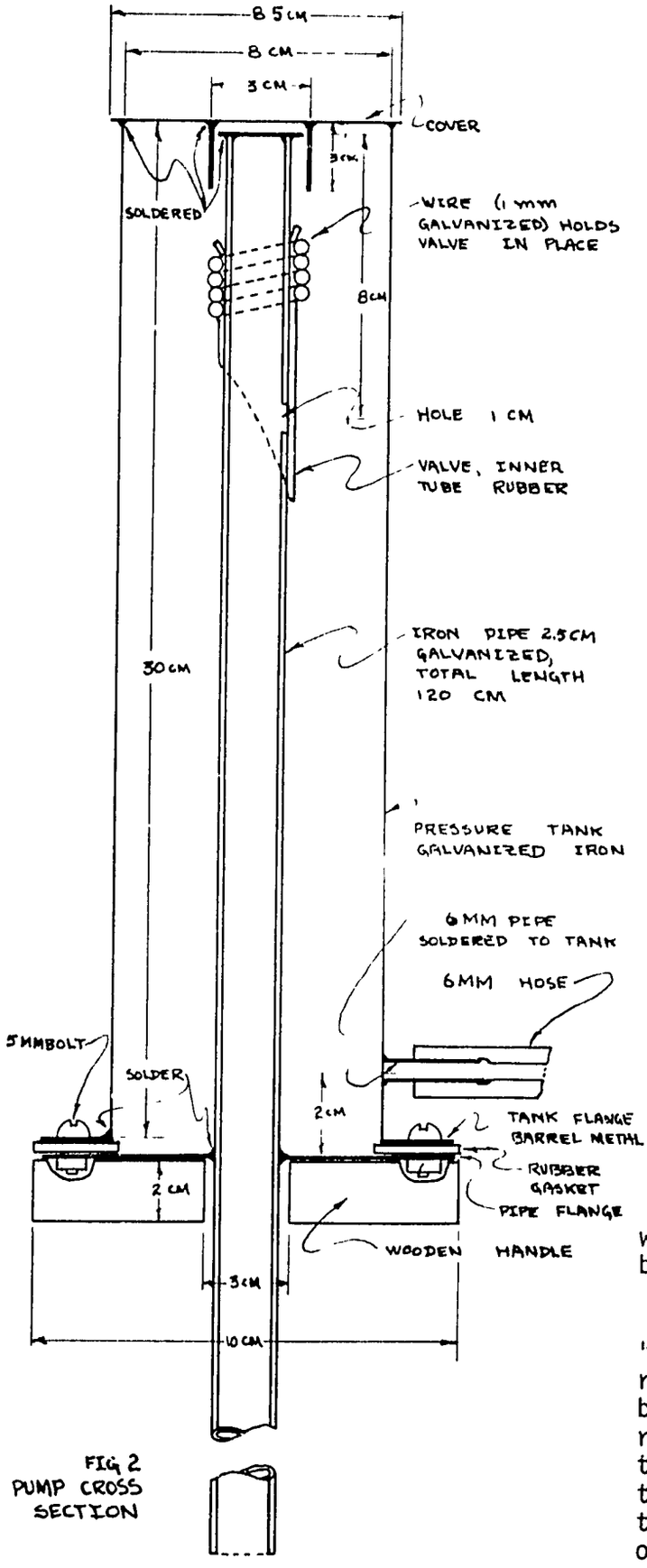

FIG 2
PUMP CROSS SECTION

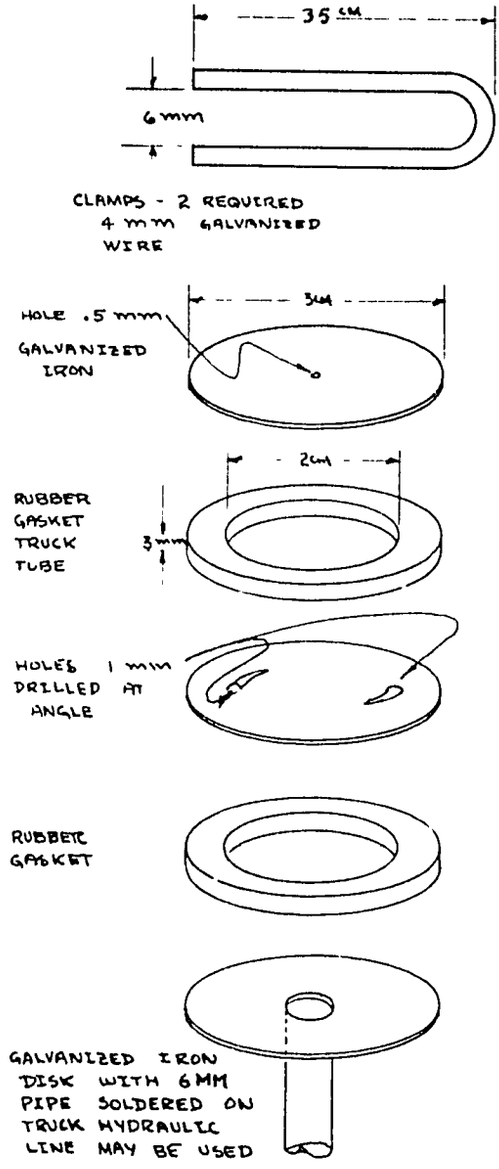

FIG 3
DISK NOZZLE

will be determined by the kind of crops being sprayed.

At times it will be necessary to "prime" the sprayer pump: if the valve rubber is too tight and the air cannot be forced through the valve, or if the rubber is stuck to the pipe. To prime the pump turn it up-side-down and fill the pipe with water. Holding your thumb over the pipe, turn the pump over, lower it into the bucket of liquid and start pumping in the usual man-

ner. If priming does not start the pump it will then be necessary to remove the pressure tank to inspect and repair the valve.

Only very clean water should be used to make the mixture for spraying. It should be strained through a cloth after mixing to remove any particles which might cause the nozzle to plug. If a very fine brass screen is available, it should be put in the nozzle to keep the dirt from plugging the holes.

Source:

Dale Fritz, VITA Volunteer, Washington, D.C.

BACKPACK CROP DUSTER

The backpack duster described here, designed so that it can be easily made by tinsmiths, has been used by Afghan farmers to dust sulfur on their grapes to control powdery mildew. The duster is made from easily available materials. Its feed rate is adjustable (see Figure 1).

The springs needed for the duster can be made with the simple spring winder shown in the following entry.

Tools and Materials

Soldering equipment

Sheet-metal working tools

Carpentry tools

How the Duster Operates

In operating the duster, the rod (23) is used to pump the inner-tube bellows, which pivots about point A (see Figure 1).

Air is admitted to the bellows through valve (4), also made of innertube rubber, and passes down the pipe (18). A measured amount of dust is injected into pipe (18) at point B. The feed mechanism consists of a 6mm (1/4") rod (7) covered by a spring (17). As the bellows is worked up and down, the rod and spring go in and out of the hole (at point B) in the delivery pipe (18). The dust lodges between the loops of the spring and is carried into the pipe. The amount of dust delivered is controlled by stretching the spring on the rod so that there is more space between the loops. The greater the space between the loops, the greater the amount of dust carried into the pipe. An easily adjustable clamp (13) and (14) is provided on the rod to regulate the amount of dust applied to the plants. The air-dust mixture is blown out the delivery pipe at (24).

The bellows of the duster is made from truck inner-tube rubber. There are several sizes of inner tubes. If the size shown in the list of parts is not used, the diameter of the hopper must be adjusted to the size of the tubes available. The hopper is made from galvanized tin, from 24 to 28 gage.

In the illustrations, the feeder rod (7) is shown as being straight. However, it is necessary to bend the rod to allow it to work in and out of the hole in the delivery pipe without binding.

To fill the duster, slip the bellows off of the top of the hopper. The hopper must not be filled above the top of the delivery pipe. The top of the delivery pipe (18) is cut so as to prevent dust from spilling in the tube during filling, and to provide a means for fastening it to the hopper (19).

Adjusting the Duster

To increase the amount of dust being applied:

1. Slip the bellows (8) off of the top of the hopper (19).
2. Loosen the bolt (13).
3. Pull up on the clamp (14) stretching the spring (17).
4. Tighten the bolt (13).
5. Replace the bellows and test the amount of dust delivered to see if it is satisfactory.

To decrease the amount of dust, the procedure is the same except that the clamp is pushed down on the rod.

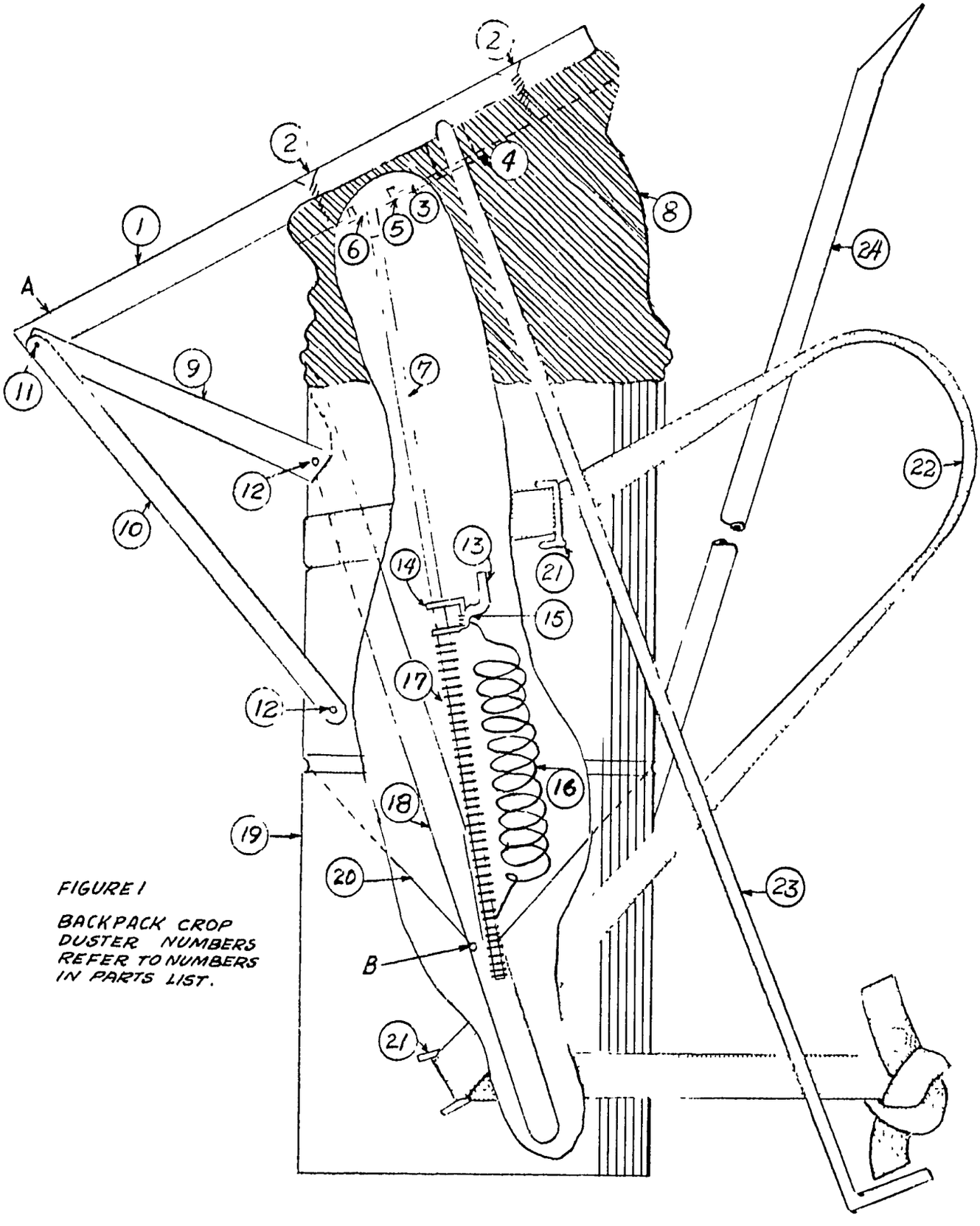

FIGURE 1

BACKPACK CROP DUSTER NUMBERS REFER TO NUMBERS IN PARTS LIST.

Part No.	Name	Material	Description
1	Bellows Support	Wood	38cm x 7cm x 2cm (15" x 2 3/4" x 3/4").
2	Screws		4cm (1 9/16") long.
3	Bellows Plug	Wood	22cm (8 5/8") in diameter, 2.5cm (1") thick.
4	Valve	Rubber	4cm x 5cm (1 9/16" x 2") see Figure 2.
5	Screws		2cm (3/4") long.
6	Feeder Rod Anchor	Barrel Metal	See Figure 3.
7	Feeder Rod	6mm (1/4") rod	See Figure 3. Total length 50cm (19 3/4").
8	Bellows	Truck inner-tube rubber	30cm (12") long on long side. Tube measures 29cm (11 3/8") from edge when laid flat.
9	Bellows Support	Barrel metal	20cm (8") long. See Figure 4.
10	Brace	Galvanized tin	33cm (13") long. See Figure 4.
11	Nails		3cm (1 3/16") long.
12	Rivets		
13	Bolt	6mm (1/4") rod	See Figure 5.
14	Clamp	Barrel metal	See Figure 5.
15	Nut	6mm (1/4") nut	See Figure 5.
16	Agitator Spring	Tire bead wire	3.5cm (1 3/4") diameter. See Figure 6.
17	Feeder Spring	Tire bead wire	9mm (11/32") diameter. See Figure 3.
18	Pipe	Galvanized tin	3.5cm (1 3/4") diameter, 71cm (28") long. See Figures 6 and 7.
19	Hopper	Galvanized tin	22cm (8 5/8") diameter, 48cm (18 7/8") high. See Figure 7.
20	Floor	Galvanized tin	Make to fit. See Figure 7.

21	Strap Holder	Galvanized wire	4mm (5/32") diameter. Soldered to hopper.
22	Strap	Webbing	6cm (2 3/8") wide, 3m (9'10") long. Tied at waist.
23	Handle	8mm (5/16") rod	Total length 1 meter (39 3/8").
24	Pipe	Galvanized tin	3.5cm (1 3/4") diameter, 140cm (55 1/4") long. See Figures 1, 6 and 8.

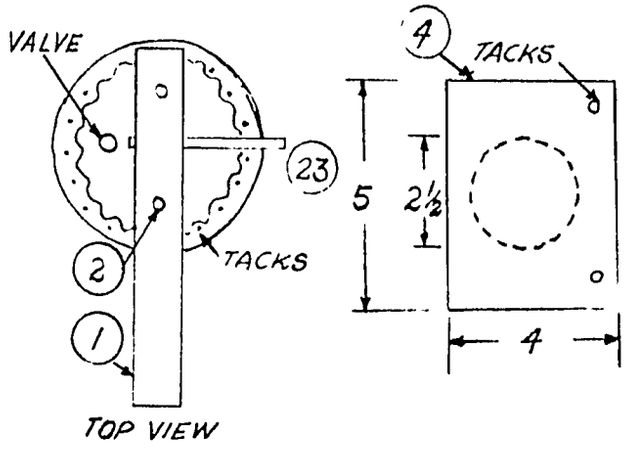

FIGURE 2 DETAIL OF PART 4, VALVE

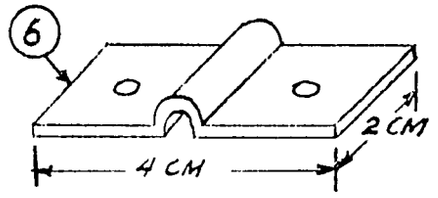

FIGURE 3 DETAIL OF PART 6, FEEDER ROD ANCHOR, AND PART 7, FEEDER ROD

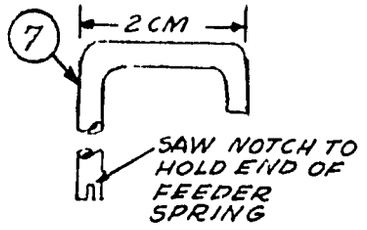

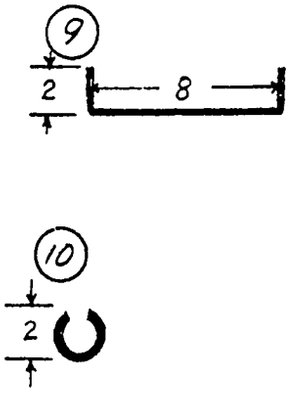

FIGURE 4 CROSS-SECTION OF PART 9, BELLOWS, AND PART 10, BRACE

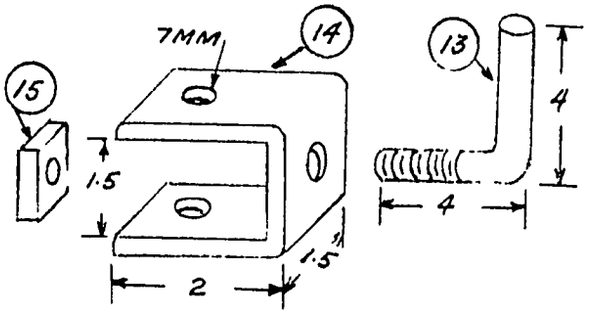

FIGURE 5 DETAIL OF PART 13, BOLT, PART 14, CLAMP AND PART 15, NUT.

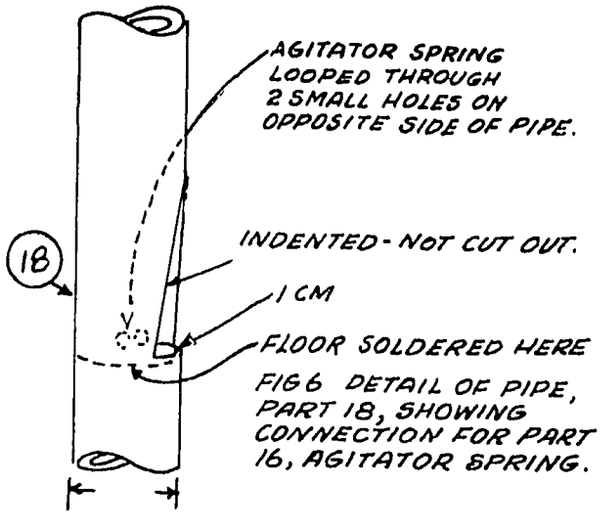

FIG 6 DETAIL OF PIPE, PART 18, SHOWING CONNECTION FOR PART 16, AGITATOR SPRING.

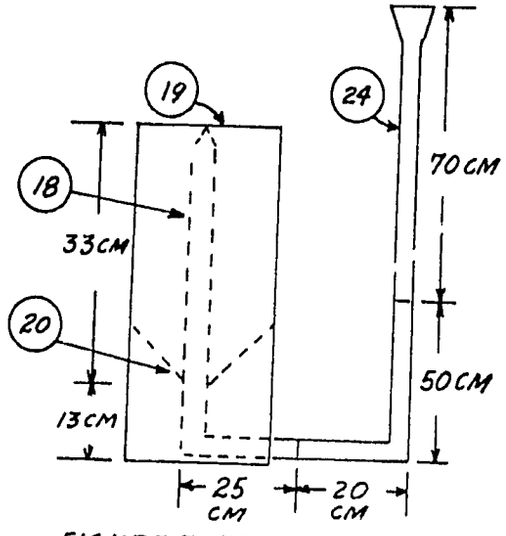

FIGURE 7, DETAIL OF PART 19 HOPPER AND PART 24, PIPE BROKEN LINES SHOW PART 18, PIPE, AND PART 20, FLOOR

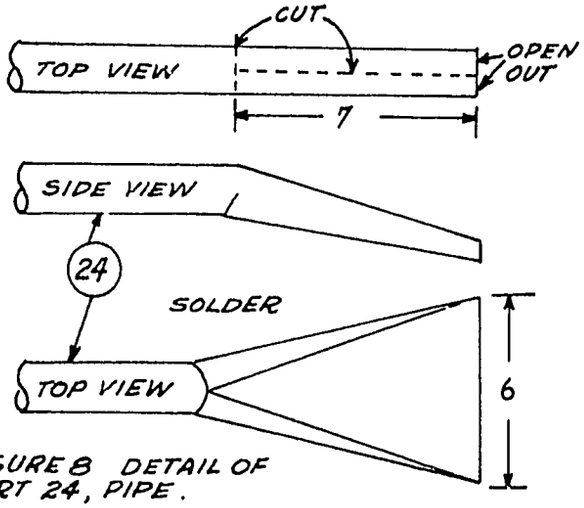

FIGURE 8 DETAIL OF PART 24, PIPE.

Filling the Duster

Before filling the duster, make sure that all lumps of dust have been broken up. Putting the dust through a piece of window screen is a good way to break up the lumps. This will also remove any foreign matter.

Source:

Dale Fritz, VITA Volunteer,
Washington, D.C.

SPRING WINDER

This method for winding springs can be used to make springs of any size. Figures 1 and 2 show spring winders for springs which will be the right size for use in the Backpack Crop Duster described in the preceding entry.

Tools and Materials

Drill

Drill bit: 2mm (1/12")

Drill bit: 6mm (1/4")

Drill bit: 12.5mm (1/2")

Wood: 10cm x 10cm x 1m (4" x 4" x 39")

Metal rod: 6mm (1/4") by 1m (39") long

Metal pipe: 12.5mm (1/2") by 30cm (12") long

4 small nails

Steel spring wire

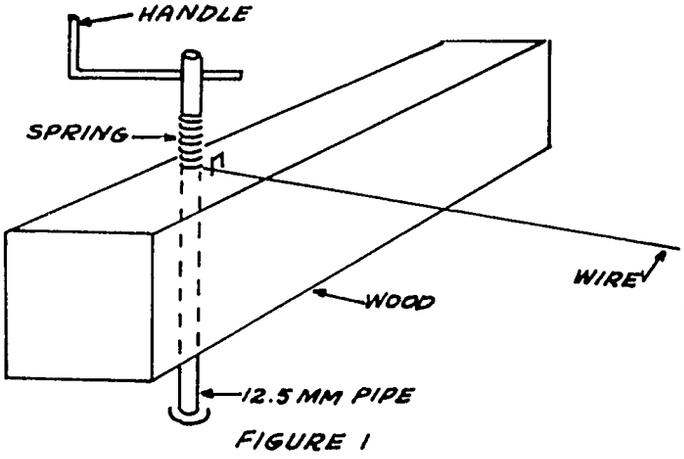

FIGURE 1

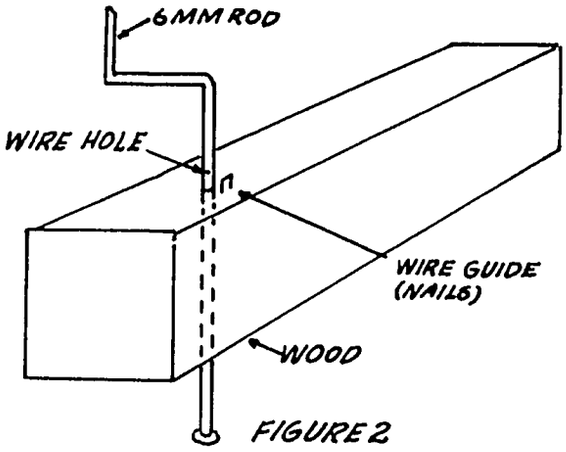

FIGURE 2

Spring Wire

A good source of spring wire is from the bead of an old tire. The rubber should not be burned off as this destroys the spring-strength of the wire.

Making the Winders

A 6mm (1/4") hole is drilled in one end of the wood block and a 2mm (1/12") hole is drilled in the other end. A 12.5mm (1/2") hole is drilled through the 6mm (1/4") rod and through the 12.5mm (1/2") pipe to insert the end of the wire. A 6mm (1/4") hole is drilled through the 12.5mm (1/2") pipe to hold the winding handle. Drive two nails close together, about 1.5mm to 2mm (1/12" to 1/16") from each hole in the wood block. Put the pieces together as shown in Figures 1 and 2.

The wire is fed through the nail wire guide and then through the 1/12 inch hole in the rod or pipe spool. The spool is then turned in a clockwise direction until the desired length of spring is wound. The springs for the backpack duster are 9mm (11/32") from the 6mm (1/4") spool and 3.5cm (1 3/8") from the 2.5cm (1/2") spool.

Source:

Dale Fritz, VITA Volunteer,
Washington, D.C.

Poultry Raising

Brooder with Corral for 200 Chicks

This brooder (see Figure 1) is hinged for easy access to corral and brooder. The brooder has been used successfully in Ecuador and elsewhere to raise broilers for a cash crop.

This chick brooder is heated by a regular electric light bulb, placed under the brooder floor. Depending on the temperature rise required, the wattage of the light bulb will have to be chosen by experimentation. The metal floor and roof prevent predators such as rats from entering the brooder. If electric power

FIGURE 1

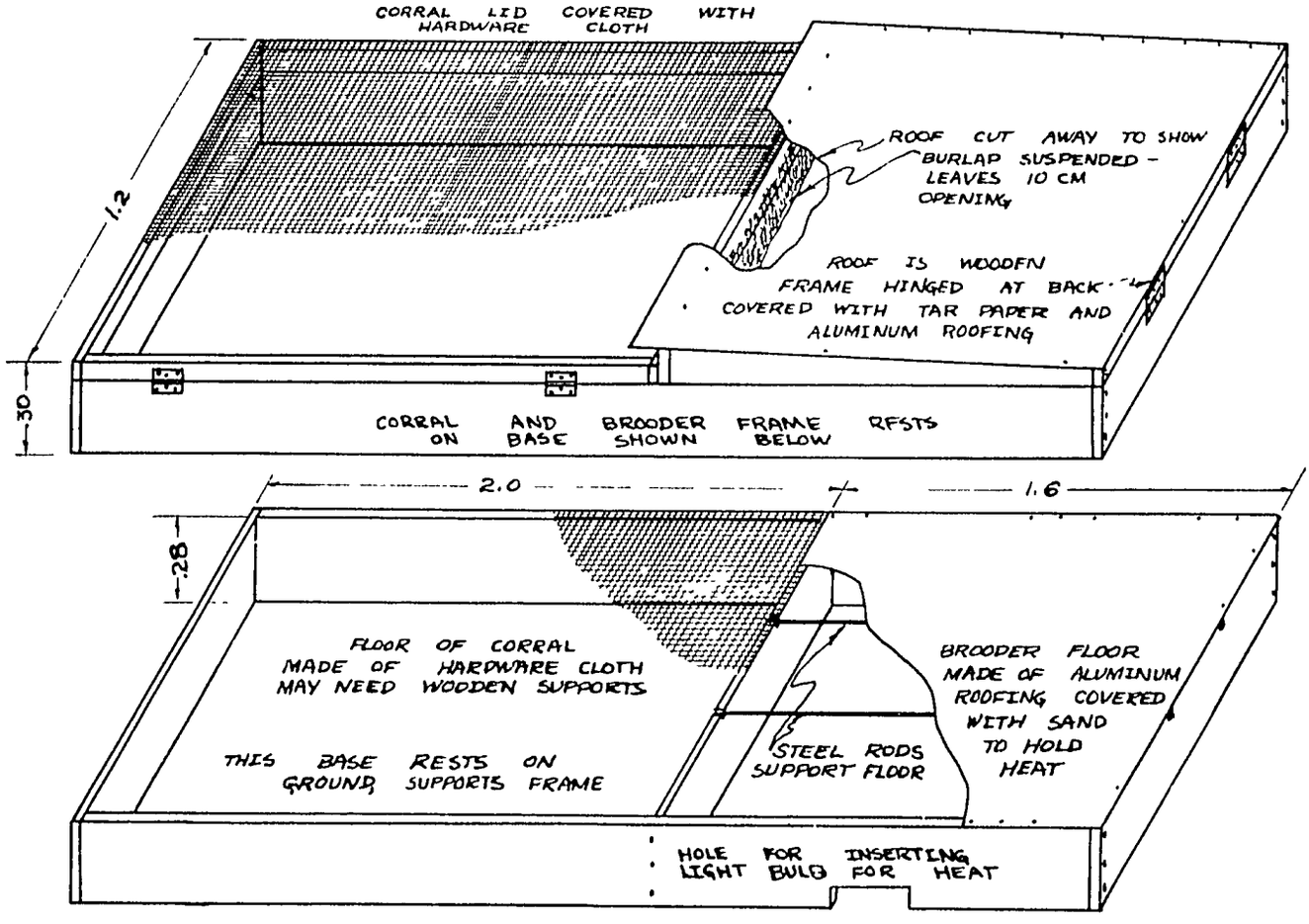

is not available, an excavation can be made for a lantern. Be sure the lantern has adequate ventilation.

Tools and Materials

Small carpentry tools

Hardware cloth 1.2 x 2m (4' x 6' 6 3/4"), 2 pieces this size needed.

Aluminum roofing:

1 piece: 1.2m x 1.6m (4' x 5'3")

1 piece: 1.2m x 1.7m (4' x 5'7")

Wood, approximately 30cm x 2cm x 20m (1' x 3/4" x 65'8")

Steel rod 1cm (3/8") diameter x 3.2m (10' 6")

4 hinges about 8cm (3 1/8") long

Woodscrews for hinges

2 buckets clean dry sand

Nails, tacks, staples

Source:

Article by George Kreps in Rural Missions, Issue #122, published by Agricultural Missions, Inc.

Paraffin (Kerosene) Lamp Brooder for 75 to 100 Chicks

This brooder was used by more than 300 farmers in eastern Nigeria. The earlier design was modified later: several holes were drilled in the legs which were bolted; this made it possible to vary the height of the brooder.

1. Nail legs to side (see Figure 2).

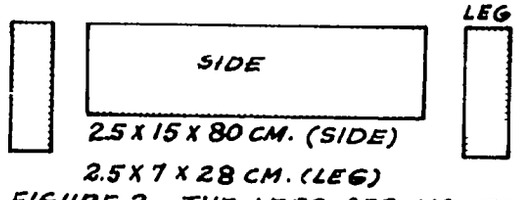

FIGURE 2. THE LEGS ARE NAILED TO THE SIDES.

2. Assemble and nail top support rails 1cm (3/8") below the upper edge of the sides (see Figure 3).

3. Make the top of plywood, sheet metal or wooden boards so that the top fits inside the frame and rests on the support rails (see Figure 4). The hole in the center of the top is for ventilation. A swinging metal cover regulates the size of the opening.

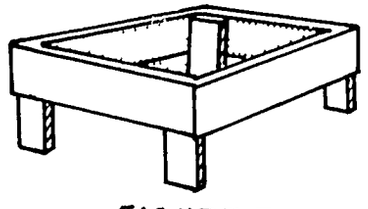
FIGURE 3

4. A bush or hurricane lamp is placed inside wire mesh or a perforated tin can to protect the chicks and to help radiate the heat (see Figure 5).

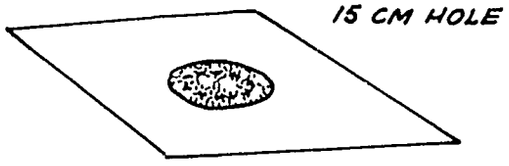

FIGURE 4

The dimensions given in the illustrations can be altered slightly to use available materials.

The wicks of the lanterns should be cleaned daily to cut down on soot.

Source:

W. H. McCluskey, Poultry Science Department, Oregon State University, Corvallis.

Brooder for 300 Chicks

This brooder (see Figure 6) is similar to the other two brooders. It can be used with either lanterns or electric light bulbs. If lanterns are used, their wicks should be cleaned daily. Construction details are given in Figure 7.

Source:

"Brooder for 300 Chicks," by W. W. Stopper, Poultry Advisor, U.S. Technical Cooperation Mission to India, New Delhi (mimeo).

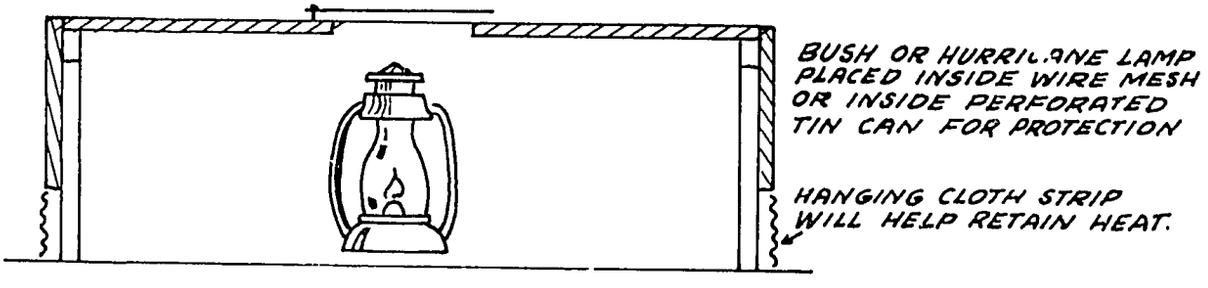

FIGURE 5

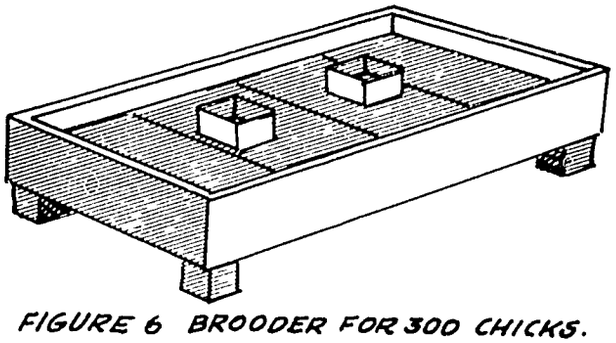

FIGURE 6 BROODER FOR 300 CHICKS.

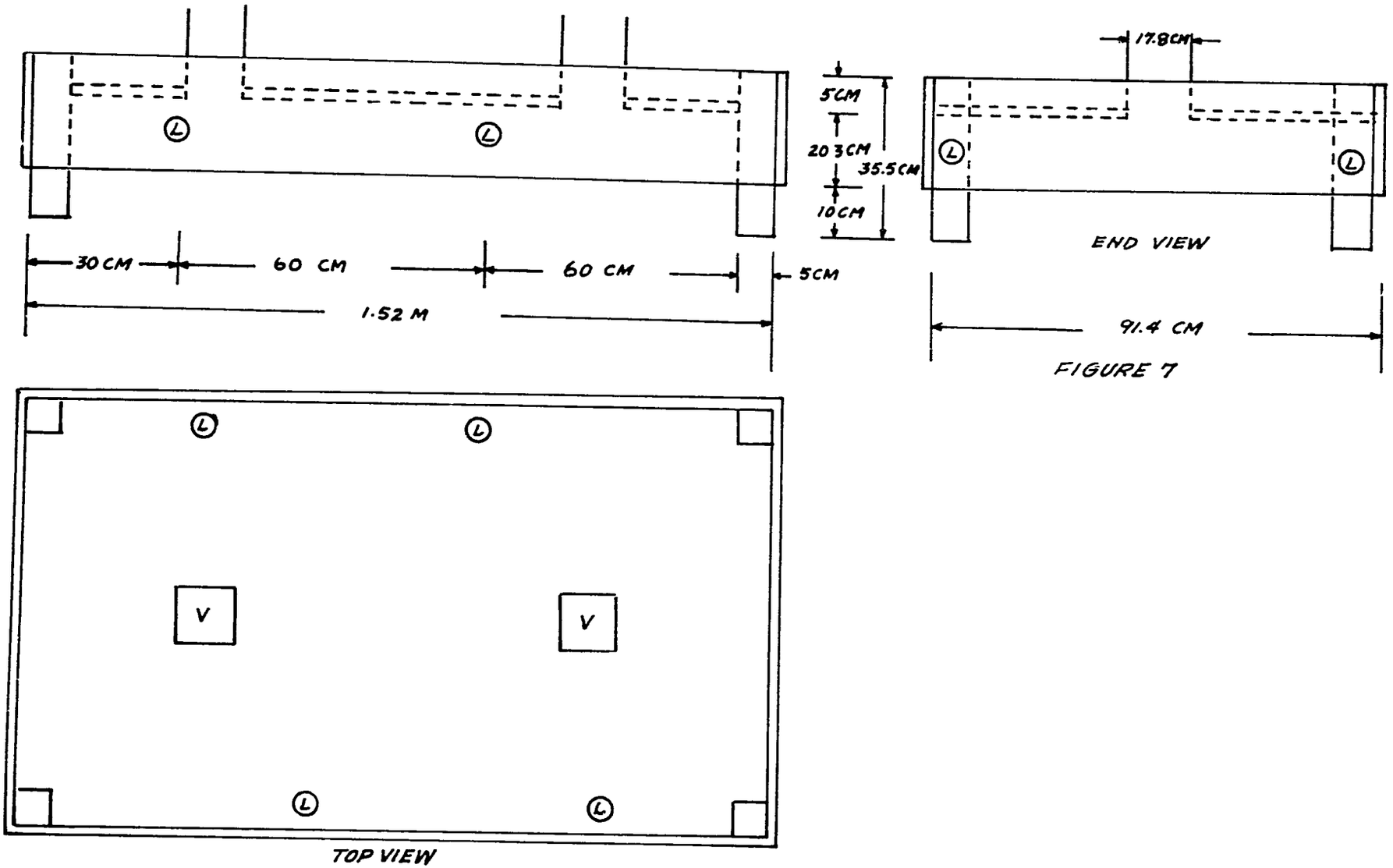
L
L
30 CM
60 CM
60 CM
5CM
1.52 M
5CM
20.3CM
35.5CM
10CM
17.8CM
L
L
END VIEW
91.4 CM
L
L
V
V
L
L
TOP VIEW

FIGURE 7

BAMBOO POULTRY HOUSE

This bamboo poultry house has a thatch roof and slat walls to provide good ventilation. The elevated slat floor keeps chickens clean and healthy while the egg catch and feed troughs simplify maintenance.

The poultry house which costs nothing but labor to build, is certain to produce healthier, more productive chickens. It has been used successfully in the Philippines and Liberia.

Tools and Materials

Bamboo

Nails

Thatching materials

Small tools

House

The house is built on a frame of small poles, with floor poles raised about 1m (3') from the ground. (See section on construction with bamboo, p. 302). The floor poles are covered with large bamboo stalks, split into strips 38mm (1 1/2") wide, spaced 38mm (1 1/2") apart. Floors so constructed have several advantages: better ventilation, no problem of wet moldy litter during rainy season or dry dusty litter during dry season; droppings fall between split reeds to ground away from chickens. This eliminated parasites and diseases normally passed from hen to hen through droppings remaining warm and moist in litter. However, it has been suggested that wide spacing of floor and wall slats might invite marauders such as weasels and snakes.

Tin shields on the support poles will keep rats and other pests from climbing (see Figure 2).

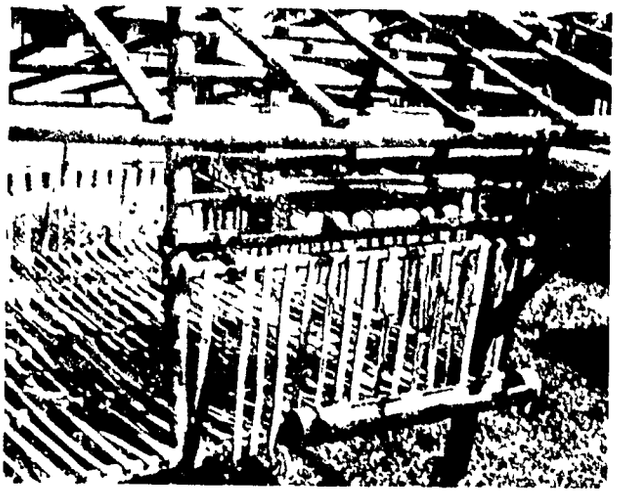

FIGURE 1. EGG CATCH AND FEED TROUGH IN BAMBOO POULTRY HOUSE.

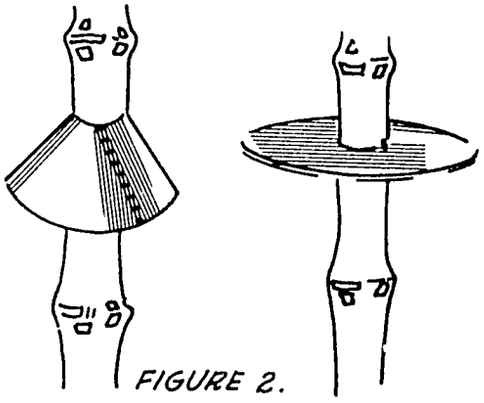

FIGURE 2.

Walls are made from vertical strips of bamboo 38mm (1 1/2") wide, spaced 6cm to 8cm (2 1/2" to 3") apart. This also allows ample ventilation, needed to furnish oxygen to the chickens and to allow evaporation of excess moisture produced in the droppings. In the tropics the problem is to keep chickens cool, not warm. Using a closed or tight-walled poultry house with a solid floor would keep them too warm and result in lowered production and increased respiratory problems. Shade over and around these houses is very important. If the ground around the houses is not shaded, heat will bounce into the houses.

Roof

The roof must protect the chickens from the weather. In Liberia thatch roofing keeps the birds cool, but it must be replaced more often than most other materials. Since it is cheap and readily available to the small farmer or rural family, it is most likely to be used. Aluminum, which reflects the heat of the sun, and asbestos, an efficient insulator, are desirable roofing materials in the tropics. Zinc, which is commonly used to roof houses in Liberia, is undesirable for chicken houses because it is an efficient conductor of heat.

Whatever the roofing material, the roof must have an overhang of 1m (3') on all sides to prevent rain from blowing inside the house. It may be desirable to slope the overhang toward the ground.

Feeders

Feeders and waterers are made from 10cm to 12.5cm (4" to 5") diameter bamboo of the desired length (see Figure 1). A node or joint must be left intact in each end of the bamboo section to keep the feed or water in. A section 7.5cm to 10cm (3" to 4") wide around half the circumference of the bamboo, except for 7.5cm (3") sections on the ends, is removed to make a kind of trough. All nodes between the ends are removed. These feeders must be fastened at the base, to keep them from rolling.

The feeders are fastened to the outside of the walls about 15cm (6") above floor level. The hens place their heads through the bamboo strips to feed or drink, thus conserving floor space for additional chickens.

Nests

The demonstration nests are 38cm (15") long, 30cm (12") wide, and 35.5cm (14") high (see Figure 3). The strips used on the floor of the nest are about 13mm (1/2") wide, spaced 13mm (1/2") apart, and must be very smooth. The floor slopes 13mm (1/2") from front to back, so that when the eggs are laid they will roll to the back of the nest. An opening 5cm (2") high at the back of the nest allows the eggs to roll out of the nest into an egg catch (see Figure 1). This type of nest results in cleaner eggs and fewer broken eggs. It also yields better quality eggs because they begin to cool as soon as they roll out of the nest. In addition, the eggs are outside the nest where egg-eating hens cannot reach them. Placing the egg catch so it protrudes outside the wall of the house allows the eggs to be gathered from outside. Placing the nests 1 meter (3') above the floor conserves floor space and permits more laying hens to be placed in the laying house. One nest is put in for every five hens.

In laying houses, nests are also constructed of split bamboo for unobstructed ventilation. Conventional lumber nests are hotter; this may cause hens to lay eggs on the floor instead of in the nests.

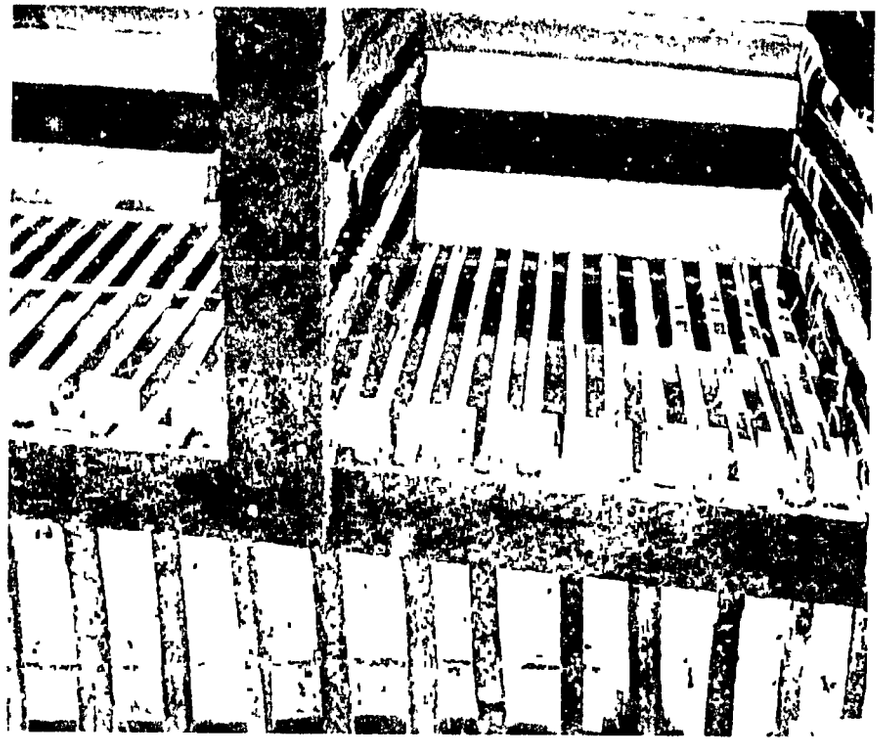

FIGURE 7. NESTS IN BAMBOO POULTRY HOUSE.

This means more dirty eggs, more broken eggs, and more likelihood of the hens eating the broken eggs. The only way to cure a hen of eating eggs once the habit is formed, is to kill her. In addition, as the hens enter the nests they sit on eggs laid previously by other hens, keeping them warm. The quality of eggs deteriorates very fast under these conditions.

Source:

USAID, Monrovia, Liberia, described in OTS Information Kit, Vol. I, No. 5, May 1961.

EARTH BORER

This simple, lightweight inexpensive earth borer developed in India can be used for digging post holes, latrine holes and in fact any hole with a diameter from 20cm (8") to 61cm (24") or even larger. It works well only in certain types of soil.

The borer can be used for making holes up to 4.5m (15') deep. A steel-pipe handle would increase this to about 7.6m (25').

A similar earth borer, the Ulti-Balti, is manufactured by the Agricultural Development Society, P.O. Naini, Allahabad, U.P., India.

Tools and Materials

Pole: 4.5m (15') to 5.5m (18') long, 38mm (1 1/2") in diameter. Bamboo will serve, but is not very strong. 2.5cm (1") diameter pipe would be good.

Barrel metal: 23cm x 63.5cm (9" x 25"), for blade. (Tough steel 1.5mm (1/16") thick is better.)

Strap iron: 6mm x 2.5cm x 28cm (1/4" x 1" x 11"), 2 pieces.

2 Machine bolts: 10mm x 5cm (3/8" x 2") with nuts and lockwashers, for attaching handle to straps.

4 Machine bolts: 10mm (3/8") in diameter and 19mm (3/4") long with nuts and lockwashers for attaching straps to blade.

8 Iron rivets: 6mm (1/4") in diameter and 10mm (3/8") long, to fasten blade seam.

Drill, with 6mm (1/4") and 10mm (3/8") bits. (If a drill is not available, holes in the seam of the blade can be punched.)

Hammer and anvil
Wrench
Heavy tinsnips
File

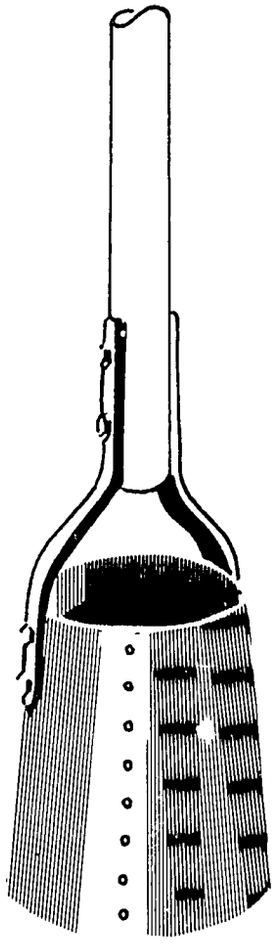

FIGURE 1

Making the Earth Borer

1. Trace the outline of Figure 2 on the metal, and cut the blade to shape. Mark the locations for bolt holes for attaching the straps. (The straps can be riveted with 8 rivets rather than bolted with 4 bolts.)

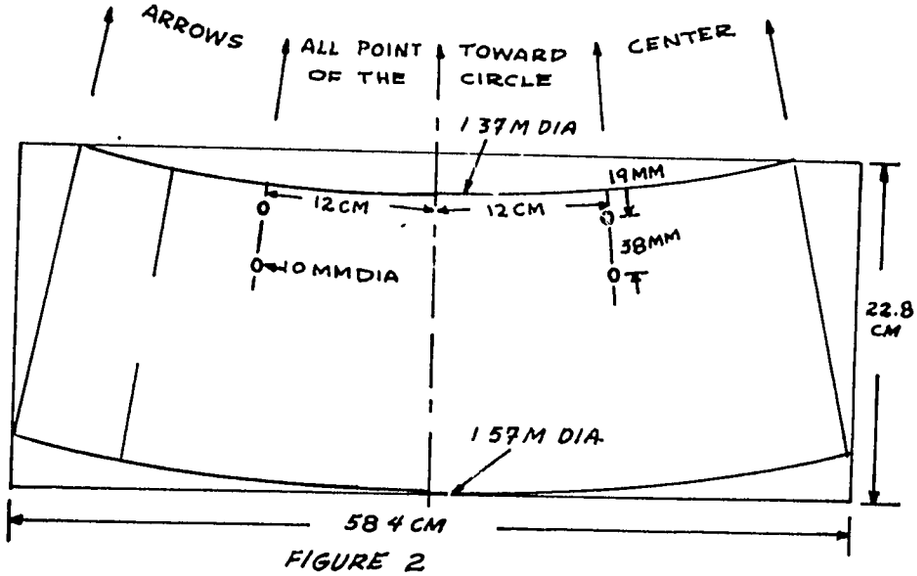

FIGURE 2

2. Drill the 10mm (3/8") diameter holes for the strap bolts.

3. Bend the blade into an open cone, 15.2cm (6") diameter at the top and 17.8cm (7") diameter at the bottom, with a 2.5cm (1") overlap and rivet or braze.

4. Mark the location for the holes in the end of the straps from the holes already drilled in the blade to be sure they will line up.

5. Drill the holes in the straps to attach to the blade.

6. Bend the straps to shape and bolt on to the outside of the blade.

7. Drill the holes for attaching the handle with the bamboo in place to insure that these holes line up and that the mounted handle will be straight.

8. Mount the handle, and file off any rough spots or sharp corners.

Using the Earth Borer

To work with the earth borer, clear the site of weeds and dig a shallow hole of the proper diameter. Bring the borer down into the hole with force, then raise it; repeat this up and down motion until the borer fills with soil. Because the blade tapers toward the top, dirt is held tightly inside the cutter. Once the borer is full, remove it from the hole, empty it and repeat the operation.

For holes with diameters larger than that of the borer, move the blade around on different strokes to cover the whole area.

Source:

Mason Vaugh, VITA Volunteer, Wooster, Ohio. Agricultural Development Society Catalog.

Silage for Dairy Cows

The small dairy farmer who maintains five or six cows on two or three hectares (four or five acres) of fodder and pasture grass is usually faced with a serious decline in milk production during dry or cold periods. The decline in milk production is invariably the result of the seasonal scarcity of fresh, succulent, nutritious feed. The absence of good feed usually means that cows are obliged to eat dry, strawy, weedy grass which not only lacks nutritive value, but often causes digestive troubles, constipation, and difficult birth. All these troubles can be completely eliminated from the farm, easily and cheaply; good health and a high level of production can be maintained--by the use of silage.

Silage can be stored in permanent or temporary silos. Permanent silos can be either upright tower-shaped structures (see Figure 1) or horizontal, like the trench silo (see Figures 2, 3 and 4). Upright stack silos (see Figure 5) and fence silos are examples of temporary silos. The use of successive rings of fencing is becoming widespread; these silos can be lined with plastic or paper or they can be unlined. Many farmers have saved the money needed for permanent silos by using temporary silos for several years.

Losses of silage vary with the type of silo, the crop ensiled, its stage of maturity and moisture content, fineness of chopping and the extent to which air and water have been excluded from the silage. Losses run from 5 to 20 percent in permanent upright silos; from 10 to 30 percent in permanent horizontal silos; from 15 to 50 percent in temporary trench, fence and stack silos.

A silo should be located near the barn to keep to a minimum the time and labor involved in feeding.

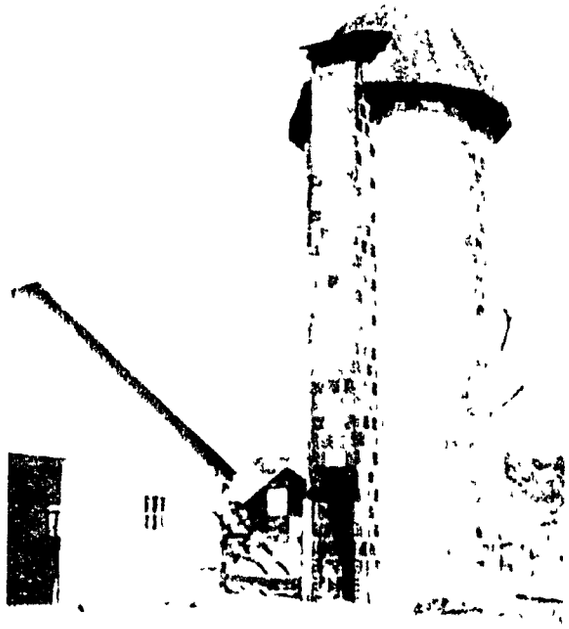

FIGURE 1. TILE-BLOCK TOWER SILO WITH TILE CHUTE.

Detailed instructions on silo building are given in:

> "Farm Silos," Miscellaneous Publication No. 810, Agricultural Research Service, U.S. Department of Agriculture, 1967 (revised). For sale by the Superintendent of Documents, U.S. Government Printing Office, Washington, D.C. 20402. Price 20 cents.

It is not worth while to make a silo of less than four tons capacity, except under very special conditions. Spoilage in smaller silos is often excessive. A cow of average size not provided with any other fodder will consume about 23kg (50 pounds) of silage in 24 hours; on this basis a farmer knowing the number of cows to be provided for and the approximate length of the period during

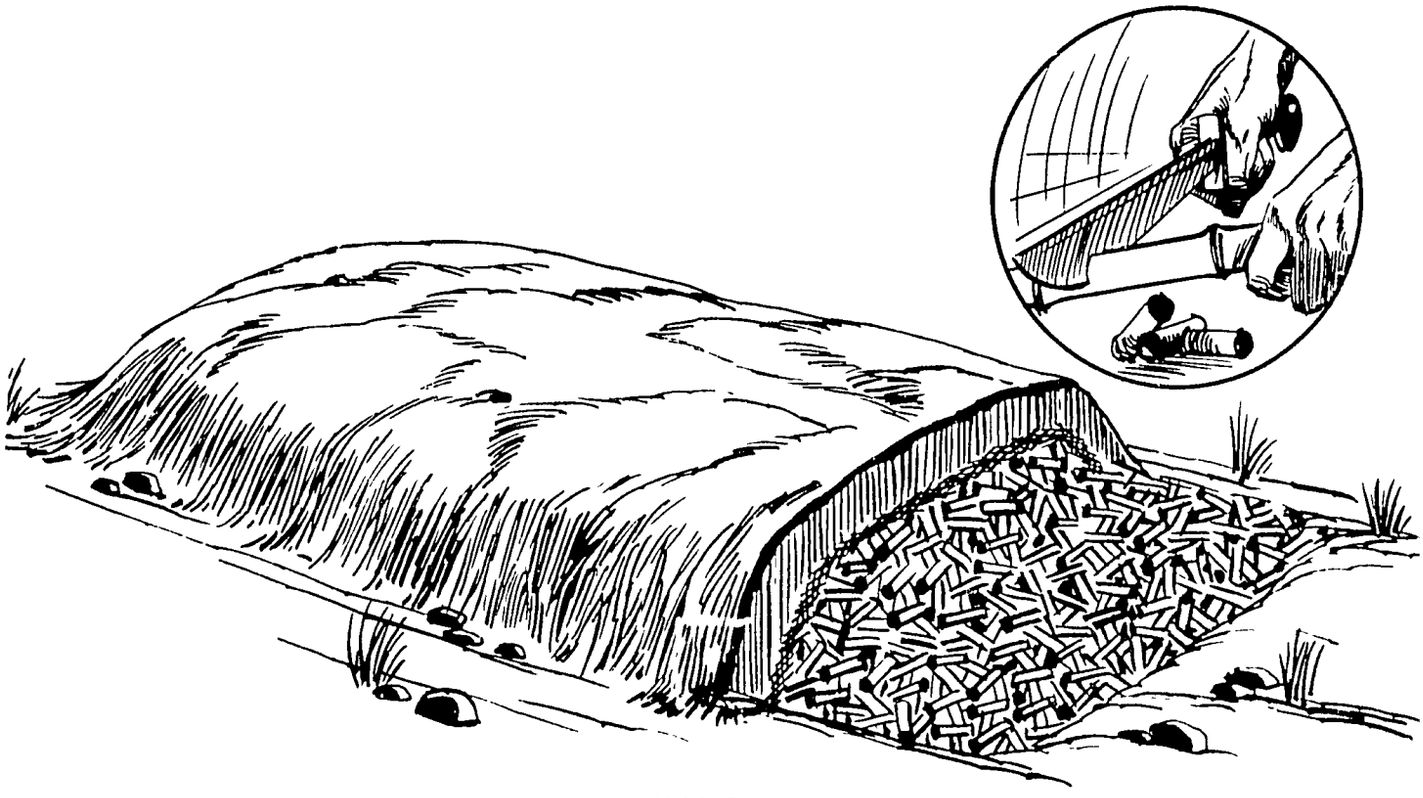

FIGURE 2

which silage is to be used, may estimate the quantity needed; for example:

20 cows @23kg (50 pounds) per day for 90 days	41,400kg (90,000 pounds)
5 heifers @14kg (30 pounds) per day for 90 days	6,300kg (13,500 pounds)
5 calves @7kg (15 pounds) per day for 90 days	3,150kg (6,750 pounds)
	50,850kg (110,250 pounds)

51 metric tons (56 short tons)

The bare requirements would be 51 metric tons (56 short tons) of silage, and an allowance for wastage should be added. The tables may be used to estimate the dimensions of a silo.

A silo of ten tons capacity or less should be filled in two operations, that is, on two separate days with two or three days between operations. Similarly, a larger silo should be filled in proportionate operations, though this is not so essential as with the smaller size.

Material for silage varies considerably: Corn, guinea corn, sugar cane leaves, uba cane leaves, napier grass, guatemala grass may be used singly or in mixtures; the important point to be borne in mind is that the material

Dimensions in Meters (Feet) Top Width	Bottom Width	Depth	Approximate Kilograms (Pounds) of Silage Per 30cm (1') of Length
2.4(8)	1.8(6)	1.8(6)	756 (1680)
3 (10)	2.1(7)	1.8(6)	918 (2040)
3.7(12)	2.4(8)	1.8(6)	1080 (2400)
2.4(8)	1.8(6)	2.1(7)	882 (1960)
3 (10)	2.1(7)	2.1(7)	1071 (2380)
3.7(12)	2.4(8)	2.1(7)	1260 (2800)
3 (10)	1.8(6)	2.4(8)	1152 (2560)
3.7(12)	2.4(8)	2.4(8)	1440 (3200)
4.3(14)	3 (10)	2.4(8)	1728 (3840)

Table 1. Trench silo capacities

should be young, fresh and green. Uba and sugar cane should be cut before the stem is formed, guinea grass should be cut before flowering and seeding takes place; napier, guatemala, and elephant should be cut while the stems are still tender and green. If only fresh, leafy growth described above is used, there is no need for chopping the material as it is brought to the silo. It should be scattered thinly over the entire surface of the silo, and should be constantly trampled to cause consolidation. Trampling close to the walls is especially important.

Silage which is considerably more nutritious than grass silage can be produced by combining fresh young leguminous fodders with grass when filling of the silo. Cow peas, edua peas, soya beans, Bengal beans, and St. Vincent plum fodders have been used with success at the level of 20-25% of the total bulk. But this material must be chopped.

The use of molasses is recommended in all silos, for increased palatability, increased nutritive value, and in the case of young grasses, or silage with leguminous mixtures, as an aid to the essential fermentation. Molasses should be used at the rate of 10kg per metric ton (20 pounds per ton) of grass material, as follows: if the material is wet with rain or dew, add two parts of water to one of molasses before application; if the material is dry, add four parts of water to one of molasses. As each layer of material, several centimeters or a few inches thick, is laid down, sprinkle on the molasses-water mixture, unless a blower with a continuous molasses sprayer attached is used. In leguminous mixtures 25% more molasses should be used.

When it is not possible to obtain young, fresh material, and older material must be used, then chopping is essential. Once the material has been chopped the remaining operations are similar to those described above, with

Inside Diameter of Silo in Meters	Depth of Silage in Meters 2.4	3	3.7	4.3	4.9	5.5	6.1	6.7	7.3	7.9	8.5	9.1
3	9.9	12.6	15.3	18	20.7	23.4	25.2	28.8	31.5	35.1	37.8	42.3
3.7	14.4	18	21.6	26.1	29.7	34.2	36	40.5	45	49.5	54.9	60.3
4.3	18.9	24.3	29.7	35.1	40.5	45.9	48.6	54.9	61.2	67.5	74.7	81.9
4.9	25.2	31.5	38.7	45.9	53.1	61.3	63.9	72	81	88.2		

Table 2. Number of metric tons of silage in a vertical silo.

the exception that only 6kg of molasses need be used per metric ton (12 pounds per ton) of grass material plus 35% more if legumes are included.

After a silo has been filled level with the top and has been thoroughly trampled, the silage will settle gradually over a period of several days, bringing the need for refilling once or perhaps twice to compensate for shrinkage. After the final refill a thick layer of dried grass should be laid over the silage and trampled down; finally, a few heavy logs laid over the dried layer will assist consolidation. A pointed roof over the silo with eaves reaching down below the rim will shed rain water.

Silage made in the spring of the year when grass is young and nutritious will keep perfectly until the winter or drought period comes; then it is possible to supply cows with feed every bit as nutritious and as palatable as fresh grass in the natural state. It is true that some cows do not take naturally and readily to silage, but they may be taught to consume it with relish.

When a silo is opened to feed cows, logs and the dried grass layer should be removed. It is commonly found that a layer of silage several centimeters (a few inches) thick from the top downwards will have spoiled--turned black or slimy with white streaks of fungus

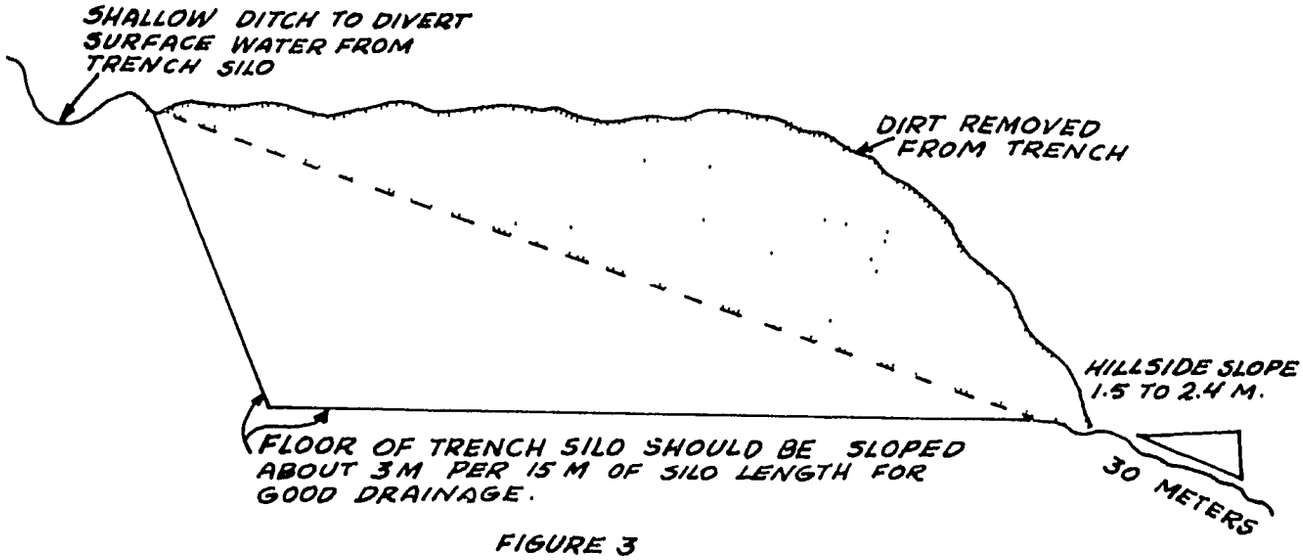

FIGURE 3

WARNING -- GAS DANGER IN SILOS

Suffocating and, in some cases, poisonous gas may be present around silos. Suffocating gas from fermenting silage, mostly carbon dioxide, forms in all silos shortly after filling begins and continues until fermentation stops. Poisonous gas, when present, is nitrogen dioxide. Its color and density vary with temperature. At room temperature it is orange yellow and 2 1/2 times as heavy as air. As the temperature rises, its color becomes darker and its density becomes lighter. The gas being heavier than air, collects and remains in any depression or enclosed space when there is no strong, free movement of air. Danger of nitrogen dioxide gas occurs only during filling and for about a week after.

Many lives have been lost because of carelessness in entering a silo where there may be danger of gas. Gas is a particular hazard in belowground silos. To stir the air in a silo, tie a rope to a basket, a blanket, a large piece of canvas or a tree branch and then drop it into the silo and raise it a number of times.

FIGURE 4

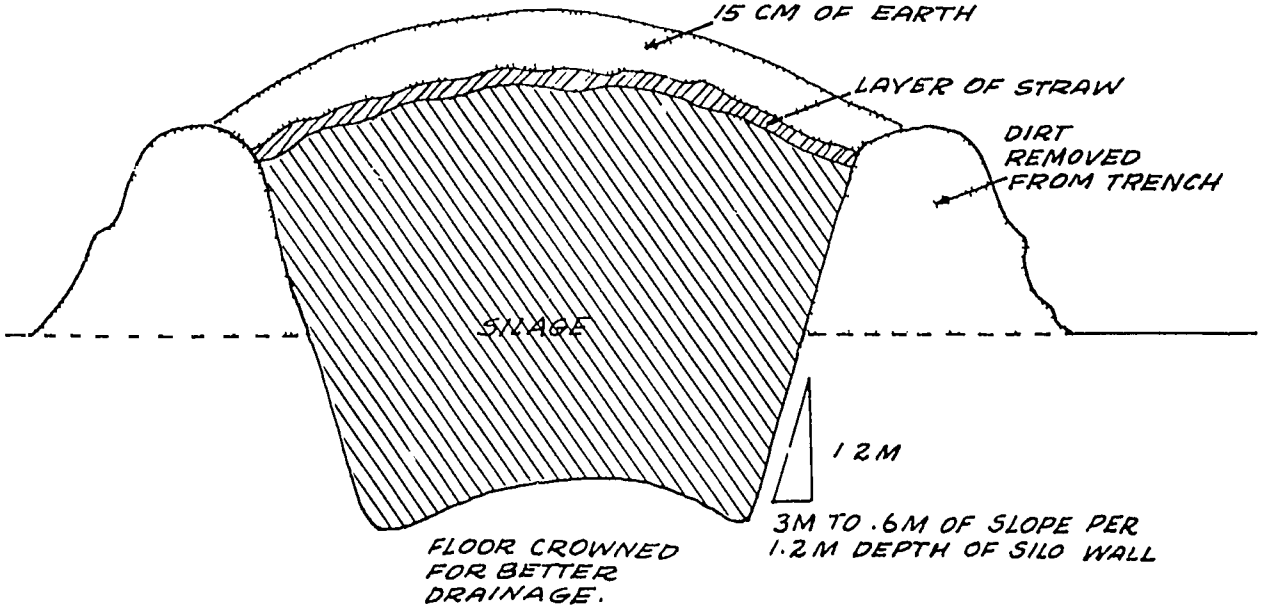

here and there. This should be thrown away.

The color of the good silage exposed below may be green, yellow-green, or brownish-green, and it will have a strong pleasant smell; there will be no sliminess or streaks of fungus. The silage may be fed at will to cattle, care being taken only that each day's supply should be removed from the whole surface of the silage rather than from one spot; in this way an even surface will be maintained and no one section will be over-exposed to air. After each day's supply has been taken out, the surface of the silage should be covered with old bags to prevent drying out; if it should become necessary to interrupt the feeding of silage for more than a day or two, then the silage must be sealed off as it was when the silo was first filled.

Source:

The Farmer's Guide Jamaica Agricultural Society, Kingston, Jamaica, 1962 and Marvin D. Van Peursem, VITA Volunteer, Newton, Iowa

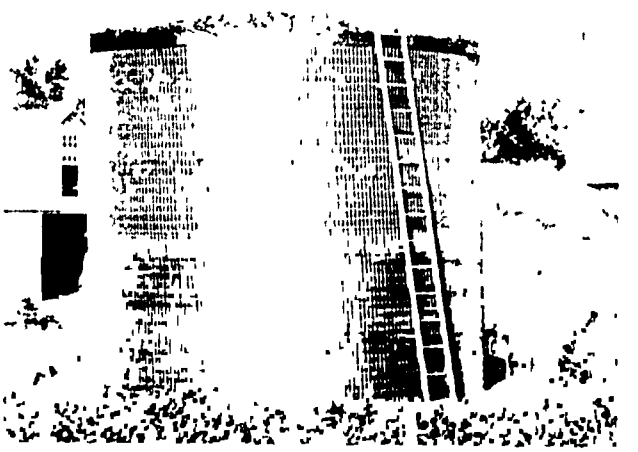

FIGURE 5.

APPENDIX

Simple methods are given here for converting English and metric units of measurement. Following these is a series of useful conversion tables for units of area, volume, weight, pressure and power.

LENGTH CONVERSION

The chart in Figure 3 is useful for quick conversion from meters and centimeters to feet and inches, or vice versa. For more accurate results and for distances greater than 3 meters, use either the tables in Figure 2 or the equations.

The chart in Figure 3 has metric divisions of one centimeter to three meters, and English units in inches and feet to ten feet. It is accurate to about plus or minus one centimeter.

Example:

An example will explain how to use the tables. Suppose you wish to find how many inches are equal to 66cm. On the "Centimeters into Inches" table look down the leftmost column to 60cm and then right to the column headed 6cm. This gives the result, 25.984 inches.

FIGURE 1

Equations:

1 inch = 2.54cm
1 foot = 30.48cm
= 0.3048m
1 yard = 91.44cm
= 0.9144m
1 mile = 1.607km
= 5280 feet
1cm = 0.3937 inches
1m = 39.37 inches
= 3.28 feet
1km = 0.62137 miles
= 1000 meters

FIGURE 2

INCHES INTO CENTIMETERS
(1 in. = 2 539977 cm)

inches	0	1	2	3	4	5	6	7	8	9
0	cm	2 54	5 08	7 62	10 16	12 70	15 24	17 78	20 32	22 86
10	25 40	27 94	30 48	33 02	35 56	38 10	40 64	43 18	45 72	48 26
20	50 80	53 34	55 88	58 42	60 96	63 50	66 04	68 58	71 12	73 66
30	76 20	78 74	81 28	83 82	86 36	88 90	91 44	93 98	96 52	99 06
40	101 60	104 14	106 68	109 22	111 76	114 30	116 84	119 38	121 92	124 46
50	127 00	129 54	132 08	134 62	137 16	139 70	142 24	144 78	147 32	149 86
60	152 40	154 94	157 48	160 02	162 56	165 10	167 64	170 18	172 72	175 26
70	177 80	180 34	182 88	185 42	187 96	190 50	193 04	195 58	198 12	200 66
80	203 20	205 74	208 28	210 82	213 36	215 90	218 44	220 98	223 52	226 06
90	228 60	231 14	233 68	236 22	238 76	241 30	243 84	246 38	248 92	251 46

CENTIMETERS INTO INCHES
(1 cm. = 0 3937 in.)

cm.	0	1	2	3	4	5	6	7	8	9
0	inches	0 394	0.787	1 181	1 575	1 969	2 362	2 756	3 150	3.543
10	3 937	4 331	4.724	5 118	5 512	5 906	6 299	6 693	7 087	7.480
20	7.874	8 268	8 661	9 055	9 449	9.843	10 236	10 630	11 024	11 417
30	11 811	12 205	12 598	12 992	13 386	13.780	14 173	14 567	14 961	15 354
40	15 748	16 142	16 535	16 929	17 323	17 717	18.110	18 504	18 898	19 291
50	19 685	20 079	20 472	20 866	21 260	21 654	22 047	22 441	22 835	23 228
60	23 622	24 016	24 409	24 803	25 197	25 591	25 984	26 378	26 772	27 165
70	27 559	27 953	28 346	28.740	29 134	29 528	29 921	30 315	30 709	31 102
80	31 496	31 890	32 283	32 677	33 071	33 465	33 858	34 252	34 646	35 039
90	35 433	35 827	36 220	36 614	37 008	37 402	37.795	38 189	38 583	38 976

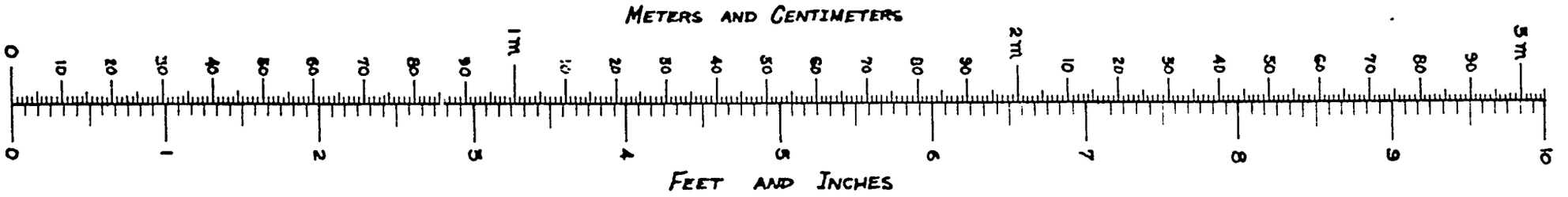

FIGURE 3

WEIGHT CONVERSION

The chart in Figure 5 converts pounds and ounces to kilograms and grams or vice versa. For weights greater than ten pounds, or more accurate results, use the tables (Figure 4) or conversion equations. See "Length Conversion," Figure 2, for an example of the use of the tables.

On the chart, notice that there are sixteen divisions for each pound to represent ounces. There are 100 divisions only in the first kilogram, and each division represents ten grams. The chart is accurate to about plus or minus twenty grams.

Equations:

1 ounce = 28.35 grams
1 pound = 0.4536 kilograms
1 gram = 0.03527 ounce
1 gram = 2.205 pounds

FIGURE 4

KILOGRAMS INTO POUNDS
(1 kg. = 2.20463 lb.)

kg	0	1	2	3	4	5	6	7	8	9
0	lb	2 20	4 41	6 61	8 82	11 02	13 23	15 43	17 64	19 84
10	22 05	24 25	26 46	28 66	30 86	33 07	35 27	37 48	39 68	41 89
20	44 09	46 30	48 50	50 71	52 91	55 12	57 32	59 53	61 73	63 93
30	66 14	68 34	70 55	72 75	74 96	77 16	79 37	81 57	83 78	85 98
40	88 19	90 39	92 59	94 80	97 00	99 21	101 41	103 62	105 82	108 03
50	110 23	112 44	114 64	116 85	119 05	121 25	123 46	125 66	127 87	130 07
60	132 28	134 48	136 69	138 89	141 10	143 30	145 51	147 71	149 91	152 12
70	154 32	156 53	158 73	160 94	163 14	165 35	167 55	169 76	171 96	174 17
80	176 37	178 58	180 78	182 98	185 19	187 39	189 60	191 80	194 01	196 21
90	198 42	200 62	202 83	205 03	207 24	209 44	211 64	213 85	216 05	218 26

POUNDS INTO KILOGRAMS
(1 lb = 0 45359 kg.)

lb.	0	1	2	3	4	5	6	7	8	9
0	kg	0 454	0 907	1 361	1 814	2 268	2 722	3 175	3 629	4 082
10	4 536	4 990	5 443	5 897	6 350	6 804	7 257	7 711	8 165	8 618
20	9 072	9 525	9 979	10 433	10 886	11 340	11 793	12 247	12 701	13 154
30	13 608	14 061	14 515	14 969	15 422	15 876	16 329	16 783	17 237	17 690
40	18 144	18 597	19 051	19 504	19 958	20 412	20 865	21 319	21 772	22 226
50	22 680	23 133	23 587	24 040	24 494	24 948	25 401	25 855	26 308	26 762
60	27 216	27 669	28 123	28 576	29 030	29 484	29 937	30 391	30 844	31 298
70	31 751	32 205	32 659	33 112	33 566	34 019	34 473	34 927	35 380	35 834
80	36 287	36 741	37 195	37 648	38 102	38 555	39 009	39 463	39 916	40 370
90	40 823	41 277	41 730	42 184	42 638	43 091	43 545	43 998	44 452	44 906

FIGURE 5

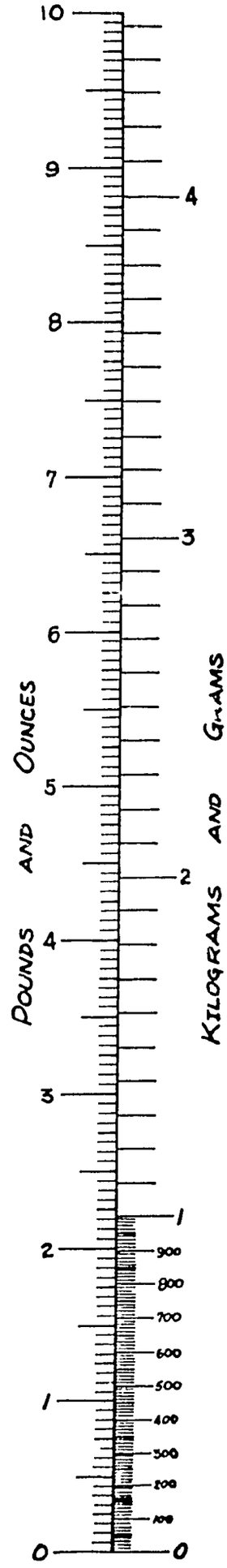

FIGURE 1

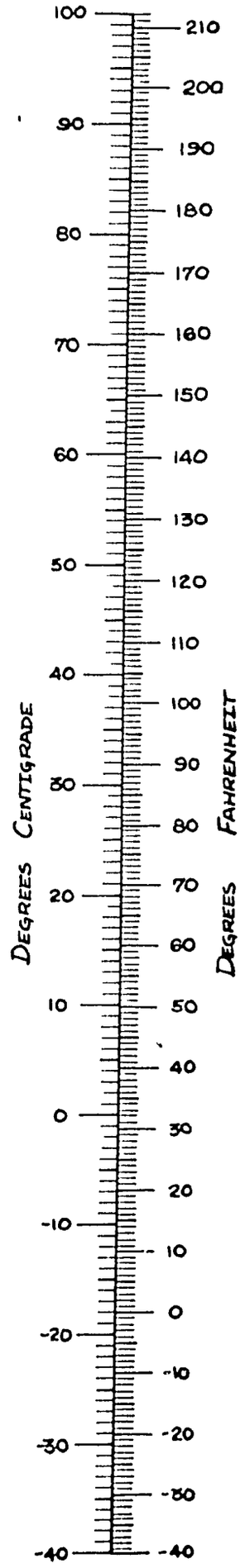

TEMPERATURE CONVERSION

The chart in Figure 1 is useful for quick conversion from degrees Celsius (Centigrade) to degrees Fahrenheit and vice versa. Although the chart is fast and handy, you must use the equations below if your answer must be accurate to within one degree.

Equations:

Degrees Celsius = 5/9 x (Degrees Fahrenheit -32)

Degrees Fahrenheit = 1.8 x (Degrees Celsius) +32

Example:

This example may help to clarify the use of the equations; 72F equals how many degrees Celsius?

72F = 5/9 (Degrees F -32)

72F = 5/9 (72 -32)

72F = 5/9 (40)

72F = 22.2C

Notice that the chart reads 22C, an error of about 0.2C.

Conversion Tables

Units of Area

1 Square Mile	= 640 Acres	= 2.5899 Square Kilometers
1 Square Kilometer	= 1,000,000 Square Meters	= 0.3861 Square Mile
1 Acre	= 43,560 Square Feet	
1 Square Foot	= 144 Square Inches	= 0.0929 Square Meter
1 Square Inch	= 6.452 Square Centimeters	
1 Square Meter	= 10.764 Square Feet	
1 Square Centimeter	= 0.155 Square Inch	

Units of Volume

1.0 Cubic Foot	= 1728 Cubic Inches	= 7.48 U.S. Gallons
1.0 British Imperial Gallon	= 1.2 U.S. Gallons	
1.0 Cubic Meter	= 35.314 Cubic Feet	= 264.2 U.S. Gallons
1.0 Liter	= 1000 Cubic Centimeters	= 0.2642 U.S. Gallons

Units of Weight

1.0 Metric Ton	= 1000 Kilograms	= 2204.6 Pounds
1.0 Kilogram	= 1000 Grams	= 2.2046 Pounds
1.0 Short Ton	= 2000 Pounds	

Conversion Tables

Units of Pressure

1.0 Pound per square inch	= 144 Pounds per square foot
1.0 Pound per square inch	= 27.7 Inches of Water*
1.0 Pound per square inch	= 2.31 Feet of Water*
1.0 Pound per square inch	= 2.042 Inches of Mercury*
1.0 Atmosphere	= 14.7 Pounds per square inch (PSI)
1.0 Atmosphere	= 33.95 Feet of Water
1.0 Foot of Water = 0.433 PSI	= 62.355 Pounds per square foot
1.0 Kilogram per square centimeter	= 14.223 Pounds per square inch
1.0 Pound per square inch	= 0.0703 Kilogram per square centimeter

* at 62 degrees Fahrenheit (16.6 degrees Celsius)

Units of Power

1.0 Horsepower (English)	= 746 Watts = 0.746 Kilowatt (KW)
1.0 Horsepower (English)	= 550 Foot Pounds per second
1.0 Horsepower (English)	= 33,000 Foot Pounds per minute
1.0 Kilowatt (KW) = 1000 Watts	= 1.34 Horsepower (HP) English
1.0 Horsepower (English)	= 1.0139 Metric Horsepower (cheval-vapeur
1.0 Metric Horsepower	= 75 Meters X Kilogram/Second
1.0 Metric Horsepower	= 0.736 Kilowatt = 736 Watts