AGENCY FOR INTERNATIONAL DEVELOPMENT
WASHINGTON, D. C. 20523

BIBLIOGRAPHIC INPUT SHEET

FOR AID USE ONLY
Batch 69

1. SUBJECT CLASSIFICATION

A. PRIMARY
Health

NS00-0000-0000

B. SECONDARY
Tropical diseases

2. TITLE AND SUBTITLE
Photoperiod entrainment of two Anopheles mosquitoes

3. AUTHOR(S)
Wilton,D.P.; Fay,R.W.

4. DOCUMENT DATE
1970

5. NUMBER OF PAGES
6p.

6. ARC NUMBER
ARC

7. REFERENCE ORGANIZATION NAME AND ADDRESS
HEW/PHS/CDC

8. SUPPLEMENTARY NOTES *(Sponsoring Organization, Publishers, Availability)*

(In Mosquito news,v.30,no.4,p.628-632)

9. ABSTRACT

10. CONTROL NUMBER
PN-AAE-568

11. PRICE OF DOCUMENT

12. DESCRIPTORS
Photoperiodism
Mosquitoes

13. PROJECT NUMBER

14. CONTRACT NUMBER
PASA RA(HA)-7-00 Res.

15. TYPE OF DOCUMENT

AID 590-1 (4-74)

PASA RA(HA)-7-CC Pe
HCW/PHS

[Reprinted from MOSQUITO NEWS, Vol. 30, No. 4, December, 1970]

REPRINT NUMBER

487

Technical Development Laboratories
Laboratory Division
Center for Disease Control
P. O. Box 2167 · Savannah, Ga. 31402

PHOTOPERIOD ENTRAINMENT OF TWO *ANOPHELES* MOSQUITOES[1]

DONALD P. WILTON AND RICHARD W. FAY

The well-recognized cyclic nature of certain aspects of insect behavior is frequently an expression of endogenous circadian rhythms entrained (set in phase) by the photoperiod (Harker, 1961; Beck, 1968). Among mosquitoes, such diverse rhythmic activities as oviposition, pupation, nectar feeding, biting, and flight are recognized as circadian, the times at which these activities occur being established by the daily cycle of light and dark. Evidence for such control of flight activity in anophelines has been found for several species (Bates, 1941; Eyles and Bishop, 1943; Jones *et al.*, 1966; Taylor, 1969). Anophelines frequently show a pattern of daytime seclusion and quiescence with periods of intense activity associated with sunset and sunrise. These habits can have inconvenient consequences for laboratory studies of anopheline responses to environmental factors. Assessments of behavior made during conventional working hours may be seriously biased because of the mosquitoes' low level of responsiveness during the day. Laboratory evaluations of light trap designs are particularly subject to this limitation. Ordinarily, such tests must be done at night because the alternative of daytime tests in a dark chamber does not include the mosquitoes' normal periods of maximum activity.

Artificially entrained mosquitoes appear to provide a way of meeting this objection. The procedure described in this paper was devised to determine whether photoperiod manipulation could be used to produce adults of *Anopheles albimanus* Wied. and *A. stephensi* Liston with high levels of flight activity at predetermined times during the day.

METHODS AND MATERIALS. The mosquitoes used in these tests were obtained from insectary colonies long established at Technical Development Laboratories. The *A. albimanus* strain came from El Salvador. The *A. stephensi* colony was started with material originally from India which came to this laboratory via colonies in London, England, and Atlanta, Georgia.

All specimens were received as pupae. Those to be used as controls emerged in netting-covered gallon cartons placed near a window to expose them to the natural

[1] From the Biology Section, Technical Development Laboratories, Laboratory Division, Center for Disease Control, Health Services and Mental Health Administration, Public Health Service, U.S. Department of Health, Education, and Welfare, Savannah, Georgia 31402.

photoperiod. Absorbent cotton pads saturated with 10 percent sucrose were kept on the netting to provide nourishment. No blood meals were offered. Temperatures of 78°–82° F. and humidities of 60–70 percent were experienced by these mosquitoes prior to testing. Test specimens were treated similarly except that their emergence cartons were placed in containers permitting the use of artificial photoperiods.

The size of the cartons required a larger photoperiod chamber than the useful lard can type described by Dutky *et al.* (1962) and by Cothran and Gyrisco (1966). Plywood boxes, with dimensions as shown in Figure 1, were used for photoperiod control. The removable cover of each box was provided with a 2-inch double overlap on all four sides. A 15-watt incandescent lamp was positioned at the center of the cover directly below a hinged vent that was opened and closed by a shutter motor.[2] The motor and lamp were connected to an electric time switch set to provide 12 hours of light (12L photophase) followed by 12 hours of darkness (12D scotophase). During the photophase the vent remained open, preventing heat buildup from the lamp. The vent was automatically closed at the beginning of the scotophase, keeping extraneous light out of the box while allowing unrestricted entry and use of the room. Three such photoperiod boxes were used to obtain 12L–12D photoperiods with subjective sunsets at selected times. Temperatures and relative humidities recorded

[2] Model 2C831, Dayton Electric Mfg. Co., Chicago, Illinois 60648. Use of trade names is for identification purposes only and does not constitute endorsement by the Public Health Service or the U.S. Department of Health, Education, and Welfare.

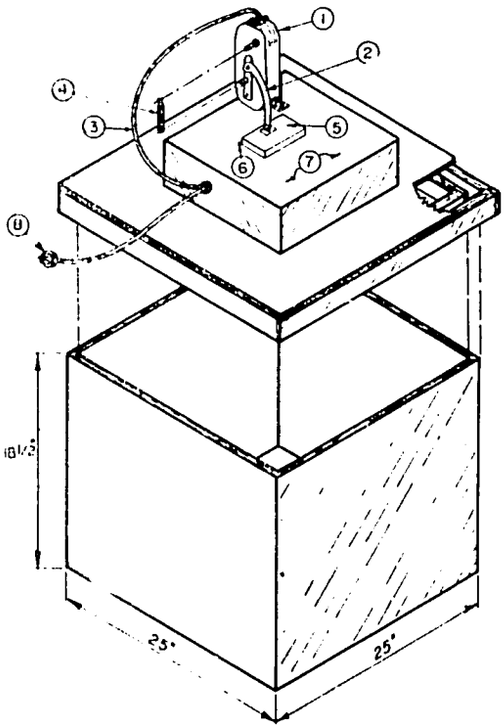

1. SHUTTER MOTOR (115V, 60 CYCLES)
2. VENT COVER ARM
3. LINE CORD TO MOTOR
4. VENT COVER RETURN SPRING
5. VENT COVER
6. VENT COVER HINGE
7. LAMP FIXTURE HOUSING
8. LINE CORD FROM TIMER

FIG. 1.—Photoperiod box.

ERRATA

Values, Table 1, are as follows:

Females	
No. released	% trapped
2097	87
2163	19
426	90
331	16
1841	92
1617	28

in the boxes ranged from 80°–84° F. and from 72–76 percent, respectively.

The levels of daytime flight activity of artificially and naturally entrained *A. albimanus* and *A. stephensi* were compared in a series of timer-controlled, 2-hour tests with ultraviolet traps. The tests were conducted with 5- to 6-day-old mosquitoes in a pair of 6 x 6 x 6 ft. white-walled chambers in a light-proof room. The mosquitoes were released in the darkened chambers at least ½ hour before the start of trap operation. The traps[3] employed a horizontally mounted 8-watt BLB fluorescent tube with a peak emission near 3650Å. Mosquitoes attracted to the light were swept by a fan-produced air stream into a pan of detergent solution. Two such traps, similarly placed in each chamber, were used alternately for experimental and control specimens to compensate for undetected differences. At the end of each test, untrapped mosquitoes were recovered with a small vacuum cleaner provided with a trap in the intake hose.

RESULTS AND DISCUSSION. *A. albimanus:* In Central America and the Caribbean the peak biting activity of this species is reported to occur during the early evening (Rachou *et al.*, 1965; Taylor, 1966). All tests, therefore, were begun ½ hour after subjective sunset to include this peak, should it occur with artificially entrained mosquitoes, within each of the 2-hour trapping periods selected. The subjective sunset times chosen for these tests were 8:30 a.m., 10:30 a.m. and 1:30 p.m. The effectiveness of the entrainment procedure is indicated in Table 1. In all these tests the catches of artificially entrained mosquitoes were markedly and consistently greater for both sexes than those of the naturally entrained controls. Captures of artificially conditioned males averaged 87–94 percent compared with 30–44 percent for the controls. For females the comparable catches were 87–92 percent and 16–28 percent, respectively.

These altered responses of mosquitoes conditioned to daytime sunsets appeared to demonstrate a reversal of their normal behavioral cycle. Attempts made to confirm this by tests conducted during the evening are summarized in Table 2. With trap operation from 6:30 to 8:30 p.m., captures of mosquitoes conditioned to a 10:00 a.m. sunset slightly exceeded those of the naturally entrained controls. Similar tests with specimens entrained by a 1:30 p.m. sunset showed artificially and naturally entrained males to be equally attracted by the trap, whereas artificially entrained females were caught in substantially fewer numbers than were control females. With mosquitoes conditioned to a 2:00 a.m. sunset, the responses of both sexes were markedly lower than those of the controls.

These results suggest several conclusions regarding the nightly activity pattern of *A. albimanus*. The large catch of specimens conditioned to sunset at 10:00 a.m. indicates a strong activity peak associated with dawn in addition to that associated with sunset. For insects accustomed to a 12-hour night from 10:00 a.m. to 10:00 p.m., the 6:30–8:30 p.m. trapping

[3] Model RD-1. IMS Corp., Albuquerque, New Mexico 87110.

TABLE 1.—Captures by U-V light trap of artificially and naturally entrained *Anopheles albimanus* at three times of day. (Totals of six replicates.)

Test period	Subjective sunset	Males		Females	
		No. released	% trapped	No. released	% trapped
9–11 a.m.	8:30 a.m.	2143	87	2097	87
	Normal	2141	30	2163	19
11 a.m.–1 p.m.	10:30 a.m.	344	92	426	90
	Normal	379	44	221	16
2–4 p.m.	1:30 p.m.	1900	94	1941	[illegible]
	Normal	1814	30	1617	28

TABLE 2.—Evening captures by U-V light trap of *Anopheles albimanus* conditioned to three subjective sunsets and to normal sunset.

	Males		Females	
Subjective sunset	No. released	% trapped	No. released	% trapped
10:00 a.m.[a]	669	96	623	88
Normal	541	89	686	82
1:30 p.m.[b]	1118	91	1013	69
Normal	847	92	938	85
2:00 a.m.[b]	987	27	857	28
Normal	629	77	768	74

[a] Two replicates.
[b] Three replicates.

period extended within an hour and a half of their sunrise. An increasing level of responsiveness toward the end of the dark period presaging a predawn activity peak would account for the large catch obtained.

The 6:30–8:30 p.m. trapping period occurred midway between sunset and sunrise for specimens conditioned to a 1:30 p.m. sunset. The high response level of the males (91 percent trapped) compares well with that of males exposed to the trap shortly after subjective sunset (87–94 percent trapped), indicating that male activity is sustained at the same level from sunset through at least the first half of the night. Female activity, though still at a relatively high level midway through the night (69 percent trapped), was noticeably reduced in comparison with that found during the first hour or two after subjective sunset.

Finally, the use of mosquitoes conditioned to a 2:00 a.m. sunset seemed to remove the influence of both subjective sunset and sunrise on their activity state during the trapping period. They acted much like naturally entrained mosquitoes exposed to the trap at midday.

A. stephensi: In Saudi Arabia, Daggy (1959) recorded the onset of feeding by *A. stephensi* immediately after sundown. On the basis of limited experimental data Strickland and Roy (1936) indicated that this species in India feeds most avidly just before midnight. Results of light trap tests with colonized *A. stephensi* verify an activity peak for females around midnight (Table 3.) In tests begun a half hour after subjective sunset, the response of artificially entrained females of this species, although several times greater than that of the controls, was nevertheless at a low level. At 3 hours after subjective sunset, the traps captured an average of 71 percent of the females released and at 4 hours the catch increased to 87 percent, a figure comparable to the results with *A. albimanus*. The controls in these tests averaged 2–7 percent captured.

The pattern of male response was very

TABLE 3.—Daytime captures by U-V light trap of artifically entrained *Anopheles stephensi* at ½, 3, and 4 hours after subjective sunset.

		Males		Females	
Test period	Subjective sunset	No. released	% trapped	No. released	% trapped
11:30 a.m.–1:30 p.m.[a]	11:00 a.m.	346	94	231	30
2:00–4:00 p.m.[a]	11:00 a.m.	513	94	290	71
12:30–2:30 p.m.[b]	8:30 a.m.	977	95	733	87

[a] Three replicates.
[b] Six replicates.

different from that of the females. Although the entrainment procedure was successful with both sexes, the time of testing had no apparent effect on the male catch. Tests begun ½, 3, and 4 hours after subjective sunset all resulted in more than 90 percent capture of artificially conditioned specimens and very small catches of controls. These results suggest that, like *A. albimanus*, males of *A. stephensi* in nature maintain a high level of activity throughout at least the first half of the night.

Preliminary tests designed to show a reversed behavior pattern with *A. stephensi* as a result of photoperiod manipulatio have demonstrated a definite change, although the response levels of mosquitoes conditioned to a late morning sunset were higher than anticipated. In 2-hour tests spanning midnight, catches averaged 22 percent for males and 47 percent for females compared with 82 and 84 percent, respectively, for controls conditioned by the natural photoperiod.

CONCLUSIONS. Both *A. albimanus* and *A. stephensi* responded readily and consistently to photoperiod manipulation. The behavioral cycles of other, perhaps most, night-biting mosquitoes can probably be rescheduled for experimental purposes in like manner. The convenience of being able to elicit valid nighttime reactions during the day is clear and the technique appears to offer a simple means of obtaining mosquito "activity profiles." In addition, the minimal responses shown by both species when exposed to the light trap at inappropriate times suggest it may be very important to consider the mosquitoes' activity state at the time of testing in any investigation of behavioral or physiological responses likely to be influenced by photoperiod.

SUMMARY. The susceptibility of the behavioral cycles of *A. albimanus* and *A. stephensi* to photoperiod manipulation was demonstrated in a series of daytime U-V light trap tests in darkened chambers. Photoperiod entrainment was shown to produce anophelines whose nocturnal activity peaks were moved to specific times during the day when they are normally quiet and unresponsive. The technique provides valid nighttime responses during conventional working hours for convenient study of the influences of environmental factors on anopheline behavior.

ACKNOWLEDGMENT. These studies were accomplished as part of a contractual agreement between the Center for Disease Control and the Agency for International Development.

Literature Cited

BATES, M. 1941. Laboratory observations on the sexual behavior of anopheline mosquitoes. J. Exptl. Zool. 86:153–173.

BECK S. D. 1968. Insect Photoperiodism. Academic Press. New York and London. 288 pp.

COTHRAN, W. R. AND GYRISCO, G. C. 1966. A modified photoperiod control device. J. Econ. Entomol. 59:236–238.

DAGGY, R. H. 1959. Malaria in oases of eastern Saudi Arabia. Amer. J. Trop. Med. Hyg. 8:223–291.

DUTKY, S. R., SCHECHTER, M. S. AND SULLIVAN, W. N. 1962. A lard-can device for experiments in photoperiodism. J. Econ. Entomol. 55:575.

EYLES, D. E. AND BISHOP, L. K. 1943. The microclimate of diurnal resting places of *Anopheles quadrimaculatus* Say in the vicinity of Reelfoot Lake. Pub. Hlth. Rpts. 58:217–230.

HARKER, J. E. 1961. Diurnal rhythms. Ann. Rev. Ent. 6:131–146.

JONES, M. D. R., FORD, M. G. AND GILLETT, J. D. 1966. Light-on and light-off effects on the circadian flight activity in the mosquito *Anopheles gambiae*. Nature 211:871–872.

RACHOU, R. G., LYONS, G., MOURRA-LIMA, M. AND KERR, J. A. 1965. Synoptic epidemiological studies of malaria in El Salvador. Amer. J. Trop. Med. Hyg. 14:1–62.

STRICKLAND, C. AND ROY, D. N. 1936. The prevalence and habits of anophelines in relation to physical conditions. Rivista di Malariologica (Rome) 15:171–186.

TAYLOR, B. 1969. Geographical range and circadian rhythms. Nature 222:296–297.

TAYLOR, R. T. 1966. The ecology of *Anopheles albimanus* (Wied.) in Haiti. Mosq. News 26:393–397.