AGENCY FOR INTERNATIONAL DEVELOPMENT
WASHINGTON, D. C. 20523

BIBLIOGRAPHIC INPUT SHEET

FOR AID USE ONLY
Batch 70

1. SUBJECT CLASSIFICATION

A. PRIMARY
Food production and nutrition — AQ10-0336-G635

B. SECONDARY
Food processing--Oil herbs and bushes--Soybean--India

2. TITLE AND SUBTITLE

Soybean processing feasibility study,volume II

3. AUTHOR(S)

(101) SERVOTECH,Bombay,India

4. DOCUMENT DATE	5. NUMBER OF PAGES	6. ARC NUMBER
1972	192p.	ARC

7. REFERENCE ORGANIZATION NAME AND ADDRESS

AID/ASIA/USAID/India

8. SUPPLEMENTARY NOTES *(Sponsoring Organization, Publishers, Availability)*

(V.1,192p.: PN-AAE-481)

9. ABSTRACT

10. CONTROL NUMBER

PN-AAE-482

11. PRICE OF DOCUMENT

12. DESCRIPTORS

Feasibility
Soybean
India
Project planning

13. PROJECT NUMBER

14. CONTRACT NUMBER

AID/ASIA/USAID/India

15. TYPE OF DOCUMENT

AID 890-1 (4-74)

THIS DOCUMENT HAS BEEN EVALUATED AS SUBSTANDARD COPY FOR ROUTINE REPRODUCTION. EFFORTS IN AID/W TO OBTAIN A MORE ACCEPTABLE COPY OF THE DOCUMENT HAVE NOT BEEN SUCCESSFUL. DESPITE THIS DISADVANTAGE, WE HAVE CHOSEN TO REPRODUCE THE DOCUMENT BECAUSE OF THE SUBJECT TREATED AND TO MAKE THE DISCERNIBLE INFORMATION AVAILABLE.

PROCESSING OF SOYBEANS
IN INDIA
FEASIBILITY STUDY (TECHNICAL)
VOLUME II

BY

SERVOTECH

DESIGN, CONSULTING AND
CONSTRUCTION ENGINEERS
POST BOX 6073
COLABA - BOMBAY-5 BR.

FOR

UNITED STATES AGENCY FOR
INTERNATIONAL DEVELOPMENT
INDIA.

VOLUME II - TABLE OF CONTENTS:

			PAGES:
1.	FULL FAT SOYFLOUR	...	1 - 6
2.	SOYMILK	...	7 - 18
3.	SOYPROTEIN CONCENTRATES AND ISOLATES	...	19 - 27
4.	SOYBEAN PROTEIN INDUSTRIAL PRODUCTS	...	28 - 58
5.	DEGUMMING & GUMS RECOVERY	...	59 - 70
6.	PROCESSING SOYBEAN OIL INTO HIGH QUALITY EDIBLE PRODUCTS	...	71 - 99
7.	CENTRIFUGAL SEPARATORS	...	100 - 112
8.	MISCELLA REFINING	...	113 - 118
9.	BLEACHING OF SOYBEAN OIL	...	119 - 129
10.	DEODORIZATION OF SOYBEAN OIL	...	130 - 147
11.	HYDROGENATION	...	148 - 171
12.	PRODUCTION OF HYDROGEN GAS	...	172 - 178
&	APPENDICES.		

FULL FAT SOYFLOUR.

Cooked unextracted soybeans have been tried in poultry feeding tests by Hill & Stephenson. They found substantial beneficial results. Experiments conducted at Purdue University on feeding swine with full fat flour have indicated comparable weight gains and food conversion efficiencies. Further work was also done by Mustakas et al at the Northern Regional Research Laboratory, Peoria.

The Process

The manufacture of full fat soyflour involves the following steps:

Soybeans are cleaned with extra care in the four stage cleaning equipment detailed elsewhere in this Report. The beans are dried through a paddle drier to reduce the moisture content. The hot beans are cooled through a cooling conveyor. The cooled beans are cracked in a standard cracking machine. The mixture of soybean meats and hulls are then separated, first through a Shaker-Separator with aspiration arrangement and finally on a gravity table to remove completely the hulls. The

practically dried meats are then pulverised in a hammer mill into grits.

Application of Heat - A delicate operation.

The grits are passed through a steam jacketted pre-conditioner in which the requisite amount of open steam is injected for conditioning them. The conditions of temperature and moisture should be carefully regulated. Lepkovsky suggests that:

"Heat must be applied cautiously and intillegently in the processing of foods. Those foods containing toxic proteins must be heated sufficiently to destroy their toxic properties, but they must not be overheated because excess heat decreases the biological value of non-toxic and detoxified proteins. Frequently, there is little difference between just enough and too much heat, so that careful control must be exercised in the heat processing of foods."

It is, therefore, obvious that in the manufacture of full fat flour from soybeans, great care should be taken in maintaining temperatures and pressures.

The conditioned soybean meats are then passed through a high-speed mixer where the feed stock is properly and homogeniously mixed before it is fed into the high temperature extruder. The extruder is the heart of the whole process.

The Extruder. In the Extruder, the oil cells of the seed are ruptured due to high levels of temperature, pressure and moisture existing in the barrel of the extruder. During passage through the various sections, the material is gradually subjected to increased pressure and temperature. By judicious selection of the diehead as well as the number and the diameter of the holes in the die, it is possible to modify the pressure in the unit. Finally the maximum pressure is created in the last taper screw or cold nose section. The temperature of the feed stock in this section attains high values. When the material extrudes through the final die, the sudden great reduction in pressure causes the material to expand instantaneously. This phenomenon will totally rupture the cells. Simultaneously the oil which is expelled in the cold nose section through the cells

structure as free oil is reabsorbed the moment the material passes through the die into the atmosphere. It is reported that the oil in the free state has higher digestability in various trials conducted by the University of Delware.

Advantages of pre-cooking.

The quest for protein supplements in human food has centred attention on full fat soyflour. The product obtained from the extruder is ground into a fine flour which is highly nutritious as human food. It provides protein of high biological value as well as fat energy at low cost. Full fat soyflour, being a precooked product, offers the following advantages:

a) The cereal portion will be fully gelatinised for maximum digestability and calorie availability.

b) It would help the binding of proteins, vitamins and minerals with carbohydrates to ensure even distribution in the product.

c) The cooked material could be formed into suitable shapes and textures to suit consumer acceptability.

d) Flavours and colours could be added to such cooked food to make the product broadbased and appealing.

Criteria for Edible Flour.

It also meets [illegible] recognised requirements as an edible flour:

1. It should give a soyflour with a high biological value.
2. The beans should be cooked to inactivate the growth of inhibitors in the beans.
3. The cooking should not impair the protein biological value.
4. It should not impair the protein solubility of the product.
5. The product should be bland and palatable.
6. It should not be bitter.
7. It should not have any 'beany' taste of the original soybean.
8. The product should have adequate shelf life at ambient temperatures.
9. It should be strictly in accordance with the high standards of sanitation.
10. The product should be reasonably economical.

Field Tests in Taiwan.

Extensive infant feeding trials were undertaken by DeMaeyer and his team. The trials were conducted in

a Nursery which was set up with the assistance of UNICEF on the campus of the University in Taipei. Infants usually four months old, from lower middle class families, were selected for these trials. It was observed that soy preparations were gradually and perfectly accepted, by babies. Weight gains were found to be generally good and in some cases excellent. In his report, DeMaeyer states as follows:

"These trials have thus established the usefulness of full fat soy products as practical and satisfactory alternatives to infant foods based on animal milk when they are fed at levels which are not critical from the protein and calorie view point ..... The practical value of soybean mixtures as alternate source of protein in the food of young children should lead to improvement of the nutritional situation in Taiwan if their significance is properly understood by the local health authorities."

As nearly 100 million children in the age group upto and including 5 years are said to be suffering from protein deficiency in the country, full fat soyflour will have an exceedingly important role to play in our country.

SOYMILK. *

Soymilk is very nutritious, it is cheap, and easy to make. The Chinese discovered the process about two thousand years ago. It looks as though it should be a major contributor to the protein-calorie malnutrition of tropical countries. The problem however is that soymilk has a terrible flavour. The flavour has been described as "beany", "bitter", "painty", "throat catching". No matter what you call the taste, most people find it objectionable.

About ten years ago the Food Technology group at Cornell University became interested in the soybean as a rich source of low-cost protein. They quickly came to the conclusion that soymilk provided a good vehicle to bring a nutritious, low cost protein food to people in the developing countries but that the bad flavour of soymilk was the principal obstacle to its widespread acceptance. A lengthy study of the chemistry, bio-

*Extracts from paper presented by Dr.Malcolm C.Bourne, Visiting Professor of Food Science, University of the Philippines and Associate Director, USAID/Cornell University contract-csd-1815, April 8, 1970.

chemistry and nutritional value of the soybean was initiated. At the present time, this work is being supported by a research grant from the U.S. Agency for International Development. Particular emphasis has been placed on determining the origin of the bad flavour of soymilk. For some years the experimental soymilks tasted so bad that it was difficult to find people who would consent to be on the taste panel.

Eventually it was found that the enzyme lipoxidase, which is naturally present in the soybean, was the cause of the trouble. As soon as the soybean is ground with water the lipoxidase acts on the unsaturated fatty acid chains producing a large number of smaller molecular weight compounds. By means of modern sophisticated chemical techniques such as gas-liquid chromatography, mass spectrometry, nuclear magnetic resonance, and infra-red and ultra-violet spectrometry eighty volatile compounds were isolated from soymilk and 41 of them were identified.

They are listed below :

VOLATILES FOUND IN COLD-GRIND SOYBEANS:

PENTANE	2 NONENAL
PENTANAL	DECANE
1 PENTEN-3-o1	HEPTADECANE
HEXANAL	VINYLETHYLKETONE
HEXANOL	VINYL AMYLKETONE
2 HEXENAL	PROPYLFURAN
2, 4 HEXADIENAL	PENTYLFURAN
HEXANOIC ACID	BENZALDEHYDE
HEPTANAL	N-PROPYLBENZENE
2 HEPTANONE	N-BUTYLEENZENE
OCTANAL	DIPHENYL ETHER
OCTANOL	GAMMANONALACTONE
3 OCTANOL	2 TRANS-4 CIS HEPTADIENAL
3 OCTANONE	2 TRANS-4 TRANS-HEPTADIENAL
2 OCTANONE	2 TRANS-4 CIS-DECADIENAL
2 OCTENAL	2 TRANS-4 TRANS-DECADIENAL
1 OCTEN-3-o1	2 TRANS-4 CIS-NONADIENAL
2 OCTEN-1-o1	2 TRANS-4 TRANS-NONADIENAL
1,7 OCTADIENE	5 HYDROXYMETHYLFURFURAL
NONANAL	

The majority of these compounds are aldehydes, ketones, or alcohols. At least 31 of these volatile compounds have some flavour impact, and with few exceptions, the flavour of the compound is unpleasant. One compound in particular has a typical "beany" note. This is ethyl vinyl ketone. The addition of 5 pp.m. of ethyl vinyl ketone to a bland-flavoured milk impacts a distinct "beany" flavour.

Table below shows the postulated mechanism of formation of ethyl vinyl ketone from the linolenic acid portion of the fat component of soymilk:

Postulated Mechanism of Formation of Ethyl Vinyl Ketone in Soymilk.

```
CH3-CH2-CH = CH-CH2-CH = CH-CH2-CH = CH-(CH2)7-C-O-R
                 (0)  | Linolenic acid          ||
                      |                          O
CH3-CH2-CH = CH-CH2-*CH-CH = CH-CH = CH-(CH2) -C - OR
                 (0)  |                          ||
                      |                          O
CH3-CH2-CH = CH-CH2-CH - CH= CH - CH=CH-(CH2)7-C - OR
                      | OOH                      ||
                      |                          O
CH3-CH2-CH= CH-*CH2   |
                      |
CH3-CH2-CH- CH= CH2   |
                 (2)  |
CH3-CH2-CH = CH2      |
     OOH              |
CH3-CH2-C -CH= CH2    |
         ||           |
         O
```

ETHYL VINYL KETONE

The ethyl vinyl ketone is formed in six steps through free radical and peroxide intermediates and is catalysed by the enzyme lipoxidase.

The problem was, how to inactivate the lipoxidase before it caused flavour damage. Heating the milk immediately after grinding did not work because the lipoxidase acted so rapidly that the beany flavour was evident no matter how quickly the milk was heated. Heating the beans before grinding inactivated the lipoxidase and solved the flavour problem, but it also rendered the protein insoluble, thus giving almost no milk. After many trials the answer to the problem was found, and it proved to be a very simple solution. Instead of grinding the beans with water at ambient temperature, beans were ground with boiling water. This simple modification of a centuries-old technique inactivates the lipoxidase before it produces the bad flavour, and at the same time it brings the protein into solution before it is rendered insoluble by the heat.

The so-called "boiling water" grind produces a soymilk that is bland and pleasant tasting. The objectionable beany flavour is entirely missing. A pleasant odour and taste is present that resembles cooked cereals.

Only one volatile compound is present in detestable concentration in the milk. The compound is 1-octan-3-ol. It is formed in the intact beans during the initial soaking period. The flavour of 1-octen-3-ol is mildly pleasant. In fact it is one of the constituents of mushroom flavour.

Table below shows the procedure for making a sterilized soymilk in bottles and a loose milk to be dispensed from a container:

BOILING WATER PROCESS FOR SOYMILK:

1. Soak beans in cold water 5-10 hours. Discard soak water.
2. Preheat grinder
3. Grind cold beans with boiling water 9 parts water plus 2 parts soaked beans maximum slurry temperature 80°C.
4. Filter. Filter cake is used for animal food or human food.

	Bottled Soymilk.	Fresh Soymilk.
5.	Formulate (sugar, fat, minor nutrients)	Hold at boiling point for 30 to 60 minutes to destroy antitrypsin.
6.	Fill into bottles, seal.	Formulate (sugar flavouring)
7.	Sterilize. 12 mins. at 250°F.	Refrigerate.
	Shelf life: 6 months.	Shelf life: 1-5 days with refrigeration 8 hours without refrigeration.

Table below gives a "ball park" cost estimate for the ingredients of a 7 fluid oz. serving of soymilk. Other cost factors such as labour, fuel, overhead selling expenses will have to be added. The important thing is that for less than one cent ingredient cost, a substantial contribution can be made to the daily protein intake by means of a highly acceptable refreshing beverage.

INGREDIENT COST OF SOYMILK (estimated)

	U.S.$
1.0 kg. Soybeans at 20 cents/kg	0.200
0.65 kg. Sugar at 22 cents/kg	0.143
0.3 ml. Flavouring at $ 6.00/kg	0.002
Total ingredient cost ... $	0.345

Yield of soymilk: 50 x 200 ml servings per kg beans.

Ingredient cost per serving $\frac{0.345}{50}$ = 0.69 cents.

(feed value of filter cake has not been taken into account).

Table below shows the percent of daily protein intake supplied to various age groups by one seven fluid oz. serving of soymilk: Two standards of reference are listed. One is the FAO-WHO recommended daily protein intake. The other is the FAO-WHO-Interim Standard for

the Western Pacific which is about 20% lower than the FAO-WHO world standard. Using either scale it can be seen that one serving of soymilk can supply a significant proportion of the daily protein requirement to every age group. In the age group most susceptible to protein-calorie-malnutrition, the preschool child, a single serving of soymilk can supply as much as 50% of the recommended daily protein intake.

PROTEIN SUPPLIED BY SOYMILK

Type of Person	WHO-WESTERN Pacific Interim Standard for Daily Protein Intake		FAO-WHO Recommended Daily Protein Intake.	
	Standard grams	% of standard supplied by 7 fluid oz. Soymilk.	Standard grams.	% of Standard supplied by fluid oz Soymilk.
Toddler(1-3 years)	11.7	51	14.3	42
Preschool(4-6 years)	14.6	41	17.5	34
Schoolage(7-9 ")	18.4	33	24.9	24
Schoolage(10-12 ")	22.4	27	31.0	19
Schoolage(13-15 ")	32.8	18	41.1	15
Adult Male	39	15	46	13
Adult Female	35	17	39	15
Lactating Female	38.5	16	54	11

The milk that is made by the boiling water grind is bland in flavour, and acceptable to most people. It can be

formulated in many different ways in order to comply with regional taste preferences, traditions, or with special nutritional needs. The soymilk can be flavoured with chocolate, coconut, raspberry, caramel, and most other flavours. It can be fortified with extra fat, or with minerals and vitamins. The sugar content can be changed to suit the taste of any group. It can be used successfully to tone the high fat milk of water buffalo in order to reduce the fat content to that of cows milk without reducing the protein content. It lends itself to adaptation to almost any situation.

There is a great potential for soymilk in India. Now that the major off-flavour problem has been solved, all that is needed is to develop a flavour formulation that is highly acceptable to the Indian palate.

In short, we believe that the boiling water grind technique is an elegant example of how food technology can convert a cheap raw material into a highly acceptable food product thus bringing improved nutrition to the peoples of Southern Asia at low cost.

Cornell University Process.

Cornell University, New York State Agricultural Experiment Station, Geneva, New York 14456, are reported to have developed another process for the manufacture of Soymilk and a patent for the same is applied for. In this process, soybeans are cleaned and prepared in the normal way intended for edible products and the prepared flakes are extracted under carefully controlled conditions specially designed to avoid heat damage to the protein. A unique feature of this process is the use of two solvents in the extraction process, one of which is intended to eliminate those minor constituents which are responsible for the offensive flavour of the beans.

Details of the process cannot be revealed as the information is classified but the following extracts from a private communication from Dr. Keith H. Steinkraus, Professor Microbiology and Food Science, Cornell University, Geneva, may be of interest :

"As far as our process for the production of synthetic cow's milk is concerned, the first step-solvent extraction can be done easily in the equipment you have

designed for U.P.Agricultural University at Pant Nagar. Subsequent processing to an imitation cow's milk is done by aqueous extraction of the defatted powdered soybean flakes, followed by centrifuging to remove any insolubles, followed by incorporation of a suitable vegetable oil and flavouring, followed by homogenization, followed by bottling, followed by sterilization in the bottle if a product with a long shelf life is desired".

"Our most recent processing studies adapting the Cornell patent-applied-for process to processing conditions planned for U.P. Agricultural University have involved the use of batch extractions of soybean flakes where temperatures can be controlled better than they can by using a Soxhlet extractor in the laboratory. This is in line with plans Servotech has been working on for a solvent extraction plant for your University. By controlling temperatures, we have been able to increase overall aqueous solubility of the defatted soybean flour base from about 18% (Soxhlet extracted) to 53% (batch-temperature controlled extracted). The implication of this is that the milk base to which fat,

sugar, and milk flavours are added becomes much cheaper in cost, much more economical to produce so that, in fact, the aqueous, fat-free base can be diluted before addition of the fat, sugar, and milk flavour and still yield milk equivalent to cow's milk in protein content".

"In addition, our studies on milk flavours have prompted several companies to develop milk flavours for specific use in the soy base produced by the Cornell process. Our most recent milks are getting closer and closer to the specification - as similar to cow's milk as good quality margarine is to butter. General Foods Company has evaluated some of our most recent milks and described them as the blandest vegetable based milk substitutes they have tested. So I think that we have reason to have confidence that we will succeed in this joint venture. U.P.Agricultural University can very well be the first place in the world to demonstrate on a semi-commercial scale that simulated cow's milk or buffalo milk with flavours virtually indistinguishable from the animal milks and with similar nutritive values can be produced economically".

SOY PROTEIN CONCENTRATES & ISOLATES.

Soy Protein Concentrate.

In the manufacture of Soy Protein Concentrate, three basic processes are available. The processes differ in the techniques to ommobilise the major protein fraction during extraction of Oligosacharides, mineral matter and other components.

Water Leaching Process.

In the water leaching process at a pH value of 4.5, the lower molecular weight material is removed leaving the major Globulin fraction.

The defatted soybean flakes are treated in a stainless steel vessel fitted with slow moving agitator paddles with water. The entire mass is made into a good slurry at ambient temperature. After this operation the contents are acidified by a suitable mineral acid to a pH value of 4.5. At this stage the major protein is retained in the mass while most of the sugars and mineral matters pass into the extract. However, it may be noted that the "Whey" Proteins are soluble in water at a pH of 4.5 and these are lost in the aqueous extract. The remaining soybean flakes are further treated with food grade alkali to remove completely traces of acidity. The material is

filtered and dried.

Use of Aqueous Alcohol. In the processes investigated by Circle & Whitney, Mustakas, et al it was observed that using 60 to 80% Aqueous Alcohol aided the separationof the sugar fraction without removal of the "Whey" Protein as is the case with acidic water leaching. It was also claimed that the use of alcohol helped in enhancing the acceptability of the final product, in view of the fact that traces of bitter elements are also removed simultaneously.

The leached liquors of the above process contained the sugars, sucrose, stachyose, raffinose and some amount of verbascose. These liquors could be concentrated by evaporation to a syrup of Molasses-like consistency and colour. This syrup can be used in animal feeds.

A typical flow sheet following the Aqueous Alcohol Leaching Process and using hydrocyclones is presented in FLS:PCN:78 (at the end of the volume).

Yield and Characteristics. The yield of dry concentrate is approximately 60 to 70% of the weight defatted flakes.

The compositional characteristics of the concentrates are shown in the following Table :

AVERAGE COMPOSITION OF SOY PROTEIN CONCENTRATE OF THREE PROCESSES:

		Leaching with water pH 4.6.	Aqueous Alcohol Leaching.	Moist heat Denaturation.
Moisture %	..	6.7	5.2	3.1
Protein %	..	66.2	67.3	69.6
Protein, moisture free basis %	..	70.9	71.1	72.2
Fat	..	0.3	0.3	1.2
Crude Fibre %	..	3.5	3.4	4.4
Ash %	..	5.6	4.8	3.7
Nitrogen solubility index %	..	0.5	69.0	3.0
pH(1:10 aqueous dispersion) %	..	6.9	6.6	6.9

It may be seen that the protein contents on moisture free basis are above 70%. The concentrates obtained by alcohol and water washing have low protein solubility on account of denaturation. The product resulting from acid washing has decidedly higher protein solubility, when it is neutralised before drying.

The Polysaccharide Constituents of the concentrates include Arabinogalactan, Acidic Polysaccharides, some Galactomannan and celluloses.

The concentrates have generally better flavour characteristics than commercial soy flour. They are bland in taste and have colours ranging from cream to light tan.

The concentrates are used in cake mixtures and speciality breads. The characteristics of moisture absorption, juice holding and fat binding are useful in special foods such as comminuted meat products.

Soy Protein Isolates.

Notwithstanding extensive references to work done on Soy Protein Isolates, the information available is lacking in details of the exact process conditions. The high protein content and the ready dispersibility of the isolates have contributed to their growing popularity in recent years.

The general process is indicated in FLS:PIS:101 (at the end of the volume). While the principles of processing are

generally indicated, the design of equipment and processing technology continues to be trade secrets.

The conditions required for special selection and cleaning of the beans, sanitation in processing and microbial control are very important. The main raw material will be the defatted soy flakes which have undergone higher heat treatment. The flakes are fed into a stainless steel extraction vessel fitted with slow moving paddles and steam heating jacket. To this vessel water is added to make the contents into a slurry. After agitation for an hour, the contents are treated with alkali. The pH value will be maintained from neutrality to an alkaline pH.

The particle size, the liquid solids ratio, the pH, time and temperature are selected to achieve the best yields in the alkaline water phase in which most of the proteins dissolve rapidly leaving the fibrous residue. The aqueous extract is then separated in a filter and sometimes the fibrous residue is washed with alkaline water to obtain as much protein as possible. The protein liquid is then transferred to a second stainless steel vessel again fitted with slow moving paddles. It is treated with

mineral acids to a pH of 4.5. At this point the major globulin fraction of the protein precipitates. The slurry is filtered and the curd is concentrated. Most of the edible protein produced commercially is sold either in the neutral form or as sodium proteinate. This product is water dispersible. Consequently, it can be incorporated in wet food systems.

The isolated soy protein is generally spray dried. The resulting product is cream white in colour and has a low flavour intensity. This flavour has often been described as cooked cereal-like. The following table indicates the proximate analyses of several commercial isolates :

PROXIMATE ANALYSES OF COMPOSITION
SOY PROTEIN ISOLATES.

COMPOSITION	A.	B.	C.	D.
Moisture %	4.7	6.4	7.6	3.7
Protein %	92.8	92.2	92.9	94.7
Protein % (Moisture free basis)	97.4	98.7	100.0	98.4
Crude Fibre %	0.2	0.1	0.1	0.2
Ash %	3.8	3.5	2.0	2.7
Nitrogen solubility index %	85.0	95.0	-	-
pH(1:10 aqueous dispersion) %	7.1	6.8	5.2	5.5

It may be noted that all of them have high protein content and low fibre percentage. The percentage of Isolates C & D are of the Iso-Electric type. These are non dispersible type.

Yield and Uses.

It has been reported that about 30 to 40% of protein yields are obtained on the basis of the weight of the defatted soy flakes.

The Isolates have properties as emulsifying, emulsion stabilizing, fat-and-water-binding, of gelling, thickening, texture forming, etc.

Soy Protein Isolates are generally fortified with DL-Methionine for infant formulations. In the U.S. the Isolates are largely used in comminuted meat products wherein it enhances water absorption, juice holding, dispersing and fat emulsion stabilising characteristics. The impact of the Isolates on dairy products needs further development. This will be eminently suitable in India where the non-availability and non-consumption of animal proteins by the majority of the population needs a high quality protein like the Soy Protein.

The typically essential amino acid compositions of the protein concentrate and isolate are shown below :

AMINO ACID COMPOSITION OF SOY PROTEIN PRODUCTS:

Essential Amino Acids g./16 g.N.	Defatted Soy flour.	Soy Protein Concentrate.	Isolated Soy Protein.
Lysine	6.2	6.2	6.0
Methionine	1.3	1.3	1.1
Cystine	1.2	1.6	1.0
Tryptophan	1.4	1.4	1.3
Threonine	4.2	4.3	3.7
Isoleucine	4.6	4.9	4.8
Leucine	7.7	8.0	7.8
Phenylalanine	5.3	5.3	5.5
Valine	4.9	5.0	4.8

It may be observed that Soy Protein does show limitation in the sulphur amino acids, methionine and cystine. It is equally interesting to note that these limiting amino acids are lost in isolated soy protein. This is the result of protein fractionation. The protein efficiency ratio of commercial concentrates range between 2.29 and 2.36. When these concentrates were fortified with 0.15% of DL-Methionine, the PER value

range between 3.00 and 3.06. The figures for the isolated soy protein are 1.08-2.11 and in the fortified protein it ranges between 2.11 and 2.45. Obviously, some ingredients in the concentrates are nutritionally superior to the Isolates.

REFERENCES:

1) Production of Protein Foods and Concentrates from Oilseeds, Tropical Products Institute Report, June 1967 - Elizabeth ORR & David Adair.

2) Proceedings of the Conference on Protein-rich Food Products from Oilseeds held at New Orleans, Louisana, May 1968 - ARS page 2 - 71, May 1969 - U.S.D.A.

3) Bernett R.S. 1951 - Soybean Protein Food Products - Soybean and Soybean Products - Chapters 23-24 - K.S.Markley, Interscience Publishers.

4) Circle S.J. 1950 - Proteins and other Nitrogenous Constitutes, IBID - Mustakas G.C. - Albrecht W.J., Bookwalter G.N. and Griffin E.L. Jr. 1967 - Full Fat Soy Flour by a simple process for villages.

5) Mustakas G.C. and Griffin E.L., Jr. 1966 - Method of preparing edible soybean characterised by greatly enhanced water absorption.

6) SMIR L., 1959 - Protematious sugar composition and method of preparing soy protein concentrates and isolates.

SOYBEAN PROTEIN INDUSTRIAL PRODUCTS.*

Soybean protein is similar to casein and it has in fact been called vegetable casein. It is true that solutions of soybean protein, like casein, are ordinarily prepared in the alkaline pH range. However, soybean proteins having solubilities, viscosities, adhesive strengths, and other characteristics similar to casein are markedly modified products compared to the unisolated or native protein.

Soybean protein, in common with other globular proteins, is extremely sensitive to chemical or physical treatment and is readily altered by changes in temperature, pH, etc. This instability makes it difficult to control processes required for the isolation and modification of the native protein. It is, however, an advantage as well as a handicap because by carefully controlling conditions it is possible to produce "tailor-made" proteins which exhibit a wide range in behavior and proterties and, hence, adaptability to many uses.

Industrial Isolation and Modification processes. Most isolation and modification processes for soybean

* Extracts from Soybeans and Soybean Products, Interscience Publishers Inc., 1950.

protein have been designed to develop good solubility, high adhesive strength for binding the pigments in paper coatings or water-thinned paints, and viscosity characteristics similar to those of casein.

The first process for modifying soybean protein by means of alkali to impart to it more desirable characteristics was described in a patent by Cone and Brown. They treated 100 parts of ground press cake with 2000 parts of water and 10 parts of caustic soda and digested the mixture at 60°F for 24 hours. Digestion at 120°F shortened the time to about two hours. They stated that the digestion had a denaturing action on the protein and that its ultimate viscosity could be controlled, but warned that if the denaturing action is carried too far the adhesive properties may be impaired. To the clarified extract liquor they added lime to precipitate about 10-20% of lime-insoluble protein, which treatment was claimed to improve the color of the final protein product, and when used with lime-containing material, such as satin white, to prevent setting and thickening. As an alternative method, they extracted the protein with an alkaline salt solution, such

as sodium sulfite, and added 10 parts of lime to the dispersion in order to flocculate out the lime-insoluble fraction and to denature the soluble protein. By a third method they extracted and modified the protein in one step with 10% lime, on a flour basis, prior to its separation from the flour. These modified proteins were finally precipitated at pH 4.4 and 120°F. These conditions for precipitating the protein were claimed to improve the handling properties of the curd. They also mentioned that agglomeration of the precipitated protein is promoted by the addition of carbon disulfide. Cone and Brown reduced the moisture content of the curd to 65%, disintegrated it, and dried it at 90-100°F, after which it was ground to 40 mesh.

The ideas presented in the above patent are considered basic and, as stated by Wahlforss and Satosky, the principal advantage of the Cone and Brown patent lies in the fact that controlled uniform viscosity can be attained. They also pointed out that the rejection of the lime-insoluble protein by Cone and Brown lowered the over-all yield of protein to 20-25%, and they described a method which increased this to 32% by extracting and digesting

the flakes at 85°F for 14 hours with 3 parts of caustic soda and 7 parts of hydrated lime. They claimed that under these conditions a portion of the lime-insoluble protein is resolubilized.

The extraction of protein from soybean flakes with caustic alkali solution produces a slurry which is difficult to handle by screening and centrifugation; therefore, Julian and Malter recommended the use of water as the extraction medium. The slurry obtained with this medium was readily separated into a water extract and flake residue. This extract was then digested for 6 hours at 110°F with 2.5% each of caustic soda and lime, based on the protein content. The extract liquor was clarified by centrifugation during the period of digestion and the dissolved protein precipitated by adjusting the pH to 4.6-4.8. The protein curd was thickened in a thickener, washed by reslurrying and rethickening, filtered, dried, and ground. They obtained a yield of dry protein by this process of 24-26% based on the original weight of flakes.

Davidson described a method for determining the proper amount of alkali to use for extraction and digestion of

the protein from any given soybean meal. Several preliminary batches of protein are first made from the meal by extraction with varying amounts of alkali in the range of 3-8 parts of sodium hydroxide per 100 parts of meal. The viscosities of 10% solutions of the isolated proteins, adjusted to pH 10.0, are then plotted against the amount of alkali used to extract the proteins. From the plot of these data, it is possible to select the concentration of alkali required to obtain a curd which is easy to handle and a finished protein with the required adhesive or other characteristics.

Julian and Engstrom described a process for treating soybean flakes prior to extraction and modification with alkali in which sulfuric or hydrochloric acid is added to the aqueous slurry to obtain a pH of 4.7 at which value the slurry is held for 2 hours at 170-180°F. This digestion with hot acid insolubilizes part of the protein in alkali. Improvements in viscosity, color, and adhesive strength are claimed for the isolated and modified protein.

Lawrence and Hieronymus extracted the protein from soybean flakes at 45-65°C with a 0.3% triethanolamine solution and

modified the protein, after separation from the residue, by heating the solution to 60-70°C.

Henning discussed the difficulties of separating the extract liquor from the voluminous mucilaginous and gummy meal residue when soybean protein is extracted with caustic alkali. He claimed in his patent a process for settling and decanting the liquor which eliminated mechanical separation. In this process the flakes are first leached at the isoelectric point of the protein which is then extracted with caustic soda and lime in the presence of 1-5% sodium acetate. The improved settling of the insoluble flake residue was attributed to the action of the acetate ions.

Julian and Malter added sodium peroxide to an alkali extract of soybean protein to improve color, adhesive strength, viscosity, and tendency to gel. The improved flow properties of the isolated protein were claimed to be especially useful in the preparation of cold water paste paints.

Rauer and Torrington claimed that a free-filtering meal slurry is obtained by the addition of sodium hypochlorite.

According to this process the protein is extracted at 60°F with ten parts of a solution containing 0.3% sodium sulfite and 0.1% sodium hypochlorite. These inventors also claimed that the use of a mixture of 90% hydrochloric acid with 10% sulfuric acid produced a less gummy protein precipitate.

In a process described by Morse, 80-100 mesh soybean flour is leached at the isoelectric point of the protein to remove sugars, salts, and other soluble materials including coloring matter. Leaching is carried out at about 70°C for 40 minutes. It is claimed that under these conditions coloring matter, allied with and probably derived from glucosides, is hydrolyzed to yield pentosans and a water-soluble color-base.

Boyer et al patented a process in which soybean protein curd is dehydrated by slow-freezing. On thawing, the protein settles out and the curd is readily washed. They claim that the slow-freezing denatures the protein, thus making it suitable for spinning fibres and for paper coating and cold-water paints.

Other processing conditions have been proposed but the

present practice in this country is, in general, covered by the various patents discussed above.

Industrial adhesives and emulsifying products.

Soybean flour is the basis of important industrial adhesives and emulsifying products. Its most important use, from a tonnage standpoint, is in the manufacture of water-resistant plywood. Considerable amounts are also used as an adhesive in the manufacture of washable wall-paper. It is not entirely suitable as the sole adhesive in the coating of magazine, book, art, and lithograph papers, but it is extensively used in mixtures with casein in which the soybean flour content amounts to 20-30% of the total adhesive. In operations where a specific degree of tackiness is required, such as in tube winding, it can be used provided about 1 part of isolated soybean protein or casein is added to every 4 parts of flour. Soybean flour has been extensively employed as an adhesive and emulsifying agent for orchard sprays and as a binder for water-thinned paints prepared for interior decoration.

In addition to its use as a paper-coating adhesive, isolated soybean protein is used to varying degrees in water-thinned paints, in the spinning of synthetic protein

fibres, as a protective colloid in the manufacture of rubber products, in leather finishing, as a fire foam stabilizer, in plastics to improve flow properties, as paper and textile sizing agents, and in other applications. For a list of actual and potential uses which have been suggested, the reader is referred to a resume and bibliography of soybean protein by Brother, Smith, and Circle.

The preservatives most frequently used in adhesives are the chlorinated and/or phenylated phenols. These materials will preserve protein adhesives successfully provided they are used in sufficient amounts; ordinarily, 4-5%, based on the dry weight of the adhesive, is sufficient, provided gross contamination with bacteria from unclean equipment is avoided.

One of the most effective preservatives is the sodium salt of pentachlorophenol, which is marketed under the trade names Santobrite and Dowicide G. Another effective preservative commonly used is the sodium salt of chloro-2-phenylphenol, which is marketed under the trade name of Dowicide C. When either of these two preservatives is used, there are occasional complaints of dermatitis among the

workers handling them or mixtures containing them. The preservative least apt to cause dermatitis is the sodium salt of o-phenylphenol or Dowicide A, which is often preferred to the other aforementioned phenols.

Plywood Glues. The first large-scale industrial use of soybean flour was the development of plywood glue in the Pacific Northwest about 20 years ago by I.F. Laucks and Glenn Davidson, who imported specially prepared hydraulic-pressed soybean meal from Manchuria. In the preparation of this meal, special precautions were taken to avoid overheating in order to keep protein insolubilization to a minimum.

Besides being relatively cheap and plentiful, soybean flour adhesives produce a strong bind which, although not waterproof, is highly water-resistant. Because the adhesive mixtures are not tacky, the glued veneer is easy to handle, and therefore the manufacturing process can be speeded up considerably. Another advantage occurs from the fact that veneers containing 20-35% of moisture can be successfully glued, thus reducing considerably the losses resulting from splitting. In addition to its extensive use in the manufacture of water-resistant Douglas fir ply-

wood, large amounts of soybean flour plywood adhesive are also used for making box-shooks in the Eastern and Southern States, water-resistant plywood boxes being especially useful for packaging goods for export. Soybean flour glues, in common with casein glues, have been unable to make any great progress in the fields where thin veneers are used because the alkali in the glue discolors the wood.

The following formula is typical for a soy flour plywood glue: soybean flour, 100 lbs.; water, 390 lbs.; hydrated lime, 3 lbs.; caustic soda, 7 lbs.; silicate of soda(Philadelphia Quartz "N" brand or equivalent), 15 lbs.; and carbon tetrasulfide (equal parts CS_2 and CCl_4), 1 qt.

Soybean flour is also used extensively in blends with other adhesive bases. For example, soluble dried blood is added to increase water resistance, especially for use in hot-press methods. Mixtures of soybean flour and casein have lower water requirements and increased water resistance.

Another development which has contributed to the continued large-scale use of soybean flour glues is the success of hot-press soybean glues. According to Laucks, the soybean

glues, as finally formulated, were found to have a great advantage as compared to other types of glues in the hot-press. They were found to be much speedier than other glues and speed is the essence of the hot-press method. The hot-press development also led to the so-called "mastic" type of glues. This type of glue is spread at a much heavier consistency than has previously been thought possible and quite different mixing and spreading equipment had to be devised. With mastic glues an exceptionally uniform and high quality product is obtained with mass production economy. The fortification of soybean flour with spray-dried blood has also contributed to the increased use of hot-press protein glues.

Soybean Flour Paper-Coating Adhesives.

Soybean flour is an important coating adhesive. When prepared for this purpose its particle size should be smaller than that ordinarily required for plywood glues, water-thinned paints, etc. For best results, 98% of the flour should pass a 300-mesh screen.

Dilute alkaline dispersions of soybean flour have a low viscosity, but as the concentration approaches one part of flour to give parts of water the dispersion develops

considerable body although it will still flow well at room temperatures. At concentrations above 16.5%, however, the viscosity increases rapidly, resulting in poor flow and eventual gelation. One of the most useful properties of soybean flour dispersions is their thixotropic behavior when they are allowed to stand without stirring. This thickening effect is valuable in keeping pigments and clays in suspension because, on agitation, the viscosity drops sharply and the mixture regains its desirable flow properties. However, thixotropic behavior may result in brush marks on the coated paper unless mechanical adjustments can be made in the available brushing equipment.

The best results are obtained when at least 4 parts of caustic soda are used per 100 parts of soybean flour, which gives a dispersion having a pH of about 11.0 - 12.0. The pH and viscosity will remain relatively stable for long periods of time provided bacterial and mold spoilage is prevented by the use of sufficient preservative.

About 4 parts of pine oil (defoamer) and 400-450 parts of water at 75-100°F are placed in a mixer. The mixer is started, 100 parts of soybean flour are slowly added, and,

after a smooth paste is obtained, 40-50 parts of 10% sodium hydroxide solution are added. Mixing is continued from the time the flour is added until 30minutes after the solution is made alkaline with the caustic soda solution. A solution of preservative is added, and the final concentration of the dispersion is adjusted with water to the desired viscosity. The product is now ready for mixing with the clay or pigment slip.

Bain et al have reported that a slight increase in adhesive strength of coated paper is obtained if the adhesive solution containing soybean flour is heated for one hour at 140°F in the range of 2-5% caustic soda. Heating at temperatures above 135-140°F with caustic soda darkens the mixture.

Bleaching of soybean flour dispersions to obtain lighter colored coatings is sometimes desirable. This can be accomplished by the addition of 1-2% of sodium hydrosulfite, based on the weight of the flour, to the dispersion after the caustic soda is added. The reagent also reduces the viscosity of the dispersion and its use is often recommended for this purpose. The addition of

sodium or zinc hydrosulfite to bleach the pigments associated with soybean protein has been discussed by Smith and Max.

Water resistance and a high degree of washability can be imparted to soybean flour coatings by the application of a "converting" or tanning agent after the paper is coated and partially dried. The tanning solution is applied, usually with roller applicators, after the coated paper has passed through the dryers. A typical formula for a converting solution is alum (iron-free), 14 lbs.; water, 85 lbs.; and formaldehyde, 1 lb.

This flour is not only used as an adhesive in the ground coating applied to the paper, but it is also used to prepare the water-base inks employed in printing the decorative designs on wallpaper. While many manufacturers add small quantities of casein or isolated soybean protein to the flour adhesive mixture, it is possible to make a high grade washable wallpaper using only soybean flour. As high or even a higher degree of washability is obtained with soybean flour as with isolated protein or casein, by the use of tanning solutions similar to the one given above.

Soybean Protein Paper-Coating Adhesives.

It is noteworthy that the largest single use of casein and soybean protein is in paper coatings. The average 1940-1946 consumption of casein in the United States was about 65 million pounds and of soybean protein about 15 million pounds, approximately one-half of each amount being consumed in paper coatings.

Machine coating of paper and the development and use of isolated soybean protein as a coating adhesive became commercially important in the United States during the decade 1935-1944.

Bain et al have stated that the amounts of various alkalis ordinarily required to bring about the solubility of commercial soybean protein in water are soda ash 10%, ammonia (26°Be) 10%, caustic soda 3.5%, and borax, 17%. These amounts are based on the dry weight of the protein. The coating mills, however, commonly use more alkali, as shown in the following typical directions for preparing adhesive for use in coating paper stock.

Stir 100 parts of protein into 450 parts of water. Continue to agitate moderately and allow mixture to soak

15 minutes. Then add 2 parts of ammonia (26°Be) with continued agitation. Next add 10 parts of soda ash (previously dissolved in 50 parts of water), and raise the temperature to 130°F. Continue to stir batch for one hour or until solution of the protein is complete. The adhesive solution is then ready for addition to the pigment or clay slip to make the coating color.

Coated papers can be made water resistant by the addition of 3-5% of technical grade formaldehyde to the coating colors based on the weight of the soybean protein. When formaldehyde is used, alkalis such as borax or ammonia should be added to dissolve the protein. For maximum water resistance, it is generally advisable to keep the pH of the color between 7 and 8. It is also considered advisable to dilute the formaldehyde with water prior to use. It has been found that better water resistance is obtained if the formaldehyde is added to the color just prior to use and if the color is used as soon as possible.

Paper and Textile Sizes.

Soybean protein is an important sizing material in the manufacture of paper, and it is also used as a textile size. Practically all grades of paper, with the exception

of blotting, towelling, filter, and other similar types, are sized in the process of manufacture to make them resistant to the penetration of liquids and moisture. Writing paper, for example, is sized to resist the penetration of ink, just as food wrapping paper is sized to resist the penetration of water, meat juices, etc.

The usual method of sizing is designated as beater or engine sizing. It consists simply of adding a sizing material to pulp while it is beaten in such a way that the material adheres to the pulp fibres in the fabrication of the sheet on the paper-making machine. Ordinarily, a rosin emulsion prepared by cooking and saponifying rosin with soda ash is added to the pulp in the beater charge. The rosin present in the emulsion is precipitated on the fibres by the addition of papermaker's alum. Many difficulties develop in the manufacture of uniformly sized paper, which users of this type of rosin size have never been able to overcome. Among the variable factors affecting the operation are kind of pulp, action of the beater, heat, hardness of the water used, and speed of paper-forming machine. Furthermore, the use of excessive amounts of rosin or alum, or both, causes the resulting

paper to deteriorate unduly with age.

A method of sizing has been patented by Rowland which is said to overcome most of the difficulties of ordinary "engine sizing". This development is the basis of the "Prosize" process in which soybean protein is used. The improved sizing material is prepared by adding soybean protein to a 2.5% solution of sodium resinate containing a slight excess of free rosin but no alum. The amount of protein added, according to the patent, may vary from 10-50% based on weight of dry sodium resinate. The mixture is stirred and the protein combines with any free alkali present and with some of the alkali in the rosin size. Boric acid is then added in a quantity to form a large amount of finely divided rosin particles, which, in turn, are stabilized by the protein. The theoretical basis of this development has been discussed by Rowland and Bain, who claim the process reduces rosin requirements 35-65%, and alum requirements 20-45%.

Warren has claimed that soybean protein is superior to casein for surface sizing an alkaline-filled (calcium carbonate or the like) uncoated paper.

Sanford has reported that acetate rayon weavers have found soybean protein offers certain advantages over standard gelatin and casein sizes. Probably the principal advantage is that slash-cylinder temperatures are not as critical with soybean protein as with the other sizes. Tests have shown that it is virtually impossible to bake or overheat the size within the normal range of temperatures generally attainable on slashers. It has been found that there is little or no danger of causing the size to deteriorate or become insoluble. According to Sanford, one of the principal problems in slashing acetate yarns has been that of penetration. Test runs and cross sectional photomicrographs have shown that one of the advantages of soybean protein size is its ability to penetrate acetate yarn.

Water-Thinned Paints.

Soybean protein is used in all types of water-thinned paints and in many instances soybean flour is equally effective. Soybean protein is used as the adhesive, film-forming and waterproofing agent in paste and powder cold-water paints. In resin-oil emulsion paints, soybean protein and flour aid in the dispersal of the resin-oil phase and stabilization of the emulsion.

Water paste paints are based on casein or soybean protein dispersed by alkali or borax under controlled conditions and modified with drying oils or other water-insoluble film components. These paints are usually more durable than the cold-water powder paints.

However, in some types of paint soybean protein has certain advantages. For example, the thickening action of calcium-base pigments in a casein paint results from the formation of the sparingly soluble calcium caseinate; therefore, a protective colloid such as soybean protein, which has been processed to remove lime-insoluble materials, is preferred. It is also claimed that soybean protein does not have the stringy, sticky characteristics peculiar to casein when used in water-thinned paints and that its use improves brushability and makes the paint film more washable. The reader is referred to Mattiello and others for a detailed discussion of the formulation and manufacture of water-thinned paints.

<u>Plastics</u>. It was found that reducing the water content of soybean meal or protein below about 5% gave a base material from which a type of plastic could be made having properties

more closely resembling zein than casein plastics. Brother and McKinney found that soybean protein, hardened or tanned at a pH of 4.1, produced a material that was thermoplastic and of minimum water absorption, the water absorption of this material in 24 hours being about 10%. The formaldehyde-hardened protein, although thermoplastic, required 10% or more water content and rather high molding pressures. These same authors later reported that a formaldehyde-hardened protein powder could be prepared with a moisture content of 5% or less and plasticized with ethylene glycol, glycerol, or the like. Brother et al considered none of these plasticizers entirely satisfactory, although they did permit the protein plastic to come finished from the die. They stated that formaldehyde-hardened soybean protein is thermoplastic, and must be chilled in the die under pressure before removal, yet it does not flow readily enough to allow molding injection dies. To be of commercial importance it must be made to work in injectors or be rendered sufficiently thermosetting to allow removal from hot dies.

The high water absorbent properties of soybean meal

result from the presence of protein and of other soluble materials such as sugars and salts. In order to minimize the influence of the soluble constituents of soybean meal, the soluble nonprotein components were removed by leaching at the isoelectric point of the protein. This step was followed by a heat treatment to denature or insolubilize the protein in the meal. The denaturation procedure was carried out by adjusting the moisture content of the meal to about 20% and heating under pressure at a temperature of 225-250°F for two or three hours. Also of interest in this connection is the work of Beckel, Bull, and Hopper on the influence of heat and moisture on the progressive insolubilization of the protein in soybean meal.

The residual insoluble meal that remains after the extraction of the protein can be used in place of the leached meal. It is relatively free of water-soluble sugars and salts and may contain 35-50% of protein. This by-product, resulting from the industrial isolation of soybean protein, can be added to the phenolic resin if it is first heat-denatured, and its use in plastics is more practical than the leached meal.

Leached, denatured soybean meal can be used to replace as much as 5-10% of the more expensive phenol formaldehyde resins without altering appreciably the curing time and strength of the final plastic. Since the meal contains only about 50% protein and the remainder is inert non-plastic material, 10% of the meal must be used to replace 5% of resin and 5% of wood flour. When soybean meal is used to replace wood flour, a strikingly large increase is noted in the plastic flow of the molding powder and a free flowing molding powder may be produced by using 50% resin, 40% wood flour, and 10% treated meal or protein residue. Such free-flowing molding powders are usually made by using 60% resin and 40% wood flour. Since the introduction into the molding industry of electronic preheating equipment, molding powder or preforms are usually preheated before molding.

Better flow characteristics than are found in other high impact plastics are claimed for this product which contains chopped tire cord or macerated cloth as a filler. About 90% of this material is being sold in preformed disks, cubes, rectangles, and other standard shapes. The preforms are cut from sheeted stock instead of being pre-

pared by forming presses. It is claimed that the exceptional flow properties of these compounds makes it possible to obtain molded pieces free of resin segregation using molding temperatures and pressures lower than those required to mold conventional impact compounds.

Textile Fibres. Boyer has recommended the use of a weakly alkaline solvent, such as 0.1% sodium sulfite solution, to extract the protein and has indicated that the simpler methods are the most satisfactory. The resulting protein extract is clarified and the protein precipitated with acid. Another important point, seldom mentioned, has been emphasized by Boyer et al, namely, that the precipitated protein must be thoroughly washed to eliminate undesirable soluble salts and excess acids. The protein curd is finally dewatered and dried prior to use in preparing the fiber-spinning solution.

The spinning solution is ordinarily prepared by dissolving the protein in caustic soda at a high pH to produce a stringy, viscous solution. Cline, for example, has described the use of an 10% solution of protein having a pH of 12.5 and Wormell et al a 15% solution of protein dissolved in a 1.4% caustic soda solution as a suitable spinning medium.

Because of the tendency of soybean protein to form gels at high concentrations, it is difficult to prepare solutions having more than 12% of solids. The reader is again referred to viscosity Curves I which emphasize the necessity for using low concentrations of unmodified protein to prepare solutions that will not gel. Soybean protein solutions prepared at pH values near neutrality will either fail to form fibres in the coagulating bath or will form fibres too weak to handle.

The final step in the manufacture of protein fibres is the extrusion of the protein solution through spinerettes into the acid-coagulating bath and collecting the filaments on a reel, bobbin, or in a spinning pot. Although many variations in precipitating baths are possible, they usually consist of sulfuric acid, formaldehyde, and a salt such as sodium chloride or aluminium sulfate to facilitate dehydration of the filaments. Stretching during and after coagulation to orient the fibres is important and the filaments are pulled through the acid bath and over "Godet wheels." Cline has emphasized the importance of stretching the filaments in the coagulating bath followed by further stretching in a hot salt bath to orient soybean and other protein fibres.

The after-treatment of the fiber involves a relatively long immersion of the fiber in a formaldehyde bath to set it completely, cutting it into the desired staple length, and drying it under controlled humidity and temperature conditions.

Fire-Foam Stabilizers.

During World War II, the greater part of the isolated soybean protein produced was hydrolyzed and used by the U.S. Navy to prepare a foam for fighting oil and gasoline fires on war ships. A soybean protein solution was fed into a water stream and the mixture converted into a foam by means of an aerating nozzle.

Ratzer described a process for the controlled hydrolysis of soybean and other proteins with lime to produce a hydrolyzate having 25-50% of the nitrogenous constituents in the form of peptones. Neutral aqueous solutions containing 1% of the hydrolytic products are recommended for producing air-foam for fire extinguishing purposes.

Tacky and Remoistening Adhesives.

There is also a large adhesive field in which a dried glue coating must develop adhesive properties and form a bond when it is moistened with water. Such adhesives are called "remoistening" or gumming adhesives.

Burnett et al have shown that, under certain conditions, soybean and peanut proteins can be used in the preparation of tacky and remoisting types of adhesives. For this purpose they used a protein that had not been subjected to modification but was prepared under conditions similar to those previously described in the isolation of protein for fiber spinning. The isolated proteins are used in the form of hydrates. The protein hydrates are capable of binding increasing amounts of water, from about 30-70% by weight of the gel, as the pH value of the system is increased from 4.5-9.0. The presence of water in excess of that bound by the protein results in disintegration of the protein-water system. The protein hydrates are tacky and at pH values near neutrality have viscosity characteristics that make them suitable for use as adhesives. Gummed tape prepared from peanut protein hydrates has relatively good adhesive strength. Similar data for soybean protein is not available.

It is too early to evaluate this development fully, but it is potentially important because it opens an entirely new field for which vegetable proteins have not heretofore been considered suitable.

Printing Inks. Schmutzler and Othmer investigated the utility of soybean protein dispersions as vehicles for the type of printing ink which is caused to set to a hard film by precipitation.

A suitable dispersion was made up of 130 parts of soybean protein, 48 parts of guanidine carbonate as the dispersing agent, and 592 parts of diethylene glycol. Satisfactory printing inks which were hardened by exposure to steam were made with this dispersion but the water resistance of the prints was poor. This defect was attributed to the high alkalinity of the dispersion containing the large amount of guanidine carbonate.

The best results were obtained when the protein was allowed to react with paraformaldehyde in the presence of catalysts, such as aluminium chloride and zinc nitrate, and of protein-precipitating reagents, such as phenyl isothiocyanate and phenolic resins. The characteristic properties of these dispersions indicate that such products may be useful in other fields.

Miscellaneous Uses. In the rubber industry, soybean protein is used as a stabilizer of latex emulsions.

Soybean flour is used as a core binder. For example, Lane has described the preparation of a foundry core made from core sand, unextracted (i.e., full-fat) soybean flour and gasoline-insoluble pine wood resin.

Soybean flour is used extensively in the manufacture of agricultural sprays. It aids in dispersing the active ingredients during mixing and keeps them suspended while the spray mixture is being applied. Soybean flour gives excellent wetting qualities to the spray mixture and assures even, effective coverage with a minimum of waste caused by run-off from sprayed surfaces. It binds or sticks the active ingredients firmly to the leaf surfaces, this minimizing removal by rain, yet it permits easy removal of spray residues during washing operations. The flour must be ground sufficiently fine to avoid clogging the spray nozzles. For the preparation of orchard sprays, Eddy has described a stock 83% oil emulsion which contains 10% of what he calls a soybean gel. The soybean gel is prepared by cooking one part of the soybean meal with about 150 parts of water, after which about 10% caustic potash, based on the weight of the meal, is added with constant stirring. The stock oil emulsion is diluted to 2% for use as a spray.

The linoleum industry uses both soybean flour and isolated protein in the preparation of backing primers for asphalt-coated felt. Soybean protein is also used as an emulsifying agent for oils in felt base floor covering manufacture. Because of its sealing properties, it makes an ideal emulsion primer sealer over asphalt felt before processing oils are applied to finish the product.

The high tolerance of soybean protein for formaldehyde makes it a desirable ingredient of leather finishes where water resistance is required.

The use of soybean flour in the preparation of asphalt emulsions has been patented by Banks et al and Taylor. The patent of the latter suggests the use of such emulsions for highway building, as a paint, waterproofing material, flooring material, etc.

DEGUMMING AND GUMS RECOVERY.

Fats and oils obtained either by expeller process or from solvent extraction contain a variety of non-glyceride constituents. The constituents depend upon the source of raw material, method of extraction, manner of storage, etc. The non-glyceride components comprise generally of phosphatides, carbohydrates, sterols, etc. Not all the constituents are undesirable; for instance, sterols like Tocopherols are helpful in the prevention of oxidation of unsaturated constituents of vegetable oils. They act as anti-oxidants.

Phosphatides are basically associated with fats and oils in many plant tissues. They consist of a poly-hydric alcohol such as Glycerol or Lipositols esterified with fatty acids and also with phosphoric acid. The phosphoric acid is in turn combined with a nitrogen compound. The common phosphatides are Lecithin and Cephalin and in those phosphatides one fatty acid radical is replaced with phosphoric acid. In Cephalin, phosphoric acid is esterified with Hydroxy Ethyl Amine or colamine. In

Lipositol the alcohol component is not Glycerol but Inositol. This is how it is esterified with fatty acids, phosphoric acid, Galactose and other substances.

Scholfield et al have reported that soybean oil phosphatides consist of approximately 29% Lecithin, 31% Cephalin and 40% Inositol. The Lecithins are generally acetone alcohol soluble and the remaining Cephalin and Inositol phosphatides are insoluble.

The lipids consist of two groups, viz. the phosphatides and the cerebrodises; the former group contains the lecithins, cephalins and sphingomyelins and the latter group, the phrenosins and kerasins. The lecithins and cephalins contain nitrogen and phosphorous in the ratio of 1:1. The cerebrodises contain nitrogen but no phosphorous and contain a carbohydrate group. According to Kaufmann, crude soybean oil contains about 1.0% phosphatides and sometimes as much as 3.2%. Lecithins and cephalins can be separated from the fatty acid glycerides by their insolubility in acetone in which fatty acid glycerides are soluble. The cephalins are sparingly

soluble in ethanol while the lecithins are more soluble. (Maclean and Maclean, Spiegel-Adolf, Winterstein and Winterstein, Grun, Bull, Working and Andrews, Bloor, Markley and Goss, and Stanley).

Lecithins contain one molecule of phosphoric acid. One of the hydroxyl groups of the phosphoric acid molecule is in turn esterified with a molecule of choline $HOCH_2CH_2N(CH_3)_3OH$. They exist in alpha and beta forms. The alpha form is optically active as the central carbon atom is asymmetric. Cephalin differs from Lecithin in containing a colamine group or hydroxyethylamine $HOCH_2CH_2(NH)_2$, which is attached at the hydroxyl group of the phosphoric acid. Woolley isolated an inositol phosphatide which he named lipositol, which led Folch to conclude that cephalin is a mixture of inositol, phosphatidyl-serine and a more unsaturated compound which contains no amino acids.

The fatty acids of Phosphatides appear to be many. Webster reported iodine values of mixed fatty acids of the acetone insoluble phosphatides as 92.5 indicating the

presence of more unsaturated acids than oleic. Suzuki, Yokohama isolated a series of lecithins as bromides yielding palmitolinoleo-a-lecithin, oleolinoleo-a-lecithin, and dioleo-a-lecithin, etc. Belozerskii and Kornov identified linoleic and linolenic acid phosphatides in greater quantities in the cotyledon lecithin than in the embryo lecithin.

Hilditch and Pedelty examined the fatty acid constituents of the phosphatides and observed that "the range of fatty acids in the phosphatides is qualitatively the same as that in the corresponding glycerides, but the proportions of the component acids vary widely as between the two types of seed lipids. They noted the consistent occurrence of 3 to 6% of highly unsaturated acids of the C-20 and C-22 series which are not present in the glycerides of these oils, and also that the phosphatides contained larger percentages of saturated acids than were found in the glycerides. They also noted the presence of appreciable amounts of highly unsaturated acids of higher molecular weight than C-18, the presence of which appears to be characteristic of all natural phosphatides and

pointed that linoleic acid is the most characteristic acid of seed phosphatides.

The chemistry of phosphatides of the soybean needs much more investigation. The number and nature of the phosphatides are unknown. The ratio of these components to one another or of the variability of this ratio in different soybean oils needs investigation. They are not completely removed by the known processes. Daubert observes that "based on the high percentage of linoleic acid in soybean phosphatides and the fact that only two fatty acid groups are present in a given ester, there should be a possibility of isolating dilinoleo-substituted phosphatidic esters.

The Process (Vide FLS/DGM/07).

Crude soybean oil received from the extraction plant is stored in day tank (300). The oil is homogenised in the tank by means of a slow speed paddle agitator. After uniform mixing, the oil is pumped into a Reactor (302) where the temperature is raised to about 60°C. This oil is pumped through a cartridge type automatic filter (301), the leaves of which are earlier pre-coated with filter

aids (303). Any suspended impurities are thus separated. The clean oil is then stored in a second surge tank (304). The oil is then pumped through a metering device into a mixing unit where pure distilled water, free from calcium contamination, is pumped again through a metering device. On some occasions reagents such as small quantities of Hydrogen Peroxide or Acetic Anhydride are also metered into this mixing unit. From the mixing unit the mixture of oil, water and reagents pass through a second heat exchanger (308) where the temperature is further raised to about 70°C. The mixture is then passed through retention tanks (309) where the dissolved gums in water and the degummed oil undergo gentle 'break'. From these retention tanks the mixture is pumped into a Centrifuge (310) where the oil is separated from the hydrated mixture of gums. At this stage the gums are still in dilute solution and it will be necessary to further treat this solution with bleaching reagents to reduce the colour. From the Wet Gums Tank (315) the slurry is pumped into a Flash Drier (316) which is under high vacuum. Substantial amount of water is removed in this operation and gums containing 20 to 25% of water are pumped into Product Holding

Tanks (317). At this stage the Lecithin is in preponderant quantity. This Lecithin is used to fortify Soyflour intended to be used as high protein product. The separated oil from the Centrifuge (310) is collected in Surge Tank (314). The oil is pumped into a Heater(312), into a Flash Drier (311) to remove all the water and make the oil dry. The dried oil is then pumped through a Cooler (313) and pumped into Degummed Oil Storage Tank.

For the production of soy-lecithin with 65% phosphatide content (Acetone insoluble) and 1% moisture free oil containing 2% phosphatides and with the addition of 5% fatty acids to ensure fluid consistency, approximately 20 Kgs of commercial lecithin product is obtained from approximately 5½ Tons of crude oil. It is important to note that fatty acids are necessary to make dehydrated lecithin and assume fluid consistency for better handling (Podbielniac). (Reference: JAOCS, March 1957).

In a paper on the degumming step Myers observed that in normal degumming processes not more than 90% of lecithin could be removed as water degumming step will not completely hydrate lecithin. In the normal processes, the

remaining lecithin has always been removed in the subsequent alkali refining step along with the free fatty acids. Hayes & Wolff (JAOCS, Vol.33, 1956) discovered that adding about 0.1% of Acetic Anhydride in the crude oil before degumming would help the lecithin to 'break'. The subsequent addition of degumming water would cause all Lecithin to hydrate. This could be removed in subsequent centrifugal separation. It was observed that approximately 66 to 68% acetone insoluble Lecithin was obtained. The yields reported were quite interesting and relationships have been established between the degumming process and deodorisation losses. It was found that the deodorisation losses showed a gain of 0.08% after the total degumming step.

Further work on this degumming operation shows that with 3.5 gallon per minute flow rate, the product obtained was containing about 70% acetone insoluble (dry basis) and the degummed oil is as low as 0.11% Gardner 'break'. At a throughput of 2 GPM results superior to previous centrifuge operations were obtained with water treatment considerably below the normal figure of 1.6%. (Reference: JAOCS, June 1956. Podbielniac et al).

The commercial lecithins are of six common grades. These are: plastic-consistency unbleached, single-bleached and double-bleached lecithins and the fluid-consistency unbleached, single-bleached and double-bleached lecithins. Lecithin with a high fatty acid content was always fluid or pourable. Fluid consistency lecithin is made by adding 2 to 5% fatty acids to plastic consistency lecithin. The oil-free lecithins are made by extracting the soybean oil with acetone, and drying the residue under vacuum. The light brown granules keep well. They emulsify easily even in cold water to form highly dispersed and translucent emulsions. Completely oil-free phosphatides will oxidise discolour and become unemulsifiable and insoluble quickly on exposure to air.

Commercial lecithin is brown to light yellow in colour. It has no odour and has a bland taste. It is soluble in aliphatic and aromatic hydrocarbons. Like other antipolar surface-active agents the phosphatides are insoluble in polar solvents like ketones, particularly acetone. It is insoluble in water. Heated above 100°C it gradually oxidises, darkens and decomposes.

In hot water, slightly alkalized to a pH above 8, the emulsification of lecithin is readily accomplished. The emulsions are used in the textile, tanning, and cosmetic industries. They are subject to microbial attack and may be preserved by addition of hydrogen peroxide, benzoic acid, hexamethylenetetramine, etc. By using a suitable synthetic detergent, lecithin emulsions may be prevented from precipitating. As its constituent fatty acid-containing phosphatides are antipolar presenting the strongly lipophilic fat-forming fatty acid nuclei at one end of the molecule, and the strongly hydrophilic amino or phosphoric acid nuclei at the opposite end, soybean lecithin is a wetting agent. It is an edible interfacial active agent in the food industries. The hydrophilic and lipophilic groups in each molecule are balanced, and hence it is an excellent wetting agent even in oil systems, such as chocolates, paints, printing inks, etc. Obviously commercial lecithin has the structural aspects of an anionic interface modifier.

Lecithin may be saponified readily by boiling with aqueous bases. Acid hydrolysis produces free fatty acids to yield

a stearine like solid. It cannot be sulfonated easily. By conservating water-soluble dyes they may be made oil soluble.

APPROXIMATE CHEMICAL COMPOSITION OF SOY LECITHIN.

(Soybeans and Soybean products .. K.S. Markley)

Constituent:	Per cent.
Phosphatidylcholine	21
Phosphatidylethanolamine	8
Phosphoinositides, lipositol, etc.	20
Phosphatides, others	11
Soybean oil	33
Sterols, tocopherols, etc.	2
Carbohydrates, free	5
Total ...	100

Uses

Soybean lecithin should be edible, wholesome and hygienic for food industry.

Added to Margarine in small percentages, it causes an absorption ofmoisture and prevents "bleeding". It counteracts spattering during frying. In chocolates, it has an excellent wetting action. At 1% addition to oil, it causes a rapid emulsification of the oil and syrup during cooking resulting in smoother, richer and non-sticky product. In ice cream, it functions as an

emulsifier like egg yolk or glyceryl monostearate. It represses crystallisation of lactose in ice cream containing high serum solids and produces a smooth product. In pharmaceutical products it is used as a source of choline and inositol. In cosmetics, it is used for its emulsifying, emollient, penetrative and absorptive properties. It improves the stability of lather in soaps. In paint products it is a dispersing agent and improves their levelling and brushing qualities. In rubbers, it increases its tearing strength and acts as an anti-oxidant.

REFERENCES:

Soybeans and Soybean Products - K.S.Markley.

Soybean Chemistry and Technology - Markley & Goss.

J.Eichberg, Chemurgic Digest 6, 109-111, 1947.

J.Stanley and J.Fernandes.

J.Maclean and I.S.Maclean, Lecithin and Allied Substances.

E.Klenk and R.Sakai Z.Physiol.Chem.258, 33-38, 1949.

Susuki and Yokoyama, Proc.Imp.Acad.Tokyo 6, 341-344,1930.

D.W.Woolley, J.Biol.Chem.136, 113-118, 1940.

Folch J. Federation Proc.6,252, 1947.

J.E.Carter, W.P.Norris, F.J.Glick, G.E.Phillips and R.Harris, J.Biol.Chem.170, 269-283, 1947, 285-294, 295-299.

T.P.Hilditch and W.H.Pedelty, Biochem.J.31,1964-1972(1937).

PROCESSING SOYBEAN OIL INTO HIGH QUALITY EDIBLE PRODUCTS *

Introduction The problem of the flavour stability of soybean oil has been given wide publicity by many investigators. Soybean oil and other oils containing poly-unsaturated acids, such as rapeseed, safflower, corn, and cottonseed oil all develop off flavours which are described as buttery, beany, grassy, musty or fishy.

All of the investigations conducted on the flavour stability of soybean oil have led to the manufacture of products of improved quality regardless of the composition of the starting material. That the flavour stability of products of good consumer acceptance can be manufactured from soybean oil is shown by the increased utilisation of this oil all over the world.

---

* Harold Westling, Pres. Swedish Margarine Industry at IFMA Conference, Stockholm, 24-25 May, 1967.

To achieve the highest quality product it is necessary to start with a good quality crude oil. The oil must then be protected from oxidation as much as possible during processing. Oxygen is absorbed by the double bonds of an unsaturated triglyceride forming peroxides. The peroxides are decomposed during processing, refining, bleaching, hydrogenation and deodorization to form carbonyl compounds are volatile and are removed during deodorization. Others are non-volatile, odorless, tasteless and remain in the products after deodorization. The non-volatile compounds accelerate the formation and decomposition of peroxides during storage of the ppoducts made from the oils.

Metal contamination should be avoided, particularly copper, since copper has a very pro-axidant effect on the oil. The replacement of one brass valve with a steel one is said to improve the quality of the product

manufactured. Copper is known to have an adverse effect on oils even when present in trace amounts.

Metal sequestering agents such as citric acid and phosphoric acid used under the proper conditions can reduce the effect of metallic traces to minimal amounts.

Food and Agricultural Organization of the United Nations Specifications for soybean oil

Essential Composition and Quality Factors

a. Identity characteristics

1. Relative Density (20°C Water at 20°C) = 0.918-0.925
2. Refractive Index (nD 40°C) = 1.466-1.470
3. Saponification Value (mg KOH per gm) = 189-195
4. Iodine Value (Wijs) = 1.5% by wt.

b. Quality characteristics

1. Colour
   Characteristics of Designated Product

2. Odour and Taste
   Characteristic of designated product and free from foreign and rancid odour and taste.

3. Acid Value (Max.Level) mg.KOH per gm = 0.6
4. Peroxide Value (Max.Level) mg. per kilo = 10.0

c. Contaminates

	Max. Level
Matter Volatile at 150°C	0.2% by wt.
Insoluble impurities	0.05% by wt.
Soap content	0.005% by wt.
Iron	1.5 mg/Kg
Copper	0.1 mg/Kg
Lead	0.1 mg/Kg
Arsonic	0.1 mg/Kg.

Fatty Acid Composition of Soybean oil.

Soybean oils have a rather wide range in fatty acid composition. The composition is influenced by the genetic characteristics of the variety and the climatic environment during the period in which the oil is elaborated in the seed. The usual range in fatty acid composition is shown.

Analyses	Minimum	Maximum
Saturated Acids Wt. %		
Myristic and Lower	Trace	0.5
Palmitic	7	11
Stearic	2	6
C20 and Higher	0.3	3
Total saturate	11	20
Unsaturated Acids Wt. %		
C16 and Lower	Trace	1
Oleic	15	33
Linoleic	43	56
Linolenic	5	11
Total unsaturated	83	90

Pretreatment of soybean oil prior to alkali refining.

Crude soybean oil contains from 1.5 to 3.0% of mixed phospholipids which are economically recoverable as 'lecithins'. Crude degummed soybean oil contains not more than 0.9% of the mixed phosphatides as indicated by the specifications for this type of oil. These ingredients remain in solution or as a fine colloidal state in the oil as long as they are anhydrous and the oil remains dry. When wetted they swell and form gels of higher specific gravity and separate in flocculant particles that can be separated by gravity if the oil is allowed to remain acquiescent or they can be separated centrifugally. The mixed phosphatides are economically recoverable as 'lecithins'.

There are essentially two systems of pre-treatment in use in the edible oil industry for the removal of the gums present in soybean oil.

A. Specific treatment with removal and isolation of the gums for sale as lecithins.

B. Conditioning of the gums with acidic additives followed by alkali treatment with the separation of the gums in the soapstock.

While both methods can be batch, semi-continuous, or continuous, the first method is generally more practical when accomplished in a continuous manner. The second method is practical for batch, semi-continuous or continuous processes.

Alkali Refining of Soybean oil

Soybean oil can readily be alkali refined from crude, crude-degummed or degummed oil since there is no decolorization problem. It is highly recommended that the oil be pretreated with 0.1 to 0.2% phosphoric acid or citric acid before alkali refining to remove the metal contaminates, particularly iron or copper, which are detrimental to the flavour and oxidative stability of the oil. The pretreatment also aids in conditioning of the gums when alkali refining crude or crude-degummed

oil. Most refiners in the United States do not previously degum crude soybean oil if the gums are not to be sold as 'lecithin'.

The specifications for 'refined soybean oil' are:

1. shall be clear and brilliant at 20 - 30°C
2. shall be free from settlings
3. shall not contain more than 0.1% moisture and volatile matter using the AOCS official method ca-2d-25.
4. The free fatty acids shall not be in excess of 0.1%.
5. The colour of the refined oil where bleached according to the AOCS method cc-8b-52 shall not be darker than 3.5 red and shall not have a predominately green colour.
6. The flash point shall not be below 250°C as determined by the AOCS tentative method cc-9b-55.

Batch Alkali Refining. Batch alkali refining is practised only to a limited extent in the United States and is the older of the

methods used. There are two types of methods employed for batch neutralization, the 'weak' lye and the 'strong' lye methods.

Equipment

The batch refining kettles for alkali neutralization are essentially of three designs. In the United States they are designed to hold approximately 27.3 metric tons with an overall capacity of 32 metric tons to allow for the addition of the alkali solution. The tank generally accepted is open-type having a diameter of 3.3 to 3.7 metres, 4.0 to 4.6 metres deep on the straight side to the top of a cone pitched at an angle of 45°.

The kettle is equipped with an agitator having a variable speed drive and held in a stop bearing at the bottom. The agitator can be operated from maximum speeds of 30-35 rpm to minimum speeds of 8 to 10 rpm. The agitator shaft is equipped with 4 to 5 sweeps which may be single or two-bladed paddles. These are

arranged to avoid internal obstructions in the kettle such as coils and swing pipes for decanting the neutralized oil. The sweeps are canted at an angle of 45° so that liquid in the tank is pushed upward. They are usually constructed of steel plate about 10 cm wide and 1.5 cm thick. They are bolted to the shaft at about one metre intervals and beginning at the top, project radially at 90°. There is usually a bottom sweep or plow which follows the cone and it is commonly wider and shorter than the others. This sweep has the function to prevent settling of the soapstock in the cone when the agitator is running at low speed.

The neutralized oil may be removed by decantation through a draw off or swing pipe and the soapstock may be removed through a 15-20 valve located at the tip of the cone. The swing pipe is usually about 10 cm in diameter.

The kettle is heated by steam coils arranged in two or three individual banks which empty the condensate through a common steam trap. The steam pressures in the coils is about 8 - 11 atmospheres. The cone is provided with a stay-bolted steam jacket which is heated by exhaust steam at 1.5 - 2.0 atmospheres.

In Europe and Asia there are two types of refining tanks employed: the open type and the closed vacuum combination neutralizer-bleacher. The geometry of these vessels depends upon the designer. Generally these vessels are not equipped with swing pipes for decanting the neutralized oil from the soapstock. The ratio of the height to the diameter of the cylindrical height varies from 1.5 to 2.5 with the lower part of the range preferable. The angle of apex of the cone is 90° or less to get the best slope for draining. Most vessels are equipped with internal coils for steam

heating. Some are equipped with steam jackets around the lower half and the cone while others have internal steam coils with a jacketed cone. The internal heating coils may be vertical or helical coils. The agitators vary according to the manufacturer's ideas of construction. The drive may be variable speed or two speed, since slow stirring is at times required. The following points must be taken into consideration in making a choice of the lye concentrations.

Design of the Refining Kettle

Where the refining kettle is equipped with internal heating coils and agitator without a swing pipe for decanting off the oil from the soapstock, the weak lye methods are probably the most practical since a less viscous soapstock is obtained which does not cling so readily to the coils, the blades of the agitator, and drains more thoroughly from the conical bottom of the vessel. This reduces the number of water washings required to remove the residual soap.

Where the refining kettle is equipped with a swing pipe and the oil is decanted to a separate water washing vessel or combination water washer and bleacher, either method may be employed.

Nature of the Soapstock. Where the soapstock is to be used for soap making, it is obviously an advantage that it contains as high a proportion of fatty matter as possible consistent with the case of handling. A strong solution of caustic soda produces a viscous soapstock which, when cold, may set into a solid mass. A solution of caustic soda should be chosen which will still allow the soapstock to flow out of the vessel at 60°-70°C. The greater the concentration of soap, the greater is its solvent power for neutral oil. However, if the soap is grained out, then it will hold less neutral oil.

The amount of Neutral oil saponified. The higher the concentration of the caustic soda solution, the greater the risk of some neutral oil

being saponified. This means higher refining loss.

The more dilute caustic soda solutions, the greater the tendency to form emulsions with neutral oil. Generally fats with lower free fatty acid content can be satisfactorily refined with relatively weak lye, whereas stronger lyes are required by high acid fats. The lesser danger of over-saponifications with weak lyes must be considered against the increased loss of emulsification.

The temperature of processing must be so chosen that the soapstock when it 'breaks' settles rapidly and completely to the bottom of the vessel.

"Weak" Lye Method (US)

The U.S. "weak" lye method has been made the subject of a patent which has been issued to a large American processor and was licensed for the use of others. It depends on the buffering action, the exact mechanism of which is not understood, of complex phosphates in the presence of caustic soda solution. The particular

compound which has been found most effective is tetra sodium phosphate. This method is used on both crude and degummed oil and is always a batch neutralization.

After charging the refining kettle, the air is allowed to escape by keeping the oil in a quiescent state for about 2 hours. The agitator is started at medium speed. The temperature is raised to 80°C by turning steam into the coils. At this point a weighed amount of a 10% aqueous solution of tetra sodium phosphate is added as rapidly as possible. In the case of degummed oil 1.0% by weight, and of a crude oil 2.5% on the basis of the crude. Heating is continued during the addition of the reagent and until the temperature reaches 75-80°C when the steam supply to the coils is cut off. The calculated amount of sodium hydroxide, usually 16°Be, is then added as rapidly as possible. The dosage for degummed oil is the theoretical amount of dry NaOH plus an excess of 0.1% and for crude oil, the theoretical plus 0.

0.3% excess both calculated on the original free fatty acid content of the oils.

As the caustic mixes with the oil, a break develops rapidly and the soapstock begins to appear in large flocks. When all of the caustic has been added, the speed of the agitator is reduced and the stirring continued for 5 - 10 minutes. The agitation is then discontinued and 7% of hot water is sprayed over the surface of the still oil through a series of spray nozzles so arranged that the entire surface of the oil is covered. The droplets of water as they gravitate through the oil and soapstock, soften and liquefy the soapstock which then settles rather rapidly to the bottom of the kettle. Usually there are three layers present, neutralized oil, a small layer of emulsion and soapstock in the form of thick syrupy liquid.

The contents of the kettle are allowed to settle for three hours and the soapstock is then drained off

through the drain valve located at the bottom of the kettle. As soon as the first trace of emulsion appears the drain valve is closed.

Another still wash of hot water is added at a level of 5% and the contents again allowed to settle for 1½ hrs. The wash water is then drained off, stopping again at the first appearance of emulsion. The soapy water contains so little fat that it can be discarded to the sewer.

A final still wash of 5% for crude and 3% for degummed oil is added and the mixture is allowed to settle one hour.

The successive still washes have diluted and broken down the emulsion layer until it has completely disappeared to a mere trace. If any emulsion is present it is so small an amount that it can be safely discarded.

The neutralized oil at this point contains 0.25 to 0.35% moisture and 150 - 300 p.p.m. of soap. If it is to be hydrogenated, it is pumped to the vacuum bleachers where it is dried and earth bleached.

If it is to be stored or made into salad oil, it is not bleached at this point since it now can be safely agitated without forming an emulsion when water washed to further reduce the soap content. The agitator is therefore started and a stream of oil is continuously withdrawn, continuously mixed with 10-15% hot water passed through a heat exchanger where the temperature is maintained at 70-85°C and the water separated from the oil by continuous separators. The soapy water is discarded and the oil containing 0.35 - 0.5 is continuously dried under vacuum. The soap content has been reduced to 20-40 ppm. and the moisture content to 0.03 - 0.05%. The oil can then be stored or it can pass on immediately to further processing to salad oil.

The yield of oil by this 'weak' lye method is said to be equal to that obtained by those of continuous methods, and less than that obtained by the strong lye method if it is carried out with skill and care. However, it still has the disadvantage of personel judgment of the operator and thus the human element plays a part in the refining efficiency obtained.

'Weak' Lye Method (Europe)

This method is widely used in Europe, as it can be applied to all oils and fats. However, the ultimate utilization of the soapstock must be considered. It entails a smaller loss of neutral oil than the 'strong' lye method when carried out with proper precautions. Special techniques and skills are required to prevent the tendency of formations of emulsions due to the thin soaps and mucilagenous solutions which are formed by the large amounts of water used.

The dilute caustic lye used for this method is usually 5°Be, the weaker the lye the less loss in neutral oil,

but the stronger lye gives a more concentrated soap solution, which is a better solvent for impurities including colouring matters. This method is less suitable for crude oil with a high acidity (6.0% FFA or more) as the volume of dilute lye required would be too large. Refining losses can be minimized by carefully adjusting the technique to a particular supply of crude oil due to over saponification or emulsification of neutral oil into the soap solution.

The soapstock due to its fluidity even at low temperature can be easily drained from the supernatant oil. If the process is applied to a non-degummed oil, a layer of impurities is often formed between the clear soap solution and the neutral oil, and great precautions are necessary to avoid an emulsion forming which will occlude large amounts of neutral oil. A degumming treatment is, therefore, often applied to oils intended for this process; there are however, modifications of

the process, the object being to remove residual soap or mucilagenous material in the oil phase or in the interfacial layer. Such washes may be with hot water, very dilute caustic soda, salt brine, soda ash, or alkaline silicate.

Determination of the conditions in which agitation and weak caustic soda can be used is a major problem. For the success of the various modifications of the process it is important to control the degree of stirring and it is desirable to have vessel fitted with a variable speed or two speed agitator operating from 8-10 rpm to 30 rpm for a 20-30 ton vessel.

Examples will show the application of the mentioned general principles of the process.

Crude oil, while being stirred, is heated to 95°C. Stirring is then stopped and 4°Be caustic at a temperature of 98 to 100°C is sprayed over the

surface of the oil. The excess of caustic soda may be slightly greater than that when strong lye is used. The degree of neutralization is determined by titration and if necessary more caustic soda solution is sprayed on the oil. The soap is allowed to settle for one hour and then drained off through the valve at the bottom of the vessel. There may at times be a small layer of emulsion at the interface. The emulsion may be drained off separately and accumulated from a number of refining batches. When a suitable number are collected, the emulsion is boiled with direct steam and treated with salt, which causes the neutral oil to separate from the soap solution. The oil is added to the next batch of crude oil and the soap solution to the main soap solutions for the recovery of acid oil. After removal of the emulsion, if present, a hot water wash of 5-10% of the weight of the oil is applied and drained off after settling one hour. This may be followed by a weak (0.7%) caustic soda wash and/or hot water

washes to remove the residual soap.

The use of agitation with weak caustic soda is a major problem in respect of determining the proper conditions. It is desirable to use agitation if at all possible at every stage to assure more intimate contact during the addition of the lye and then during water washing to remove the residual soap.

A dilute lye method frequently used is a s follows:

The oil is heated to 98°C and the thoeretical amount of 5°Be caustic soda solution plus an excess of corresponding to 0.5 - 1.0%FFA is added under gentle agitation. When all of the caustic soda has been added the agitation is discontinued and about 10% of a 0.4% caustic soda solution is sprayed on the still oil. This is left to settle and the soap solution drained off. A hot water wash with 10% wash is given th the oil and after draining it is followed by a wash with 0.4% caustic soda solution

at about 10% of the oil weight while steam is blown through the oil. After settling one or more hot water washes with 10% water are given to remove the residual soap.

Strong Lye Method.

Crude oil, crude-degummed oil, or degummed oil will tend to foam considerably and to entrain air and, if possible, the kettle should be allowed to stand for 2 hours without agitation to allow the air to escape.

Some refiners after pre-treating with phosphoric acid prefer to add the strong lye - 12-16°Be to the oil at a temperature not exceeding 32°C and preferably at 22-24°C with agitator running at medium high speed. At temperatures of 21-24°C a relatively tight emulsion is produced. After agitation is continued for 20-30 minutes at high speed, the emulsion will begin to have a sandy appearance which is known as a "pin break". At this point steam is turned into the coils

and as the temperature gradually rises, the particles of soapstock gradually coagulate, increase in size and tend to settle rapidly. An experienced operator will have no difficulty in determining at which point the soapstock will coalesce and have the optimum speed of settling. This point is usually attained at 50-55°C. At this point, the steam is turned off the coils, the agitation discontinued and soapstock allowed to settle. Generally samples are withdrawn just prior to stopping the agitation and a visual inspection made to determine the rapidity of settling and coalescence of the soapstock.

The contents of the kettle are allowed to settle for atleast 8 hours and preferably overnight. The neutralized oil is withdrawn through the swing pipe leaving the soapstock in the cone of the kettle. The refined oil is sent for further processing, which usually includes hot water washing to remove the residual soap, vacuum drying and bleaching.

Modification of the 'Strong' Lye Method U.S.

Some refiners prefer to heat the oil after pre-treatment with phosphoric acid to approximately 60-65°C then add the required amount of 12-16° caustic soda solution as rapidly as possible under rapid agitation until a fine "break" occurs, then reduce the agitation to slow speed and when the soapstock appears to reach the optimum speed of settling and coalescence the agitation is discontinued. This can be determined by taking a sample which show particles of soapstock floating in the clear oil and settling rapidly in the test glass which indicates the stirring of the mass can be stopped and the oil left for settling. After settling for about 8 hours, the clear oil is decanted from the soapstock by means of the swing pipe and subsequently water washed and vacuum dried.

Strong Lye methods other than U.S.

The amount of excess lye required for crude, crude degummed, or degummed soybean oil will vary with the amount of phosphatides present. This will vary

from 0.25 - 0.35% (dry basis) for crude oil to 0.1% for degummed oil.

As in all cases, the oil should be deaerated before adding the caustic soda solution to prevent floating soapstock.

In one method, the oil at 20-35°C is mixed with the caustic soda solution of the chosen strength and excess. The caustic soda solution is added by means of a spray pipe while the oil is vigorously stirred but not so rapid as to cause a vertex. The addition may take 10-20 minutes and when the caustic is thoroughly mixed with the oil stirring is slowed down to a speed just sufficient to keep the contents well mixed and the temperature is increased as rapidly as possible to 60°C. The 'break' will then take place under the influence of slow stirring and when they show a tendency to settle as can be observed by the appearance of rivulets of clear oil on the surface, the agitation

is stopped and the mixture left for settling. After settling for several hours, the oil is decanted from the soapstock or the soapstock is drained from the bottom. The oil is then water washed to remove any residual soap and dried.

In another method, the oil under agitation, is heated to 48-50°C with coil steam and then with open steam to 60°C. The amount of condensate added to the oil will be approximately 1.0% of the weight of the oil. Caustic soda solution of 15°Be at a temperature of 80°C is sprayed on the oil through a spray pipe in an amount equal to 1.75% times the theoretical amount and at a temperature of 80°C. Agitation is continued until the 'break' is obtained and the oil is left to stand in the quiescent state for 5 to 10 minutes. Boiling water is then sprayed over the surface equal to 10% of the weight of the oil without agitation and the contents of the vessel allowed to settle. After 2 hours, the oil can be drawn off through the

swing pipe or the soapstock drained off the oil. The oil is heated to 65°C with open steam and a further quantity of lye of 10°Be equal to 25% of the original theoretical amount for neutralisation is mixed into the oil. The contents are allowed to settle for 5-10 minutes and hot water equal to 10% of the oil is sprayed on and through the quiescent oil. The residual soap is removed by subsequent hot water washings.

Sometimes when dealing with oils which do not respond to the usual treatment without excessive losses, it is useful to add some auxiliary chemical which helps the 'break' and compacts the soap thus occluding less neutral oil. Salt, sodium silicate, soda ash, tetra-sodium pyrophosphate, tartaric acid, other aliphatic acids, salicylic acid and versene have been claimed to improve yields.

Dressler recommends using caustic soda of 15°Be while under rapid agitation followed immediately by

0.3% of a 4.0% solution of sodium silicate, agitating for one hour continuously. The mixture is then heated to 44°C under slow agitation and 5-8% water is sprayed on the surface. The soap on breaking settles on rapidly. The soapstock is decanted off through the swing pipe or drained through the valve at the bottom of the vessel. It is then water washed to remove the residual soap and dehydrated before bleaching.

A vacuum distillation method has been recommended by E. Bataille which can only be successful if the oil has been thoroughly degummed or difficulties in filtration will be encountered after stripping. The phosphalipids remaining in the oil in the amounts of 0.01% or less form a gel that decreases the rate of filtration upto 10 times that required for caustic refined and water washed oils.

CENTRIFUGAL SEPARATORS.

Refining losses in Batch type processing tend to be high due to entrainment of neutral oil in soapstock and emulsification during the process. As the price differential between neutral oil and soapstock is very pronounced, a lot of investigations have been carried out for reducing the refining loss to the barest minimum.

The use of centrifugal separators made this possible. Substitution of gravity settling of soapstock by high speed centrifugation naturally resulted in lowering the quantity of occluded oil in the soapstock. Besides, the changeover to continuous processing has made it possible to regulate the processing conditions in such a way as to minimise emulsification losses as well.

There are basically three types of centrifugal separators in use for the refining of oils :

Hollow Bowl Centrifuge.

1. Hollow Bowl Centrifuges were the first type developed. They are relatively simple in design and, when built in long tubular form of small diameter, allow the use of high centrifugal force with reasonable ratio of travel to

settling distance. The results obtained by continuous refining with these centrifuges are certainly better than those generally obtained with Batch type processing. The small capacities of the centrifuges make it possible for even the small-scale processor to take advantage of continuous refining.

However, centrifuges of this type have the following inherent limitations :

(a) The liquid entering at the centre is at first exposed only to a small percentage of centrifugal force available at the periphery of the bowl.

(b) Any sediment collecting on the inside of the bowl decreases the settling distance and reduces the maximum centrifugal force on the liquid. It reduces holdup, which, with constant liquid velocity, also reduces the time of exposure to centrifugal force.

(c) Extremely high centrifugal force is necessary to maintain efficiency of separation; the necessity of operating at tremendous speed results in high maintenance costs.

(d) As single machines of high capacity are not feasible, multiple installations are necessary.

(e) Frequent cleaning of the bowl is necessary, which means down time on the machine and interrupted operation.

(f) At least two washes and two water-wash centrifuges will be necessary for reducing the soap content in the washed oil within tolerable limits.

Gravity Disc Centrifuge.

2. In another widely used type of centrifuge, the separating chamber is a bowl containing stainless steel cone-shaped discs with thin spacers which produce very shallow settling spaces. The liquid is subjected to long travel with guided flow and moves with a moderate velocity. These machines operate at lower speeds and maintenance problems should be correspondingly reduced. More intimate mixing is apparently achieved in this type of centrifuge as only one water-wash is generally adequate for obtaining washed oil of acceptable soap content. These centrifuges can handle fairly large capacities and it is reported that there are installations where each machine handles about 25,000 lbs. an hour.

The disadvantages of this machine are: The bowl is heavy, has an objectionable number of internal parts to be handled and cleaned and is expensive.

Hermetic Centrifuge.

3. Hermetic Construction is a further improvement on the above type of centrifuges. The mixture of oil and soap-stock is fed to the separator under a pressure through a feed channel in the driving spindle. Since the system is completely closed, no admixture of air and very little

turbulence occurs. Hence the losses due to neutral oil being occluded in the soapstock or emulsification are reduced to a minimum. Besides, the oil is completely protected from contact with air which excludes subsequent oxidation; an important point with oils like Soybean oil. Another advantage claimed is that the soapstock is always discharged under pressure so that even hard and viscous soapstocks leave the machine without difficulty. Further, easy regulation of the process is a special feature of this machine; every centrifugal separator needs to be adjusted according to the process to be performed in it, but while open type machines have to be stopped to permit exchange of certain parts, as gravity discs, the Hermetic Separator can be adjusted to optimum working conditions even while themachine is running. Through a simple resetting of the control instrument, the separator can regulate the separating conditions and by observing the stream of soapstock flowing through the machine, he can achieve optimum working conditions.

Multistage Contactor Centrifuge.

4. Multistage Countercurrent Contactors (Podbielniak Inc., Chicago, U.S.A.) are said to make the most effective use of centrifugal force of any machine yet devised.

Their Duozon machine consists essentially of a horizontally positioned, totally enclosed rotor, mounted on a shaft with heavy duty ball bearings, force-feed lubricated. It is constructed of stainless steel with heavy welded steel base and rotor cover. Inside the rotor are many contacting elements which provide for intimate mixing coupled with low liquid velocity and controlled settling rates. The many contacting elements provide several times as much coalescing surface per unit volume processed as do conventional centrifuges.

The heavy liquid and light liquid are kept separate by pressure balanced mechanical seals, two on each side of the rotor. These seals are designed for pressures up to 700 p.s.i. and temperatures of 300°F.

The operation of the machine when used as a countercurrent liquid contactor is as follows: The light liquid enters through the shaft and is directed to the outer periphery of the rotor. The heavy liquid entering through the shaft at the opposite side is directed to the center of the rotor. Centrifugal force moves the heavy liquid outward, and it displaces the light liquid toward the center

of the rotor. The contacting elements are so designed that passage through the orifices provides multistage mixing and separation.

When a semi-solid, such as soapstock, is processed, it coalesces on the inner surfaces of the contacting elements and as it increases in amount, moves to the outer periphery of the rotor, where it deposits on the V-shaped annulus, which directs it to the spill-over sides of the rotor, whence it moves to the shaft and is discharged through a seal-shaft annulus.

The light liquid moves through the contacting elements toward the shaft and is discharged. A back pressure regulator automatically maintains a pressure on the light liquid attempting to leave. The effect of this pressure is to control the position of the interface (it is comparable to the ring dam in an ordinary centrifuge) separating light and heavy liquid, e.g., oil and soapstock, in the rotor. The position of the interface can be varied at will while the machine is operating.

Their Hydrason machine is perhaps the only machine

where separation of soapstock and countercurrent washing of the neutral oil is achieved simultaneously in the same machine. The importance of size as well as the avoiding of emulsification within the centrifuge, particularly in the areas where the water is introduced and the soapstock is separated, is established.

Pilot plant tests are said to have proved the efficacy of the process.* A degummed crude soya oil, FFA 0.35%, was refined with 1.5% 20°Be caustic soda. The oil, preheated to 125-130°F and pumped at the rate of 1.0 g.p.m. from a supply tank was mixed with the caustic soda solution added by the piston proportioner. The oil and caustic were thoroughly mixed in a vertical mixer equipped with paddles, the temperature heated to 150°F, before entry into the modified contactor. The wash water, varying from 10 to 17% was also introduced into the contactor. The oil effluent was clear moisture 0.22% and the soap content, determined by the flame photometer method, was down to 80 p.p.m. The soapstock was a clear yellow liquid that assayed 4.2 to 6.0% T.F.A., and was practically free of occluded or emulsified oil. The calculated refining loss was 0.75%.

* Ref: Extract from some recent developments of Refining of Fatty oils Morris Mattikow, JAOCS, May 1960 issue.

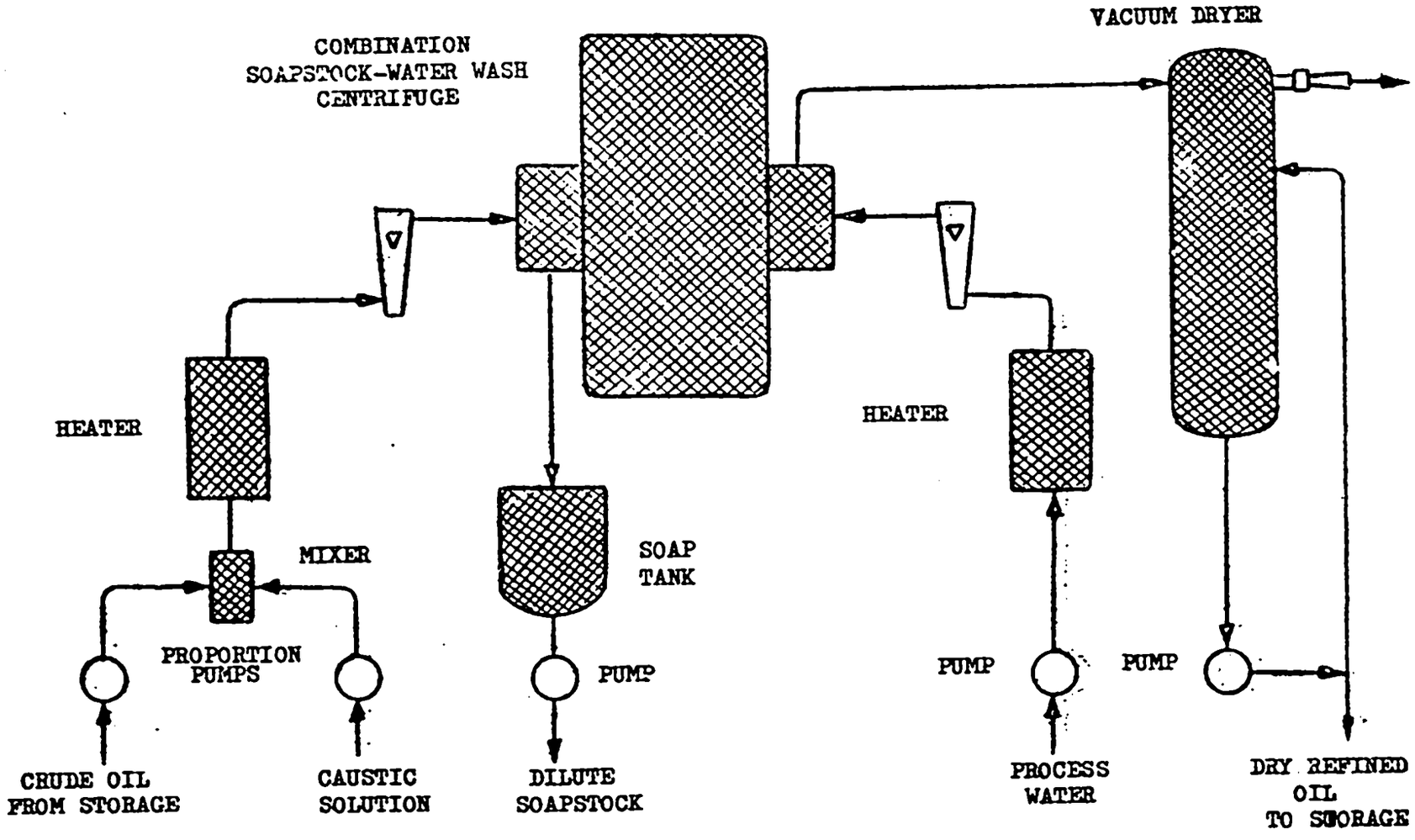

ACKW. COURTESY
PODBIELNIAK, INC.
DWG. NO. R-1005

REFINING CUM WASHING PROCESS

In the Hydrazon, Figure 4, oil-soap mixture enters at (A), moves through distributors (B), and is turned loose in the rotor at relatively low velocities. The soap, being of higher density, moves outward into the annular space (C) where it is deposited with least disturbance in a uniform layer. The oil separating from the soap flows toward the center of the rotor, however, it must first flow through a washing sections (G). Softened wash water entering at (E) flows into specially designed distributors (F), and is released to wash the oil. The water flows outward encountering oil which is flowing in the opposite direction, thus effecting true counter-current multistage washing of the oil. The weirs which distribute the water are on purpose directed to the center of the rotor, thus causing the water to change its direction in a smooth arc "trailing" the direction of rotation. This action causes the water to be fed gently into the oil in the form of a thin sheet of film at extremely low velocities to prevent emulsion.

Mixing of the water and oil for best contact is accomplished by a series of concentric elements in the wash section having fairly large orifices and spaced in such

a manner to obtain circumferential turbulence and redistribution of water. The oil emerging from the wash section enters a clarifying section (H) and finally exits at (I). Water flowing away from the wash section joins the soap layer, dilutes it and together moves over a circular spill-over disc, finally exiting at (D). A few pounds back pressure applied to the refined oil at (I) maintains a constant rate of flow of soapy wash water from the machine. In practice the differential pressure controller tied into the piping system keeps the machine "in balance" and operating continuously without loss of oil to the soapy water discharge.

These machines differ completely from conventional centrifuges because the "mix" is delivered to the rotor through specially designed conduits and weirs where at the point of entry or release of "mix" into the rotor the relative velocity is zero.

The washed oil, however, must give up energy as it flows back from its entry point and the concentric wash elements serve to slow down the oil. Turbulence created by slippage is sufficient to cause just enough gentle mixing of desoaped oil with water, avoiding serious emulsion difficulties in the wash section area.

(FIG-4)

CENTRIFUGAL REFINER WATER WASHER

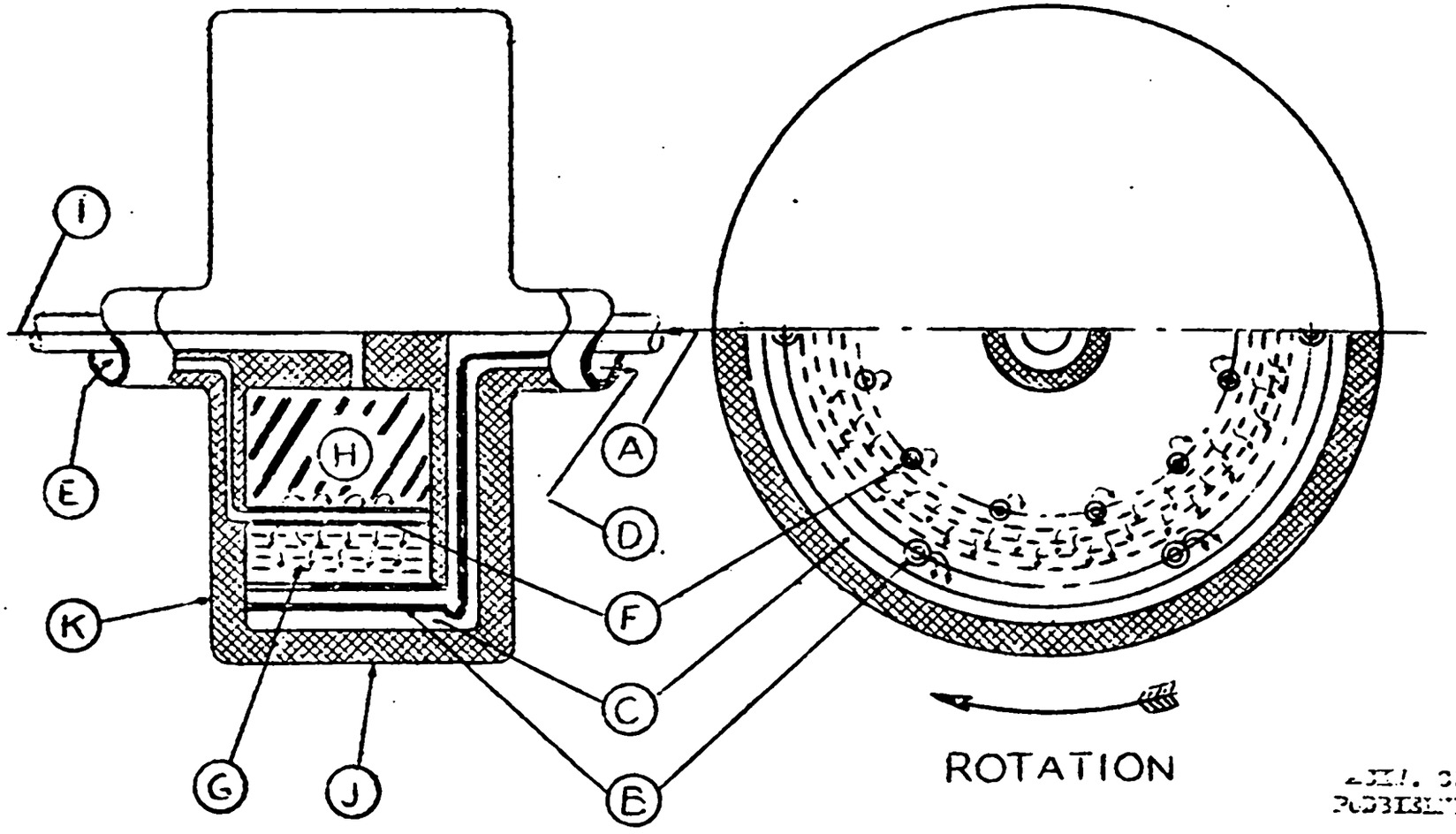

COURTESY PUBLISHER, INC.

MISCELLA REFINING.

The quest for further improvement in the field of continuous refining has resulted in development of Miscella refining techniques. The introduction of a polar solvent during the refining operation marks a big step forward in the evolution of refining techniques. Dissolving the oil to be refined in a solvent like Hexane, eliminates the viscosity barrier and, as a consequence, the hazards of emulsification and saponification. Further, unlike the earlier refining techniques, employing excess of caustic in the process does not result in increased refining losses. The quantity of oil entering the soapstock is likewise drastically reduced. The cumulative effect is a remarkable improvement in the overall performance.

Ranchers Refining Process.

The Ranchers Process, developed by Ranchers Cotton Oil, Fresno, California, is perhaps one of the first commercially introduced miscella refining processes, basically developed for processing cottonseed oil. This process is intended to be dovetailed with the operations of a solvent extraction plant. The miscella emanating from the

extractor is subjected to caustic treatment and the product passed through a horizontal concentric ring centrifuge in which the neutral oil miscella and soapstock are separated. The neutral oil miscella is filtered and returned to the distillation equipment of the extraction plant. It is claimed that the refined oil obtained needs no further bleaching.

A major drawback of this process is the proper desolventization of the soapstock. By virtue of its very nature and characteristics, it is well nigh impossible to completely desolventize the soapstock. The Ranchers Process, therefore, bypasses the problem by returning the soapstock to the Desolventizer-Toaster where it is desolventized along with the meal.

Neumi Refining Process.

De Smet of Belgium realised from the very outset that as long as soapstock is handled and dealt with as such, the possibilities of progress and improvements are strictly limited.

In their Neumi Process, the soapstock is continuously acidified and converted into fatty acids which can be

satisfactorily stripped of all solvent. Besides, the value of fatty acids is several multiples as that of soapstock and the economics of operation are therefore improved. The introduction of isopropanol as a second solvent opened up possibilities which are not otherwise available.

The Neumi process employs effectively a hexane-isopropanol mixture for solubilising the two chief products in the process - oil and soapstock respectively. Reaction between the caustic and the free fatty acids becomes instantaneous even at atmospheric temperatures and the reaction product, soapstock is solubilised right at its inception. After reaction in a mixer, the products separate into three distinct phases in a decanter: the top layer containing the neutral oil in hexane, the bottom layer holding the soap solubilised in alcohol, and an intermediary layer holding everything except the oil and soap. The bottom layer is continuously withdrawn, washed counter-currently with hexane to recover the last traces of oil, and then acidified with sulphuric acid in a special mixer. The acid dosing pump is mechanically synchronised with the caustic dosing pump in order to

ensure that the relative proportion of both reagents is automatically maintained; by way of abundant precaution an automatic pH controller in the acid circuit takes care of all eventualities. After final decantation, the fatty acids are passed through a thermostatically controlled rectifying column where all the solvent is effectively stripped and thence to storage with 90% purity. The heat of the alcohol vapours from the rectifying column is gainfully employed for the concentration of the oil-bearing miscella in a Economiser Unit.

The top layer of miscella from the main decantor is also continuously and counter-currently washed with isopropanol in order to wash out the last traces of soap. Thereafter, it undergoes further purification. Notwithstanding degumming and caustic refining, a certain amount of gums still remain soluble in the neutral oil; it further revealed that at a particular pH, these run-away gums are thrown out. As a practical application of this finding, the washed miscella's pH is regulated and the eluding gums effectively evicted from the mainstream. After a further washing with isopropanol and final decantation, the pure miscella is distilled in a classic

Economiser-cum-Distillation Unit.

The impurities in the clearly-defined intermediary layers from the various decantors, pass through two more gum-decantors for effective separation and recovery of miscella and alcohol. Finally, the impurities are acidulated in a special mixer by means of the acidulated alcohol from the final fatty acid decantor. This acidulation converts the fluffy impurities into a compact layer, releasing further quantities of miscella and alcohol which are recovered in a final decantor. Ultimately, the impurities are drastically stripped of all solvent in a gums boiler and thrown out as a spent mass, incapable of polluting the main products - oil and fatty acids.

The distinctive feature of the Neumi Process is the automatic regulation of the processing conditions for achieving a ternary Heterogeneous Azeotrope of Hexane - Isopropanol and water, distilling at a very low temperature of 56.5°C. From the point of removal of the last traces of soap from the miscella, an optimum Isopropanol-water mixture is indispensable - Isopropanol alone is in-

adequate for the purpose. It is only after extensive research that the ternary phase diagram was established and applied to the process. This is the crux of the Neumi Process.

On the equipment side, the De Smet Liquid-Liquid extraction columns obviously play a vital role. A large surface area and alternate intimate mixing and decantation are necessary. It is obvious that in the intimate mixing emulsions should not be formed which would interfere with subsequent phase separation. In the Neumi Process, the choice of solvents and the solvent-solute ratios are such, and the mixing is so good, that the liquid-liquid extraction is independent of the rate of inter-phase diffusion.

"٢"

BLEACHING OF SOYBEAN OIL. *

There are three major types of color in vegetable oil :

1. Organic color pigments of known composition
2. Organic degraddtion products
3. Color formed by oxidation of colorless precursors.

In the unoxidized state, the principal organic color pigments of known composition are quite readily removed by bleaching clays. The pigments in the most common vegetable oil are :

a) Alpha and Beta Carotene ($C_{40}H_{56}$)

The carotenes are yellow to red, and structurally consist of highly unsaturated hydrocarbons arranged in various cyclic configurations. An important characteristic of cartenoid pigments from the standpoint of bleaching is that they are unstable to heat and, as oxidation progresses, they gradually fade practically to a colorless state.

b) Xanthophyll ($C_{40}H_{56}O_2$)

Xanthophyll is colored yellow and is structurally similar to the cartenes except for an extra oxygen in the cyclic ring at each end of the hydrogen chain.

c) Chlorophyll A and B ($C_{55}H_{72}MgN_4O_5$) and ($C_{55}H_{70}MgN_4O_6$)

The chlorophylls are green, and structurally are unsaturated magnesium-containing pyrol derivatives and esters of the

* Extracts from paper by W.J.Lehmann, Courtesy National Soybean Processors Association of the U.S.A., New Delhi.

unsaturated primary alcohol phytol. Unlike the cartenoid pigments, the chlorophylls do not fade appreciably on heating. They are more readily adsorbed by clay with low pH, because alkali tends to stabilize chlorophyll whereas acid decomposes it.

The organic degradation products are brown in color and are present in vegetable oil usually from damaged seeds. They are generally composed of degraded proteins, carbohydrates, mucilagenous material, and phospholipids, and normally are present as positive colloidal dispersions rather than being oil soluble as are the organic pigments mentioned above. This type of color is usually difficult to remove by adsorption.

Color formed in oil by oxidation of colorless precursers, such as dark red chroman-5, 6-quinones from gamma tocopherol is difficult to remove by adsorption. It has been known for some years that as a vegetable and animal fat ages, it becomes more difficult to bleach. If the aged oil is darker than it was when fresh, the decrease in bleach response is due to the formation of new color which is difficult to adsorb. On the other hand, if the oil is

lighter in color upon aging, the color pigments have become fixed or non-responsive to adsorption, in all probability by oxidation.

The mechanism of bleaching was well expressed by King and Wharton when they stated that bleaching has two factors working in its favor (i.e. lowering color) - adsorption and color fading by oxidation, and two factors working against it (i.e. to darken color) - new color formation and fixation, both by oxidation.

Bleaching Equipment.

Contact adsorbent bleaching is usually accomplished either batchwise in open kettles or under vacuum or continuously under vacuum.

Batch Open Kettle Method.

This is the oldest and simplest method and is still in use in some plants. The oil is charged into a kettle equipped with a paddle agitator and steam coils, the agitation and heating started, and the bleaching clay and/or carbon added at 70-80°C. Agitation is continued for a time after the bleaching temperature, usually about 150°C is reached. The oil is recycled through a filter to obtain clarity for approximate 10 minutes and then

transferred to bleached oil storage. When the filter is full of clay it is blown with air for a few moments, then with steam at low pressure, to remove as much oil as possible, then with air to dry the press cake. Because of this high surface area, spent clay from the bleaching of unsaturated oils tends to undergo spontaneous combustion, and care must be taken in cleaning the presses. The use of low pH clays with unsaturated oils tend to increase spontaneous combustion.

Batch Vacuum Method.

The use of activated clays and higher bleaching temperatures led to the development of vacuum bleaching systems to protect the oils from oxidation. The process is similar to the open kettle method except that it is conducted under an absolute pressure of from 50 to 75 mm. The adsorbent can be added as a slurry in oil from a separate oil slurry tank or drawn in directly from a clay hopper through a valved line leading from the hopper below or above the vessel to below the surface of the oil. The addition of the clay as an oil slurry is recommended, particularly if the oil is refined and/or washed and dried in a combination process vessel, to avoid oxidation of the oil by drawing in air with the bleaching materials. If this cannot be

accomplished, then the oil after washing and drying should be cooled to at least 60-70°C before drawing in the bleaching clay.

Continuous Vacuum Bleaching.

There appears to be a widespread impression that as far as the Bleaching operation is concerned, continuous processing is an unnecessary sophistication, the extra investment on which is not justifiable as an investment. As would be evident from the following paragraphs, this impression is not factually valid; indeed, if any process or equipment be not economically viable, it would be meaningless to discuss it at all.

The bleaching of vegetable oils is a physical phenomenon involving the adsorption of the coloring matter on special materials such as Fullers Earth, Activated Carbon, etc. The impediments to obtaining best results are: moisture, air and soap. The temperature of processing and time of contact are important factors. Continuous bleaching offers the following advantages :

1. Removal of moisture from the oil under process is more efficiently and effectively accomplished by the Flash Drier. It is hardly a debatable point that drying a mass of oil under vacuum is not as effective as atomising the oil heated to the desired temperature in a chamber which is under

high vacuum. The sudden entry of the hot oil in a finely dispersed and atomised spray into an evacuated chamber is the most effective known method of drying a liquid. As moisture is undesirable for efficient bleaching, better drying would naturally lead to better bleaching.

2. The presence of soap, even in minute quantities, in the oil under process, is highly undesirable for the bleaching operation. In batch drying, the presence of soap and moisture frequently results in frothing and foaming, impeding the drying operation and posing problems of process control. These problems are eliminated in toto in the Flash Drying system.

3. Introduction of a separate Deaeration stage in the Continuous Bleaching System is an important step forward for elimination of dissolved and occluded air in the oil as well as the bleaching materials. In this connection, the following excerpt from Bailey's 'Industrial Oils, Fats and Waxes' - Page 663 is significant:

"The efficiency of soap removal during bleaching appears to depend upon the thoroughness with which oil and earth are dehydrated during the operation, as the oil retains soap tenaciously only in the presence of dissolved moisture. Because of this, a low soap content is favoured by vacuum bleaching and particularly by continuous vacuum bleaching, where moisture removal is facilitated by spraying the oil and clay slurry into an evacuated chamber. In a series of comparative plant tests, King & Wherton found that batch atmospheric bleaching reduces the soap in refined oil from an average of 103 to 32 parts per million whereas continuous vacuum bleaching effected an average reduction of from 114 to 15 parts per million."

4. A significant advantage of the special Deaeration stage is minimising, if not eliminating, oxidation hazards. In this connection also we cannot do better than quote from pages 666-667 of Bailey's "Continuous vacuum bleaching protects the oil from the harmful effects of oxidation even more

effectively than batch vacuum bleaching since better deaeration is effected by spraying the oil into a vacuum than can ordinarily be obtained by agitating a large batch under vacuum. Also the oil and earth are more completely deaerated and the contact time btween oil and earth is reduced. This reduces the soap content of the bleached oil, minimises free fatty acid development when acid earths are used and has been reported to produce oils of improved flavour stability".

5. Another important fact, which is perhaps little appreciated, is that continuous system of bleaching significantly improves the shelf-life of the finished product. We quote the authority of Bailey for the following observation:
"Mitchell and Kraybill have demonstrated by means of ultra violet absorption spectra that commercial bleaching commonly produces 0.1 - 0.2% of conjugated fatty acids in the glyceridon of cottonseed, corn, soybean and linseed oils, through the isomerization of nonconjugated fatty acids. Their observation is of some interest in its relation to the stability of bleached oils, in view of the readiness with which oxidation occurs in conjugated fatty acids and the anti-catalytic nature of the oxidation reaction in fats. Since some amount of prior oxidation was found to be pre-requisite to this isomerization, it would seem that it could be maintained at a minimum by deaerating the oil before bleaching, and carrying out the bleaching under vacuum. Continuous vacuum bleaching should be particularly effective in inhibiting isomerization, since the latter presumably requires appreciable time and the time of contact between earth and oil is much shorter in continuous bleaching than in bleaching by the batch system".

6. In continuous system the heating of the oil under process to the desired operating temperature is conducted only after the deaeration stage. It follows therefore that full protection is afforded to colour-sensitive oils.

7. The bleaching operation itself is conducted in a specially designed Bleachtower where optimum condi-

tions are easily maintained. By atomising the oil under process containing the requisite amount of bleaching materials and allowing it to flow in thin films over an extended surface, near-ideal conditions are achieved for maximum bleaching effect with minimum amount of bleaching materials. This arrangement is obviously far more efficacious than agitating a huge mass of oil with the bleaching materials suspended in it. Controlled injection of open steam facilitates maintenance of the desired temperature during the operation. A significant advantage is that contact time between the bleaching material and the oil is reduced to the barest minimum practicable.

8. It can hardly be gainsaid that the continuous process lends itself to finger-tip control. In the event of the finished colour of the oil being not satisfactory a flick of a valve would divert the oil into the feed tank for recycling and simultaneous adjustments of the dose of the bleaching materials.

9. Yet another outstanding facility is the automatic Dosing Device for proportioning the entry of the bleaching materials into the system. By a slight turn of a wheel the feed of the bleaching materials can be increased or decreased with the greatest of ease.

10. Storage bins of adequate capacity are mounted on the Dosing Device so that generally a 24-hour supply of the bleaching materials can be held on tap in the plant itself. It is easy to see that this simple arrangement substantially reduces the operating labour for the process.

11. Another salient feature of the continuous system is that filtration operation is also continuous. In the batch process the filtration is intermittant and a lot of time is lost in initial start-up of filtration. In the continuous process once the plant is put into operation, the filtration aspect needs little control. Two filters are provided in order to ensure continuity of the process - when one filter has to be cleaned, the other is pressed into service. This also results in saving in labour costs.

12. The continuous bleaching system is compact, occupying little space. Its operation is practically automatic requiring no special supervision. All that is required is to have an eye on the colour of the bleaching oil - a job which takes only a small fraction of an operator's time. Requirements of steam, water, etc. are substantially lower when compared to the batch system.

Continuous Countercurrent Vacuum Bleaching System.

The oil to be bleached is first deaerated and dehydrated by spraying into the lower section of the process tower at about 55°C. Deaeration is aided by a small amount of sparge steam below the oil level. The deaerated oil is then heated to 105-115°C by passing through an economizer counter current to the hot oil leaving the system and by use of a steam to oil exchanger.

The unbleached heated oil is then filtered through a closed press containing the spent cake from a previous batch and then pumped into the upper chamber of the process vessel. A clay slurry is made up of coal bleached oil leaving the system and metered clay in a separate agitated slurry tank. The final slurry is fed, again through a spraying device, into the upper section of the process vessel where it is mixed with the main stream of the oil. Here, too, sparge steam aids in the mixing and steam coils maintain the temperature. After about 10

minutes residence time, the oil is filtered through a clean press, partially cooled by passing through the economizer (oil to oil exchanger) and finally cooled to a temperature of 55°C by passing through a water to oil heat exchanger before being sent to storage.

Filters. The trend is to replace plate and frame open delivery filters with either plate and frame enclosed delivery filters or with pressure-leaf filters. In the United States more and more refiners are installing pressure-leaf filters of the Niagara horizontal leaf-type for all filtration purposes. The purpose is to increase the rate of filtration by filtering at the bleaching temperature and to avoid oxidation by cooling the oil before it is discharged into a storage tank.

Bleaching chemicals retain a lot of oil notwithstanding steam and air blowing operations. Besides, prolonged steam or air blowing is liable to have deleterious effects on the oil that is recovered.

At least 20% of oil is lost to Fullers Earth, the quantity retained being more with activated earths and even higher

with activated carbon.

An advantage of using Hermetic pressure-leaf filters is that after the filtration operation is over, the bleaching materials could be extracted with a non-inflammable solvent and practically all the oil retained may be recovered. This operation should be economically interesting in view of the prevailing high prices of oil.

DEODORIZATION OF SOYBEAN OIL.

As any other triglyceride, soybean oil contains some odoriferous substances. The green "beany" odour and flavour is characteristic of soybean oil. Nakamiya reported the presence of an unsaturated hydrocarbon, C-18H-32, gadusene, also present in fish oils. A nitrogen containing odoriferous material that reduced Fehling's solution has been reported to be found in soybean oil by Veskresenskii and Dobruinina. Jasperson and Jones identified terpenes, aliphatic hydrocarbons, methyl ketones and other alkyl methyl carbinols in deodoriser distillates.

These can be removed by low pressure steam stripping. Steam deodorization is effective in view of the great difference in the volatility between the triglycerides and the substances which give them the odors and flavours. The process is conducted at high temperatures to ensure higher volatility of the odoriferous substances. Very low pressures are used to protect the oil from oxidation at the higher temperatures. It will prevent hydrolysis of the glycerides and minimise steam consumption. It has been observed that notwithstanding such drastic

treatment, there is always certain amount of reversion of odors and flavors, particularly when strongly rancid oils are deodorized and exposed to air for longer periods even at lower temperatures. The rancidity is followed by increase of the free fatty acids percentage, an increase in the peroxide value.

In deodorization process the steam functions as an inert gas and has no chemical action on the volatile matters. The injected steam has no chance of condensing. An inert gas like Nitrogen is useful but the economics and easy availability of low pressure steam singles it out as an excellent tool.

The amount of odoriferous matter present is different in different oils and sometimes in the same oil. It is in the region of 0.1% to 0.5%. Salway estimated the amount of methyl-nonyl-ketone in palm kernel oil as 0.12% and in coconut oil as 0.03%. Phurman estimated it as 0.12% in groundnut oil and 1.75% in beef fat.

Vapour pressure data of volatile components are given as a general reference:

	MP deg.C.	BP deg.C.
Methyl-heptyl-ketone	15	193
Methyl-nonyl-ketone	15	225
Methyldecyl-ketone	21	247
Methyl-undecyl-ketone	28	263

(W.Brach, J.Sec.Chem.Ind. XLV (1), 73 T, 1926)

Assuming that the vapour pressures at the melting points are equal to the vapour pressure of water at zero deg.C, vapour pressure curves are drawn by means of Duhring Rule. The vapour pressure of methyl nonyl ketone at 100°C will be about 223.3 mm.Hg. It may also be assumed that the v.p. of the substance dissolved in the oil is directly proportional to its concentration. Therefore, 0.2% of methyl nonyl ketone in oil would have, at 160°C, a v.p. of about 0.517 mm.Hg. This points out the difficulty of deodorisation. Compared to the partial pressure of steam, the effect of the v.p. of the odoriferous substances appears to be negligible.

It is also observed that the removal of odor of an oil is proportional with the removal of its FFA content. The reduction of FFA is a measure of the extent of deodorisation. This is used as a reference in the process.

A glance at the table of the boiling points of some saturated fatty acids shows that the vapour pressure increases with decrease in the number of carbon atoms in the fatty acids at any fixed temperature, i.e., at a specified temperature of deodorisation the FFA with a lower number of carbon atoms will be removed with a greater ease than the higher carbon acids. The fatty acids of a given chain length exhibit very slight difference in volatility with different degree of unsaturation. This also means that at any temperature during deodorisation the removal of stearic and oleic acids could be concurrent and simultaneous; there is no preferential vaporisation of the unsaturated fatty acids.

Theoretical Minimum Steam consumption.

The process of deodorisation is a simple steam distillation operation. Under ideal conditions, it should consume minimum stripping steam and establish equilibrium between the vapour and liquid. Obviously the more effective the contact between the steam and the odoriferous matter, the closer the approach to the equilibrium concentration. By making use of Raoult's and Dalton's laws of partial pressures, Bailey proposed the following equation:

$$S = PF/EP_0 \, (O_1/O_2)$$

S = Moles of steam used for stripping
P = Total pressure within deodoriser
F = Moles of oil being stripped
E = Vaporization efficiency
P_0 = Vapor pressure of pure volatile component to be stripped from the oil (odoriferous matter, free fatty acids)
O_1 & O_2 = Initial and final concentrations of the volatile component in the oil.

It is, therefore, observed that the quantity of steam required for the deodorization is:

a) directly proportional to the amount of non-volatile glycerides present
B) directly proportional to the total pressure in the Deodorizer
c) directly proportional to the logarithm of the ratio of concentration of volatile components initially present to that finally present
d) inversely proportional to the vapour pressure of the pure volatile component
e) inversely proportional to the vaporization efficiency of the process.

It may be remembered that it is assumed that the system obeys Raoult's law and that Dalton's law of partial pressure is obeyed by the mixture of steam and volatile vapours. However, this is true only to a limited extent.

Garber and Lerman proposed an equation, besides the above assumptions, on the consideration of phase rule. The equilibrium partial pressure, p* has been assumed

to be a function of two variables, e.g., temperature(T) and concentration of volatile material (x); considering the three components: non-volatile oil, volatile substances and the inert stripping medium (steam); and the two phases: liquid and vapour system.

A study of the vaporization efficiency obtained by the two equations show critical variations influenced by the only major variable as the total pressure of operation which directly influences the factor for systems obeying Raoult's Law.

It may also be observed that at constant steaming rate and temperature the total pressure is directly proportional to the vaporization efficiency. Since this is the function of the shape of the steam bubble at the surface of the oil, the former falls when the pressure is reduced, but in fact, the temperature of the process is maintained so high that during its travel through the bulk of the oil the steam bubbles get saturated and a slight change in the total pressure does not affect the efficiency appreciably.

<u>Entrainment Loss.</u> But the entrainment loss is directly proportional to the

vacuum maintained in the head space of the deodorizer, the higher the vacuum the higher is the loss and this increases on a logarithm scale. The rate of oil loss increases exponentially between 250 to 400°F and becomes almost constant at the higher temperature. Bailey has shown that at a constant rate of steaming of 1000 lbs. of oil per hour the oil loss due to entrainment is about 18 lbs. at 25 mm. total pressure whereas the loss becomes 116 lbs. or about 6.5 times when the total pressure is reduced from 25 mm. to 10 mm. Souders and Brown have shown the theoretical suspending velocity with which the oil droplets are carried away. At elevated temperatures, some hydrolysis of the oil takes place resulting in loss of oil. A slight increase in temperature causes appreciable increase in the vapour pressure of the volatile substances thus reducing the steam consumption. Simultaneously it increases the loss of oil due to hydrolysis. An optimum relationship between these two variables will have to be maintained.

Apart from the above, by increasing the temperature the time required for the same reduction of FFA content is enormously reduced. In other words, the total effect of increase in temperature will rather go in favour of

an increase in efficient operation in so far as the distillation losses are concerned.

Entrainment Losses in Deodorisation at two different pressures.

Flow of injected steam lbs.per hour.	600	800	1000	1200
Loss in lbs.per hour at 10 mm. Hg.	9.09	40.46	115.9	-
Loss in lbs.per hour at 25 mm. Hg.	-	6.82	18.18	34.1

(Bailey A.E., J.Ind.Eng.Chem., 33,405 (1941).)

Distillation Loss during Deodorisation of Hydrogenated Cottonseed Oil.

Pressure: 10.mm.Hg. Injection Steam: 30 lbs.per hour.

Temperature, Deg.F.	300	250	400	450	475
Loss lbs.per hour	3.86	7.95	17.04	30.0	40.91

(Bailey A.E., J.Ind.Eng.Chem., 33,407 (1941).)

Bodman et al calculated the amount of stripping steam required to deodorise Soybean oil maintained at a temperature of 250°C and a blow steam rate of 400 lbs.per hour using the vapour pressure of oleic acid as a basis as below:

Temp.deg.C.	vp of Oleic acid mm.Hg.	Blow Steam required.lbs/hr.
204	4.5	2660
233	15.0	800
250	30.0	400
265	50.0	240

For fear of entrainment losses, the high quantity of blow steam at low temperature is reduced, and time increased.

Reduction of FFA & Color.

A study of the various changes during deodorization showed that the rate of fall of FFA during the first two hours was rapid and tried to level off after 3 hours. Similarly the color (Lovibond - 5.25 inches) of 2.5 units fell to about 1.7 units in the first hour and remained steady thereafter. The relative oxidative stability was found to drop down steeply due to the so-called metal effect of iron. Baldwin (JAOCS 25, 33-35, 1948) found that the stability increased rapidly during the initial part of deodorization and then dropped off. The product obtained from a glass deodorizer or a Chrome-Nickel unit showed no loss in oxidative stability. To counter the flavour reversion phenomenon, the material of construction of the deodorizer assumed a vital function. Ziels and Schmidt (N.W.Ziels and W.H.Schmidt, Oil and Soap, 22, 327-330, 1945) found that aluminium and nickel were the only ones absolutely free of the pro-oxidant effect. It was also mentioned in literature that the presence of even minute quantities of lecithin during deodorization was responsible for flavour instability. Degumming totally, avoiding higher temperatures during neutralization and bleaching, and addition of 0.01% of citric acid as a 20% solution added just prior to deodorization to inactivate any remaining lecithin are some of the steps indicated to

arrest flavour reversion. Dutton, Moser and Cowan(JAOCS 24, 261-264, 1947) observed that the citric acid treatment significantly arrested the flavor reversion even on aging.

Batch Deodorizers. The batch deodorizers are tall closed cylindrical vessels equipped with steam coils for heating and cooling and generally a three stage steam ejector vacuum system. A sparging coil is located in the bottom of the deodorizer to prevent heat losses. In operation, the deodorizer is loaded under about 25" vacuum with oil to be deodorized, to a level about half to 2/3 the height of the vessel, and steam is turned into the heating coils, the vacuum on the booster stage of the vacuum system. Live steam is then turned on, passing upward through the oil, the absolute pressure rising to about 8 mm. The oil is heated to about 210°-230°C, depending upon the steam pressure available, and deodorization is carried on for about 4 to 5 hours at this temperature. When the oil is sufficiently well deodorized, cooling water is fed to the coils and the oil cooled to about 70°C. At about 120°-140°C or so, a small amount of citric acid is generally added to the oil to scavenge the metallic ions and thereby improve the keeping quality of the oil.

Relatively recently the use of Dowtherm for heating has become common. By the use of this heating medium high temperature for deodorization has become practical since high temperatures can be attained with low pressures of Dowtherm as contrasted to very high pressures for steam. Temperatures up to 225°C or even higher are now used with subsequent better deodorizing results.

Normally the course of deodorization is not followed analytically, but is continued for a definite period of time which has shown by experience to give satisfactory results. After deodorizing, the oil is filtered to a brilliant clarity before filling. A sample of the oil is checked for flavor and odor, and subjected to the accelerated stability test known as the Swift test, or A.O.M. test.

Semi-Continuous Deodorizers. New installations of deodorizers are most likely to be semi-continuous or continuous units. The semi-continuous unit consists of five deodorizing chambers, called trays, mounted inside a vertical cylindrical vessel, all maintained under vacuum. The trays are light weight, since they contain little oil and do not have to support the vacuum, and are usually made of monel or stainless steel.

The outer vessel supports these trays and is made of thick steel plate. In operation, a measured amount of oil is pulled by vacuum into the upper tray, where it is heated to 160°-190°C by steam or Dowtherm while being agitated by a current of steam. After another 30 minutes the oil is dropped to the third tray and again after 30 minutes to the fourth tray. In both trays a heavy current of steam accomplished deodorizing. In the fifth tray the oil is cooled by water flowing through coils, while the oil is agitated with steam. In this tray the citric acid, and any other antioxidant is added before pumping the oil through a filter to a holding tank. All movement of oil from the measuring tank to each of the various trays, and to storage, and all heating and cooling, are controlled by sequence timer operating the various valves at the proper time. In other words, the operation is completely automatic. The advantages of the semicontinuous deodorizer are: much reduced stripping steam requirements (4 to 5 pounds of steam per 100 pounds of oil as compared to 20 to 50 pounds used in batch deodorization); savings in ejector steam and condensor water; and reduction of peak loads on heating and cooling utilities. Color reduction is equivalent to that of batch deodorization, free fatty acid reduction is about equal,

entrainment losses are not higher and may be lower, and flavour is as good as or better than with batch deodorization.

Continuous Deodorizers.

What are the ideal conditions for deodorization?

1. Highest possible vacuum (or lowest possible absolute pressure) in the system economically obtainable.

2. Maximum possible utilisation of the heating and stripping steam or minimum consumption of steam for obtaining best possible results.

3. Achieving most intimate contact between the oil and the stripping steam.

4. Perfect vapour-tightness of the deodorizing equipment to eliminate possibilities of entry of air in order to prevent oxidation and colour impairment.

5. Flexibility in operation, facilitating the processing of all kinds of oils.

6. Minimum quantity of oil in process for achieving quick start-up and easy change-over from one kind of oil to another.

Having laid down the criteria, let us see how best CONTINUOUS DEODORIZING SYSTEM stands up to requirements:

1. In batch deodorization the stripping steam just bubbles up through a column of oil and is rendered useless thereafter. From the point of view of intimate contact between the steam and oil and effective stripping action, the conditions prevailing in the batch deodorizer leave much to be desired.

   In the Continuous Deodorizing System, intimate contact between the steam and the oil is

achieved by special injection-mixing devices by which the stripping steam is made to throw up the oil in process in the form of fine spray simultaneously establishing perfect contact between the two. A series of such devices located in the bottom compartment of the Deodorizer achieves drastic stripping action unattainable in the batch system.

A further noticeable feature is, after performing its function in the bottom compartment, the escaping steam is made to do further work by encountering the incoming oil in thin films. It would be evident therefore that the stripping steam is atleast twice as effective in the continuous system when compared to the batch system.

2. As large batch sizes are generally in vogue - even upto 10 Tonnes - and, as mentioned above, the stripping conditions are unsatisfactory, a huge quantity of stripping steam is required in the batch process. In contrast, in the continuous system the quantity of oil in process is reduced to the barest minimum and consequently the consumption of steam is likewise reduced to the minimum.

3. Another significant advantage of minimum quantity of oil in process is that the start-up time is remarkably shorter and changeover from one kind of oil to another can be achieved easily and speedily.

4. Intermittent operations in the batch system are not conducive to heat exchange practices and effective utilisation of the process heat. The continuous system, by virtue of being continuous in operation, lends itself to efficient heat exchange techniques resulting in the maximum possible profitable use of the process heat. This contributes further to economy in steam consumption.

5. In the batch deodorizer considerable amount of steam is wasted for maintaining agitation in the oil during heating and cooling processes; such wastage of steam is totally eliminated in

the continuous system as the heating and cooling operations are conducted under dynamic conditions not requiring extraneous agitation.

6. The function of the deodorization equipment is to conduct the deodorising operation; in the batch process, utilization of equipment from this point of view amounts only to about 60%, the remaining time being consumed for charging, heating, cooling and discharging operations. In the continuous system the deodorizer is utilized upto 100% for the deodorization process alone as the flow of oil is continuous and heating and cooling operations are conducted outside the Deodorizer.

7. Air is the arch enemy of the deodorizing process. It results in oxidation and impairment of colour under the conditions of process. In the continuous system a special Deaeration Stage ensures effective removal of all entrained air before the oil is heated to the operating temperature and subjected to the deodorizing process. Better stability of the finished product and lighter colour is therefore achieved in the continuous system than in the batch system.

8. A certain amount of loss, termed the 'entrainment loss', is involved in the deodorizing process. The entrainment loss is reduced in the continuous system by virtue of the short duration of the deodorizing process - about 25% when compared to the batch processing - reduces correspondingly possibilities of hydrolysis of the oil and loss of the resulting volatile fatty acid.

9. By virtue of its low consumption of steam - about 40% as compared to batch processing - the requirements of condensor water in the continuous system are correspondingly lower when compared to the batch processing. Thanks to the effective heat exchange techniques, the requirements of cooling water are also significantly lower.

10. The equipment of continuous system is very compact and occupy a fraction of the space that would be required for batch operation of equal capacity.

This feature is of particular advantage at the time of expansion of the existing plants as higher capacities can be achieved without any extension of the building which would otherwise be necessary for batch system.

11. Above all, the continuous system ensures uniform quality throughout. It requires practically no labour for operational purposes once the plant has been started up.

Deaerated Steam an important factor.

First of all, deodorizer operation is closely tied in with good boiler operation. The first step in the operation of boilers supplying steam to the deodorizer is to be sure that the boiler feed-water is deaerated prior to entry in the boiler. Water at normal temperatures contain dissolved air; if this air is not removed before the water enters the boiler, then the air leaves the water inside the boiler and travels along with the steam. When this steam passes through the oil in the deodorizer, the air also passes through the oil, and we have a condition existing that the deodorizer is designed to avoid - that is, direct contact with air at high temperatures. To avoid this, the water should be passed through a deaerating preheater where the water is heated to, or close to, the boiling point under conditions where the air is removed from the water.

Dry Steam is Essential. If boilers are operated close to their maximum capacity, there are two potentially dangerous conditions that can adversely affect deodorizer operation. Surge loads, such as caused by opening steam to heat a batch of oil, applied to a boiler close to maximum output, will often cause the boiler to prime, that is, water from the boiler will carry over with the steam. When this slug of water reaches the deodorizer, it can cause two things to happen: wet steam passing through the ejector orifices will upset the vacuum system, and a slug of water entering the oil with the livesteam will cause a sudden vacuum break: the water upon contact with the oil at 210°-230°C will flash into large volumes of steam, momentarily overloading the ejector system, and possibly even causing a carry-over of oil into the condensor downlog. Also evaporation of this water will deposit boiler solids into the oil.

Steady Steam Pressure. The same overloads applied to the boiler can cause drops in boiler pressure, and if the steam pressure drops too low the steam ejectors on the deodorizer vacuum system do not work efficiently. The vacuum drops, or more correctly, the absolute pressure in the deodorizer rises, sometimes as high as 20 to 30 mm.

The net result of all the above described difficulties, or any part of them, is a decrease in stability of the product, as well as a deterioration in flavor and odor. The product is not as good as it can and should be.

HYDROGENATION. *

Hydrogenation provides means of converting liquid oils into semisolid plastic fats suitble for shortening and margarine manufacture. However, it also enhances the stability and improves the colour of the oil.

The reaction requires a catalyst; the catalyst employed in commercial plants consists basically of nickel, although minor amounts of copper, alumina etc., may be incorporated for their promoter action. By far the greatest amount of hydrogenation is carried out with powdered catalyst with the metal in a very finely divided form prepared by special methods and often supported on highly porous inert refractory materials, such as diatomaceous earth. The catalyst is suspended in the oil during hydrogenation and is subsequently removed by filtration at the conclusion of the reaction.

For hydrogenation to take place, gaseous hydrogen, liquid oil, and solid catalysts must be brought together at a suitable temperature. In ordinary practice, it may be assumed that the hydrogen is first caused to dissolve in

---

* Extracts from paper by W.J.Lehmann, Courtesy National Soybean Processors Association of the U.S.A., New Delhi.

the oil and the hydrogen laden oil is brought in contact with the catalyst by mechanical means. In the usual type of equipment, reaction is brought about by agitating the oil-catalyst mixture in an atmosphere of hydrogen. Agitation serves the double purpose of promoting solution of the hydrogen in the oil and continuously renewing the oil at the surface of the catalyst. The solubility of hydrogen gas increases as the temperature and pressure are increased.

The rate at which hydrogenation proceeds depends upon the temperature, the nature of the oil, the activity and concentration of the catalyst, and the rate at which the hydrogen and the unsaturated oil molecules are supplied together to the active catalytic surface. The hydrogenated product may vary according to the position of the double bonds which are hydrogenated, as well as certain isomerizing influences accompanying the reaction and are dependent upon the temperature.

Ordinarily, the concentration of nickel employed as a catalyst for the hydrogenation of fats does not exceed a few hundreds of 1.0% of the weight of the fat. The

total commercial usage of nickel for fat hydrogenation in the United States is estimated at 800,000 lbs. per year plus about 500,000 lbs. per year captive to produce about four billion pounds of hydrogenated fats. The total world usage of nickel was estimated to be 2.3 million pounds in 1962.

Catalysis in Fat Hydrogenation.

The type of catalysis that operates in fat hydrogenation is hetrogeneous catalysis. By definition, a hetrogeneous system is one in which the catalyst and the reactants exist in different physical states.

In hetrogeneous catalysis it is the catalyst surface which performs the catalytic function; hence the nature of the surface is of extreme importance. The fact that the characteristics of a solid catalyst are determined by the submicroscopic character of surface renders the study and control of such catalysts very difficult. Apparently, similar catalysts may differ enormously in activity and specific action.

It is now generally assumed that reaction in hetrogeneous catalysis proceeds through the formation of unstable

intermediate compounds or adsorption complexes, in which the catalyst is temporarily combined with one or more of the reactants.

Catalyst Poisons.

Hydrogen catalysts have a strong attraction for traces of soap and other impurities found in all oils. Their adsorption has a poisoning effect on the catalyst; that is, the portions of the catalytic surface which combine with the impurities lose their ability to react catalytically. The concentration to which the catalyst can be reduced in practice is limited by the necessity for providing a certain amount of active nickel for the absorption of poisons. The hydrogenation rate falls off rapidly as the amount of catalyst approaches that required to adsorb the poisons, and with any oil there is a catalyst level below which hydrogenation becomes impractically slow. With most oils and catalysts, this level is in the neighbourhood of 0.02 to 0.03% where hydrogenation is to be practically complete.

The presence of moisture and peroxides will reduce the rate and the course of the hydrogenation. The oil must be thoroughly dehydrated before hydrogenation. It was

demonstrated in pilot plant investigations that elimination of peroxides by predeodorization increased the rate of hydrogenation and in addition improved the flavor stability of the oil.

Gaseous Poisons.

The worst poisons are gaseous sulphur compounds; hydrogen sulphide, carbon disulphide, sulphur dioxide, carbon oxysulphide, etc., since they occur in oxide hydrogen prepared by the steam-iron, water gas catalytic or hydrocarbon reforming process. Sulphur poisons the catalyst irreversibly.

Besides sulphur compounds, the poison most likely to give trouble is carbon monoxide which is also present in small amount in unpurified steam-iron and steam-hydrocarbon hydrogen. Carbon monoxide is absorbed more slowly than are the sulphur compounds and poisons the catalyst reversibly. The poisoning effect of carbon monoxide is highly dependent upon the conditions of hydrogenation and particularly the temperature of hydrogenation. At 400°F, carbon monoxide in the concentration of 0.5% in the hydrogen will slow the operation to a barely noticeable degree. At 350°F, the effect will be much more noticeable, and at 300°F, it will not be possible to hydrogenate when

as little as 0.1% carbon monoxide is present without frequent evacuation. The poisoning effect of carbon monoxide is more troublesome at low hydrogen pressures.

Most other gases which may be present as impurities are carbon dioxide, nitrogen, methane, and in the case of electrolytic hydrogen, oxygen. These are not catalytic poisons although in the operation of the "dead-end" type of hydrogenators, they will slow the reaction if allowed to accumulate in the head space and dilute the hydrogen. Oxygen, of course, which cause oxidation of the oil if present in the hydrogen and have a harmful effect on the stability of the finished product.

Poisons in the oil.

The matter of catalyst poisoning through impurities in the oil has been discussed to a slight extent previously. Not a great deal is known about the natural oil and fat impurities that may function as catalyst poisons. Free fatty acids in small concentrations have little effect on the activity of the catalyst. Cartenoid pigments appear to be devoid of poisoning tendencies since there is no correlation between the colour of the oil and the readiness with which it may be hydrogenated. There are catalytic

poisons (probably phosphatides) in most crude oils; however, these oils are more easily hydrogenated after refining. In the case of some oils, such as crude fish oil, treatment with a liberal quantity of active bleaching clay is as effective in removing the poisons as alkali refining. However, in some instance the expedient is sometimes adopted of giving the oil a pretreatment with old catalyst during the bleaching step or at times prior to it.

Sodium and other alkali soaps are pronounced catalyst poisons. Sufficient soap to poison the catalyst will seldom be found in vegetable oils which have been well water washed, dried and bleached after alkali refining. A wide variety of substances were tested for their effect on nickel catalysts by Ueno.

Carbon monoxide is often observed to accumulate in closed hydrogenation systems and is generally considered to be formed by the decomposition of the oil. However, this compound is also a trace impurity in such commercial hydrogen and there is considerable doubt that there is any appreciable evolution of CO from oil except at quite

elevated operating temperatures.

Effect of Poisoning on Product Characteristics. Partial poisoning can effect other characteristic than just the activities of the catalyst. Sulphur poisoned catalysts, in particular, produce large quantities of iso-oleic acids in hydrogenated oils. Catalysts which have become partially inactivated in use also produce hydrogenated products which are higher in isooleic acids at a given saturated acid level.

Heat of Reaction. Hydrogenation is an exothermic reaction. From the best available specific heat-data, the temperature rise recorded by Kaufmann corresponds to 1.6 - 1.7 BTU/lb.per unit drop in iodine number. Hydrogenation of olive oil, castor oil and oleic acid yields sufficient heat of reaction to raise the temperature 1.6 to 1.7°C per unit decrease in iodine number.

Incidental Effects accompanying Hydrogenation: Isomerization. In the hydrogenation of fats there is considerable tendency toward the formation of isomeric unsaturated fatty acids with properties different from the natural occurring forms. Such isomers may originate from (a) addition of hydrogen at a double bond which is not

normally saturated by natural process, (b) the migration of double bonds, or (c) conversion of natural to trans acids.

Conclusions regarding composition of hydrogenated fats, especially those published prior to about 1955 must be accepted with reservation. New analytical tools introduced at that time, such as, the infrared spectrophotometric technique of proved reliability, have provided a better picture of what incidental effects accompany hydrogenation.

From practical standpoint these isomers or new acids of hydrogenation are of interest chiefly because of their relatively high melting points and subsequent effect on the consistency of the hydrogenated products. In the parlance of the industry the term "isooleic acids" refers simply to the unsaturated acids of high melting point which appear with the saturated acids in the conventional lead soap separation of the latter. According to Jackson and Callen at least six different isooleic acids are to be found in partially hydrogenated cottonseed or soybean oil, with melting points ranging from 44° to 53°C.

Sims and Hifman observed on hydrogenating lard, tallow, linseed, cottonseed, soybean and olive oils that at the point where the trans acids reached their maximum they represented one half to two-thirds of the total double bonds present in the hydrogenated fat.

In addition to its bearing upon the consistency of the hydrogenated fats, the formation of various isomers is some concern in relation to their stability. The position of the double bonds has a great influence upon the rate at which a polyunsaturated fatty acid or its ester will oxidise. In particular, an acid with widely separated double bonds, such as 9 : 10, 15 : 16 octodecadienoic acid is much more resistant to oxidation than a natural acid of equal unsaturation which contains the active - CH: $CHCH_2CH$: CH - group or the methylene interrupted double bonds.

When it is recalled that all natural fats consist not of one but of a number of different glycerides, it will be appreciated that hydrogenation is too complicated and methods of analysis too inadequate for any but the main trends of the overall reaction to be discernible by even present analytical techniques.

Influence of Temperature, Pressure, Agitation & Catalyst.

In discussing the influence of any single operating variable upon selectivity and trans-isomer formation, its dependence upon other existing operating conditions cannot be ignored. This inter-dependence is well demonstrated in the work of Eldib and Albright.

Thus whereas selectivity is improved in general by increasing the temperature of hydrogenation, in some combinations of operating conditions the influence of this operating variable is essentially absent. In the case of rate of agitation and catalyst concentration, their influence can not only be nullified by other conditions but may be reversed, as at high pressures.

It is noted that not only is the rate of agitation a variable of some consequence but so is the type of agitation. Influences that are effective using a bladed paddle agitator are eliminated when a gas dispersing turbine type agitator is substituted under otherwise identical conditions. Keeping all these factors in mind, under normal operating conditions selectivity is improved by increasing the temperature and the degree of agitation. Diene conjugation follows a like pattern.

In summary, the higher the temperature the greater the selectivity and the more isooleic (trans acids) are formed. The rate of hydrogenation also increases.

The higher the pressure the less selective the reaction becomes, with less trans-isomer formation. The rate of hydrogenation increases.

The higher the catalyst concentration the greater the selectivity with more transisomer formation and again the rate increases.

Effect of chain length on ease of Hydrogenation.

Acids of high molecular weight appear to hydrogenate less rapidly than lower-molecular-weight acids of the same equivalent unsaturation. Hilditch and Paul have observed, for example, that erucic acid is hydrogenated with more difficulty than oleic acid. Artameonov confirmed this observation and suggested this might explain in part the difficulty of hydrogenating such oils as rapeseed and mustard seed oil.

Hydrogenation Equipment.

Almost all of the oil hydrogenated commercially is processed in batch equipment. Although the development and

adoption of continuous processes have been the general rule in other oil processing operations, continuous equipment has not become popular for hydrogenation. This fact may be attributed to considerable mechanical difficulties in achieving the close control and high selectivity by modern processors, and the diversity of hardening conditions in most plants which require greater flexibility than is readily obtained in a continuous system. Continuous hydrogenation processes are under continual investigation.

In designing a hydrogenation reactor the principal object is to obtain good mixing of hydrogen and oil; mixing of oil and catalyst is of minor importance. Hence an efficient hydrogenator is essentially an efficient and easily controlled gas absorber.

In the early days of hydrogenation, favour was divided between the so-called Wilfusschewitock system, in which oil sprayed into an atmosphere of hydrogen, and the Norman system in which hydrogen is bubbled into a body of the oil. In the United States, the development of the modern Norman system has been in the direction of simplifying rather

than elaborating the apparatus. The former system is now seldom used. The hydrogenation plants now operating commercially in the United States are essentially divided between recirculating systems in which agitation and dispersion of hydrogen are achieved by continuously recycling hydrogen in large volumes through the reactor, and the newer "dead-end" systems in which the reactor is supplied only with as much hydrogen as is absorbed, and the dispersion of the gas is accomplished by mechanical agitation.

Batch Equipment - Recirculation system.

The reactor proper is a tall cylinderical vessel having a capacity varying between 20,000 to 40,000 lbs. of oil containing heating coils and a distributing device in the bottom for breaking up the injecting hydrogen into a stream of very fine bubbles. A blower or compressor is provided of large capacity which continuously withdraws hydrogen from the headspace of the reactors, forces it through a purification train and sparges it back into the oil. Undue build up of impurities and other non-removable impurities is avoided by intermittent venting to the atmosphere. With hydrogen of good quality venting 3 or 4% of the total hydrogen is adequate. Although hydrogen is sometimes supplied from a high pressure

tank it is more usual to store it in a low pressure holder. The recirculating blower may be designed to build up a moderate pressure upon the reactor, but more commonly the reaction is carried out at slightly above atmospheric pressure.

There are considerable differences of opinion as to the benefits of the purification train and this portion varies considerably in design. The earlier plants subjected the recirculating gas to water washing, caustic scrubbing, and in some cases, to contact with active carbon. In using the relatively pure hydrogen supplied by modern electrolytic, steam hydrocarbon, or steam-iron plant there is no real advantage in elaborate purifications and some processors employing this system omit all steps except water washing anduse this step only as a convenient means of cooling the exit hydrogen before it reaches the recirculating blower.

In the operation of the recirculation system, the reactor is almost always kept filled with hydrogen under low pressure at all times except when hydrogenation is actually in progress. When the catalyst is added to the

oil, hydrogenation takes place during the heating period, and thereafter as long as it is required to reduce the oil to the proper specifications; water is admitted to the coils to carry away heat of reaction and maintain the temperature within proper limits. At the conclusion of the reaction, the reaction is stopped by shutting down the compressor and the finished charge is pumped out through an external cooler to a filter press where the catalyst is removed and thence "post refining" and to storage.

Batch Equipment - Dead End System.

Modern dead-end hydrogenators are closed vertical cylindrical vessels of about 10,000 to 60,000 lbs. capacity designed for full vacuum, and 100-150 pounds working pressure. Coils within the vessel are provided to take either water for cooling or steam for heating. As these reactors require less head space above the oil charge, they are generally somewhat shorter in relation to their diameter than the reactors used in the circulating system. Only special agitators designed to give efficient hydrogen dispersion, are satisfactory for dead-end hydrogenators. A widely used agitator at present has two or more turbine type impellers of a special shrouded design, with the top

impeller relatively near the surface of the oil and provided with a suction sleeve, that projects into the head space and induces hydrogen from the head space back into the oil.

A newer but highly efficient agitator employed impellers consisting of flat paddles set vertically around the periphery of a flat horizontal disc. In some units vertical banks of tubes around the inner wall serve the double purpose of heating or cooling the charge and providing baffles to limit swirling of the oil and improves hydrogen dispersion. However, the upper manifold consists of an expansion loop to avoid fracturing of the tubes due to expansion and contraction during the heating and cooling periods. Others have helical coils with baffles mounted to them to obtain the improvement in gas dispersion.

An important accessory of the dead-end hydrogenator is a steam ejector capable of quickly evacuating the empty hydrogenator and maintaining a vacuum of 28 inches. The evacuator can be of a single or two stage non-condensing type. Hydrogen is supplied to the unit from high pressure storage tanks through a reducing valve set at a constant

operating pressure and is admitted to the unit only when hydrogenation is actually in progress.

In operation of the dead-end, hydrogenator is kept under vacuum while the charge of oil and catalyst is being pumped in, and also while the oil is being heated to the operating temperature, the object being to deaerate and dry the oil before it reaches high temperature. When the batch reaches the operating temperature, the vacuum line is closed, and hydrogen is admitted to the vessel until the pressure is just above atmospheric pressure. The hydrogen supply is shut off and the vessel again evacuated to at least 125 mm absolute pressure. This is a safety practice to avoid having an explosive mixture in the hydrogenator while the reaction is being carried out. Investigations were conducted in production scale hydrogenators (12.5 ton units) which indicated by analysis of the gas in the head space that an explosive mixture was present in a hydrogenation unit at 125 mm and 50 mm absolute pressures and was avoided only when the absolute pressure was at 12.5 mm or less. It requires at least two purges and evacuations to 125 mm if the original vacuum is 125 mm absolute pressure.

The hydrogenators are normally equipped with two relief valves and steam supply line to the head space should a fire occur at the stuffling box or seal of the shaft of the agitator. An open steam line is normally installed direct to the stuffling box or seal to aid in extinguishing the fire from the outside of the unit. The steam valve supplying steam to the head space should be opened before closing the hydrogen supply valve to avoid drawing air into the unit and causing an explosion.

At the end of the hydrogenation period the flow of hydrogen is stopped, the hydrogen in the head space is drawn out by the vacuum system and the hydrogenated oil cooled to 160-190°F by water flowing through the coils. The hydrogenator is then purged with air or preferably nitrogen one, two or three times to avoid an explosive mixture in the case of air forming in the unit. A vent line to the atmosphere should be installed in the hydrogen line between double block valves to prevent hydrogen from leaking into the hydrogenator while pumping out the charge to the filters.

Some processors operate mechanically agitated hydrogenators

in such a manner to combine typical features of the dead-end units and the recirculating systems. For example, a small amount of hydrogen is bled back through the purifying system and then recompressed and added to the gas in the high pressure storage tank. Another example is that the batch may be cooled externally through a heat exchanger or dropped into a second tank under vacuum where it is cooled while a second charge is pumped into the hydrogenator. One processor utilises the heat of the hydrogenated air to preheat the incoming charge by pumping it through coils located in the drop tank.

The advantages of dead-end hydrogenation with evacuation of the hydrogenator in comparison with hydrogenation by gas circulation are :

a) Prevention of oxidation and hydrolysis of the oils, through deaeration and dehydration of the charge.

b) More positive controls of the reaction and consequent improved product uniformity (the reaction being carried out at a definite and constant temperature) and the amount of hydrogen absorbed by the oil is easily ascertained from the pressure drop in the hydrogen supply tank.

c) Greater latitude in selectivity and decreased dependence upon the temperature as a factor determining selectivity.

d) Less expensive and more easily maintained.

Effect of Hydrogenation on characteristics other than melting point.

The characteristic of fat most directly affected by hydrogenation is the iodine number which decreases in direct proportion to the amount of hydrogen absorbed.

Certain nonglyceride constituents of fats and oils are reduced during hydrogenation including carotenoid pigments and probably unsaturated hydrocarbons. The hydrogenation of the carotenoids usually causes a marked decrease in the colour of vegetable oils. Unbleached palm oil which is deep orange red is no darker than other vegetable oils after it is hydrogenated.

Ordinarily the free fatty acid of a dry oil is not much affected by hydrogenation and may increase by 0.1 to 0.2%.

Hydrogenation will destroy the natural flavour and odour of any oil or fat, producing instead a distinctive rather unpleasant hydrogenation odour which must be removed by deodorization.

The stability of the oils as measured by the accelerated oxidation tests is progressively increased as the oils are hydrogenated.

Hydrogenation reduces the refractive index. The relationship between iodine number and refractive index depends largely upon the average molecular weight of the glycerides. The correlation between the refractive index and the iodine number is not precise for any given variety of oil but the refractive index will indicate the iodine number of a hydrogenated oil within one or two units. Since the refractive index measurements can be easily and quickly made, they are often used as a means of controlling hydrogenation.

Effect of Hydrogenation upon the melting point, consistency and solid Fat Index (by Dilatometry)

During the first stages of hydrogenation the consistency of an oil and the characteristics related to it, such as the melting point, softening point, congeal point and solid fat index depend a great deal upon the conditions of hydrogenation and the characteristics of the catalyst. The melting point varies according to the saturated acid content and hence depends upon the selectivity of the reaction.

The lack of selectivity with respect to hydrogenation of glycerides, quite as much as the equally unavoidable formation of transisomers, renders it impossible to

produce hydrogenated fats or oils which are equivalent to some of the natural fats. Natural fats tend to be softer in consistency and lower in melting point than it is possible to make hydrogenated oils of the same iodine number. Olive oil, for example, has an iodine number of about 80 but remains liquid to quite low temperatures. Cottonseed and Soybean oil hydrogenated to this iodine number are lard-like in consistency at ordinary room temperature. Consequently, lard substitutes can be prepared by the hydrogenation of vegetable oils to iodine numbers in the same range as lard.

Methods for Hydrogenation control.

Even though different batches of oil are hydrogenated to the same iodine number under uniform conditions, slight variations occur immediately in the composition and characteristics. Hence it is necessary to control the hydrogenation of edible oils to their physical characteristics, rather than strictly to the quantity of hydrogen absorbed. In practice it is customary to adjust the conditions of hydrogenation so as to obtain the proper balance between the formation of saturated acids and isooleic acids (trans-isomers) and then hydrogenate the oil for enough to bring all batches to a uniform consis-

tency at ordinary temperatures (70-80°F).

The problem of hydrogenation control is less difficult if more than one hydrogenated stock is blended to produce the product in question and if a number of converter batches can be blended in making up the lot. In the manufacture of some stocks it is almost essential to interrupt hydrogenation at some point short of the end point and check the consistency of the oil by analysis before finishing the batch.

Of the various methods that are used to control hydrogenation are the congeal point and the solid fat index. Because the solid fat index determination is time-consuming, the congeal point is used along with the refractive index as the control with the solid fat index as the final control after hydrogenation.

PRODUCTION OF HYDROGEN GAS.

Several methods are available for producing Hydrogen Gas. The choice of any particular method is however governed by several considerations. The most important methods of hydrogen gas generation are by means of :

a) Steam-Hydro carbon process

b) Steam-Iron process

c) Electrolysis of water.

Steam-Hydro Carbon Process.

This process is also called hydro-carbon reforming process for hydrogen manufacture. It is based on the concept that hydro-carbons react with steam to produce carbon-di-oxide and hydrogen. The process using Propane as hydro-carbon has been developed to produce high quality hydrogen required for fatty oil hydrogenation. This process envisages removal of organic sulphur compounds from the Propane by heating the gas to 700°F and passing the vapours over a catalyst such as Bauxite or other metallic oxides. The sulphur compounds are converted into hydrogen sulfides. Hydrogen sulfide is removed by scrubbing by alkali such as caustic soda or sodium carbonate solution. The purified propane gas is then mixed with steam and

passed through furnace tubes containing a nickel catalyst. The reaction takes place at a temperature of about 1500°F. The furnace consists of one or more long alloy steel tubes supported vertically within refractory walls and heated by burners supplied with natural or manufactured gas, fuel oil or some other available fuel. The reaction takes place according to the following equation:-

$$C_3H_8 + 3H_2O = 3CO + 7H_2.$$

A portion of the carbon monoxide formed undergoes further reaction, which is termed as 'Water gas shift reaction'. The following equation is applicable:

$$CO + H_2O = CO_2 + H_2.$$

The mixture of hydrogen, carbon monoxide and carbon-di-oxide emanating from the furnace is further mixed with steam to cool it to about 700°F. The mixture is then passed through a bed of another catalyst . In this section 90-95% of the carbon monoxide is converted into carbon-di-oxide and hydrogen as per the above equation. The generated gases are cooled to 100°F and carbon-di-oxide is removed by scrubbing with ethanolamine solution. Obviously all the carbon monoxides must be removed from the hydrogen gas before it can be used for hydrogenation of oil. Otherwise carbon monoxide is a strong catalyst poison and

even trace of this would seriously affect the hydrogenation reaction. Sometimes traces of carbon monoxide are removed by catalytic reaction with hydrogen, forming methane. Methane is a gas which will not affect the hydrogenation reaction.

It may be noted that water-gas shift reaction, unlike the reforming reaction, is highly exothermic. This exothermic heat could be used profitably to heat the incoming as mixture. It is estimated that approximately 2.75 gallons of propane are required to produce 1000 standard Cft. of hydrogen. In addition, 300 Cft. of carbon-dioxide is produced as by-product.

The steam-hydrocarbon process has great flexibility for producing hydrogen gas. The output can be comfortably reduced without significant decrease of operating economy. The process however is advantageous when approximately 5000 Cft. of gas per hour or more is required.

Steam-Iron Process. This process consists essentially of alternate oxidation and reduction of a hot iron mass. Reduction is accomplished by means of the hydrogen and carbon monoxide in

ordinary water gas, made by blowing hot coke with steam, or reformer gas made by reacting steam with natural gas or other light hydrocarbon. In the oxidation cycle the ore mass is blown with superheated steam, with the oxygen of the latter combining with the previously reduced ore and the hydrogen being set free.

There are many side reactions which do not contribute to the production of hydrogen. Considerable quantity of impurities are produced and they must be removed before the gas is rendered suitable for fatty oil hydrogenation.

Carbon monoxide is also produced in the furnace. This is used for reducing the Ferric Oxide to an elemental iron. The carbon monoxide is converted into carbon-di-oxide. The water gas is used as reducing agent. Sulphur compounds in this gas combine with iron ore in the furnace to form iron sulfides. The iron sulfide is in turn reacted with steam, producing hydrogen sulfide and other sulphur compounds which are also carried with the hydrogen gas. Sulphur compounds are worse catalyst poisons than carbon monoxide. Therefore, the sulphur compounds must be totally eliminated before the hydrogen gas could be successfully

used for hydrogenation.

It may also be observed that the largest single item of expence in making steam-iron hydrogen by utilisation of water gas is the coke for the manufacture of reducing gas. The efficiency of the hydrogen gas varies largely according to the designs of the equipment. The ratio of 1.5 volumes of water gas to produce one volume of hydrogen is considered to be reasonably efficient.

The possibility of reversible reactions during the manufacture of hydrogen by this process are substantial. These must be guarded against. The investment is fairly heavy and a substantial quantity of gas of approximately 10,000 Cft. of hydrogen per hour should be generated to make this process economical.

Electrolysis of Water.

Production of hydrogen gas by means of electrolytic dissociation of water is very popular and most dependable process. The principle consists of passing direct current through the electrolyte solution in a 'cell'. The current serves to dissociate the water into high purity hydrogen and oxygen gases which are separately collected at the

respective electrodes. The gas is led to low pressure gas holders and subsequently compressed into high pressure storage cylinders.

Electrolytic process yields without much of difficulty hydrogen gas of 99.9% purity. No further purification steps will be necessary. In general the process is continuous and needs negligible supervision and control. The direct current is obtained by passing an alternate current through a rectifier, which converts the latter into DC current. Pure distilled water is necessary to replace the dissociated water in the cells constantly. If the leakage within the cell is negligible, excellent results are obtained relating to the input of current and the output of hydrogen gas.

When direct current is passed through water, hydrogen is deposited and discharged at the negative electrode(cathode) and oxygen is deposited and discharged at the positive electrode (anode). As pure water is a poor conductor of electricity, acid alkalis or salts will have to be added to this water to increase the conductivity. In industry, sodium hydroxide or potassium hydroxide is used to carry

the current. The conductivity of the solution varies with the concentration and temperature and the most effective solution is chosen to give the maximum conductivity at a particular operation temperature of the battery and hence the minimum voltage. The potential and over voltage of the anode and cathode affect the total voltage of the cell. These represent the energy required to discharge oxygen and hydrogen at the positive and negative electrodes respectively. By judicious selection of materials of construction, the voltage of the cell could be kept to a minimum.

The theoretical voltage required to dissociate water is 1.23 V so that 100% current efficiency at this voltage will mean utilisation of 78.8 KwHr of direct current to produce 1000 standard Cft. of hydrogen with 500 standard Cu.ft. of oxygen gas. In industrial practice, however, a voltage of 2 per cell is common. This would mean that approximately 145 KwHr would be required to produce 1000 standard Cft. of hydrogen. Maximum voltage tolerated is 2.5 per cell at which point the electrolyte is usually replaced.

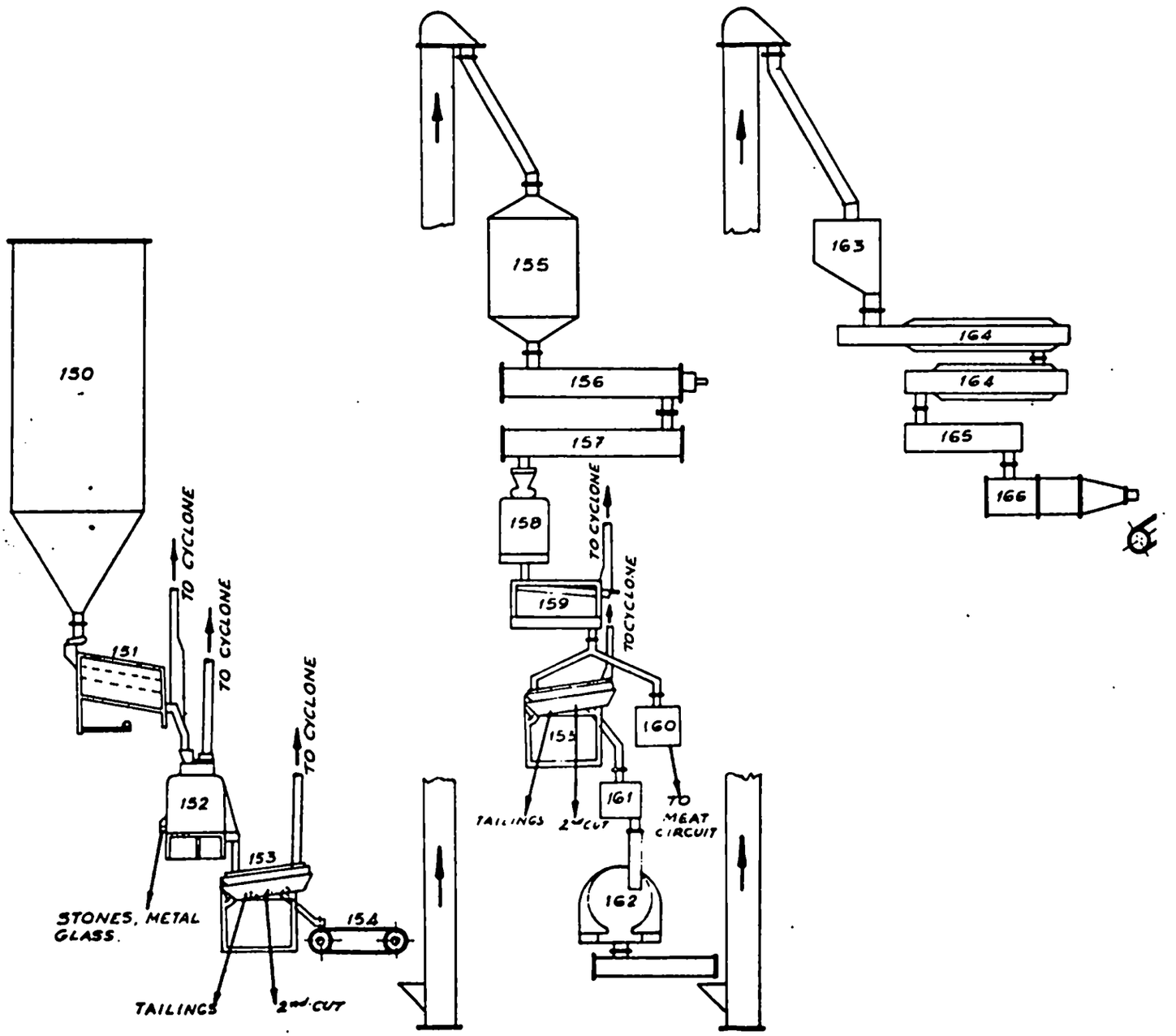
150
151
152
153
154
155
156
157
158
159
160
161
162
163
164
164
165
166
TO CYCLONE
TO CYCLONE
TO CYCLONE
TO CYCLONE
TO CYCLONE
STONES, METAL GLASS.
TAILINGS
2nd CUT
TAILINGS
2nd CUT
TO MEAT CIRCUIT

FLOWSHEET FOR FULL FAT SOY-FLOUR PROCESS

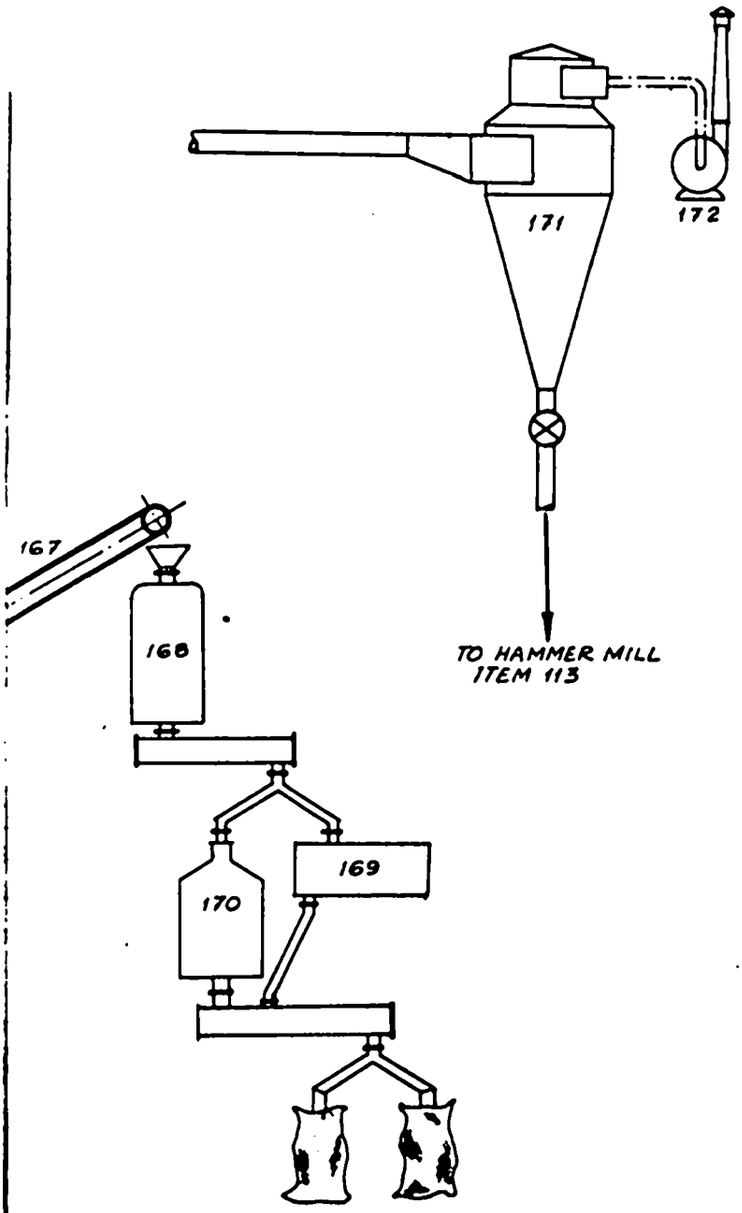

172	BLOWER
171	CYCLONE
170	ROLLER MILL
169	CRUMBLER
168	COOLER
167	CONVEYOR
166	HIGH TEMPERATURE COOKING EXTRUDER
165	HIGH SPEED MIXER
164	STEAM JACKETTED PRECONDITIONER
163	STORAGE BIN
162	HAMMER MILL
161	MEATS
160	HULLS
159	SHAKER SEPARATOR
158	CRACKER
157	COOLER
156	DRIER
155	SURGE BIN
154	MAGNETIC DRUM
153	GRAVITY SEPARATOR
152	DESTONER
151	CLEANER
150	DAY BIN

SERVOTECH

POST BOX: 6073
BOMBAY~5 (BR)

DRG. NO. FLS:FLF 88

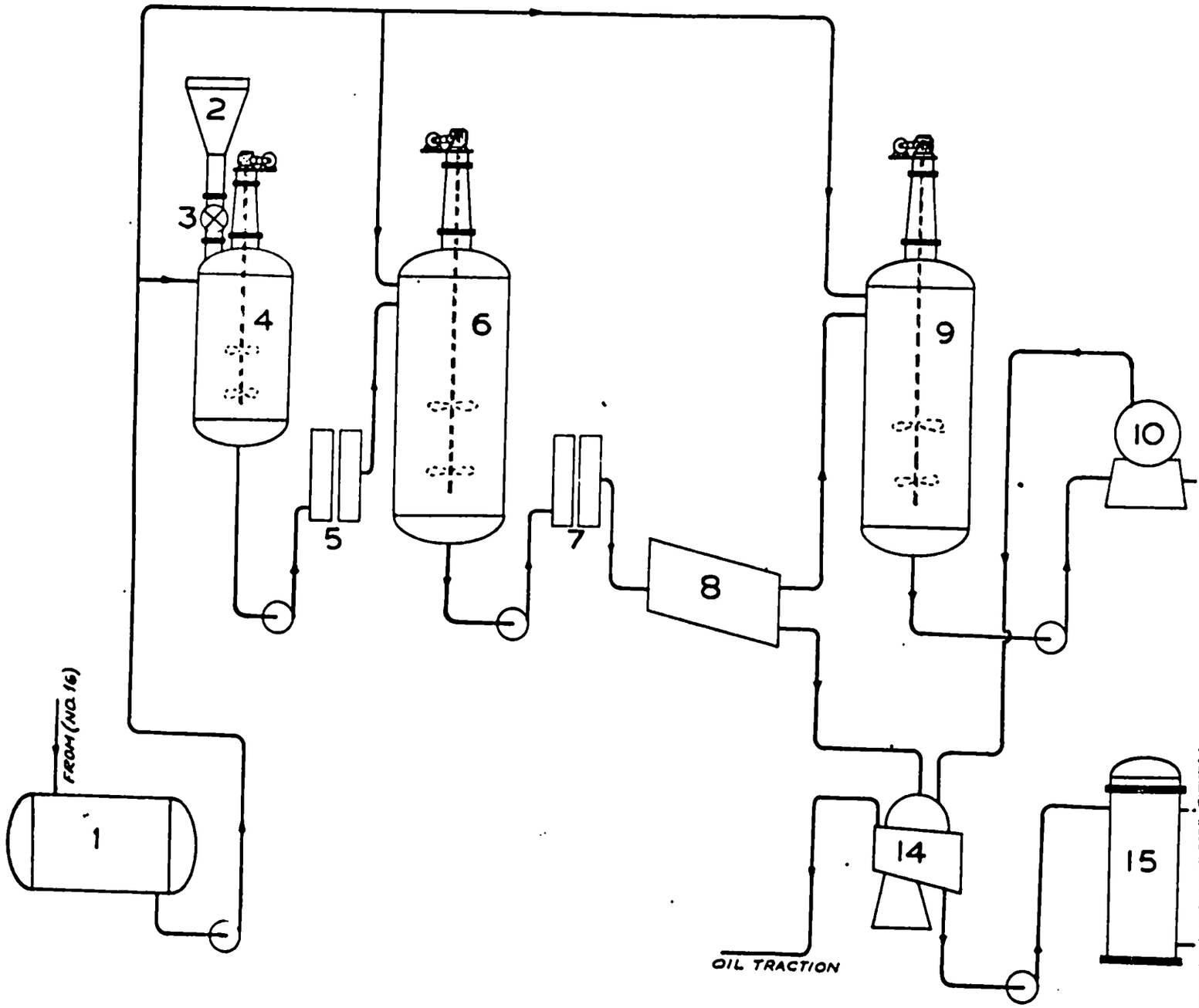
2
3
4
5
6
7
8
9
10
1
FROM (NO. 16)
14
15
OIL TRACTION

FLOWSHEET FOR THE MANUFACTURE OF PROTEIN CONCENTRATE

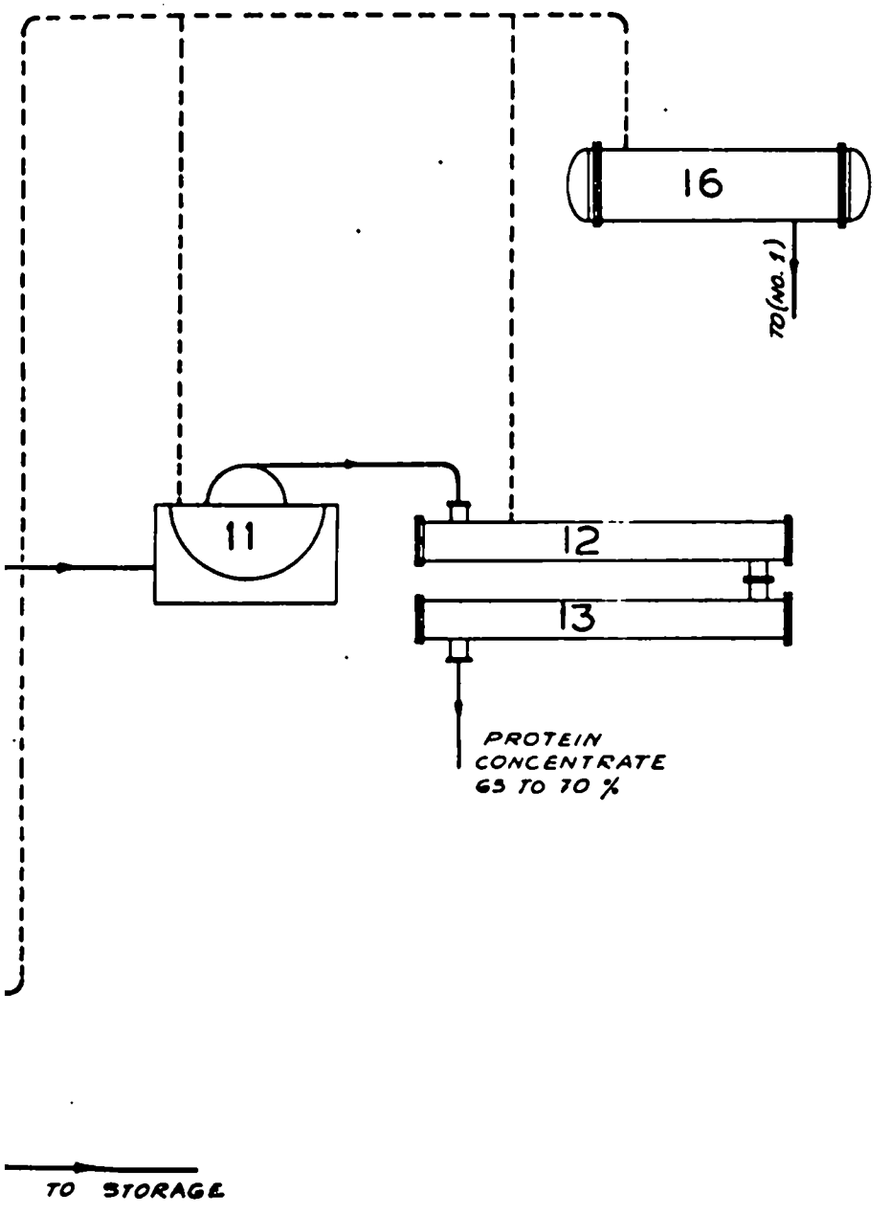

16	CONDENSER
15	CONCENTRATOR
14	DISC CENTRIFUGE
13	DRYER
12	DRYER
11	DRUM FILTER
10	HYDROCLONE
9	WASH TANK
8	REEL
7	DISC MILL
6	SETTLING TANK
5	DISC MILL
4	STEEP TANK
3	ROTARY VALVE
2	BIN FOR DEFATTED MEAL
1	AQUEOUS ALCOHOL RECEIVER

SERVOTECH POST BOX 6073 BOMBAY ~ 5 (BR)

DRG. NO. FLS:PCN 78

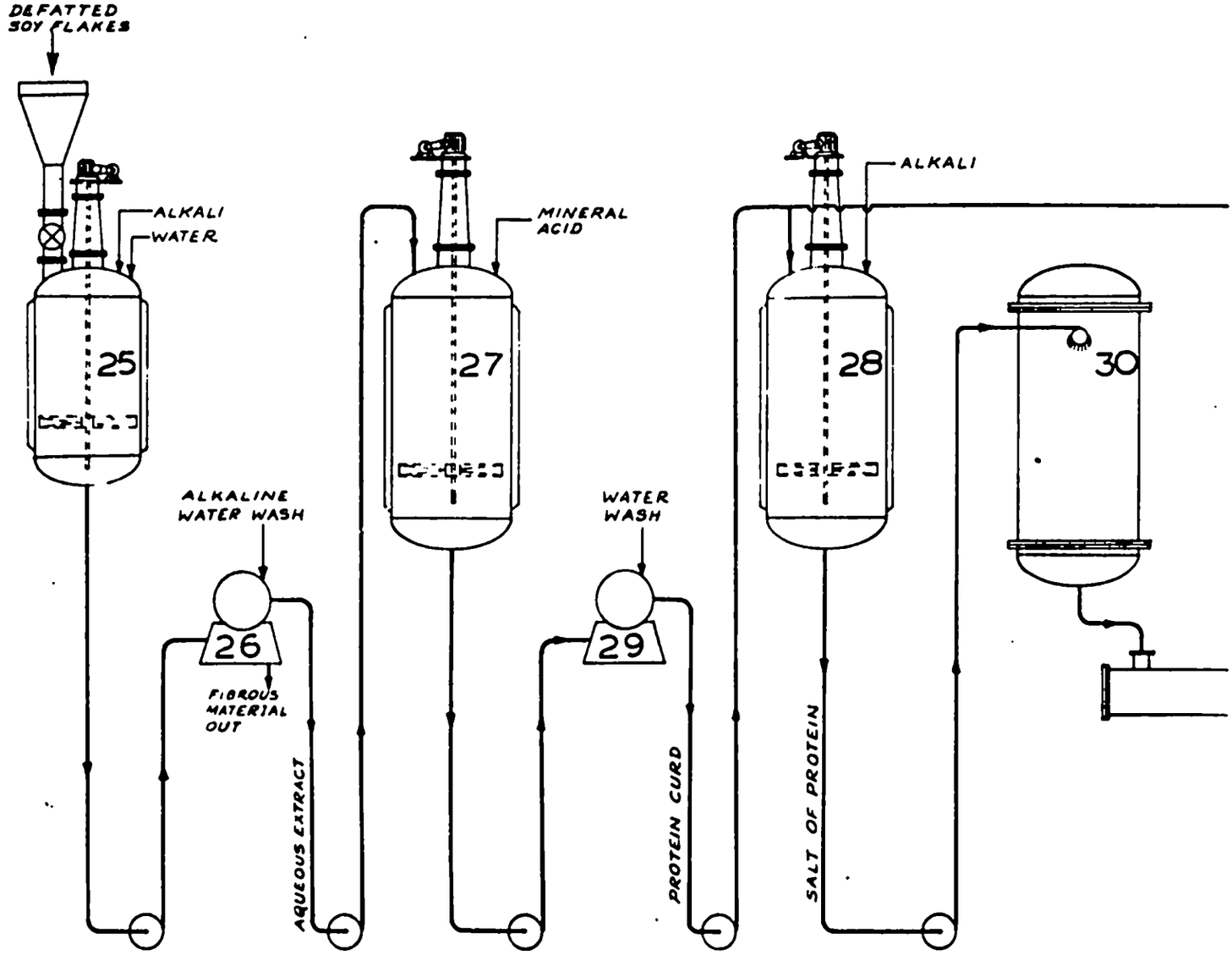
DEFATTED SOY FLAKES
ALKALI
WATER
25
ALKALINE WATER WASH
26
FIBROUS MATERIAL OUT
AQUEOUS EXTRACT
MINERAL ACID
27
WATER WASH
29
PROTEIN CURD
ALKALI
28
SALT OF PROTEIN
30

FLOWSHEET FOR PROTEIN ISOLATES

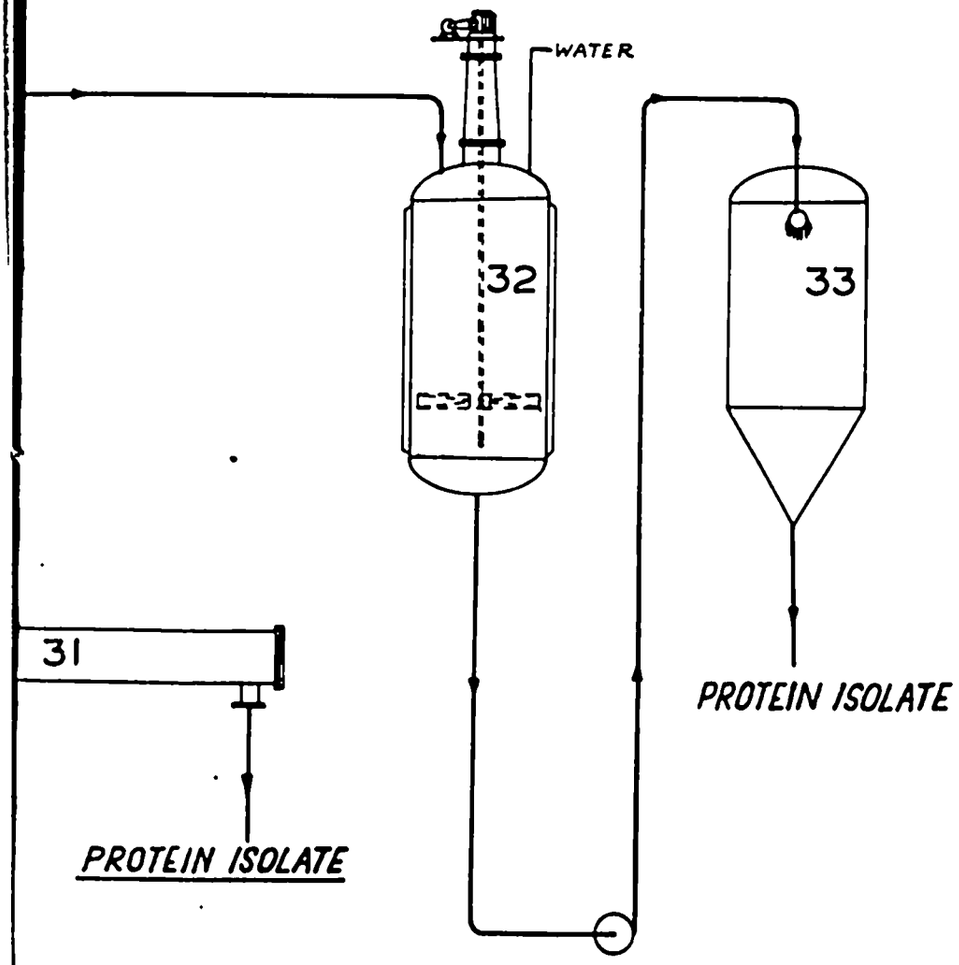

33	SPRAY DRYER
32	SLURRY TANK
31	DRYER
30	EVAPORATOR
29	DRUM FILTER
28	ALKYLATION TANK
27	ACIDIFICATION TANK
26	DRUM FILTER
25	EXTRACTOR

SERVOTECH
POST BOX 6073
BOMBAY-5(BR)

DRG.NO. FLS:PIS 101

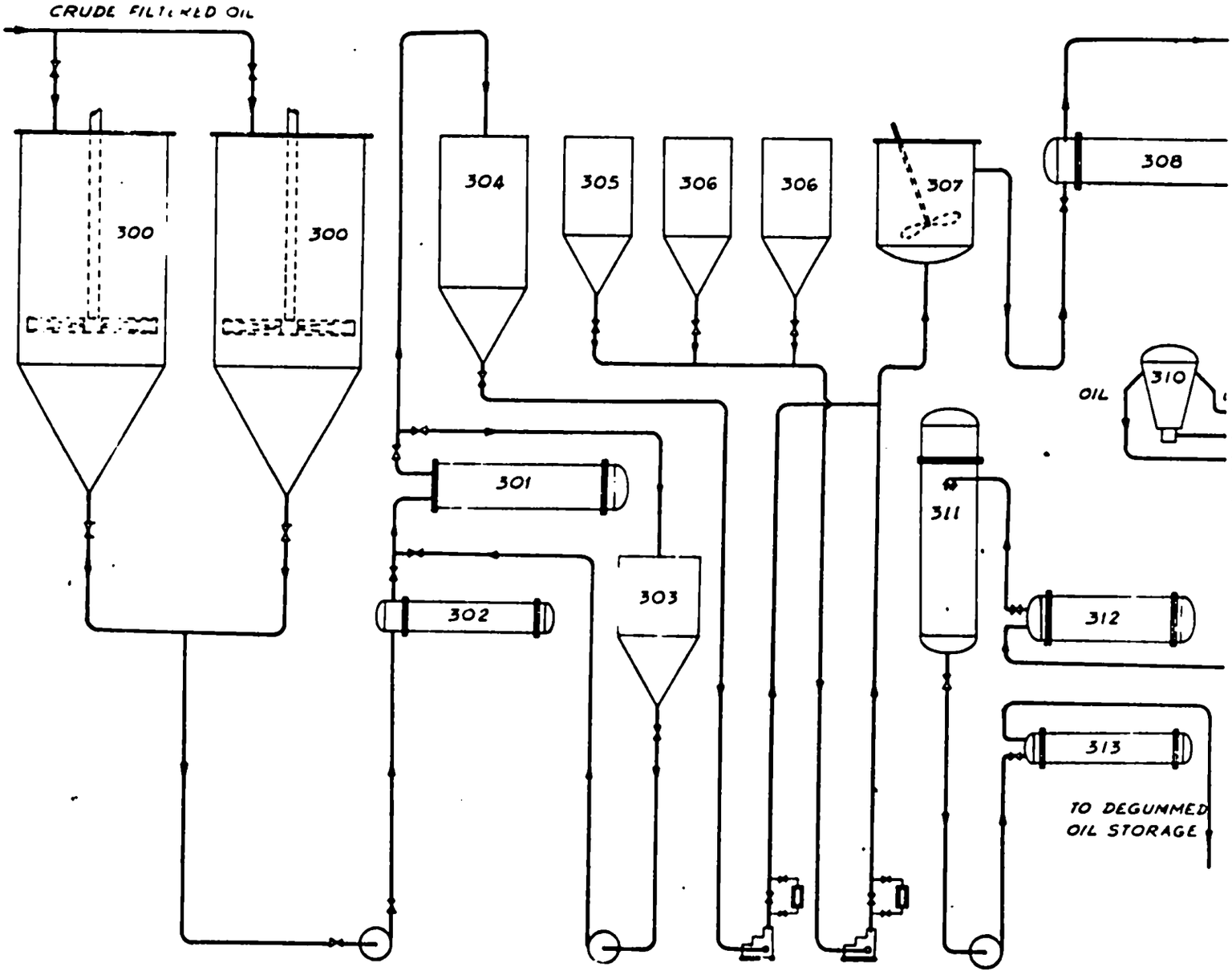
CRUDE FILTERED OIL
300
300
304
305
306
306
307
308
310
OIL
301
302
303
311
312
313
TO DEGUMMED
OIL STORAGE

FLOWSHEET OF DEGUMMING & LECITHIN RECOVERY PLANT

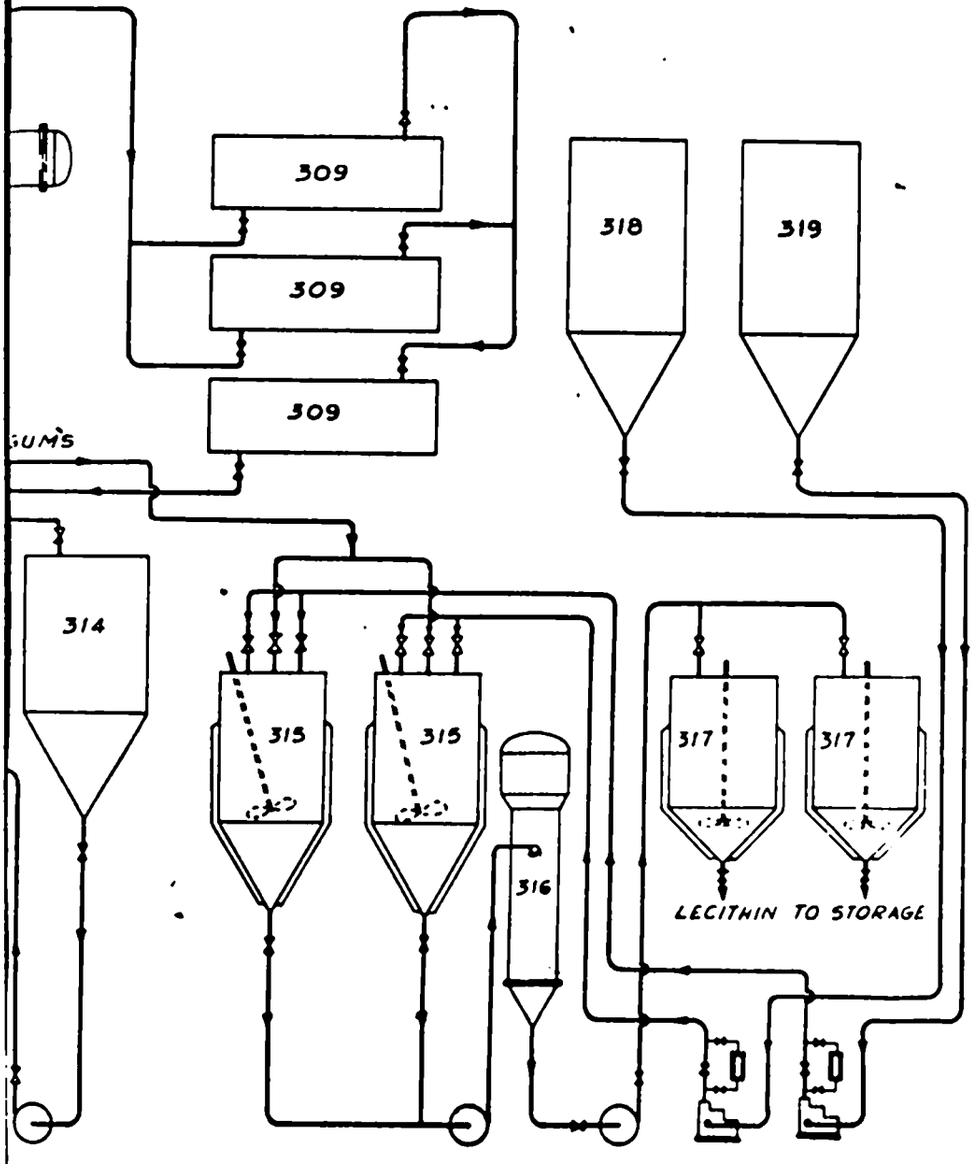

319	FATTY ACIDS TANK
318	REAGENT TANK I
317	PRODUCT TANK
316	GUM DRIER
315	WET GUMS TANK
314	OIL TANK
313	COOLER
312	HEATER
311	OIL DRIER
310	CENTRIFUGE
309	RETENTION TANK
308	HEATER
307	MIXER
306	REAGENT TANKS
305	DISTILLED WATER TANK
304	SURGE TANK
303	PRE COAT TANK
302	HEATER
301	FILTER
300	CRUDE OIL DAY TANK

SERVOTECH

POST BOX: 6073
BOMBAY-5 (BR)

DRG. NO. FLS:DGM 87

Flowsheet For Continuous Vanaspati Manufacturing Proces

Capacity 50 tons/24hrs Of Vanaspati

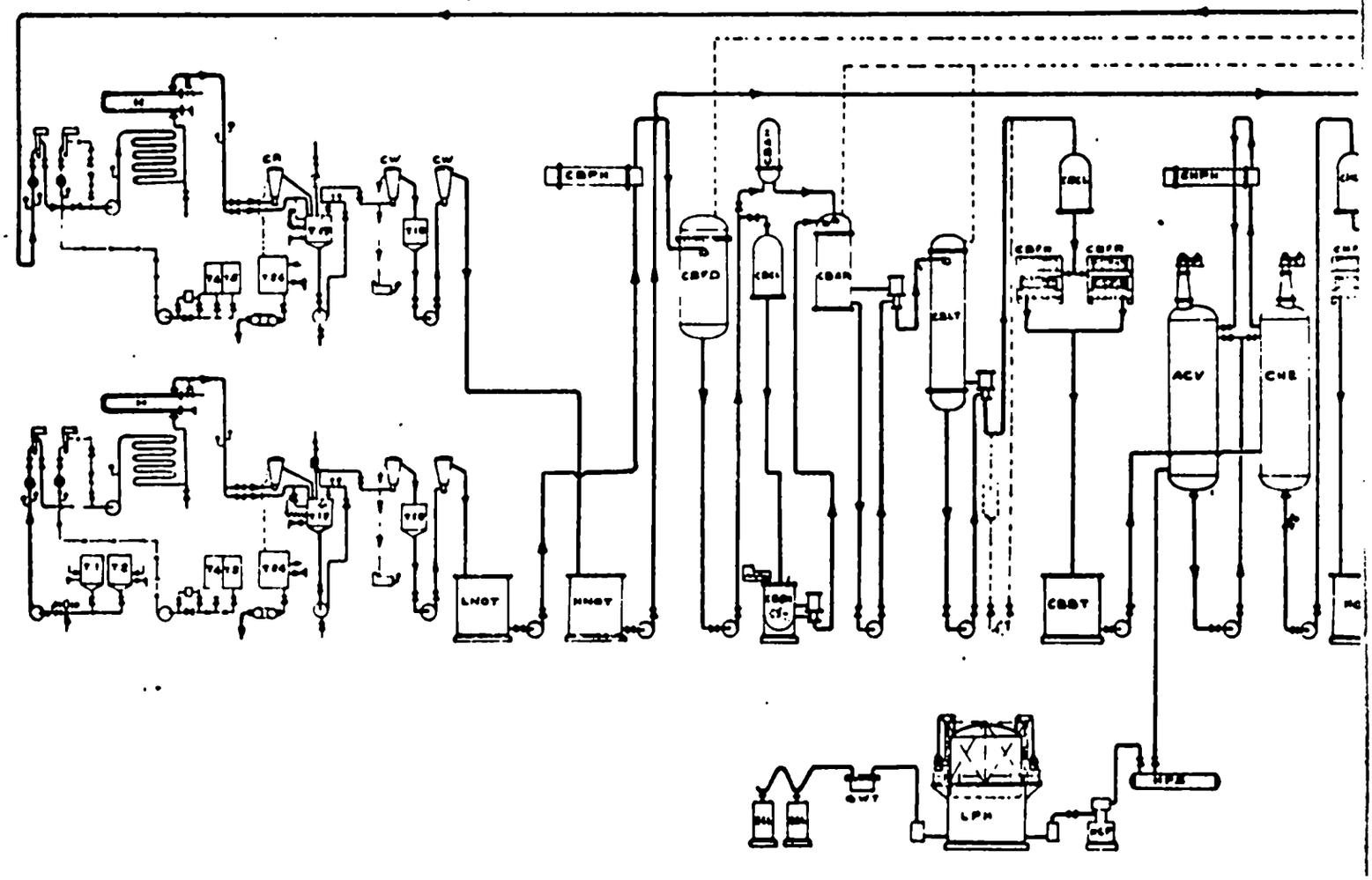

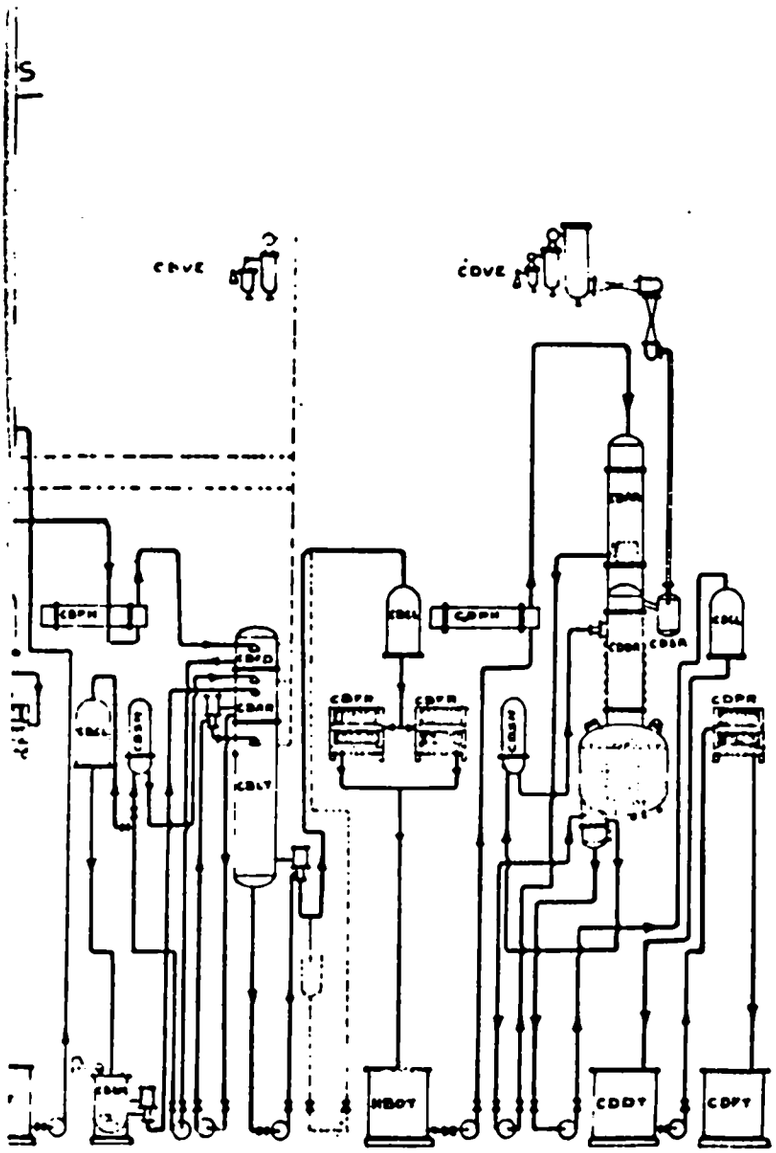

CR	REFINING CENTRIFUGE	CHCL	COOLER
CW	WASH WATER CENTRIFUGE	CHFR	FILTER PRESS
H	HEATER	HOT	HARD OIL TANK
T1 T2	CRUDE OIL TANK	HNOT	HARD NEUTRAL OIL TANK
T4 T5	REFINING REAGENT TANK	HBOT	HARD BLEACHED OIL TANK
T24	SOAP STOCK TANK	LDPH	PRIMARY HEATER
T17 T18	WASH WATER AGITATOR TANK	CDAR	DEAERATOR
LNOT	LIQUID NEUTRAL OIL TANK	CDSH	SECONDERY HEATER
CBPH	PRIMARY HEATER	CDDH	DEODORISER
CBFD	FLASH DRYER	CDSR	RECEIVER SEPARATOR
CBSH	SECONDARY HEATER	CDVE	HIGH VACUUM EQUIPMENT
CBAR CBLT	DEAERATOR BLEACHER	CDCL	COOLER
CBVE	BLEACHER VACUUM EQUIPMENT	CDDT	DROP TANK
CBCL	COOLER	CDFR	FILTER PRESS
CBSH	SLURRY MIXER	CDFT	FINISHED OIL TANK
CBFR	FILTER PRESS	HPS	HYDROGEN GAS STORAGE CYLINDER
CBBT	BLEACHED OIL TANK	HCP	HYDROGEN GAS COMPRESSOR
CHE	HEAT EXCHANGER	LPH	GAS HOLDER FOR HYDROGEN
CHPH	PRIMARY HEATER	GWT	GAS WASHING TANK
ACV	AUTO CLAVE	ECL	ELECTROLYTIC CELLS

SERVOTECH

Pos: Box 6073
Bombay-5 BR

DRG NO
FLS.VNP 77

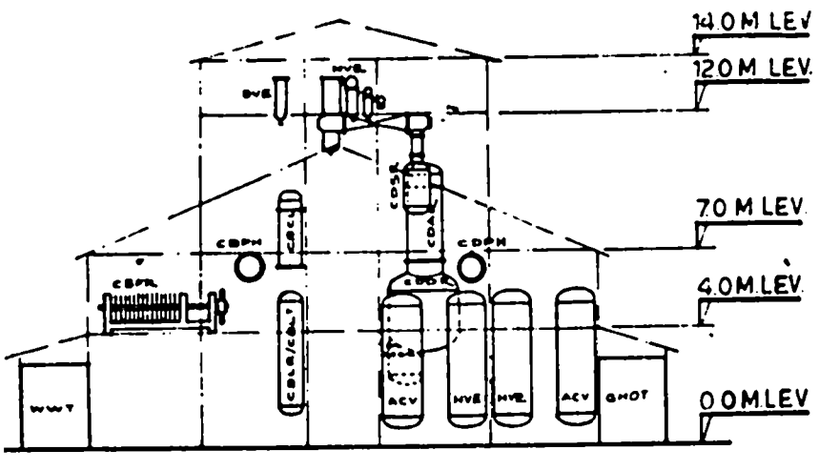

ELEVATION.

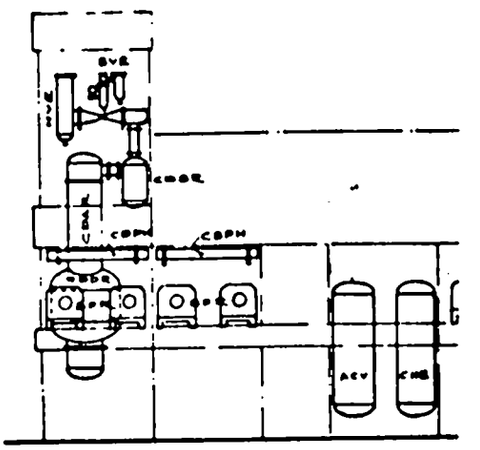

END ELEV.

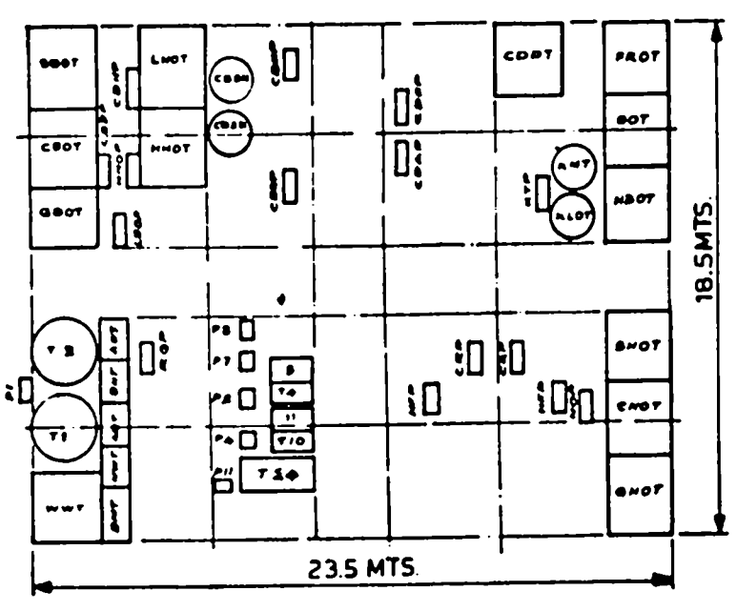

PLAN AT 0.000 M LEVEL.

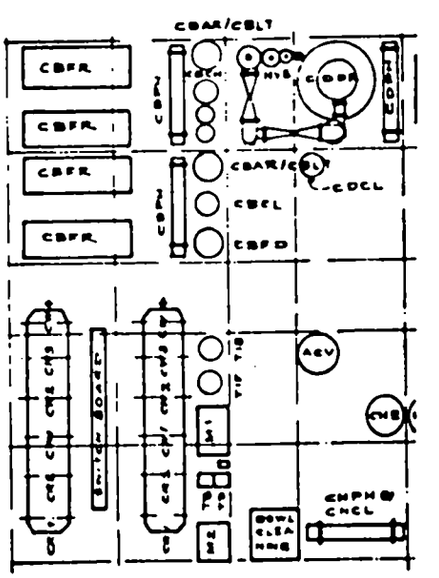

PLAN AT 4.000M.LEVEL

TYPICAL LAYOUT OF
VANASPATI MANUFACTURING PLANT.

Capacity 50 tons/hr of Vanaspati

CW	WASH WATER CENTRIFUGE.	CBFD	FLUSH DRYER
CR	REFINING CENTRIFUGE.	CBSH	SECONDARY HEATER.
T6, T9	REFINING REAGENT TANKS	CBAR/CBLT	DEAERATOR BLEACHER.
T1, T2	CRUDE OIL TANKS.	CBVE	BLEACHER VACUUM EQUIPMENT.
T10, T11	FLUSH LYE TANKS.	CBCL	COOLER
T24	SOAP STOCK TANK.	CBSM	SLURRY MIXER.
T8, T9	CITRIC ACID TANKS	CBFR	FILTER PRESS.
T17, T18	WASH WATER AGITATOR TANK.	CHPH	PRIMARY HEATER.
EMT	EMULSION TANK.	CHE	HEAT EXCHANGER.
HWT	HOT WATER TANK.	CHCL	COOLER.
AMT	ALKALI MIXING TANK.	CBFR	FILTER PRESS.
BHT	BRINE HOLDING TANK.	HOT	HARD OIL TANK
ADT	ALKALI DISSOLVING TANK.	HNOT	HARD NEUTRAL OIL TANK.
LNOT	LIQUID NEUTRAL OIL TANK.	HBOT	HARD BLEACHED OIL TANK.
CBPH	PRIMARY HEATER.	M1, M2	MIXERS
CDPH	PRIMARY HEATER.	CDVE	HIGH VACUUM EQUIPMENT.
CDAR	DEAERATOR.	CDCL	COOL.
CDSH	SECONDARY HEATER.	CDFR	FILTER PRESS.
CDDN	DEODORIZER.	CDDT	DROP TANK.
CDSR	RECEIVER SEPARATOR.	CDFT	FINISHED OIL TANK.

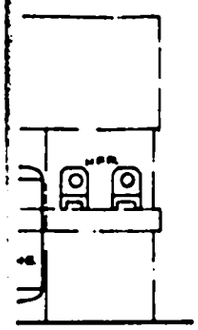

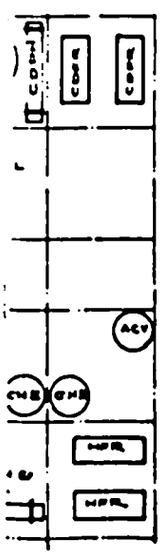

SERVOTECH

POST BOX 6073
BOMBAY 5 BR.

DRG. NO.
LOT: VNP-82.

VEL

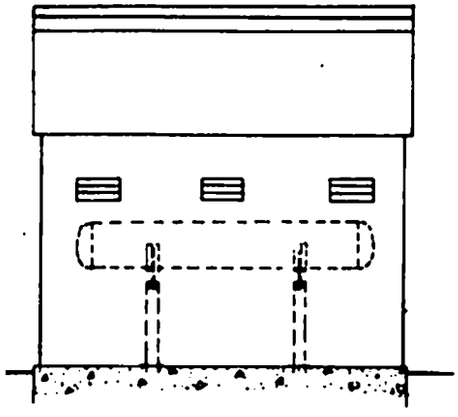

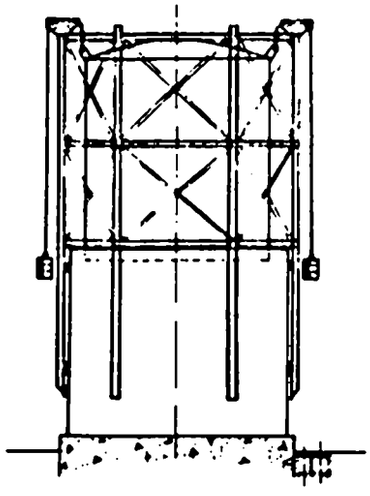

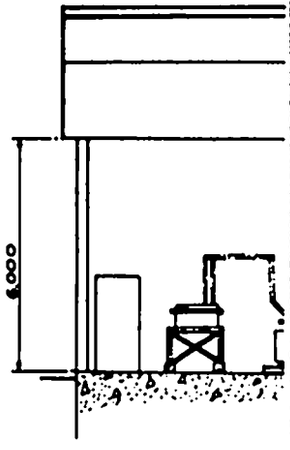
6,000

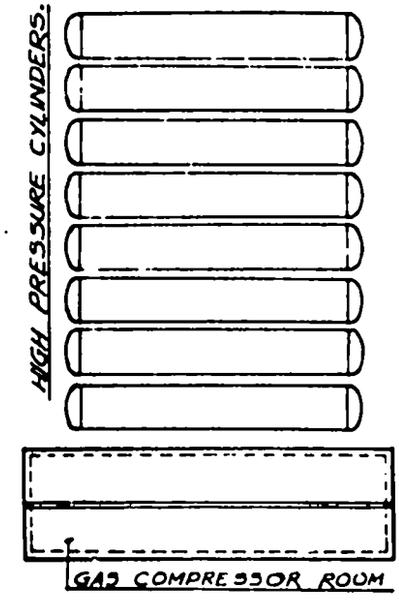
HIGH PRESSURE CYLINDERS.
GAS COMPRESSOR ROOM

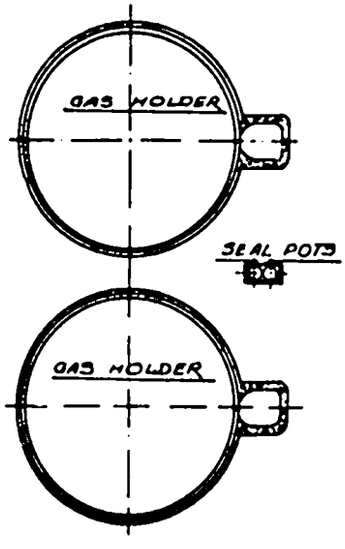
GAS HOLDER
SEAL POTS
GAS HOLDER

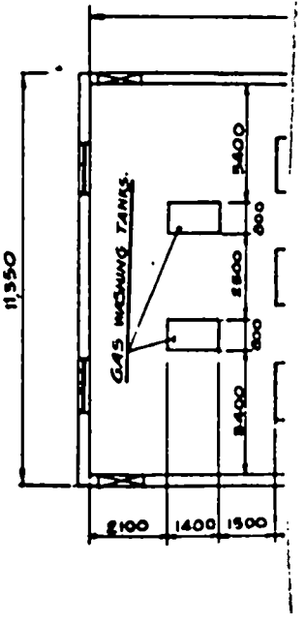
11,350
GAS WASHING TANKS.
2400
800
2800
800
2400
2100
1400
1500

Typical Lay-out Of Hydrogen Gas Section.

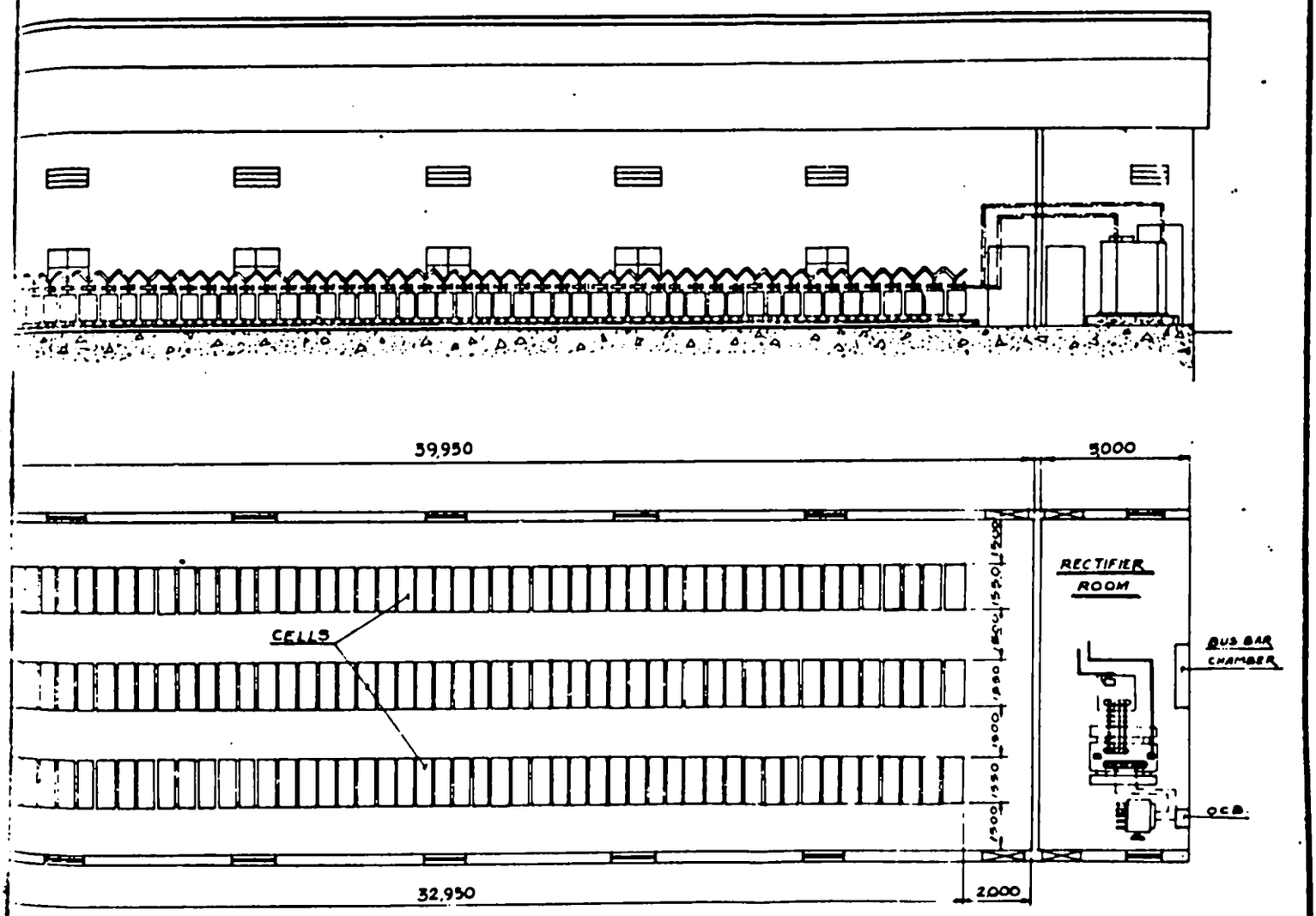

SERVOTECH

POST BOX: 6075
BOMBAY: 5 (BR)

DRG. NO. | LOT: HGS: 83.