AGENCY FOR INTERNATIONAL DEVELOPMENT
WASHINGTON, D. C. 20523

BIBLIOGRAPHIC INPUT SHEET

FOR AID USE ONLY
Batch 66

1. SUBJECT CLASSIFICATION

A. PRIMARY: Food production and nutrition — AA50-0000-0000

B. SECONDARY: Research

2. TITLE AND SUBTITLE

Organization and management of agricultural research systems

3. AUTHOR(S) (100) Moseman,A.H.; Ulbricht,T.L.V.; Pastore,Jose; Alves,E.R.A.; Sehgal,S.M.; Pinstrup-Andersen,Per; Franklin,David; Shumway,C.R. (101) Conf.on Resource Allocation and Productivity in National and Int.Agr.Research,Airlie House,Va.,1975

4. DOCUMENT DATE	5. NUMBER OF PAGES	6. ARC NUMBER
1977	101p.	ARC

7. REFERENCE ORGANIZATION NAME AND ADDRESS

ADC

8. SUPPLEMENTARY NOTES (Sponsoring Organization, Publishers, Availability)

(In Resource allocation and productivity in national and int.agr.research,ed.by T.M.Arndt,D.G.Dalrymple,and V.W. Ruttan,p.367-457)

9. ABSTRACT

The fourth section of the Airlie House conference of 1975 is devoted to issues bearing directly on the organization and management of agricultural research systems. The first paper (by Albert H. Moseman) outlines the evolution of coordinated national research projects for improving food crop production. Two papers focus on the problem of reorganizing and reforming national research systems: in the United Kingdom (by Tilo L.V. Ulbricht) and in Brazil (by Jose Pastore and Eliseu R.A. Alves). Next, the contribution of private sector international agricultural research is described (by S.M. Sehgal), based on the experience of Pioneer Hi-Bred International. A systems approach to research resource allocation is outlined and evaluated (by Per Pinstrup-Anderson and David Franklin). The final chapter in this section (by C. Richard Shumway) presents a review and evaluation of the literature on formal modes and methods for allocating resources in research.

10. CONTROL NUMBER: PN-AAE-272

11. PRICE OF DOCUMENT

12. DESCRIPTORS

Allocations
Brazil
Contractors
Management
Models
Private enterprise
Project planning
Systems analysis

13. PROJECT NUMBER

14. CONTRACT NUMBER: CSD-2813 GTS

15. TYPE OF DOCUMENT

AID 590-1 (4-74)

THIS DOCUMENT HAS BEEN EVALUATED AS SUBSTANDARD COPY FOR ROUTINE REPRODUCTION. EFFORTS IN AID/W TO OBTAIN A MORE ACCEPTABLE COPY OF THE DOCUMENT HAVE NOT BEEN SUCCESSFUL. DESPITE THIS DISADVANTAGE, WE HAVE CHOSEN TO REPRODUCE THE DOCUMENT BECAUSE OF THE SUBJECT TREATED AND TO MAKE THE DISCERNIBLE INFORMATION AVAILABLE.

CSD-2813 GTS · ADC
PN-AAE-272

Resource Allocation and Productivity in National and International Agricultural Research

Thomas M. Arndt
Dana G. Dalrymple
and
Vernon W. Ruttan
Editors

UNIVERSITY OF MINNESOTA PRESS, MINNEAPOLIS

Preface

Within the last decade significant steps have been taken to narrow the agricultural technology gap among countries. New international agricultural research centers have been established, and a number of developing countries have made substantial progress in strengthening their national agricultural research capacities. It is estimated that world expenditures on agricultural research (in constant 1971 U.S. dollars) have risen from approximately $1.3 billion in 1959 to $3.8 billion in 1974. In the less developed countries of Latin America, Africa, and Asia, the estimated increase in research expenditures for the same period was from $141 million to $957 million.

The creation of two international agricultural research institutes in the early 1960s was an important factor in this surge of research investment. The establishment of the International Rice Research Institute (IRRI) in the Philippines in 1960 and the International Maize and Wheat Improvement Center (CIMMYT) in Mexico in 1966 signaled a wider contemporary refocusing on research as an essential instrument of agricultural productivity change in the less developed countries (LDC's).

The ensuing story is well known. CIMMYT and IRRI developed short-strawed, fertilizer-responsive, high-yielding wheat and rice varieties which were rapidly adapted and adopted in parts of Asia, Africa, and Latin America and which produced an upsurge in grain production popularly known as the "green revolution." By 1975, nine international research institutes and two other international programs were either in operation or in the process of being established in the LDC's (see Table 11-1).

The view that effective research capacity in developing countries is a primary means to raising agricultural productivity is now widely shared. The World Bank, the United States Agency for International Development (USAID), and other donors have begun to give agricultural research a higher priority for assistance. Investment in agricultural research in developing countries has grown rapidly in recent years. As the agricultural research system has continued to expand, research productivity and research resource allocation have become important issues for development planners and science managers.

In order to examine these issues, an international conference was held at Airlie House, Virginia, in January 1975. The conference had two main objectives: to examine recent evidence on the returns to investment in national and international agricultural research systems; and to explore the relevance of social and economic factors for the organization and management of national and international research systems. Technical issues related to the measurement of research productivity, the planning of research programs, and the management of research systems were also discussed.

The conference drew together over fifty natural scientists, social scientists, and administrators from national and international research agencies, some of whom wore more than one hat. The format of the conference was somewhat unusual. Individual papers were not read but rather circulated before the meeting and orally summarized at the conference by preselected discussants, several of whose commentaries proved so stimulating and original that they are included in this volume (chapters 26 and 27). Most of the conference, therefore, was devoted to what turned out to be a rich and vigorous discussion.

Following the conference, contributors were asked to review and revise their papers in the light of the discussions. The revised papers were then edited and returned to the authors for their further review, a painstaking process which was completed in November 1975. As they appear in this book, the twenty-eight papers have been organized into six sections. They are preceded by an introduction (by Thomas M. Arndt and Vernon W. Ruttan) which highlights the main issues discussed at the conference.

The first section of this book is devoted to a series of studies of the *productivity of national research systems* in both developed and less developed countries. There are two papers on the organization and productivity of research systems in developed countries: the first (by Yujiro Hayami and Masakatsu Akino) describes the national-prefectural system in Japan; the second (by Willis L. Peterson and Joseph C. Fitzharris) discusses the federal-state system in the United States. There are also two papers on returns to investment in agricultural research in developing countries, one drawing upon Colombian experience (by Reed Hertford, Jorge Ardila, Andrés Rocha, and Carlos Trujillo) and one focusing upon India (by A. S. Kahlon, P. N. Saxena, H. K. Bal, and Dayanath Jha). The final paper in this section (by Reed Hertford and

Andrew Schmitz), prepared after the conference, reviews some of the theoretical foundations of, and empirical considerations involved in, the evaluation of returns to research.

The second section includes three papers on the *productivity of international research systems*. The first paper (by Dana G. Dalrymple) documents the impact of the CIMMYT and IRRI varietal development programs on wheat and rice production in Asia. A second paper (by Robert E. Evenson) reviews the history of cycles in research productivity and in international diffusion patterns for three commodities: sugarcane, wheat, and rice. A third paper (also by Evenson) presents measures of the rates of return to the resources invested in research at IRRI and CIMMYT. In a fourth paper (by Yoav Kislev) an attempt is made to develop a theoretical model of applied research consistent with the historical experience reviewed in the earlier papers in the first two sections.

The third section is devoted to the *organization and development of the international agricultural research institute system*. The first chapter (by J. G. Crawford) traces the development of a system for organizing, funding, and managing the new institutes, spearheaded by the Ford and Rockefeller foundations and now guided by the Consultative Group on International Agricultural Research. The programs that have been developed to achieve closer articulation of the research programs of the international and national systems are outlined by the director of IRRI (Nyle C. Brady) and the director of CIMMYT (Haldore Hanson). The problem of establishing effective working relationships between the international and national agricultural research systems is then reviewed (by Sterling Wortman). The final paper in this section (by Burton E. Swanson) presents a comparison of the impact of the IRRI and CIMMYT training programs on the career patterns and effectiveness of young scientists who have studied at these two institutes.

The fourth section is devoted to issues bearing directly on the *organization and management of agricultural research systems*. The first paper (by Albert H. Moseman) outlines the evolution of coordinated national research projects for improving food crop production. Two papers focus on the problem of reorganizing and reforming national research systems: in the United Kingdom (by Tilo L. V. Ulbricht) and in Brazil (by José Pastore and Eliseu R. A. Alves). Next, the contribution of private sector international agricul ural research is described (by S. M. Sehgal), based on the experience of Pioneer Hi-Bred International. A systems approach to research resource allocation is then outlined and evaluated (by Per Pinstrup-Andersen and David Franklin). The final chapter in this section (by C. Richard Shumway) presents a review and evaluation of the literature on formal models and methods for allocating resources in research.

The fifth section examines the role of *economic and social factors in re-*

search resource allocations. The first paper (by Martin E. Abel and Delane E. Welsch) outlines a theoretical model for exploring the relative effects of environmental constraints and commodity mix on research resource allocation. The second paper (by John W. Mellor) is devoted to an empirical evaluation of the effects of efforts to relate research resource allocation to alternative goals such as labor absorption. In a third paper (by J. P. Ramalho de Castro and G. Edward Schuh) the use of an economic model to establish research priorities, based on Brazilian data, is illustrated. The role of resource endowments and relative prices in inducing the choice of alternative paths of technical change – that is, labor saving versus land saving – is documented (by Hans P. Binswanger). The final paper in this section (by Alain de Janvry) presents a theoretical model of dialectical interaction between technical and institutional change in agriculture which suggests important directions for future research.

The final section is devoted to discussion of the research strategy and management issues that will affect *the future of the international research system* and the productivity of national research systems. The first paper (by A. T. Mosher) is devoted to a discussion of unresolved issues in the evaluation of the international system. A second essay (by Theodore W. Schultz) focuses on the role of economic policy in influencing the prospects for gains from agricultural research. In the final paper (by J. G. Crawford) the policies and problems facing the Consultative Group on International Agricultural Research and its Technical Advisory Committee in their efforts to strengthen national and international research are reviewed.

The papers included in this volume cannot, of course, reflect fully the excitement and challenge of the Airlie House conference. Particularly significant contributions to the discussions were made also by Richard Baldwin of Cargill Inc.; Joel Bernstein of the U.S. Agency for International Development; John K. Coulter of the Consultative Group on International Agricultural Research; George Darnell, James M. Fransen, Raj Krishna, and Montague Yudelman of the World Bank; M. McDonald Dow of the National Academy of Sciences; Walter L. Fishel of the U.S. Department of Agriculture; Lowell S. Hardin of the Ford Foundation; W. David Hopper of the International Development Research Centre; Richard Nelson of Yale University; Peter Oram of the Food and Agriculture Organization of the United Nations; S. J. Webster of the Ministry of Overseas Development of the United Kingdom; A. M. Weisblat of the Agricultural Development Council, Inc.; and F. R. Wittnebert of the Parker Pen Co.

The Airlie House conference was given considerable impetus and background by the materials presented and discussed at an earlier symposium on Resource Allocation in Agricultural Research held at the University of Minne-

sota in February 1969. The results of the Minnesota conference, which focused on many of the same issues considered at Airlie House but from a domestic (United States) viewpoint, were published in a book edited by Walter L. Fishel and entitled *Resource Allocation in Agricultural Research* (Minneapolis: University of Minnesota Press, 1971).

Both the Minnesota and Airlie House conferences were oriented to formal research carried out at nonprofit institutions and supported primarily with public or philanthropic funds and, to a lesser extent, to research conducted by private firms. It is recognized, however, that significant technical improvements may also result from informal research by farmers themselves or by small, local firms. Simple selection of improved varieties of seeds has traditionally been an important source of varietal development and yield increase. In the field of mechanical technology, simple but effective mechanical devices invented by farmers or mechanics, such as small irrigation and cultivation equipment, continue to provide many of the models for equipment engineered, manufactured, and marketed by larger firms. The work of both national and international research programs in many cases builds on this indigenous technology. Thus while little is said about informal research in this volume, its potential importance should not go unrecognized.

The structure of public agricultural research differs somewhat between the developed and the less developed nations. In the developed countries, research is conducted both by ministries (or departments) of agriculture and by colleges and universities. In the developing nations, research has traditionally been much more strongly concentrated in specialized arms of the ministries of agriculture or in autonomous, commodity-oriented research institutes. Colleges of agriculture in developing countries have usually concentrated on teaching, although in some cases they have done significant research (the popular rice variety C4-63, for instance, was developed by the College of Agriculture at the University of the Philippines) and may well play a larger role in the future. A paper on "Articulation of the International System with Other Regional Organizations: Ministry and University," by Jose Drilon was originally scheduled for the conference, but unfortunately Dr. Drilon, for reasons beyond his control, was unable to prepare the paper or to participate in the discussions.

We would also like to emphasize that, while this volume focuses on the importance of improved technology in the process of agricultural development, we are quite aware that it is not the only factor. A host of other forces – social, institutional, economic, and technical – both influence the adoption of technology and set the stage for the complex of other changes which must take place in the process of agricultural and economic development. Although improved technology may be the key factor in some societies, in others it may

not. Improved technology alone is clearly not tantamount to agricultural development. But if the proper forms of technology can be efficiently generated through research, the development process can often be facilitated. It is our hope that this volume will contribute to a better understanding of the role of research in the process of technical change and of the role of technical change in agricultural development.

The conduct of the Airlie House conference and the preparation of this volume have been possible only through the help of many individuals and several institutions. The conference planning committee consisted of Robert E. Evenson, Walter L. Fishel, and Vernon W. Ruttan. The conference was sponsored by the Agricultural Development Council under its Research and Training Network Program, a program which, in turn, is funded under a contract with the United States Agency for International Development. Additional support for international participation in the conference was provided by the World Bank.

Turning a set of conference papers by an international cast into a book is, as we learned, far from a quick or simple job. Our task was facilitated by the cooperation and forbearance of the individual authors, most of whom found their carefully revised papers further edited and trimmed. Virginia O. Locke played a key role in the copy editing; her professional skills and contributions were of great assistance. We would also like to express our appreciation to Willis L. Peterson for his review of technical portions of the final page proofs and to Raymond D. Vlasin for his very helpful review and evaluation of a preliminary draft of the conference proceedings manuscript.

Thomas M. Arndt
United States Agency for International Development
Colombo, Sri Lanka

Dana G. Dalrymple
United States Department of Agriculture and United States Agency for International Development
Washington, D.C.

Vernon W. Ruttan
The Agricultural Development Council, Inc.
New York and Singapore

January 1976

Contents

Introduction

1 Valuing the Productivity of Agricultural Research: Problems and Issues *Thomas M. Arndt* and *Vernon W. Ruttan* 3

Productivity of National Research Systems

2 Organization and Productivity of Agricultural Research Systems in Japan *Yujiro Hayami* and *Masahisa Akino* 29

3 Organization and Productivity of the Federal-State Research System in the United States *Willis F. Peterson* and *Joseph C. Kitchens* 60

4 Productivity of Agricultural Research in Colombia *Reed Hertford*, *Jorge Ardila*, *Andrés Rocha* and *Carlos Trujillo* 86

5 Returns to Investment in Agricultural Research in India *A. S. Kahlon*, *P. N. Saxena*, *H. K. Pal*, and *Dayanath Jha* 124

6 Measuring Economic Returns to Agricultural Research *Reed Hertford* and *Andrés Schmitz* 148

Productivity of International Research Systems

7 Evaluating the Impact of International Research on Wheat and Rice Production in the Developing Nations *Dana G. Dalrymple* 171

8 Cycles in Research Productivity in Sugarcane, Wheat, and Rice *Robert E. Evenson* 209

9 Comparative Evidence on Returns to Investment in National and International Research Institutions *Robert E. Evenson* 237

10 A Model of Agricultural Research *Yoav Kislev* 265

Organization and Development of the International Institute System

11 Development of the International Agricultural Research System *J. G. Crawford* 281

12 The International Rice Research Institute (IRRI) Outreach Program *Nyle C. Brady* 295

13 The International Maize and Wheat Improvement Center (CIMMYT) Outreach Program *Haldore Hanson* 306

14 Impact of International Research on the Performance and Objectives of National Systems *Sterling Wortman* 323

15 Impact of the International System on National Research Capacity: The CIMMYT and IRRI Training Programs *Burton F. Swanson* . . . 336

Organization and Management of Agricultural Research Systems

16 Coordinated National Research Projects for Improving Food Crop Production *Albert H. Moseman* 367

17 Contract Agricultural Research and Its Effect on Management *Tilo F. A. Ulbricht* 381

18 Reforming the Brazilian Agricultural Research System *José Pastore* and *Elsie R. A. Mello* 394

19 Private Sector International Agricultural Research: The Genetic Supply Industry *S. M. Sehgal* 404

20 A Systems Approach to Agricultural Research Resource Allocation in Developing Countries *Per Pinstrup-Andersen* and *David Franklin* 416

21 Models and Methods Used to Allocate Resources in Agricultural Research: A Critical Review *C. Richard Shumway* 436

Economic and Social Factors in Research Resource Allocation

22 Environmental Constraints, Commodity Mix, and Research Resource Allocation *Martin E. Abel* and *Delane E. Welsch* 461

23 Relating Research Resource Allocation to Multiple Goals
John W. Mellor 478

24 An Empirical Test of an Economic Model for Establishing Research Priorities: A Brazil Case Study *J. P. Ramalho de Castro* and *G. Edward Schuh* 498

25 Measuring the Impact of Economic Factors on the Direction of Technical Change *Hans P. Binswanger* 526

26 Inducement of Technological and Institutional Innovations: An Interpretative Framework *Alain de Janvry* 551

The Future of the International Research System

27 Unresolved Issues in the Evolution of the International System
A. T. Mosher 567

28 Uneven Prospects for Gains from Agricultural Research Related to Economic Policy *Theodore W. Schultz* 578

29 The Future of the International System: A View from the Inside *J. G. Crawford* 590

Name Index 601

Subject Index 606

Organization and Management of Agricultural Research Systems

by A. H. Moseman, T. L.E V. Ulbicht,
Jose Pastore, E. R. A. Alves,
S. M. Sehgal, Per Pinstrup-Andersen,
David Franklin, and C. R. Shumway

From Resource Allocation and Productivity
in National and International
Agricultural Research, edited by

T. M. Arndt, D. G. Dalrymple,
and V. W. Ruttan

16

Coordinated National Research Projects for Improving Food Crop Production

Albert H. Moseman

The coordinated, multidisciplinary, problem-oriented research project to improve food crop production is a most effective instrument for accelerating the evolution of useful technology. It provides the basic patterns and components necessary for developing more comprehensive national research capabilities to serve the agricultural development objectives of a country.

Agricultural scientists have had many decades of experience with coordinated national research projects in the advanced nations. And, particularly since the green revolution of the mid-1960s, the scientific community has accumulated a number of years' experience with such projects in a number of developing nations. Recent endeavors in research on food crop production demonstrate that the objective of establishing a sustained national research capability in developing countries is difficult to achieve, that insufficient attention has been directed to it, and that special long-term efforts are needed.

Coordinated National Research Projects in Agriculturally Advanced Nations

Agricultural Research in the United States

In the middle 1800s it was recognized that the United States should not depend upon European agricultural research for its development efforts but should build a national capability. The land grants to the respective states and

the legislation establishing the USDA in 1862 are critical points in the evolution of our national research system.

For the balance of the nineteenth century and through the early 1900s agricultural research in the United States was rather unstructured. It consisted of independent and isolated studies by research workers in the USDA, the state colleges or experiment stations, and other institutions. The history of research on heterosis, or hybrid vigor, in corn into the early 1920s illustrates this fragmented and individualized approach to agricultural science.

The coordinated national corn improvement research program established in 1925 under the Purnell Act was the first attempt to concentrate resources of the states and the federal government in a fully cooperative effort.[1] This was followed by similar coordinated projects for wheat, oats, barley, etc., during the 1930s.[2]

A number of coordinated national crop improvement research projects in the United States were regionalized, with the wheat research regions developed around the classes of wheat grown in the different parts of the country and with rice research directed specifically to the pattern of rice production suited to California rather than the Gulf states of Texas, Louisiana, and Arkansas.[3] The national corn research program was strengthened, with a new regional component, through the establishment of the special state-federal coordinated project for the South and the Southeast. This regional effort was initiated in 1945, twenty years after the initial coordinated program for corn improvement research was established for the central "Corn Belt" states in 1925.

The coordinated national research projects not only recognized the importance of regional needs but also provided for more precise location-specific research, conducted by the state agricultural experiment stations through studies that were in addition to – yet closely associated with – the total national or regional research efforts.

The present organizational structure of the coordinated national crop improvement research projects is less distinct than it was twenty-five years ago as a result of the increased involvement of the private sector and the increased autonomy of the research of the individual state agricultural experiment stations. The reorganization of the USDA's Research Service in 1972, with its regional administrative pattern, also has tended to obscure and perhaps complicate the relationships between the federal Agricultural Research Service and the state experiment stations as well as between the federal administrative regions themselves. However, the coordinated national research projects – with their regional, state, and localized research focus – functioned effectively during the time when the United States was building its total national capacity for agricultural research and supplied the base for the more autono-

mous, independent research efforts of the present. Of special significance is their impact in creating an awareness of the need to give continuing, concurrent attention to the many varied hazards or potential restraints faced by farmers. In signaling this need, the projects furnished the base for multidisciplinary team research.

Agricultural Research in Japan

The experience in Japan is similar to that of the United States.[4] The emphasis, early in the Meiji restoration period of the 1860s, was on the introduction of advanced technology from Europe. This was followed by a concerted effort to develop indigenous capabilities during the 1880s. The research in Japan continued into the 1920s on a fragmented basis and depended on farmer innovations for improved varieties.

Japan established national coordinated crop-breeding programs under the Assigned Experiment System for wheat in 1926, for rice in 1927, and for other crops and livestock in subsequent years. This was almost the identical time schedule followed in the United States, and in both Japan and the United States the coordinated national projects provided for research on regional, state, or prefectural problems within the coordinated national structure.

Some Attributes of Coordinated National Research Projects

The coordinated national research projects make the most effective and efficient use of research resources. They facilitate the prompt and continuous interchange of new knowledge and materials among research workers of the central government, the states or prefectures, and the private sector. The projects provide for research on problems of broad national or regional concern as well as on those that are location-specific. The national projects also facilitate the introduction and testing of knowledge and materials from abroad.

The foregoing benefits were common to the research organization pattern that evolved in both the United States and Japan. The development of the coordinated national project structure in the two countries was similar in timing and form but reflected independent judgments, since international contacts and communications on research organization in agriculture were limited before the 1930s.

Coordinated National Research Projects in Developing Nations

Research Resources in Developing Nations

Research in the developing nations before World War II or in the colonial period was strongly commodity-oriented and was carried out primarily in cen-

tralized research institutes such as those for rubber in Malaya and sugar in India and Indonesia.[5]

After independence, research in these countries was seriously disrupted, as expatriate scientists departed and new national government leaders gave priority to nonagricultural development. Agricultural research received no significant support for a decade or more in many new nations, up until the late 1960s.

Research in Technical and Economic Assistance Projects

The primary emphasis in technical assistance for agricultural development, as supported by the private foundations, bilateral national programs, and international agencies following World War II, was on the introduction and testing of materials and practices from agriculturally advanced nations. This process was followed for about fifteen years – until the era of the green revolution – even though the earlier experience with agricultural development in the United States and Japan had fully demonstrated that the direct introduction of materials and farming methods from abroad had limited potential.

Even the few cooperative technical assistance efforts that were research-based – such as the Rockefeller Foundation programs in Mexico, Colombia, and Chile – emphasized developing improved technology as rapidly as possible; limited attention was given to indigenous organizational structure or the links between national, state, and university institutions. Headquarters research centers were developed in Mexico at Chapingo, in Colombia at Tibaitata, and in Chile near Santiago, with regional stations in each country. These organizations had a highly centralized leadership structure, the regional or outlying stations serving primarily for testing or evaluation. The lack of trained personnel and a national institutional structure for research and agricultural education at the college or university level in Latin America precluded the development of effective federal-state coordinated research projects during the period between 1940 and 1950.

The cooperative Rockefeller Foundation program in agriculture in India, from its beginning in 1957, focused on developing coordinated national and regional research on maize, sorghum, and millets. Participants included the Indian Council of Agricultural Research, the Indian Agricultural Research Institute, the state governments, and the agricultural universities. The situation in India was different from that in Latin American countries, since India had (1) well-established research institutes, (2) the Indian Council of Agricultural Research which, at the time of independence in 1947, had been functioning for about twenty years, and (3) an emerging agricultural university structure, supported by USAID, that was developing concurrently with the cooperative Rockefeller Foundation-supported projects for crop improvement research.

The coordinated corn improvement research project established in the United States in 1925 and the assigned experiment systems established in Japan for wheat in 1926 and rice in 1927 furnished patterns in these countries for developing research on a coordinated national basis for other crops, livestock, and noncommodity problems. Similarly, the coordinated maize improvement scheme initiated in India in 1957 furnished a pattern for national coordinated schemes for sorghums and millets, wheat, rice, and other crops as well as for noncommodity research projects that have been developed in India in recent years. Many of these are still in the process of being established and are undergoing the usual stresses involved in developing cooperating relationships between participating scientists and participating institutions, but they are well conceived and soundly formulated.

The accelerated wheat production scheme in Pakistan functioned effectively during the period from 1965 through 1969 when it had substantial external funding and external coordinating leadership furnished by the Ford Foundation. However, the coordinated effort deteriorated after 1969 as the result of several factors including (1) diminished interest and support from the central and state governments, (2) the division of the west wing of Pakistan into the four provinces of the Punjab, Sind, Baluchistan, and the Northwest Frontier Province in 1970, and (3) the continuing political stresses and diversions resulting from relationships with India and the formation of Bangladesh in 1971. The strengthening and reorganization of the Pakistan Council of Agricultural Research, now under way with support from USAID, should help in the restructuring of the wheat project. Moreover it should serve as a pilot effort, or pattern, for other coordinated national research schemes in Pakistan.

The wheat research and training project initiated in Turkey in 1969 with cooperative support from the Rockefeller Foundation has made good progress in the development of staff, in the improvement of research facilities, and in providing an interdisciplinary approach to crop improvement and to agronomic and epidemiological research on a national basis. It also has developed effective cooperation with other countries in the region, especially in crop breeding and disease research. It was recognized when this project was initiated that it should be continued for a period of ten years. It appears that this is the minimum time required for the formation of a self-sustaining national coordinated project. A principal uncertainty at this time is whether a suitable institutional base for the project can be provided within the government to furnish the personnel policies, administrative procedures, and stable financial support necessary to ensure continued viability.

Rice breeding and improvement in Thailand has progressed effectively since the Rice Department was established as a separate organizational unit in the Ministry of Agriculture in the early 1950s. Although the Rice Department

and the Department of Agriculture were merged in 1972, the base of experiment stations throughout the country, the complement of well-trained personnel, and the working experience that has been gained over the past twenty years should make possible a sustained, productive national rice research project. This project also furnishes a pattern for the strengthening of other agricultural research in Thailand.

The national rice research program in Indonesia, established in 1970, has progressed rather slowly in establishing a coordinated national capability. This program was reviewed in 1974. A new unit that is to be set up to coordinate all research within the Ministry of Agriculture should be helpful in accelerating the development of a coordinated national rice research project in Indonesia.

The Bangladesh Rice Research Institute, established as an autonomous body by act of Parliament in May 1973 (but in the process of formation since 1968), has been adversely affected by the political conflicts attendant upon and following the country's independence, gained in 1971. However, substantial progress has been made in developing the facilities at Joydevpur, in training staff, and in getting a multidisciplinary research program under way. The BRRI is perhaps the strongest of the national research projects in Bangladesh and should be given priority attention so that it may serve as a pattern for other research which will be strengthened under the newly authorized (1973) Bangladesh Council for Agricultural Research.

It is interesting to note that the Department of Agriculture and Natural Resources of the Philippines, which is responsible for national crop improvement and production research, had no research scientist trained to the Ph.D. level on its staff working on either rice research or corn improvement research at the time of the Presidential Decree of November 1972 which set up the Philippine Council for Agricultural Research. This was more than ten years after the International Rice Research Institute was established at Los Baños with a complement of international scientists, and more than fifteen years after Dr. H. K. Hayes and others had been in the Philippines to help strengthen the country's corn improvement research capability. It is expected that coordinated research projects for rice and corn will be set up on a more effective national basis under the Philippine Council of Agricultural Research. The long delay in developing this type of national institutional capability, in a country that has received substantial technical assistance for agricultural development for more than twenty years, points up the need for direct and specific attention to this objective.

Indonesia is another country where external assistance has been furnished to develop corn production over a period of many years but where inade-

quate attention has been given to the building of an indigenous organization for a sustained national corn improvement research program.

The foregoing examples have been selected to illustrate the importance of devoting specific attention to the building of an organizational or institutional capability in the developing nation – as an integral part of a cooperative technical assistance effort in research to increase crop production. The potentials and restraints in each country will differ, but these are being assessed in many countries and the experience of the developing national food crop research projects in India, Pakistan, Bangladesh, Thailand, Indonesia, and the Philippines, as well as in other developing nations of the world, should be useful in contending with restraints in the building of such capabilities.

International Dimensions of Coordinated National Research Projects

Coordinated national crop improvement projects of the United States have furnished materials, consultation, and other assistance in strengthening coordinated national research projects in other countries. Germ plasm and consulting services were provided by the national rice improvement project of the United States to the cooperative program of the Rockefeller Foundation and the government of Colombia when they initiated the rice improvement research program in that country in 1957. The varietal collection from the United States also composed the base for the rice germ plasm reservoir that has been further developed by IRRI.

The introduction of hybrid corn into Europe following World War II was accomplished through the cooperative support of the United States national coordinated corn improvement program. This involved the furnishing of inbred lines, assistance in setting up procedures for evaluating the various hybrid combinations, and help in developing effective seed production organizations in various European countries.

During its early years, the wheat improvement research initiated in Mexico with the assistance of the Rockefeller Foundation in 1943 utilized the disease-resistant spring wheat varieties developed in the United States hard red spring wheat research project – a regional component of the coordinated national wheat research program. Subsequently, the *Norin* selections which were introduced into the United States from Japan after World War II and which were used to develop outstanding, high-yielding varieties for the Pacific Northwest region were made available to the national wheat research program in Mexico. The short-strawed, high-yielding *Norin* germ plasm performed equally well in the hybrids and the selections produced in Mexico.[6]

The cooperation which extended from the national wheat improvement

project in Mexico into the countries of the Near and Middle East, through support from the Rockefeller Foundation and the FAO, carried this germ plasm into these countries in the early 1960s. The inclusion of wheat research as a component of the Rockefeller Foundation cooperative agricultural sciences program in India in 1963 furnished the base for the wheat component of the green revolution in Asia. Since they evolved in the coordinated national wheat improvement research projects in Japan, the United States, and Mexico, it might be more appropriate to refer to the high-yielding varieties of the green revolution period as the "Japanese-United States-Mexican Wheats."

Strengthening Coordinated National Research Projects in Developing Nations

Coordinated national research projects do not emerge automatically from technical assistance support that is geared primarily to the objective of creating new, improved varieties. Experience with intensive or accelerated crop production projects as well as with more recent specific efforts to develop coordinated national research projects has helped to identify some of the restraints to the formation of a self-sustaining capability when external assistance has been terminated.

The National Commitment

National government leaders, including research officers, generally do not understand the kind of organization required to carry on an integrated research effort on a national basis. In countries where agricultural research has been limited or has been carried out as a series of isolated projects assigned to single-discipline specialists, it is usually necessary to operate a coordinated national project for several years in order to demonstrate the professional and administrative relationships involved. In most cases the requisite manpower in the constituent disciplines is not available. Where both manpower and facilities must be developed, a period of eight to ten years is usually required for the establishment of an effectively operating national research project which can produce the kind of results that will attract the commitment and support of government leaders.

The Organizational Base

It is not reasonable to expect a coordinated national research project to develop fully or to remain viable if (1) it is given essentially full autonomy and has no linkage to the central government or (2) it is connected with a college of agriculture, university, or other agency which does not have recognized national responsibility for the subject research. In most countries it is the Ministry of Agriculture which has both the responsibility and the funding

authority for research of national scope. There are numerous examples of technical assistance efforts for crop improvement where the institutional linkage has been ill advised; "national research centers" for selected commodities have been set up at isolated field stations or in affiliation with colleges of agriculture under circumstances that hinder the prospects for fulfilling "national" objectives.

Institutional Collaboration

A coordinated national research project requires not only a well-equipped and well-staffed headquarters station but also research facilities in the principal regions of the country where the crop is important. In the United States the presence of state agricultural experiment stations and their substations facilitated the development of well-integrated projects that could give attention to specific localized problems as well as to those of regional and national concern. In the United States a substantial number of federal field experiment stations also have been established to ensure that concerted attention is devoted to the more critical aspects of a given crop improvement effort. The national federal-state research station networks for coordinated national research have been evolving for more than a century.

In developing nations it is essential not only to establish the national research project on the right organizational base but also to utilize the complementary resources in the states or prefectures, the colleges of agriculture, and private research organizations. Where such complementary resources are inadequate they can be strengthened or developed through financial and staff support from the coordinated national program. This was done in the coordinated research schemes for maize, wheat, and rice in India, where the work in the major producing regions was tied into the emerging agricultural university experiment stations. Similarly, the coordinated national research projects that are being established under the Philippine Council of Agricultural Research are planned to include increasing participation by the colleges of agriculture and private research institutes. It is desirable to develop a formal agreement for the cooperative effort which spells out the contributions of the participating organizations, not only to minimize uncertainties but also to furnish a degree of continuity and stability to the project.

Interdisciplinary Collaboration

In many developing countries the crop improvement research has been the primary responsibility of an economic botanist, with little collaboration or participation from scientists in the allied disciplines concerned with diseases, insects, plant nutrition, weed control, or cultural practices. And the role of agricultural economists is still not well appreciated in coordinated interdisciplinary projects, even in the more agriculturally advanced nations.

An interdisciplinary research team will be established only if its leaders (1) identify the nature and relative importance of the particular problems a given country faces in respect to crop improvement and (2) include scientists with appropriate specializations on the team. And the mix of scientists will not remain in proper balance unless continued attention is given to the make-up of the research team.

The multidisciplinary functioning of an integrated research project can be achieved relatively easily in a single institute where all participants are located on one campus and can be brought together frequently. It is more difficult, but equally important, to provide for the interdisciplinary mix of scientists in a research project whose units are geographically dispersed across a nation. At the same time, such staffing may be particularly effective in addressing specific problems. Pathologists can be located in regions where diseases are most prevalent, entomologists can be assigned to stations in areas afflicted with major insect problems, and senior personnel in the various disciplines can be posted at different locations to furnish coordinating leadership to the integrated research.

Coordinating Leadership

A coordinated national project requires a full-time director. Although the project director should not be assigned other unrelated duties, it is desirable that he be a working scientist carrying out significant research in a consituent disciplinary or problem area.

The project director should not be selected on the basis of seniority, but should have the experience, professional capability, and personal attributes that allow him to be accepted by his colleagues. The project director must understand the importance of the component disciplines, ensure that attention is given to all relevant problem areas, and furnish continuing leadership to the national project through the planning, implementation, summarization, and evaluation stages. It is essential that he be able to visit the field and laboratory experiments as frequently as necessary to be informed of the progress of the research underway. He must work effectively not only with his research colleagues but also with the scientific and administrative leadership within the government, with the staffs of nongovernmental institutions that may be collaborating, and with external assistance agencies.

The identification and selection of capable leadership is particularly critical in establishing coordinated national research projects, since the experience with such projects is usually lacking among the scientific personnel in most developing nations. Advanced academic training to a Ph.D. degree does not necessarily impart the traits and competence required.

Personnel and Manpower Development

It is relatively simple to determine the professional and technical manpower needs for a coordinated national research project. The manpower development or training activities should be pursued in a systematic manner in order to provide the numbers of persons in the different disciplines, at the various levels of training required, who will furnish the competence necessary at headquarters and at the principal field locations. Although there is bound to be some loss of staff to other institutions or to other projects, definite targets should be set for the numbers of scientists to be trained to the undergraduate degree, the M.S., and the Ph.D. levels in each of the disciplines and for the technical or supporting staff required to carry on a coordinated national research project at the optimum level. The staff development program should be projected over a ten-year period so that an effective staff complement can be developed.

Facilities

Field stations and laboratories for research in most developing nations usually are not suited for reliable experimentation. The tendency in the past decade for technical assistance or funding agencies to establish independent research projects or to require a research and training component in separate major development schemes has resulted in the setting up, in many developing countries, of research units that are geographically scattered and institutionally isolated. It is still common practice for most technical assistance or lending projects to be developed around one or a few commodities or problem areas, with the research facilities planned only for such specific activity.

More attention should be given to the planning of coordinated national research projects on the various commodities within a national research system or organizational framework so that there may be combined support for mutually necessary facilities at a national headquarters, at selected regional locations, and in the various localities or microecological areas. This would help to avoid the popular tendency to overbuild and duplicate stations, laboratories, and costly items of equipment.

Administrative Management

Developing nations tend to retain the administrative procedures followed during their colonial years. As a result, the recruitment and management of personnel, procurement practices, and other administrative activities frequently are not well suited for national development projects, including research. Governments are reluctant to give any special consideration to salaries, to the promotion of scientific personnel on the basis of performance rather

than seniority, or to flexibility in the procurement of equipment and supplies.

It is difficult to establish – and maintain – the concept that in a research organization the administrative functions must be carried out in such a manner that research is facilitated rather than controlled. Any deviations from usual government procedures are difficult to furnish for a single selected project, even one of a coordinated multiinstitutional type which is national in scope. For this reason increasing attention has been given to the establishment of national research organizations on a semiautonomous or autonomous basis, with their own boards of directors and scientific councils offering guidance in administrative matters and on technical programs.

It would be difficult to establish a viable department of chemistry for college-level education outside of the framework of a university. Similarly, it is difficult to establish a single national crop improvement project outside of the institutional framework of a broader research organization. Clearly it is advantageous for the coordinated national research projects on individual commodities to be combined under a unified national agricultural research organization which would supply the type of administrative management that would ensure a reasonable degree of institutional stability.

Funding

Biological research is long term in nature, most projects requiring three to five years before they can produce useful and reliable information and materials. The financial support for research in most developing nations is furnished almost entirely by government, primarily from the central government resources.

It has been difficult to arrange for long-term funding for agricultural research in the agriculturally advanced nations. It is equally difficult in developing countries, although some progress has been made in establishing autonomous or semiautonomous national research organizations with funding handled outside of the regular governmental channels. The Philippine Council of Agricultural Research is closely aligned with the National Science and Development Board, which offers some flexibility in financial management. The Malaysian Agricultural Research and Development Institute has a separate "MARDI Fund," established under the authorizing legislation, which is designed to furnish a high degree of flexibility in the management of funds under the jurisdiction of the governing board. The MARDI Fund has not yet been permitted to function as intended, but it does offer a potentially workable pattern for such national research organizations.

The provision of research funds through special cesses or taxes on the individual commodity is attractive to some, particularly in the case of such cash

crops as rubber or oil palm, for which the collection of an export tax is relatively simple. This would be more difficult in the case of food grains or as a source of funding for noncommodity research problems, which are too often neglected. A preferred procedure for funding would be to develop a commitment and responsibility on the part of the national government, with a concomitant recognition that the investment in agricultural research is an essential component in any national development process.

External Support and Collaboration

Although many technical and economic assistance organizations have become increasingly interested in strengthening research in developing countries, the nature and magnitude of such support are still uncertain.

More careful attention should be given, particularly by lending institutions, to the size of investment in a national research project or organization that can be justified within the economic base of the host country. Time is as critical as money in developing a self-sustaining national agricultural research capability, when one considers the number of years required for training scientific personnel, for building and equipping experiment stations and laboratories, and for developing institutional and multidisciplinary cooperation into a compatible operation. The size of the investment in buildings, equipment, expatriate technical or scientific personnel, staff development, and other components should be held to a reasonable minimum to avoid premature disappointment of government officials with the costs and returns aspects of research.

There is usually a need for external, experienced scientific leadership in planning and developing a coordinated national research project. Many developing countries will reject this notion arguing that such leadership can be supplied by already available senior and experienced persons or by individuals recently trained to the Ph.D. level in overseas universities. Although some of these people may have the capability to furnish effective planning and coordinating leadership, it is commonly found that senior personnel in developing countries are inflexible in adjusting to a teamwork approach while recently returned Ph.D.'s tend to lack research organization and management experience. Scientists who have worked primarily in a strongly discipline-oriented organization face a substantial adjustment if they assume responsibility for a national multidisciplinary research project. In some recent cases where university professors were recruited to furnish coordinating leadership for such a research project they had difficulty in conceptualizing an effort that involved the full working partnership of scientists from several disciplines and tended to revert to an emphasis on research along the single-discipline lines with which they were familiar in the academic setting.

External financial support and some level of technical guidance should be continued for a period of at least eight to ten years in order to ensure the formation of a stable, self-sustaining project. The external input should be substantial for the initial five or six years, after which time there can be a gradual phasing down and out.

There should be continuous dialogue with the appropriate officials in government to ensure not only that the full government commitments of funds and other resources are met but also that necessary action is taken to develop the institutional and organizational structure required for a self-sustaining project when external support is withdrawn.

In addition to the international agricultural research institutes, other international technical assistance organizations – including the IBRD, UNDP, USAID, and other national or bilateral organizations – are giving more attention to the development of national agricultural research organizations and systems as well as to specific coordinated national research projects for selected commodities. It can be expected that, as cooperating technical assistance is increasingly concentrated on this objective, national research capabilities, both on a selected project or commodity basis and on a "national system" basis, will be strengthened in many of the developing countries over the next decade.

NOTES

1. The organization and functioning of the cooperative corn improvement research program is discussed in Herbert K. Hayes, *A Professor's Story of Hybrid Corn* (Minneapolis: Burgess, 1963).

2. The experiences in wheat research that lead to the workers' conferences in 1929 and 1930 which planned the cooperative hard red winter wheat improvement program are reviewed by L. P. Reitz and S. C. Salmon, *Hard Red Winter Wheat Improvement in the Plains*, USDA Technical Bulletin no. 1192 (Washington, D.C.: USDA, 1969).

3. The development of coordinated commodity research systems in the United States is discussed in greater detail in Albert H. Moseman, *Building Agricultural Research Systems in the Developing Nations* (New York: Agricultural Development Council, Inc., 1970).

4. See chapter 2 in this volume. Also Yujiro Hayami in association with Masakatsu Akino, Masahiko Shintani, and Saburo Yamada, *A Century of Agricultural Growth in Modern Japan: Its Relevance to Asian Development* (Minneapolis and Tokyo: University of Minnesota Press and Tokyo University Press, 1975).

5. For information on national agricultural research systems see Albert H. Moseman, ed., *National Agricultural Research Systems in Asia* (New York: Agricultural Development Council, Inc., 1971); John J. McKelvey, Jr., ed., *African Agricultural Research Capabilities* (Washington, D.C.: National Academy of Sciences, 1974).

6. The source and progressive use of the semidwarf wheats are discussed in L. P. Reitz and S. C. Salmon, "Origin, History, and Use of Norin Wheat," *Crop Science*, 8 (November-December 1968), 686-689.

17

Contract Agricultural Research and Its Effect on Management

Tilo L. V. Ulbricht

The Rothschild Report published by the U.K. government in 1971 recommended the application of the customer-contractor principle to some of the work carried out by the research councils.[1] It was a personal report by Lord Rothschild, head of the Central Policy Review Staff in the Cabinet Office, which advises the Cabinet on long-term policy (popularly known as the "Think-Tank"). The effect of the proposals on the Agricultural Research Council (ARC) was that, in the future, most of its funds would come in the form of contracts or commissions for specific applied research from the Ministry of Agriculture, Fisheries and Food (MAFF). To appreciate this report and the stormy debate which followed, some background is necessary.

In common with other research councils, and with many research organizations in developed countries, the Agricultural Research Council expanded greatly after World War II. The number of graduate scientists employed increased from 440 in 1948 to 1,280 in 1970. At the time of the Rothschild Report, the ARC was financed by the Department of Education and Science, which was advised on its budget by the Council for Scientific Policy. This council, in dealing with the research councils, was mainly concerned with strategic and fundamental research, although the ARC in particular had always engaged in applied research also.[2] MAFF, although represented on the ARC's council (its top executive body) and on many of its committees, want-

ed a more direct say in its affairs, and it was this, among other factors, which led to the Rothschild Report.

At the same time, it would be a mistake to look upon this report and the debate which followed as an isolated phenomenon. It could not have occurred ten, possibly even five years earlier. But since then the rapid increase in the funds devoted to research has been drawing to a close in most developed countries; governments have increasingly had doubts about the benefits that their countries were deriving from all this research; and the public has been increasingly concerned not only about pollution but also about the whole trend of our technological societies. Where are we going? What kind of world do we want? It is because of the absence of generally agreed aims for our societies that there is doubt and conflict about the role of research.[3]

With this perspective, the Rothschild debate, largely conducted in the correspondence columns of the London *Times*, becomes more comprehensible. In this debate three things were confused:

1. the principle that scientists financed by the government should be accountable for what they do and have a responsibility to meet the needs of their country;

2. the application of the customer-contractor principle as a particular means of achieving that accountability; and

3. the wider issue of science policy: how can scientists through their research help to meet their country's needs when the government has no clearly defined long-term policies?

The majority of scientists accepted (1), rejected (2), and were unclear about (3).

Elderly scientists, yearning for the good old days of unfettered expansion and believing in Polanyi's Republic of Science, protested that the research council system had stood the country in good stead and was the envy of the civilized world, including the United States, and that it should not be abandoned in favor of some ghastly government bureaucracy.[4] Outsiders, not knowing the political background, thought the scientists were making a lot of fuss about nothing and that it was time they realized that they had to justify their existence like everyone else. The parliamentary Select Committee on Science and Technology thought that the real trouble was the lack of a coherent science policy and of any mechanism by which one could be formulated.[5] Squeezed out in all this was any serious consideration of the administrative consequences of applying the customer-contractor principle or of possible alternative changes which could improve the management of research in the research councils and, in particular, the procedures by which they decided their resource allocations. The government White Paper essentially accepted Rothschild's recommendations.[6]

It would be misleading to suppose that the changes in the management of agricultural research in the United Kingdom in the last few years can simply be ascribed to the application of the customer-contractor principle. Other contributing factors were the changeover from a period of rapid expansion to one of static or (currently) declining budgets, the change in the public attitude toward science and technology, and the realization that the organizational system for dealing with agricultural research had not kept pace with the increase in personnel and resources during the growth phase.

To deal with that last point, let us make an admittedly exaggerated distinction between adminstration and management. In administration one is concerned essentially with maintaining what exists already. It is often said that the main aim is not to make a mistake, and this implies not taking risks, reluctance to make decisions (any decision involves some element of risk), and delegating work but not responsibility. In such a system the post is more important than the person who occupies it, and it is invariably associated with incremental budgeting – everyone gets a bit more than the year before, and one does not question the rationale of one's present or future resource allocation.

In management one strives to have a clear aim and allied operational objectives: the aim may be to make a profit or to increase it by launching a new product, it may be to control a new crop disease or to save imports by developing a new animal feedstuff, etc. Risks have to be taken, and it is essential that decisions be made; responsibility has to be delegated, and people are more important than the posts they occupy. Such a system is associated with some kind of planned budgeting.

However, the virtues of good administration should not be overlooked. It is a system which makes for stability and it can be remarkably successful when the particular organization's environment is not subject to rapid change. Unfortunately, stability tends to lead to rigidity, and often such a system cannot cope when dramatic changes begin to occur. The history of some of the long-lived cultures and empires, such as Ancient Egypt, Assyria, Rome, Byzantium, and the Ottoman Empire, are examples of this.

It would be true to say, I think, that until relatively recently government-financed and government-controlled research institutions have been administered rather than managed. Although undoubtedly good management ideas and systems have been developed in industry, no one is very clear as yet how best to apply them in the very different environment of government organizations.

It was in response to these circumstances that the Agricultural Research Council decided to set up a planning section in 1971 to advise itself and its chief executive on strategy. What we found was a well-administered and con-

scientiously run system, but one in which there was little central planning and in which budgeting was incremental. The system could certainly give precise information regarding the budget of a particular institute, but it would be in classical terms of staff costs, equipment, chemicals, animals, library, building overheads, and capital expenditure. It happens that work in many major fields of research is carried out at several of our institutes (we have twenty-nine in all and twelve units attached to universities). For example, eight institutes do some work or other on potatoes, and twelve are concerned with various aspects of grassland research. It was not possible to say what proportion of our total expenditure was devoted to various commodities (pigs, strawberries, wheat, etc.) or to major research areas like nutrition, breeding, disease, or to topics like harvesting, storage, processing, food quality, etc.

We therefore instituted a project system in the Agricultural Research Council. All the research in progress is described in terms of project units (about 3,000 in all, two to three per graduate scientist on average). We devised a system for classifying agricultural research; each project unit is coded in about a dozen fields.[7] Some simply give administrative information (name of institute, department, number of project, etc.), another group defines the agricultural problem to which the work relates, and a further group defines the action being taken to investigate the problem. In contrast to certain unstructured key-word systems, this is a matrix system devised for management purposes, each field having a hierarchy of structured key words.

Concurrently, a project-costing system was introduced. The same project units which are classified, and the information which is stored on computer, are also costed. This made it possible for the first time to look at the existing pattern of our resource allocation – by commodity, research field, or whatever – and to ask ourselves whether this seemed to be a good allocation, taking into account national needs, the current output values of various sectors of the industry and their economic prospects, and so on. Subsequently, MAFF, the Department of Agriculture and Fisheries for Scotland (DAFS), and the Ministry of Agriculture in Northern Ireland all decided to adopt the same project system. Consequently, almost all the agricultural research in the United Kingdom (except that at universities) is now classified in the same manner, and the information is available from one computer.

Retrieval of information from the project system is flexible and can be on either a broad or a narrow basis: questions like, "How much are we spending on cereals research?" as well as "How much are we spending on the mechanical harvesting of cereals?" and "What projects have we on breeding wheat resistant to foliar fungal diseases?" are all answerable.

At the same time that work on the project system was beginning, we suggested that the existing system for reviewing research (which I will not de-

scribe) should be revised so that each major commodity or commodity group (e.g., cattle, cereals) and important noncommodity research areas (such as soils research) should be the concern of a committee which would review the research systematically and recommend priorities. A working party was set up by the ARC to devise a scheme and was already at work when the Rothschild Report burst upon the scene. Following this report it was decided that the determination of research priorities should be carried out jointly with the MAFF and the DAFS. The system which was proposed by a new, joint working party of ARC, MAFF, and DAFS and which was accepted is called the Joint Consultative Organization. It is composed of five boards, namely: Animals; Arable Crops and Forage; Horticulture; Engineering; Food.

Each board has twenty or more members, including scientists, members of the industry, officials (MAFF and DAFS), and an economist. These boards examine current research in relation to what research is required and the needs of various interested parties and make recommendations regarding priorities. They take into account not only the research conducted by the ARC but also the research and development conducted by MAFF and DAFS at their own institutes, experimental farms, etc.

Each board has set up a number of committees, as for example:

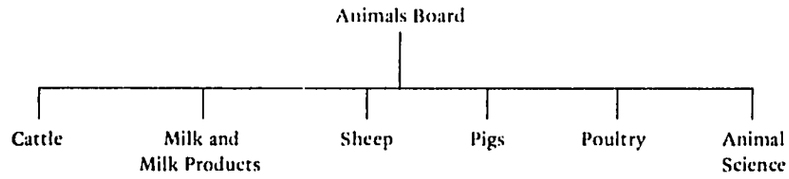

The spectrum of membership of committees is similar to that of the boards, but scientists are more strongly represented, constituting approximately half the membership.

This new system was set up only in 1973, so it is a little early to comment on its functioning. The intention is that each committee will review its own special area – coordinating with others as may be necessary – and report to its board. Each board then produces a composite report which goes to all three of the sponsoring organizations (ARC, MAFF, and DAFS) once a year. The Joint Consultative Organization has an advisory, not an executive function; the boards have not, for example, been allocated budgets which they can disburse. On the other hand, obviously the system can work only if serious note is taken of the advice offered.

The project system has been used to provide the committees with the basic information regarding ongoing research. A framework has been drawn up

		Effort (£000)	Description	Main Objectives
30 The biological characteristics of crop plants	300 Plants in general		Plant physiology and biochemistry	To provide an understanding of the biological, physical, and chemical mechanisms which control plant reproduction, growth, function, and behavior
	301 Grassland and forage crops		Plant physiology and biochemistry in relation to specific crops	To provide means of controlling the reproduction, growth, and function of specific crops
	302 Cereals			
	303 Arable crops			
	304 Vegetables			
	305 Fruit			
	306 Protected crops			
	307 Decorative crops			

Figure 17-1. A portion of a framework for crop production. (The subsequent items in the extreme left-hand column are: The soil as an agricultural input; Natural inputs other than soil; Fertilizers and crop nutrition; Genetics and breeding; Crop protection; Handling and storing crop products; Processing primary crop products.)

which is a simple two-dimensional matrix in which all project units appear (each appearing once only). Part of the framework for crop production is shown in Figure 17-1. Each numbered box in the grid is called a "project area," e.g., "Biological Characteristics – Vegetables." Certain project areas were allocated to each committee to define its area, and so on. In other words, the buildup of the information system is as shown on p. 387.

By this means, it was possible to provide a computer printout to each committee of the project unit with which it is concerned, structured by project area. Specific printouts structured in other ways, as may be required, can also be provided.

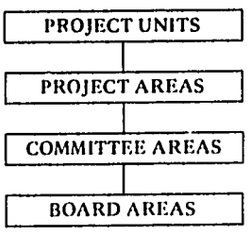

At this point, the following question must be touched on, at least briefly: What criteria are to form the basis of recommendations by boards and committees on research priorities? My Section has been studying available quantitative techniques, such as cost-benefit analysis, for some time. A review we have made of the published material on the cost-benefit analysis of agricultural research and development (R & D) projects has convinced us that, in its present state, cost-benefit analysis does not provide a valid basis for the quantitative planning of agricultural R & D programs.[8] The objections to it are given in a recent paper.[9] They fall under three headings. First, the technical data which are subjected to economic analysis are often so imprecise that corrections stemming from the niceties of economic theory are trivial in relation to the uncertainties in the data themselves. Second, there is a lack of uniformity in procedures, for example, in the way benefit is defined and estimated. This makes comparison of analyses hazardous. Third, the presentation of the results of cost-benefit analyses, particularly in the way initiated by Griliches,[10] we believe to be objectionable. In particular, relating benefit just to R & D expenditure leads to misleadingly high benefit-cost ratios.

The alternative, therefore, is to rely on the informed judgment of the members of the boards and committees. We suggested, however, that this process could be rationalized to some degree by considering priorities at three levels, as follows:

Level (1) Decisions on priorities between commodities and major research areas;

Level (2) Decisions on priorities within one commodity or research area;

Level (3) Priorities between individual project units.

For each level, a checklist of criteria was drawn up. For Level (1), for example, criteria were grouped into economic factors (such as national benefit, output value, value added by commodity sector, import-export considerations, etc.) and social factors (such as regional welfare, consumer welfare, environmental considerations, etc.). The possibility of weighting these different factors and so arriving at a scoring system was considered but rejected on the grounds that it gives a spurious air of precision to what should be recognized as being fundamentally a subjective process.

Clearly, Level (3) is the concern of institute management, Level (2) of the commodity committees, and Level (1) of the boards. The final decisions, including inter-board decisions, rest with the senior management of the three sponsoring organizations, ARC, MAFF, and DAFS.

One of the functions of the Joint Consultative Organization is to give advice on which MAFF can base its commissions to the ARC. In describing the customer-contractor principle, Rothschild had written: "The customer says what he wants; the contractor does it (if he can); and the customer pays." The application of this principle to the financing of research councils in the United Kingdom means that the customer (that is, the government department) must know what it wants. Rothschild recognized this problem and therefore recommended that the appropriate government departments should each have a chief scientist, with an appropriate scientific staff. MAFF now has a Chief Scientist's Organization.

As far as agricultural research is concerned, the customer is MAFF, and the principal contractor is the ARC (which now gets 55 percent of its budget in the form of commissions from MAFF, the remainder continuing to come from the Department of Education and Science). Initially, MAFF has commissioned 55 percent of the ARC's existing ongoing research, but in future its choice of work to be commissioned will be influenced by the advice of the Joint Consultative Organization, just as the ARC takes note of that advice in its own research planning.

The task of drawing up and agreeing on commissions covering something like 30 million dollars' worth of research is one of no mean administrative complexity (even if one puts to one side awkward problems like what to do about capital cost of buildings which will be used for both commissioned and noncommissioned research). How has this task been accomplished?

In the first place, MAFF and ARC were able, after numerous discussions, to agree that the number of commissions must be kept small — in fact, to twenty. These are mostly on a commodity basis (e.g., pigs, cereals, vegetables, etc.). Using our classification system, we were able to produce a printout which allocated each project unit to one or other of these twenty master program areas (which in some cases are identical with or very similar to committee areas, e.g., cereals, vegetables). However, these master program areas were structured not by project areas but in terms of objectives and subobjectives, to which project units were allocated by scientific experts (and the information then added to the classification data on the computer).

A part of a commission is described in Table 17-1. It will be noted that it is a *draft* commission that is illustrated. This is in fact the kind of working document that MAFF and ARC have used, but the formal commissions do not list project units and give costs only down to the subcommission (objec-

Table 17-1. Illustration of Draft Cereals Commission

Aim: To improve the quantity and quality of home-grown cereals				
Objective/Sub-objective		Project Unit No.	Cost (£000)	Project Unit Title
	A. Sub-Commission – Wheat			
A.1	To increase yield/acre and quality of grain			
A.1.A	To provide new high-yielding, disease-resistant, quality winter and spring varieties			
A.1.A.01	Breeding varieties with good agronomic characteristics, including short straw			
A.1.A.02	Establishing durable resistance especially to yellow rust, septomia and mildew			
	etc.	etc.	etc.	etc.
	B. Sub-Commission – Barley			
	etc.			

tive) level, it being recognized that the *management* of research is the function of the contractor, who must be free to change the details of the program in order to meet the stated objectives in the best possible way.

Figure 17-2 provides an extension of our project system diagram. The computer can print out the commissions; it can also produce printouts for each institute showing which project units are commissioned and which are not. Also mentioned in this diagram are project groups; these are departmental or interdepartmental groupings of project units which are often administered as a group (e.g., the "Enteric Diseases Project"). This information can also be computerized, but project groups are essentially for local management, not for central planning.

A further aspect of commissioning is that there must be some kind of review procedure. Since the first commissions have only just been drawn up, this procedure will not begin before 1976. It is envisaged that, in addition to regular annual reporting of the progress of commissions, there will be formal reviews at appropriate intervals (which could vary considerably, depending on the nature of the work) conducted jointly by MAFF and ARC, involving the consideration of a special progress report and discussions with senior scientific staff.

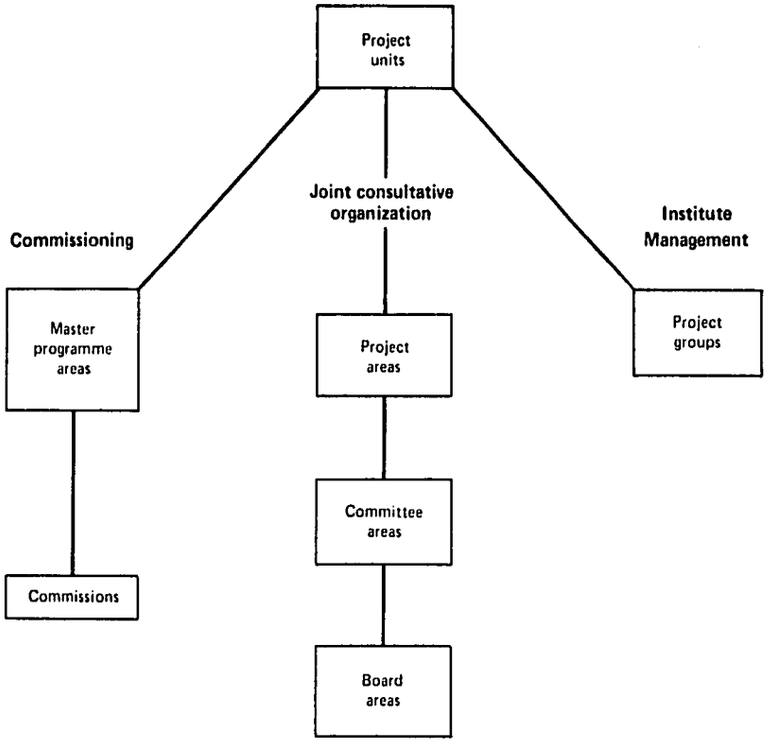

Figure 17-2. The ARC project system.

Conclusions

As indicated earlier, it is not possible to attribute changes in the management of agricultural research specifically to the introduction of the customer-contractor principle, since other important factors have been at work. Indeed, the decision to apply the principle to the research councils may be regarded as deriving from these other factors. In addition, the changes have been very recent and therefore any long-term consequences can only be guessed at.

The principal changes have been a shift away from research administration toward more positive management. The methods used to bring about these changes, as outlined in this chapter, have been: definition of research in terms of specific projects with defined objectives; introduction of project costing; introduction of a system for the systematic review of research programs and determination of priorities and for replacement of incremental by planned

budgeting. These changes also provide the basis for improved coordination of research programs in common fields between our own institutes and other organizations (such as the Agricultural Development and Advisory Service of MAFF).

The majority would regard these changes as necessary and desirable. At the same time one must frankly admit a significant drawback: a considerable increase in the administrative load, both at our headquarters and for directors and senior staff at our institutes. This is a question not only of paper work but also of attendance at many more meetings, committees, and boards, meetings to discuss commissions, preparation of papers and reports. This has been accomplished with very little increase in administrative staff. As regards the longer term, some scientists fear that the introduction of contract research will in due course result in an unhealthy over-emphasis on short-term, applied research, with consequent neglect of the strategic and fundamental research which the ARC, at least, recognizes must be the basis for future agricultural development.

Our experience of these changes has also focused our attention on certain other problems. First, there is no clearly defined long-term policy for agriculture in the United Kingdom, an essential input for the effective planning of agricultural research within a framework of financial restrictions.[11] Second, the usefulness of existing quantitative methods of research planning developed in industry, when applied in the context of government research, is limited. My Section is continuing to study this question. Third, it is also apparent that insufficient resources have been devoted in the United Kingdom to the *development* of agricultural research findings.

I think it is important at least to mention these problems, especially as I suspect that the first two may be widely shared.

In concluding this chapter, I would like to address myself to some questions posed by Dr. Richard Nelson in discussions at the Airlie House conference.

1. Is the problem in research management one of criteria (i.e., good selection) or of the generation of good ideas (i.e., entrepreneurship)? The answer is both. The provision of an environment which encourages entrepreneurship and the generation of good ideas must be a major concern of any research organization. Governmental laboratories are handicapped by having to follow rules and regulations on staff, pay, etc., which may be suitable for administrative departments but do not meet the needs of an organization devoted to research. (The international institutes are better off in this respect.)

2. How is selection to be made – by *ex-ante* quantitative evaluation or by process of judgment? As already indicated, we believe that there is no valid basis for the notion that objective quantitative methods yet exist for ranking

research priorities and drawing up an optimum portfolio of projects. The process has to be one of informed judgment using systematic aids, including economic analyses as one input to the decision process.

3. Do we favor planned complementarity in research or pluralism (duplication) and competition? No simple answer can be given to this question. It is a matter of finding the right balance. In most large research organizations there has been wasteful, unconscious duplication, owing to a lack of information and a lack of coordination. Good planning implies good coordination but allows, and may positively encourage, conscious duplication and pursuit of different routes to the same goal.

4. Should publicly funded research be tightly controlled, e.g., by contracts, or is it better to have looser control, with accountability vested in the research director? The fact that the latter system has been found wanting does not necessarily imply that the former constitutes the correct solution. It is reasonable to expect that applied research in agriculture (mostly short term) should be more tightly controlled than strategic and fundamental research (mostly longer term). In effect that is now the situation in the United Kingdom, since 55 percent of the ARC's budget is in the form of contracts for applied and what one might call applied-strategic work; 45 percent of the budget continues to come from the Department of Education and Science, and this is mainly for long-term strategic and fundamental work. To have all or an overwhelming proportion of research controlled by contracts would almost certainly stifle long-term basic work and, in particular, the more imaginative and unpredictable research. Whether contracts are the best mode of controlling applied work no one can yet say. It is a cumbersome system, and one wonders what would have been the return of a comparable investment in staff and time in trying to improve the coordination and planning of research in other ways. But perhaps the inertia in any large organization is such that only strong financial pressures can bring about significant change.

NOTES

1. *A Framework for Government Research and Development*, Command 4814 (London: Her Majesty's Stationery Office, 1971).

2. For definitions of these terms, see T. L. V. Ulbricht, F. H. Dodd, and W. S. Wise, "Six Types of Research," *Nature*, 240 (1972), 427.

3. G. Wansink and T. L. V. Ulbricht, "Mechanisms for Adapting Agricultural Research Programmes to New Goals," paper presented at Second Working Conference of Directors of Agricultural Research, Organization for Economic Cooperation and Development, Paris, November 1972; see also final report of this conference, *Summary Report of the Second Working Conference of Directors of Agricultural Research* (Paris: OECD, 1973).

4. M. Polanyi, "The Republic of Science, Its Political and Economic Theory," *Criteria for Scientific Development*, ed. E. Shils (Cambridge: M.I.T. Press, 1968).

5. *First Report from the Select Committee on Science and Technology, Session 1971-72, Research and Development* (London: Her Majesty's Stationery Office, 1972); *Fourth Report from the Select Committee on Science and Technology, Session 1971-72, Research and Development Policy* (London: Her Majesty's Stationery Office, 1972).

6. *Framework for Government Research and Development*, Command 5064 (London: Her Majesty's Stationery Office, 1972).

7. *Revised ARC Classification System*, Agricultural Research Council, Planning Section Report no. 9 (London: Agricultural Research Council, 1974).

8. *Cost-Benefit Analysis in Agricultural Research*, Agricultural Research Council, Planning Section Report no. 6 (London: Agricultural Research Council, 1973).

9. W. S. Wise, "The Role of Cost-Benefit Analysis in Planning Agricultural R & D Programmes," *Research Policy*, 4 (1975), 246.

10. Z. Griliches, "Research Costs and Social Returns: Hybrid Corn and Related Innovations," *Journal of Political Economy*, 66 (1958), 419-431.

11. See T. L. V. Ulbricht, "Agricultural Research and Science Policy," paper presented at an Experts' Meeting on the Relationship between Agricultural Research and Socioeconomic Policy, and Agricultural Research and Science Policy, Organization for Economic Cooperation and Development, Paris, January 1975.

18

Reforming the Brazilian Agricultural Research System

José Pastore and Eliseu R. A. Alves

Brazil is currently experimenting with a new model for organizing agricultural research: the public corporation. The object of this experiment is to increase the quantity and quality of scientific knowledge relevant to agricultural development. Its main objective is to make the whole research system more sensitive to the demand for technology.

The main organizational agency of the new system is EMBRAPA – the Brazilian Public Corporation for Agricultural Research. This agency operates like any public enterprise, being open to all types of financial and human resources and at the same time ready to "sell" its services to all kinds of clients. The corporation's principal product, of course, is agricultural technology and its primary client is the government. Both federal and state governments establish their priorities in terms of products for export and for domestic consumption. An increase in agricultural productivity is the basic need to be met by the research, extension, and credit complex, and research is the responsibility of EMBRAPA. The initial task of EMBRAPA, then, is to transform the general production goals of the government into research programs geared to increase the productivity of land and labor. Its second task is to organize and improve the skills of the scientific and technical staff who carry out the research programs.

EMBRAPA is not subject to civil service hiring restrictions. It is free to hire whomever is considered qualified for its programs at national and inter-

national labor market prices. In order to economize, EMBRAPA is directing its main research programs through national centers. This effort to concentrate financial and human resources on a few, but relevant, products is just beginning. Three national centers have been established to date: wheat, rice, and dairy.

This chapter first offers a brief overview of the trends in Brazilian agricultural development. Second, it illustrates the role of research in agricultural development in Brazil by providing historical background. Third, the basic principles behind EMBRAPA are described and, finally, the main accomplishments of the new research system to date are presented.

Trends in Brazilian Agricultural Development

Land has been abundant in Brazil. For many years it has been Brazilian policy to increase agricultural production through the expansion of cultivated areas. However, this is changing. Although pressures to expand the agricultural frontier continue, there has in recent years been an increasing demand to raise the productivity of land already under cultivation.

During the 1950s the expansion of cultivated area and the increase in farm employment continued to represent the dominant sources of growth of agricultural output in Brazil.[1] In the decade between 1960 and 1970, an increase in land productivity was observed throughout the country, with the exception of the Northeast. At the same time, the rate of labor absorption declined significantly.[2]

The change in trends of agricultural development in this decade was a consequence of several factors. Favorable conditions in the international market and growth of domestic demand stimulated pressures for large increases in agricultural production which exceeded the possibility of growth by expansion of the cultivated area. The availability of good and cheap land for agriculture diminished considerably. These new forces (international and domestic demand for food and fibers) produced a dialogue between official authorities on the one hand and the farmers, industrialists, and, especially, technicians on the other. The result was a revision of basic agricultural policy. Growth through expansion was maintained. However, increase in land and labor productivity was explicitly introduced as a new, additional goal during the late 1960s and early 1970s.

Initially, the emphasis was on disseminating existing technological knowledge from the research institutions to the farmers. The heavy emphasis on agricultural extension services during the sixties can be understood within this framework. This circumstance also explains the high priority allocated to the development of special lines of credit for the purchase of modern in-

puts as well as the emphasis on minimum price policies to stimulate production and productivity.

An internal crisis for food in the domestic market became an additional and powerful factor for revising agricultural policies, especially in the mid 1960s. The feeding of the large urban centers suddenly became a crucial economic and political goal. Government became aware that inflation plus food shortages were the ingredients for social upheaval and radical political changes.

The initial steps toward the modernization of the agricultural research system were taken at the federal level, within the Ministry of Agriculture, which was under increasing pressure to raise the productivity of the agricultural sector.

The economic forces that entered the picture in the sixties created, in the beginning of the seventies, a favorable atmosphere for profound change in the Brazilian research system. This system has undergone several changes, but none of them has succeeded in providing Brazil with a research system capable of handling agricultural problems. It is our contention that lack of incentives in the economic system has been responsible to a great extent for the failure of the reforms that have been tried.

Historical Background

There were some manifestations in Brazil of the great changes of the eighteenth and nineteenth centuries in the agrarian sciences in Europe. The first Brazilian agricultural research units were created within the atmosphere of European liberalism, which generated a *diffuse model.*

The Diffuse Model of Research

The main feature of this model is that each research unit tries to diversify its activities, researching many different products and attempting to generate a wide array of technologies.[3] It represents an adequate system for organizing research in an environment with special characteristics. Among these characteristics are the following:

1. Availability of abundant resources for research. The abundance of resources destined for research indicates that the society has already recognized the importance of research in the modernization of agriculture. Furthermore, mechanisms have been developed to provide agricultural research with sufficiently generous and flexible budgets to meet its needs.

2. Predominance of a liberal philosophy, which accepts the behavior of the scientists as individuals and provides an atmosphere of freedom in the choice of research projects.

3. Existence of a critical mass of farmers sufficiently organized to interact with researchers and administrators and to make the problems they face ex-

plicit. From this interaction, pressure develops to allocate adequate resources to research. This pressure also prevents the scientist from becoming alienated from the real world and concerned only with his particular problems.

The pressure from farmers, together with the individual orientations of scientists, results in a research system which seeks to generate diversified information covering a vast range of subjects and large numbers of crop and animal enterprises. There will be many lines of research, some seeking to economize on land, some on labor.

The tendency is to develop what is possible in such a broad range of areas, given the limitations of time and money. The individual interests of the scientists are satisfied because they have a wide range of choice with respect to areas of research. At the same time, this system guarantees that the desires of the majority of farmers, particularly those in a position to influence the research institutions, will be satisfied. When an individual farmer seeking information on how to improve the efficiency of his farm comes in contact with the universe of knowledge generated, it is likely that he will find the information he needs.

The diffuse model generates a large amount of information, only part of which crystallizes into new technology. This makes the model expensive and thus practical only in wealthy societies which can invest large quantities of resources in research. For example, the model has been in use in Europe and the United States for some time and more recently in Japan.

In the developing countries two of the ingredients essential to the functioning of the diffuse model are in short supply. First, resources for research are scarce. Second, the low cultural level of farmers, together with difficulties of transportation and communication, make the establishment of a dialectic difficult. Nevertheless, many researchers have adopted the individualistic approach from the developed countries through training abroad and through the scientific literature.

Conditions in the developing countries, therefore, alienate research from the current agricultural situation and lead to a dispersion of research among many crop and animal enterprises. Since human and financial scientific resources are limited, this dispersion of effort reduces the efficiency of research. The farmer finds only limited and incomplete information available, which does not permit the elaboration of a production system. Hence it is necessary to modify the diffuse model in such a way that the knowledge generated meets certain defined guidelines.

Historical Pattern in Brazil

In Brazil (with the exception of São Paulo and Rio Grande do Sul) human and financial resources are extremely limited. In addition, an organized mass of farmers does not exist to sensitize Brazilian authorities to the sector's

needs. As a consequence, the imported diffuse model cannot be expected to succeed in Brazil.

Until recently, the Brazilian agricultural research system had gradually developed an individualistic orientation; research topics and methodology were viewed as being the exclusive property of the investigators themselves even though research was completely financed by public money. Research priorities were aimed at sacred themes, and the directing of science and technology toward the solution of the entrepreneurs' problems was considered heretic thinking.

Scarce resources tended to be allocated to a wide variety of research topics defined by the researchers who, not rarely, were more eager to duplicate an investigation recently published abroad than to solve the farmer's problem. The style of working in research was a "one-man venture"; research tended to be designed in such a way that research teams were not used. The government's research investments were mainly an "act of good faith" rather than a goal-directed effort. This type of social background pervaded both the agricultural colleges and the more applied research units, namely, the agricultural experimental stations and institutes.

In short, the Brazilian agricultural research structure seems to have been negatively affected by two forces. On one hand, owing to the relative abundance of land and labor, there was little pressure for research to develop technology which economized on these factors. On the other, extremely individualistic research patterns were imported from developed countries.

The picture began to change at the beginning of the 1970s. Pressure developed to increase agricultural production in order to meet the increased domestic and international demand for food and fibers as well as the political need for feeding the urban population. These forces have created a new atmosphere for shifting from a diffuse research organization model to one in which concentrated research efforts predominate.

Changes in Brazilian Research

The role of science and technology in increasing agricultural productivity became one of the central concerns of Minister of Agriculture Dr. Luis Fernando Cirne Lima in late 1971. In early 1972, he called a meeting of all state secretaries of agriculture and agricultural experiment station directors and made it clear that the central government desired to modernize the research system to accomplish the newly defined national goals. At the same time, he nominated a special committee to recommend reforms in the agricultural research system.

The report of this committee pointed out the strengths and weaknesses of the federal research units. The positive aspects can be summarized as fol-

lows: (1) A geographically dispersed network of research units was available to the federal government and covered practically the whole nation. (2) Equipment and basic infrastructure were considered reasonably adequate for most of the units, with a total investment in land, building, laboratories, and other facilities totaling about $300 million. (3) Sixteen technical journals were available for publishing the results of agricultural research. (4) There was a small but well-qualified group of researchers whose talents could be better used by the units if their administrative load were assumed by other professionals. (5) A relatively well-defined consciousness of the need for an integrated research policy for the agricultural sector was present in most of the researchers.

The negative aspects, unfortunately, were overwhelming: (1) The basic national needs in respect to agriculture were unknown to most of the research personnel. (2) There was little interaction between research personnel and farmers. (3) The existing adminstrative structure inhibited the recruitment, training, and promotion of well-qualified personnel. (4) A complete lack of internal communication among units and individual researchers was evidenced by large numbers of parallel projects on unimportant products. (5) The lack of suitable programming and evaluation mechanisms permitted researchers to undertake individual activities of doubtful value. (6) Of 1,902 individuals considered to be formal researchers, only 10 percent could be considered professionals, with some kind of graduate training in research. (7) The salary policy did not permit the government to compete in the professional labor market; there were no means to hire and promote qualified personnel quickly or to demote unqualified persons. (8) Higher salaries given to administrators reduced researchers' incentives to argue for their projects. (9) There were inadequate mechanisms for obtaining and managing financial resources which came solely from the federal government. (10) All the existing facilities were underutilized.

The committee recommended a public corporation as the best institutional means to remedy these defects. The Congress, on December 7, 1972, created EMBRAPA as a public corporation to coordinate and administer research in agriculture and animal husbandry. EMBRAPA started operating on April 26, 1973.

The Basic Principles of the Present Brazilian Model

The basic tenet of EMBRAPA is that applied agricultural research should be guided by the concrete needs of the national society as expressed in government policies and in the concerns of farmers, extension agents, and industry. Execution of applied research directed toward immediate needs is seen as the

province of the technological research institutes. More fundamental research is seen as the province of the universities. There is not a rigid division of labor between the two types of research institutions. To a great extent, however, the comparative advantages of each are utilized in the two types of research.

Research units under the Ministry of Agriculture are generally in the first category. Their main effort should be directed toward generating technology which can be readily incorporated into the production system. This implies that emphasis should be given to creating technological packages that achieve technical and economic efficiency.

In addition to these general principles, six other ideas have been used as guidelines in reforming the existing research apparatus. First, the transfer of foreign technology to the agricultural sector is considered a valid means of improvement but of limited importance in many instances. The transfer of specific materials and of certain packages (i.e., poultry technology), however, is looked upon as an opportunity to capitalize on some other country's investments. Also, training abroad and imports of personnel are very helpful in the Brazilian situation.

Second, given the scarcity of financial and human resources for research activities, efforts should be concentrated on regional projects. This should help to overcome the difficulties of transferring technology among different ecological and economic regions throughout the country.

Third, the private sector should participate in the development of most of the research projects.

Fourth, the agricultural research system should have more administrative flexibility including the freedom (a) to obtain additional resources through contracts and agreements; (b) to pay researchers wages at market rates; and (c) to carry out an aggressive training program, including basic training and graduate work.

Fifth, a closer relationship should be developed with the extension services and the agricultural input industries to speed the dissemination of knowledge throughout the country.

Sixth, knowledge from the international institutes and from other foreign research centers should be adapted and spread throughout the country. The research system should seek technical packages which decrease the farmer's risk. This means that an economic investigation should be systematically included in the agronomic investigations.

The development of EMBRAPA implies the concentration of relatively large financial and human research resources on a limited number of products. The challenge that this model presents is that of defining priorities and responding to changing circumstances.

This type of orientation implies a number of problems:

1. Since resources are scarce, it is necessary to limit the number of production system prototypes developed and the number of commodities researched. Clearly, priorities must be established, but this means that some groups of farmers may not receive the benefits of research.

2. There are problems of allocation of resources between research with immediate applicability and that with applicability in the long run.

3. It may be difficult to use the concentrated research model to develop systems of production adequate to the needs of the small farmer who combines various enterprises in his operation.

4. The concentration of effort requires an appropriate institutional system. It is unlikely that research institutes which work on a large number of commodities and are organized on the basis of disciplinary departments such as soils and plant improvement will have a high degree of success in developing production systems. In this type of environment, given the individualistic tradition to which researchers are accustomed, pressures will develop that cause departure from the established priorities and areas of concentration. These pressures arise from the departments which seek to develop an area of specialization, as is common in the developed countries, and from researchers that have dedicated their lives to commodities not considered to be of national priority. It should be noted that the organization of research in institutes of this type is a consequence of the requirements of the diffuse model. In rejecting this model, it is also necessary to modify the institutional arrangements which made it possible.

Agricultural Research under EMBRAPA

EMBRAPA concentrates on applied research, to generate improved technology for agricultural development. However, it is not EMBRAPA's responsibility to perform all agricultural research in the twenty-five Brazilian states. As a consequence, two important roles have been defined for EMBRAPA. On one hand, it has the responsibility of creating and/or supporting the state research systems. On the other hand, it is responsible for creating and implementing commodity-oriented national research centers.

Supporting the State Systems

Agricultural research at the state level is very heterogeneous in Brazil. The southern states possess relatively mature research systems. EMBRAPA plans to continue supporting their activities. At the same time, it expects them to adopt more flexible administrative units (corporation-type agencies) to facilitate coordination between the state and EMBRAPA.

There are many other states, however, which have no research tradition

whatsoever, although many of them have been receiving research funds from the central government. In these states, EMBRAPA is helping the state governments to create their own capabilities. The main support up to now has been in training massive groups of research personnel as well as aiding the state secretaries of agriculture in organizing their own state corporations.

The National Centers

These centers are defined in terms of basic national needs for the agricultural sector. The main strategy is to concentrate funds and talents on a few, relevant products in specific regions. Wheat, sugarcane, corn, beans, soybeans, rice, coffee, rubber, livestock, and dairy have been defined as the crucial agricultural products for the country. Among the key resource areas to be developed through national centers, EMBRAPA has included "cerrado," semiarid agriculture, and humid-tropical agriculture.

State agencies can link themselves directly with the national research centers, particularly when they are located in the state where a given center is located.

The most important results obtained in the 1973-74 period are the following:

1. EMBRAPA replaced the National Department for Agricultural Research of the Ministry of Agriculture. The year 1973 was transitional and the corporation actually assumed the operation of research activities in 1974.

2. The realized budget of the old system in 1973 amounted to $14 million (United States currency, exchange rate of December 1973). In 1974 EMBRAPA expended about $25 million in research activities (exchange rate of December 1974). The planned budget for 1975 was estimated at $65 million (exchange rate of December 1974).

3. The old system was overcrowded with bureaucratic personnel. The corporation was, by law, allowed to select the personnel best suited for its work. It chose 3,422 (data of January 1975) out of 6,705 employees of the old system.

4. The training of personnel forms one of EMBRAPA's most important programs. The program's current goal is to enable 1,000 researchers to acquire the master's and/or doctoral degree in Brazilian and foreign universities. The program is financed by both Brazilian and foreign funds. Included in the latter is a USAID loan to the Brazilian government in support of the training of researchers at universities in the United States. At present, 500 researchers are studying for the M.S. or Ph.D. degree in various universities. Under the old system, 10 percent of researchers held graduate degrees. The aim of the present program is that at least 80 percent of EMBRAPA's researchers will hold the master's or doctoral degree.

5. National centers for the most significant products of Brazilian agriculture will be in operation by the end of 1976. Actually, the national centers for dairy cattle, rice, and wheat are already in operation. Three national centers for the development of natural resources will be in operation in 1976, one in the area of cerrado, another in the semiarid region of the Northeast, and a third – the Center for Tropical Agriculture – in the Amazonas region.

6. EMBRAPA is strengthening institutional linkages with Brazilian and foreign universities, with the international research centers, and with development banks to obtain technical and financial support for its program.

7. Three states have already reformulated their research systems according to the federal model. Their research projects are supported to some extent by EMBRAPA funds. In other states an institutional arrangement has been established with the purpose of strengthening their research capability and creating conditions favorable to the future conversion to the corporation system.

NOTES

1. A. C. Pastore, E. R. A. Alves, and J. B. Rizzieri, "Inovação induzida e os limites a modernização na agricultura brasileira," *Alternativas de desenvolvimento para grupos de baixa renda na agricultura brasileira*, 2 vols. (São Paulo: Instituto de Pesquisas Economicas, 1974).

2. São Paulo has traditionally been an exception to the general Brazilian pattern. In the state of São Paulo the increase in agricultural output has for several decades been almost entirely the result of increases in land productivity. See H. W. Ayer and G. E. Schuh, "Social Rates of Return and Aspects of Agricultural Research: The Case of Cotton Research in São Paulo," *American Journal of Agricultural Economics*, 54 (1972), 557-569; R. Evenson, "The Contribution of Agricultural Research to Production," *Journal of Farm Economics*, 49 (1967), 1415-25; Z. Griliches, "Research Costs and Social Returns: Hybrid Corn and Related Innovations," *Journal of Political Economy*, 66 (1958), 419-431; Z. Griliches, "Sources of Measured Productivity Growth: United States Agriculture 1940-1960," *Journal of Political Economy*, 71 (1963), 331-346; W. L. Peterson, "Return to Poultry Research in the United States," *Journal of Farm Economics*, 49 (1967), 656-669.

3. The term *diffuse model* is used to describe the institutional pattern that Hayami and Ruttan have referred to in their discussion of induced innovation. See Y. Hayami and V. W. Ruttan, *Agricultural Development: An International Perspective* (Baltimore: Johns Hopkins Press, 1971), pp. 53-63 and 82-85. The induced innovation model implies that government and private research agencies tend to concentrate their effort to generate the type of technology that saves the scarce and hence expensive factors of production. In this sense, the main lines of scientific and research policies really reflect the relative prices of land and labor in the case of agriculture. Institutional reform, on the other hand, is made possible and stimulated by the new opportunities opened up by changes in the relative prices of land and labor and by the increase in the demand for food.

19

Private Sector International Agricultural Research: The Genetic Supply Industry

S. M. Sehgal

There have been many instances, throughout the last three decades, of the transfer of elite cereal varieties and associated crop production technology from one agricultural zone to another of similar latitude. The International Maize and Wheat Improvement Center in Mexico (CIMMYT) has been responsible for transferring high-yielding varieties (HYV's) of wheat from the subtemperate/subtropical zone of Mexico to the subtemperate/subtropical zone of South Asia and the Near East. The International Rice Research Institute (IRRI) in the Philippines has been responsible for transferring HYV's of rice from the Philippine tropics to other areas within the tropical belt. The genetic supply industry has been instrumental in transferring high-yielding hybrid maize varieties from temperate North America to temperate Europe and hybrid sorghum varieties from subtemperate North America to subtemperate Mexico, Argentina, Australia, and South Africa. In all these cases the impact on total grain production has been dramatic.

High-Yielding Varieties

Since the HYV's of wheat and rice formed the basis of the green revolution, it is appropriate to outline some of the salient features of these two discoveries.

Wheat

The high-yielding varieties of wheat were developed largely by Norman Borlaug, using standard breeding techniques of hybridization and selection, at a small experiment station outside Ciudad Obregón in the state of Sonora in northwest Mexico. The station is located in Mexico's subtropical or semitemperate zone. The facilities at the station at the time Borlaug took over were, by modern institute standards, rather primitive.

The work was not intended for application in South Asia or any other region of the world; its purpose was to increase yields and to combat the rust which was plaguing wheat cultivation in Mexico at the time. Between 1945 and 1949, four rust-resistant varieties were developed which were widely planted. In later years, semidwarf wheats were developed by crossing the new rust-resistant varieties with Japanese dwarf wheat, *Norin* 10, and the new semidwarf varieties were released for cultivation in the early 1960s.

The seed was sent from Mexico to Pakistan and India in 1962. The purpose of sending seed to India was to screen these wheats against rust. In India the importance of the semidwarf wheats was first realized by Dr. M. S. Swaminathan in a small plot located at one corner of his nursery at the Indian Agricultural Research Institute, New Delhi. In Pakistan, too, the potential importance of the semidwarf wheats was first recognized in a small patch of land at the experiment station at Lyallpur.

Subsequently, an all-out effort was made to transfer these varieties and the related technology from the semitemperate zone of Mexico to the semitemperate zone of South Asia.

Rice

The first modern high-yielding rice variety was developed not by IRRI but in Taiwan. Called Taichung Native 1, it was a short-season, semidwarf variety. The IRRI scientists, recognizing the importance of Taichung Native 1, distributed it to several tropical areas of the world during the mid 1960s. The first high-yielding IRRI rice variety was IR-8; since its appearance several other IRRI varieties have been released. Although none of these newer varieties represent any improvement in yielding ability over IR-8, they do offer improved grain quality, disease resistance, and, to some extent, insect resistance.

It is interesting to note that the dramatic increases in wheat and rice yields which accompanied the green revolution have been matched or exceeded in several developed, temperate zone countries. For example, in 1972 the average *wheat* yield increases over the 1961-65 average in two leading developing nations were as follows: India, 64 percent; Pakistan, 43 percent. By comparison, yields rose in several developed nations as follows: France, 56 percent;

Table 19-1. Area, Production, and Average Yield of Wheat in Some Important Wheat-Growing Countries

Country	Years	Area (in 1,000 ha)	Production (in 1,000 MT)	Yield per Hectare (in 100 kgs)	Yield Increase (%)
Bulgaria . . .	1948-52	1,432	1,776	12.4	
	1961-65	1,222	2,213	18.1	46[a]
	1972	961	3,582	37.1	105[b]
France	1948-52	4,264	7,791	18.3	
	1961-65	4,265	12,495	29.3	60[a]
	1972	3,958	18,123	45.8	56[b]
India	1948-52	9,290	6,087	6.6	
	1961-65	13,402	11,191	8.4	27[a]
	1972	19,139	26,410	13.8	64[b]
Pakistan . . .	1948-52	4,218	3,685	8.7	
	1961-65	4,984	4,152	8.3	– 5[a]
	1972	5,797	6,890	11.9	43[a]
United States	1948-52	27,756	31,065	11.2	
	1961-65	19,432	33,040	17.0	52[a]
	1972	19,135	42,045	22.0	29[b]
U.S.S.R. . . .	1948-52	42,633	35,759	8.4	
	1961-65	66,622	64,207	9.6	14[a]
	1972	58,492	85,950	14.7	53[b]

Source: FAO Production Yearbook, 1972.
[a] Increase in yield over 1948-52.
[b] Increase in yield over 1961-65.

Table 19-2. Area, Production, and Average Yield of Rice in Some Important Rice-Growing Countries

Country	Years	Area (in 1,000 ha)	Production (in 1,000 MT)	Yield per Hectare (in 100 kgs)	Yield Increase (%)
India	1948-52	30,092	33,383	11.1	
	1961-65	35,587	52,752	14.8	33[a]
	1972	36,019	57,950	16.1	9[b]
Indonesia. . .	1948-52	5,876	9,441	16.1	
	1961-65	7,036	12,393	17.6	9[a]
	1972	7,983	18,031	22.6	28[b]
Japan	1948-52	2,996	12,736	42.5	
	1961-65	3,281	16,444	50.1	18[a]
	1972	2,581	15,281	59.2	18[b]
Philippines	1948-52	2,350	2,767	11.8	
	1961-65	3,147	3,957	12.6	7[a]
	1972	3,112	4,415	14.2	13[b]
Thailand . . .	1948-52	5,211	6,846	13.1	
	1961-65	6,394	11,267	17.6	34[a]
	1972	6,571	11,660	17.8	> 1[b]
United States	1948-52	752	1,925	25.6	
	1961-65	705	3,084	43.7	71[a]
	1972	736	3,875	52.7	21[b]

Source: FAO Production Yearbook, 1972.
[a] Increase in yield over 1948-52.
[b] Increase in yield over 1961-65.

United States, 29 percent; the Soviet Union, 53 percent (Table 19-1).[1] Similarly average *rice* yields per hectare, during the same time period, increased as follows in developing nations: India, 9 percent; Indonesia, 28 percent; Philippines, 13 percent; and Thailand, 1 percent. By comparison, yields increased 18 percent in Japan and 21 percent in the United States (Table 19-2).

Maize and Sorghum

During the past forty to fifty years, vast improvements in maize and sorghum yields have taken place in almost all temperate countries and a few tropical countries where hybrid seed of these two crops is used.

The introduction of hybrid maize to Western Europe after World War II and to Eastern Europe in the late 1950s and early 1960s revolutionized maize production in Europe, as it had in the United States before World War II.[2] In Bulgaria, France, Italy, Romania, and Yugoslavia, the national average yields in 1961-65 were substantially above the 1948-52 average levels. The same was true of 1972 yields as compared with the 1961-65 level (Table 19-3).[3]

The transfer of grain sorghum hybrids from the United States to Mexico, Argentina, Australia, and South Africa took place in the late 1950s and early

Table 19-3. Area, Production, and Average Yield for Maize in the United States and in Major European Countries Where Hybrids Are Used

Country	Years	Area (in 1,000 ha)	Production (in 1,000 MT)	Yield per Hectare (in 100 kgs)	Yield Increase (%)
Bulgaria . . .	1948-52	737	720	9.8	
	1961-65	632	1,601	25.3	158[a]
	1972	689	2,974	43.2	70[b]
France	1948-52	332	452	13.6	
	1961-65	914	2,760	30.2	122[a]
	1972	1,880	8,190	43.6	44[b]
Italy	1948-52	1,253	2,306	18.4	
	1961-65	1,108	3,633	32.8	78[a]
	1972	892	4,802	53.8	64[b]
Romania . . .	1948-52	3,089	2,495	8.1	
	1961-65	3,308	5,853	17.7	118[a]
	1972	3,197	9,817	30.7	74[b]
United States	1948-52	29,856	74,308	24.9	
	1961-65	22,933	95,561	41.7	67[a]
	1972	23,237	141,568	60.9	46[b]
Yugoslavia	1948-52	2,297	3,078	13.4	
	1961-65	2,474	5,618	22.7	69[a]
	1972	2,383	7,940	33.3	47[b]

Source: FAO Production Yearbook, 1972.
[a] Increase in yield over 1948-52.
[b] Increase in yield over 1961-65.

Table 19-4. Area, Production, and Average Yield for Sorghum in the United States and Other Important Countries Where Hybrids Are Used

Country	Years	Area (in 1,000 ha)	Production (in 1,000 MT)	Yield per Hectare (in 100 kgs)	Yield Increase (%)
Argentina	1948-52	77	73	9.5	
	1961-65	856	1,359	15.9	67[a]
	1972	1,564	2,502	16.0	> 1[b]
Australia . . .	1948-52	57	75	13.3	
	1961-65	154	228	14.8	11[a]
	1972	639	1,228	19.2	30[b]
Mexico	1948-52				
	1961-65	205	452	22.1	
	1972	965	2,593	26.8	21[b]
South Africa	1948-52	283	180	6.4	
	1961-65	296	295	10.0	56[a]
	1972	380	556	14.6	47[b]
Spain	1948-52	5	4	7.3	
	1961-65	9	19	21.1	189[a]
	1972	44	177	40.2	91[b]
United States	1948-52	3,087	3,897	12.6	
	1961-65	4,909	13,912	28.3	125[a]
	1972	5,410	20,556	38.0	34[b]

Source: FAO Production Yearbook, 1972.
[a] Increase in yield over 1948-52.
[b] Increase in yield over 1961-65.

1960s. This introduction of better yielding United States-bred hybrids revolutionized grain sorghum production in each of these countries.

Before the introduction of hybrids into Mexico, total sorghum grain production in Mexico was negligible, whereas in 1972 over 2.5 million tons of sorghum grain were produced (Table 19-4). Furthermore, Mexico recorded national average yields comparable to those in the United States. Mexico did not make significant improvements in average yields in subsequent years, however, whereas average yields in the United States kept going up owing to considerable improvement in farming practices.

Striking increases in production also took place in the Southern Hemisphere (Table 19-4). In Argentina over 2½ million tons of sorghum grain were produced in 1972 as compared with less than 100,000 tons before the introduction of hybrid sorghum. From 1948-52 to 1961-65 yields increased significantly in Argentina and in South Africa. Because of its strict quarantine requirement, Australia was four to five years behind in utilizing the United States hybrids, and, as a consequence, improvement in average yield in 1961-65 in that country was more modest.

Some of the European countries which can grow sorghum recorded even higher gains than the countries in the Southern Hemisphere.

Genetic Supply Industry

The genetic supply industry has, to a great extent, been responsible for bringing about these increased yields by developing, multiplying, and distributing hybrid seed to the farmers.

The scientific basis for hybrid maize and hybrid sorghum, as well as for a host of other hybrid plants and animals, is the phenomenon known as "heterosis" or hybrid vigor. Heterosis can be defined as the increased vigor occurring in the progeny of crosses among inbred parents, varieties, or races. It has been said that this phenomenon, more than any other, has revolutionized the agriculture of the United States.

The genetic supply industry has attempted to exploit this phenomenon to the greatest extent possible within the existing body of scientific knowledge on the subject. There are two primary reasons for this interest.

First, until the United States Plant Variety Protection Act was promulgated in 1972, there was no law to protect the varieties produced by private breeders of open pollinated varieties. The hybrids, because of their built-in protection, offered security to private breeders. In other words, the hybrids offered what is known in the trade as "proprietary" varieties.

Second, since hybrids had superior performance over the open pollinated varieties, the seed could be sold to the farmers at a price which assured breeders far greater and far more certain profits than if they were sold the seed of commonly available varieties. Since the true hybrids are available only through the original breeder or his distributor, the breeder has repeat customers year after year if the product performance is satisfactory to the farmer. The combination of these two factors – the large benefits that accrue to the users of genetically improved seed stock and the proprietary nature of many seed stocks – made the genetic supply industry flourish in the United States.

Until recently, the overseas research and development work of the United States industry has remained more or less limited to the transfer of temperate varieties and technology to temperate areas of the world. For example, all the major United States seed companies are active in Western Europe as well as in other temperate areas of the Southern Hemisphere.

Although there has been a great deal of interest on the part of the genetic supply industry in contributing its know-how to the developing countries, few efforts to accomplish this have been made to date.

Pioneer Hi-Bred International is unique in this respect. In 1964, it established the Tropical Research Station in Jamaica, West Indies, primarily to develop maize hybrids adapted to the lowland tropics. The station is located in the lowlands, at 18^{0} N latitude.

Improved populations and varieties, some of which were collected by Dr.

W. L. Brown while he was a Fulbright scholar at the College of Tropical Agriculture, St. Augustine, Trinidad, were used as the station's foundation stock and source-breeding materials. Also, several improved breeding populations were received through the courtesy of the Rockefeller Foundation and CIMMYT in Mexico.

The classical inbred-hybrid method of maize improvement was used to develop hybrids, this method having previously been successfully employed by breeders, both commercial and private, in the United States.

The work on maize was carried out during the period from 1964 to 1968 on an average of ten acres of land and with an annual budget of less than $15 thousand. (The station's total annual budget was $30 thousand, a little over half of which was spent on sorghum research.) In 1966-67 the first experimental hybrids were entered in tests throughout the Caribbean and Central America, and, in 1968, after only four years of operation, the station released for commerical cultivation in the Caribbean and Central America two yellow hybrids, X304 and X306. Two years later, it released two white hybrids, X101A and X105A, for commercial use.

Table 19-5 shows the performance of the yellow hybrids in several Caribbean countries in 1968-69. These hybrids gave significantly higher yields than local varieties. In some instances, the yield increases were more than double.

Trials were also conducted in parts of Central America, West Africa, East Africa, and South East Asia. As in the Caribbean, the hybrids from Jamaica were among the highest yielding hybrids in the tests.

It is a well-known fact that, regardless of the success of breeders in breeding improved varieties and hybrids, the impact of such developments on agricultural production is zero unless the same varieties reach the farmer, not only in quantity but in a state which maintains the original genetic potential of the variety.

Among the cereals, the nature and requirements of seed production and distribution vary greatly depending upon the species involved and its mode of reproduction. In wheat and rice, both of which are self-pollinated species, the multiplication of seed is a rather simple process. All that is needed to reproduce a variety in large quantity is simply to grow and harvest the crop while exercising care to maintain varietal purity by avoiding mechanical mixtures of seed. However, in the case of maize, which is almost completely cross pollinated, and sorghum, which is partly cross pollinated, the situation is entirely different. To maintain purity of hybrids, fertilization must be controlled; consequently, the methods of large-scale production of quality seed are much more sophisticated than are those used with self-pollinated species.

There is little doubt that the large-scale, successful introduction of high-yielding varieties of wheat and rice into several developing countries in recent

Table 19-5. Performance of Hybrid Corn versus Local Corn in the Caribbean in 1968-69

	Yield (in quintals per hectare at 15.5% moisture)						
Variety	Jamaica	Haiti	Dominican Republic	Grenada	Barbados	Trinidad	Guyana
Hybrid X306	54.7	59.6	63.4	39.2	30.6		45.2
Hybrid X304	56.2	44.1	55.9	35.2	40.4	54.2	47.7
Local Variety . . .	24.9[a]	32.9[b]	38.9[c]	17.1[d]	19.1[e]	27.9[f]	30.1[g]

[a] Jamaica selected yellow.
[b] Jeremie.
[c] Frances.
[d] Grenada corn.
[e] Barbados corn.
[f] Economic botany selection.
[g] Charity.

years was, to a considerable extent, a result of the reproductive mechanism of the species. On the other hand, there is little doubt that the failure of the international maize program of the institutes is largely attributable to a failure to develop satisfactory systems of seed production and distribution. The quality of breeding that has gone into international maize improvement programs is comparable to that characterizing the self-pollinated cereals, yet the impact of increased productivity has been negligible compared with that of wheat and rice.

As a profit-oriented private company, we realized that the breeding of new hybrids and the multiplication and marketing of seed must be closely coordinated in order to bring the results of research to the farmers in the shortest possible time. And since research must be financed from profits, the seed must be sold at a price that provides adequate profit to sustain research.

With these objectives in mind, we established modest seed production and distribution facilities, first in the Caribbean, in 1968-69, and later in Central America, in 1970-71. Our four years of experience in marketing hybrid seeds in Central America have shown the following:

1. If a hybrid performs, farmers will buy the seed year after year. And, contrary to widespread belief, small as well as large farmers can and will buy hybrid seed: anywhere from 10 percent, in Panama, to 80 percent, in Nicaragua, of our hybrid seed customers are small farmers.

2. There is no doubt that hybrids are bred to take advantage of better than average farming conditions. However, even under average growing conditions they do perform significantly better than the local varieties, thus contributing to increased yields at the farm level.

With our tropical research and distribution of seed well under way in Central America, we extended our activities to other developing areas of the world, including Brazil, India, and, more recently, the Philippines. The results obtained in each country are similar to those obtained earlier in Central America and the Caribbean. In Brazil, we have two yellow maize hybrids under seed production, and seed is being successfully marketed there.

In India, we started with limited seed production in 1974, and we are scheduled for greater production in 1975-76. The hybrids being produced in India are X102 and X104. These were developed at our Hyderabad Research Station from inbred lines supplied by the parent company from the United States and Jamaica. Tests conducted in Andhra Pradesh during the 1973-74 season revealed that these varieties outyielded the best available local hybrids (Ganga-5 and Deccan) by 17.4 to 31.0 percent at each of nine locations.

All our overseas research stations undertake research on hybrid sorghum as well as hybrid maize, and most of our overseas producer-distributor organizations which produce and market hybrid corn seed are also marketing hybrid sorghum seed.

In this chapter, I have attempted to point out what can be done in crop improvement research with limited resources of manpower, capital, and land. The approach of our company has been what is called a "small experiment station" approach. The philosophy behind this method is that described by Wallace and Brown in their book *Corn and Its Early Fathers*.[4] As they have put it:

> [T]here are dozens of plantbreeders who can point to the fact that when they were living very close to their plants, seeing them every day, and spreading attention thickly over a small area, they got many times greater a return per hundred square feet than they did when working with large numbers of plants covering acres of land.
>
> The modern trend in *plant breeding* is in exactly the opposite direction. The present emphasis is directed toward doing things in a big way, toward the use of large numbers and "coordinated research" . . . toward the use of large areas of land, and in many cases, routine types of investigation and thought. The work accomplished is often measured in terms of budget size, of the number of pollinating bags used, or the number of acres devoted to yield testing . . .
>
> The point we are making is that lots of land, equipment and power can never produce scientific advancement in plant breeding or anything else unless ideas are big enough to match. And unfortunately, when the equipment, land and manpower pass a certain point of immensity, the men who are supposed to do the scientific thinking tend to become mere administrators, making the wheels go around, keeping records, compiling tables, but not thinking often enough or hard enough about the next fundamental step forward.

The early HYV's of wheat and rice were developed when research facilities were, by modern standards, rather "primitive."

Conclusions

The goals of research work at the international institutes and in the genetic supply industry are the same: that is, to help farmers to produce more per unit of land area than they are now producing. In our comp ay there is a common saying: "What is good for the farmer is good for us"; therefore we have a strong interest in the farmer's welfare. However, the decisions that set the scope and direction of private research are motivated by a strong vested interest in contrast to those which allocate and direct research at the institutes.

There are several areas in which some sort of relationship between the institutes and the private sector already exists and in which exchange of information has been occurring. However, there is a need to strengthen this relationship considerably. For example, one of the areas in which cooperation between the two could be expanded is in the exchange of breeding materials. It is well known that the effectiveness of a breeding program is, to a large degree, dependent upon the extent to which elite breeding materials are present in a breeder's nursery. It is therefore highly desirable to establish an exchange of breeding materials between the two on a more or less regular basis.

Another area in which the private sector and the institutes can expand their cooperation is in variety evaluation work. At present, there are several regional test programs in which institute scientists are directly or indirectly involved, for example, the Central American Cooperative Project for the Improvement of Basic Food Crops (PCCMCA) in Central America, the Inter-Asian Corn Program (IACP) in Asia, the East African Maize Variety Trials (EAMVT) in East Africa, and the West African Uniform Maize Trials (WAUMT) in West Africa. The private sector could benefit greatly if it could have its varieties/hybrids evaluated and obtain meaningful information through the worldwide contacts of the institute scientists.

Seed production and distribution form another area in which cooperation between the institutes and the genetic supply industry can play a significant role in increasing the productivity of farmers.

The common method of wheat and rice improvement in the temperate countries is, and has been, hybridization and selection. In the late 1950s and early 1960s there was a general trend to breed short, early, fertilizer-responsive varieties of several crops, including important cereals. CIMMYT and IRRI scientists successfully exploited these techniques to evolve high-yielding varieties.

For maize and sorghum, however, the most widely and successfully employed method of improvement is the inbred-hybrid method. In other words, improvement of these two crops is based upon exploitation of controlled heterosis. Much of the maize breeding now being done by the international institutes, however, emphasizes the development of improved synthetics and populations and largely ignores the use of hybrids. The reason most often given for this approach to breeding is that farmers in most developing countries do not employ sufficiently advanced technology to make good use of hybrid seed. As we have pointed out earlier, we have not found this to be true. A more realistic reason is the failure of the institutes to work out satisfactory systems of seed production and distribution of hybrid varieties in the developing countries. Instead of making an all-out effort to resolve the problem of seed production and distribution systems, the institutes have discontinued work on an effective and proven breeding methodology.

The hybrid approach to improving corn and sorghum offers tremendous flexibility because a hybrid is the product of at least two parents in the case of a single cross, three parents in a three-way cross, and four parents in a double cross. By combining lines (parents) with different qualitative traits with regard to disease and insect resistance and the like, one can have great diversity among the hybrids which are put on the market.

Regardless of the methods employed, the objectives of the international institutes and the private sector, as mentioned earlier, are the same – that of improving agricultural productivity. There is every reason, therefore, for increased cooperation between the two groups. Both are now engaged in varietal improvement, and both will no doubt continue this activity. It would seem that the institutes are much better prepared than the private sector to provide the extension service so badly needed in the Third World. The private sector, on the other hand, is much better equipped to provide those services associated with seed production and distribution.

Agricultural research need not always be expensive in manpower, capital, or land. Increased cooperation between public and private sectors can further reduce these costs and increase efficiency.

NOTES

1. In addition it may be noted that yields rose 67 percent in Hungary and 64 percent in Romania.

2. United States-bred hybrid and/or inbred lines. The most widely spread United States hybrids were W240, W255, W275, W355A, W416, W464 among the early maturity group; Iowa 4417, Wisconsin 641AA, Nebraska 301 among the medium maturity group; and U.S. 13, Ohio C92, and Kansas 1859 among the late maturity group.

Several United States inbred lines were used extensively in hybrid combinations with

the European lines. These are WF9, 38-11, C103, Hy, OH43, OH7, OH51, W22, K148, K150, N6, and M14 for the Danube Plain and other regions of southeastern Europe. For the northern European production zone, early maturity lines such as W153, W37A, W19A, W41A, W59E, W9, WD, A374, A375, M13, and 1205 were commonly used.

3. Moreover, yields rose substantially in both periods in Czechoslovakia, Hungary, and Spain.

4. H. A. Wallace and W. L. Brown, *Corn and Its Early Fathers* (East Lansing: Michigan State University Press, 1956).

20

A Systems Approach to Agricultural Research Resource Allocation in Developing Countries[1]

Per Pinstrup-Andersen and David Franklin

Effective agricultural development requires the interaction of farmers and rural institutions working within constraints imposed by their socioeconomic and ecological environments. For the effective allocation of their scarce human and financial resources, institutions such as those involved in public agricultural research must take into consideration the needs of farmers as well as overall national, social, and economic goals. Decision-making on agricultural research resource allocation has received less attention than has farmer decision-making. As a consequence, there is a shortage of both useful data and effective techniques for their analysis.

While improved productivity and increased production may be the immediate goals of applied agricultural production research, they are at the same time the means to reach some final goals such as improved human nutrition, a more equitable income distribution, and increased foreign exchange earning. Agricultural research institutions are presumed to seek ways to produce more and/or better food, feed, and fiber at a reduced per unit cost and in such a way as to maximize the contribution of agriculture to the achievement of ultimate social and economic goals. Hence, there is a need for effective means to assist in predicting the relative contributions and costs of alternative research activities in order to establish research priorities and allocate available research resources.

This chapter suggests a systems approach to the collection and analysis of

information expected to be useful for establishing such means.[2] The first part offers a brief discussion of means and ends in agricultural research. This is followed by an outline of a scheme for data collection and analysis; the chapter terminates with a discussion of some of the information-generating efforts currently under way in CIAT.

Means and Ends in Agricultural Research

A clear understanding of the distinction between final and immediate goals on the one hand and means to reach these goals on the other is essential to appreciate fully the need for improved tools for research management and to assure that such tools are relevant for establishing research priorities. For example, while increased production may be an immediate research objective, it is not a final goal of agricultural research but rather a means to reach some final goals such as improved income distribution or improved nutrition. In a similar fashion, improved income distribution, although it may be a final development goal, does not serve as a working objective for the agricultural scientist.

To help clarify the distinction between means and goals, Figure 20-1 outlines the process by which applied agricultural production research may contribute to the achievement of social and economic goals. Successful applied agricultural research produces knowledge and/or improved material, e.g., seed. The knowledge and improved material may be fed back into the research process for further work, or it may be released to the farmers as new technology. There are three – and only three – potential direct contributions of such technology: (1) increasing *technical efficiency*, a measure of output per unit of input where both output and input are expressed in physical terms (e.g., production per hectare) of at least one resource; (2) changing the *characteristics and composition of products* and developing new products (e.g., developing plant types more suited to mechanization and improving the amino acid composition in the protein of a given crop); and (3) reducing *production risk*. Any other contribution will be indirect, that is, it must come about as a consequence of one or more of the three direct contributions.

There are three potential results of the direct contributions listed above: (1) changing the composition and quantity of the aggregate supply of food, feed, and fiber; (2) changing the composition and quantity of the aggregate resource demand, e.g., increased or decreased employment; and (3) changing the composition and quantity of aggregate domestic farm consumption. Any of these results may contribute to the achievement of national development goals through changes in elements such as farm income and its distribution among groups of farmers, relative resource earnings, consumer real income

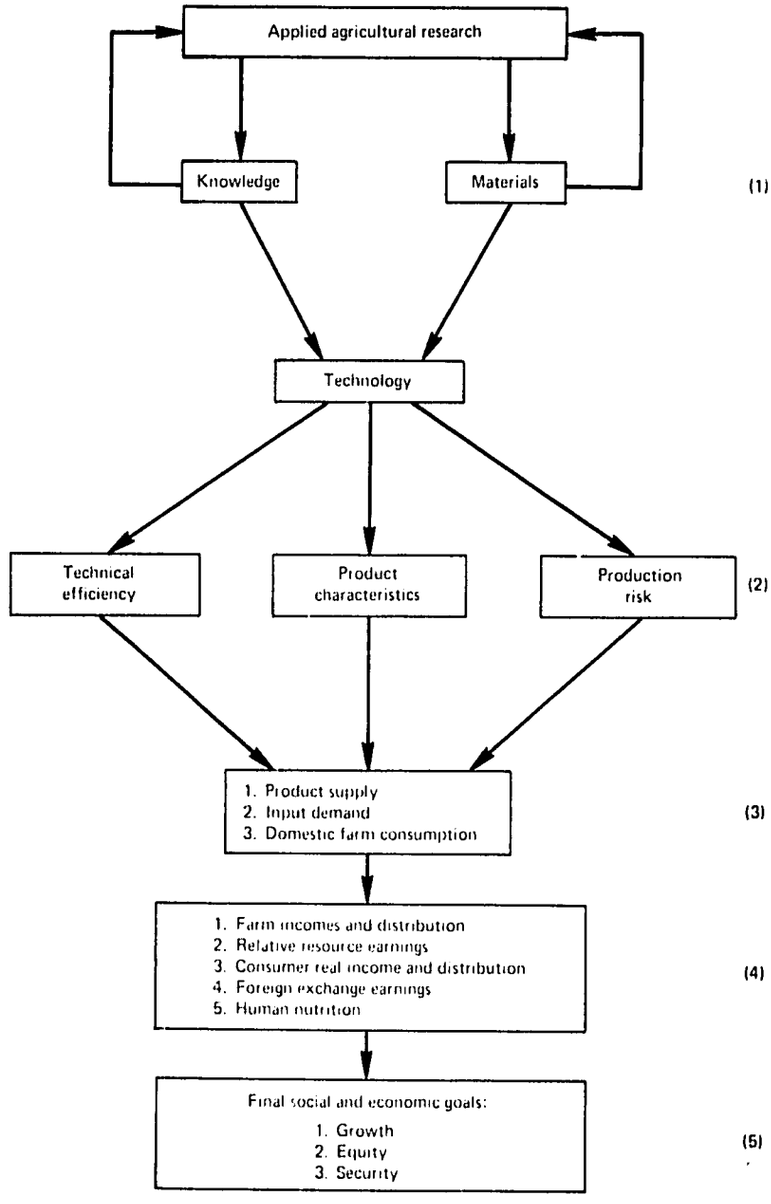

Figure 20-1. Illustration of the potential outcomes and implications of agricultural research.

and its distribution among consumer groups, foreign exchange earnings, and human nutrition.

Viewing agricultural research and its potential outcomes and implications as a process reduces the confusion over means and ends. The first level of outcomes (marked by (1) in Figure 20-1) is clearly a set of means, except when research is carried out for its own sake. The second level represents the working objectives for the agricultural production scientist. For research management and society as a whole, however, this level expresses alternative approaches to the goals shown in the fourth level. The third level in Figure 20-1 represents the vehicle by which activities meeting the scientist's working objectives influence the achievement of the final goals. In other words, changes in product supply, input demand, and domestic farm consumption are not themselves goals but are means to final goals.

Two conclusions may be drawn from the discussion above. First, the working objectives for the agricultural production scientist must be expressed in terms of technical efficiency, desired product characteristics, and/or production risk. The specific working objectives and the most effective technology to reach these objectives should be determined on the basis of national development goals. Concurrence between the technology specification received by the scientist and the technology which results in maximum contribution to the achievement of social goals is the responsibility of research management.

Second, research management needs information for research resource allocation that is capable of both translating national development goals into working objectives for the agricultural production scientist and helping the production scientist select the most effective technology to reach the working objectives.

A Suggested Information System

An effective information system for the allocation of resources in applied agricultural production research must be capable of providing research management with reliable data that will make possible the establishment and the periodic review of research priorities in such a way as to maximize the expected contribution from research to the achievement of national development goals. The system should also provide a frame of reference within which project priorities can be established and individual projects can be accepted or rejected without great time delays. Extreme care must be taken to avoid a system that imposes heavy bureaucratic procedures on the production scientists.

The system should be sufficiently comprehensive to improve currently available methods. However, the decision on how much should be spent on

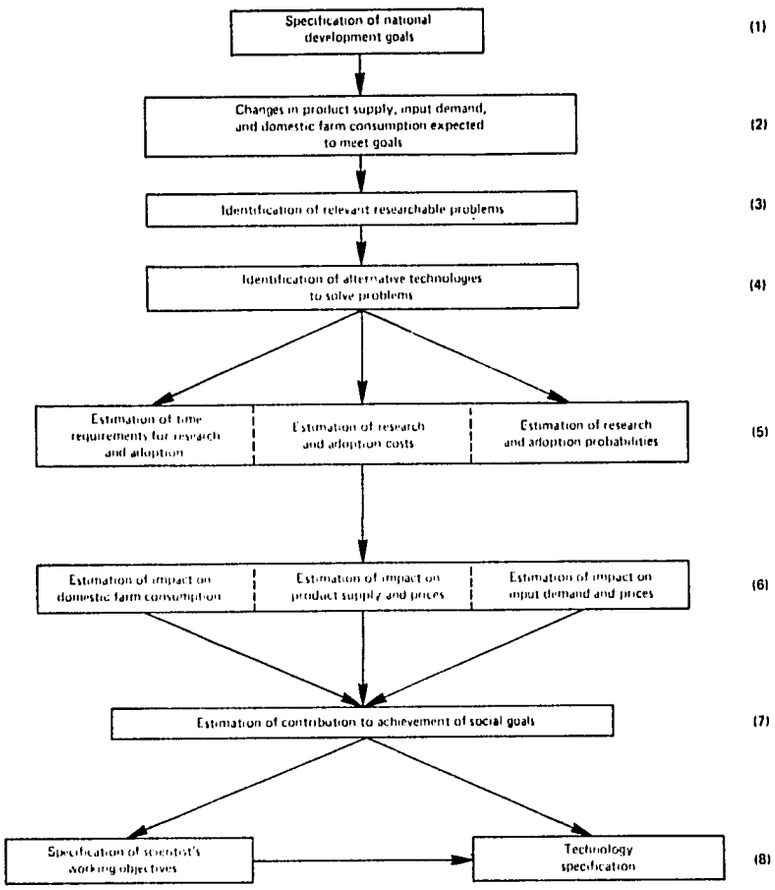

Figure 20-2. Outline of a series of steps needed to translate national development goals into working objectives and technology specification.

achieving such a system must be based on the same principles as those used to allocate resources among alternative agricultural research activities.

Before the data requirements and the conceptual model are discussed, it may be useful to illustrate a series of steps necessary to translate national development goals into working objectives for use by the scientist and in technology specifications. The illustration is shown in Figure 20-2.

It is essential that the development goals be clearly specified. The changes in product supply, input demand, and domestic farm consumption expected to meet some or all of these goals should be identified. Then the researchable problems, the solution of which is expected to accomplish such changes, must

be identified. At this point no attempt should be made to quantify the expected contributions to development goals.

Let us assume, as an example, that one of society's goals is to increase protein intake among protein-deficient groups of the population. It may be expected that – among other activities – increased production of grain legumes, animal products, and high protein cassava may make a contribution. The researchable problems limiting production of these commodities, e.g., a particular disease in field beans, the nonavailability of a high protein cassava variety, etc., should then be identified.

It is important that the problems limiting the achievement of established objectives be identified independently of possible solutions, i.e., a "technology-free specification of the problem" should be outlined. For example, if the problem is one of low yields, it should be expressed in terms of the factors causing low yields, such as lack of insect resistance, rather than specified as a problem of developing an insect-resistant variety. This is because alternative solutions to the problem of the lack of insect resistance do exist. As such, the technology-free specification of the problem provides an implicit measure of the potential value of assembling technology to solve a particular problem. The technology-free specification of the problem has to identify the farmer's needs and convert these needs into a specification of the parameters and constraints that must be satisfied by the technological innovations.

When the relevant researchable problems are identified, the alternative technologies expected to solve the problems should be specified. Then the cost, probability, and time requirements of both research and farm adoption should be estimated for each proposed technology. Based on these estimates, as well as on the nature of the problem, the structure and performance of the production sector, and the input and product-market relationships, it is now possible to estimate the impact of solving each of the problems on product supply, input demand, and domestic consumption. The last step before specifying the scientist's working objectives and the technology to be developed refers to a quantitative estimation of the contribution of alternative research efforts to the achievement of national development goals.

Data Requirements and Sources

From the broad framework presented above, it is now possible to specify the data requirements and the possible sources of these data. An exact specification of data requirements is not attempted.[3] Four sources of data are discussed: the farm sector, the market sector, the research sector, and the government.

Farm sector data. Allocation of resources in applied agricultural research is frequently made without sufficient knowledge about the existing problems

and their relative economic importance in the production process. Communication between the farm sector and the research institute is often deficient, and the needs at the farm level for problem-solving research may not be well known by the researchers.

Farmers in most developing countries – except perhaps those who maintain large commercial operations and/or are members of efficient producer associations – tend to have severe difficulties in communicating their research needs to the research institutes because of institutional and social barriers. Because of this situation, some research may be irrelevant to actual farm problems, and research results may not be adopted.

There is urgent need for a system that will provide a continuous flow of information to the production scientists and other persons who make decisions on the increase in production, productivity, and risk likely to result from such research activities as developing resistance to specific diseases and insects, improving cultural practices, improving plant types, and changing plant responses to nutrients. Furthermore, information is needed on the farmers' preferences with respect to new technology and on how these preferences may be changed so that attention can be given to the development of technology with a high probability of adoption.

Such a system can easily be developed where there is a continuous feedback of information from the farmer through the extension service to the research agency. Unfortunately, such feedback is rare in developing countries, and it is not likely to take place on a national scale in the very near future. In the meantime, the essential information can probably best be obtained through organized surveys, including field observations. In addition to surveys, it may be necessary to carry out controlled experiments to determine the degree to which each of the various researchable problems leads to a reduction in yield. While field surveys will provide information on the area affected by each of the researchable problems and some indication of their yield-depressing impact, controlled experiments on yield losses will provide more exact information on yield-reducing effect. Together the two data sources offer a sound basis for estimating production and productivity impact of research on each of the problems specified. The impact of research on risk can be estimated from survey data on the past occurrence and severity of problems (e.g., pests, climate, etc.) and the resulting yield variances.

Market sector data. Information on the structure and performance of product and input markets is essential to predict the contribution of alternative research efforts to the achievement of development goals.

Existing and expected future product-demand relationships may be very unfavorable to the expansion of the supply of certain commodities while favorable to the expansion of others. In this regard, demand elasticities are

needed to estimate the expected impact on prices and on the distribution of benefits between producers and consumers. In the case of new products or drastic changes in traditional products, it is important to predict consumer preferences either before research is initiated or at as early a stage in the research as possible. Although a certain change in a traditional product may make it "better," using some objective measure such as nutritional value, the consumer may find it less acceptable than the original product. A number of cases could be cited where "good" products have been developed through research, only to find that they were unacceptable to the consumer. Had the consumer preferences been checked out at an earlier stage, a considerable amount of research resources might have been saved.

Instead of allocating research resources to fit existing product market relationships, it is frequently possible to change the market relationships to fit the research results. For example, consumer preferences may be changed or new markets may be found. It is important to predict how these relationships would behave in the case of supply expansion if adequate public policy measures aimed at facilitating the necessary changes are to be recommended.

The impact of new technology on input demand will depend on the particular technology developed. Hence, before the decision is made on the type of technology to develop, information should be obtained on existing and expected future input-supply relationships.

Research sector data. Data are needed to estimate the costs and the time requirements of research as well as the likelihood of achieving desired results. Because of the very nature of research, its outcome can rarely be predicted with great precision. It is argued here, however, that efforts to achieve at least some crude predictions of outcomes, on the basis of existing scientific knowledge, are likely to make resource allocation in applied agricultural research considerably more efficient.

Government sector data. Development goals may be classified under three general headings: growth, equity, and security. Although specific development goals may differ considerably among countries, all three of these general goals are usually found in some form.

The development goals must be clearly defined and, if possible, the socially acceptable trade-offs among them should be specified.

At present, research management tends to have very limited information on these issues, and research priorities tend to be based exclusively on the objectives of increasing production and productivity.

The Conceptual Model

Figure 20-3 is a conceptual model for an information system for resource allocation in applied agricultural research. The figure outlines the relation-

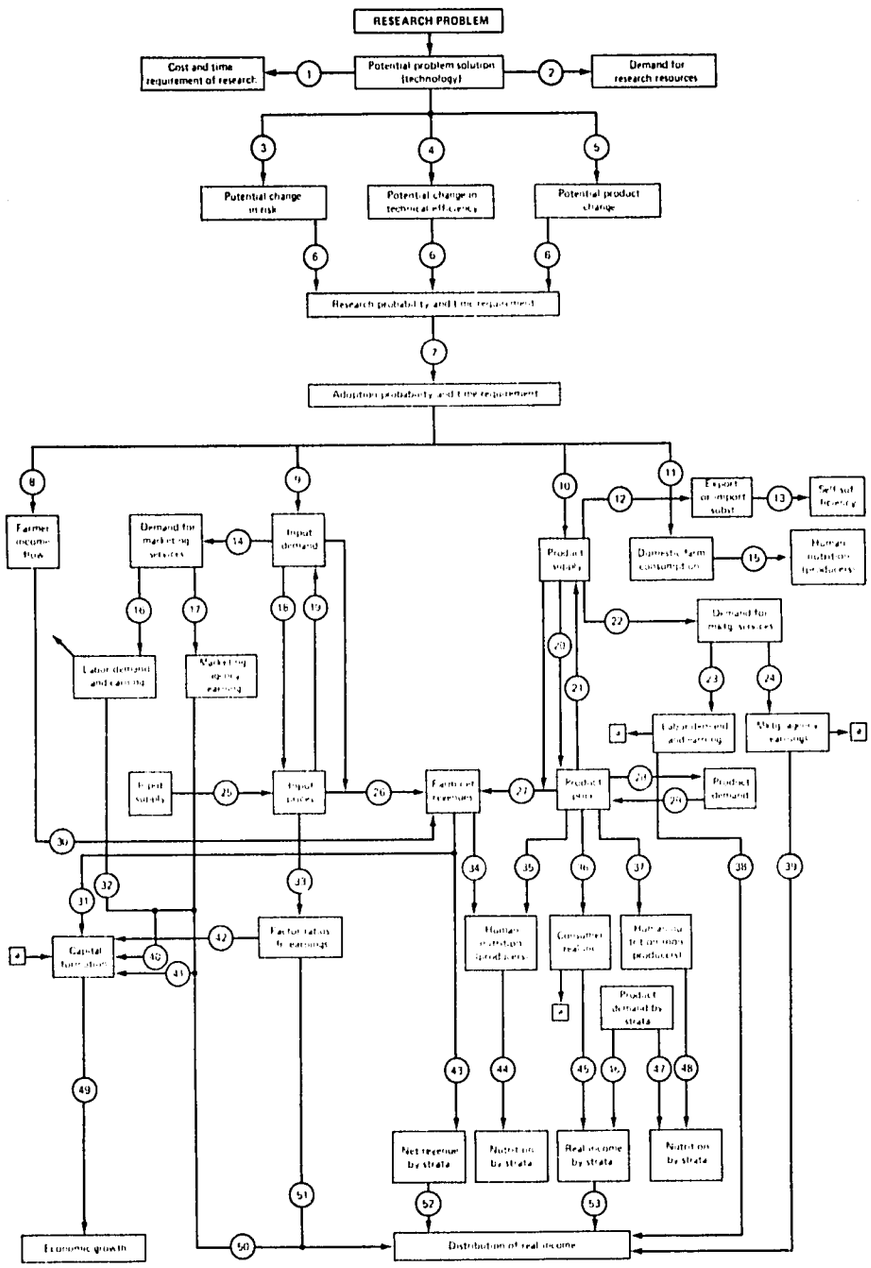

Figure 20-3. Flow diagram for an analytical model for an information system for resource allocation in applied agricultural research.

ships determining the expected contribution of alternative research efforts to the achievement of selected development goals. It also outlines some of the implicit relationships we believe should be considered when decisions are made regarding resource allocation in applied agricultural research. It is not suggested here that a quantitative model incorporating all these relationships be constructed. Rather, what is intended by presenting the model is to make explicit the entire range of relationships, so that when a particular subset of relationships is analyzed the assumptions about the excluded relationships are made explicit.

The following social goals are considered in the model: (1) economic growth; (2) more equitable income distribution; (3) increased productive employment; (4) increased net incomes to small farmers; (5) a more even cash flow to farmers; (6) improved human nutrition; (7) higher degree of self-sufficiency in basic foods; and (8) increased foreign exchange earning. The model may be changed to accommodate a different set of goals. Implicit in each numbered line is a causal relationship between change in one variable and change in another.

The contribution of new technology to the achievement of development goals depends heavily on existing public policy. Hence, existing policy should be clearly specified, and it may be useful to apply the model to allow for alternative policy measures.

Selected CIAT Activities

The remainder of this chapter discusses some of the recent CIAT efforts aimed at developing and field testing simple methodologies for generating the information discussed above. Although the information obtained from these efforts is expected to be useful for CIAT and the national research agencies in the countries where the empirical testing is carried out, the primary purpose of the work is to develop simple methodologies for use by national research agencies in Latin America.

The CIAT work is discussed under three headings: single commodity analyses; multi-commodity analyses; and a systems engineering methodology for small farms. The discussion is limited to selected illustrative projects. A description of all the CIAT activities in this area is beyond the scope of this chapter.

Single Commodity Analyses

This type of work is relevant when a decision has been made to research a specific commodity either indefinitely or for a certain minimum time period. Although the amount of research resources allocated to a certain commodity

may be gradually increased or decreased over time, the low mobility of research resources may not permit rapid and large changes in the relative emphasis given to research on particular commodities. Hence, the single commodity analysis may be appropriate, at least for the short run.

In the case of a single commodity, information is needed on the commodity itself as well as on its interaction with other commodities in both production and consumption. The current CIAT single commodity data collection and analysis focus on the farm sector.

The single commodity approach attempts to identify the factors associated with low productivity in a specific crop. It then proceeds to (1) identify researchable problems expected to improve productivity and production, (2) estimate the impact of solving each of the problems on productivity and production, (3) estimate the costs, time requirements, and adoption probabilities of research for each problem and each technology, and (4) estimate the impact of alternative research efforts on product supply, input demand, domestic farm consumption, and farm sector income and its distribution on farm size. Such projects are currently under way for maize, cassava, and beans. Basic data are collected from agroeconomic surveys and agrobiological experiments.

Agroeconomic surveys. The agroeconomic survey attempts to transmit to production scientists and research management the farm-level demand for applied agricultural research, through establishing a direct link between the farm and the research agency. The survey describes the production process and focuses on identifying factors which limit production and productivity and on estimating their relative importance. Although highly interrelated, these factors may be classified as primarily agrobiological, socioeconomic, or institutional. Given the purpose of the survey, emphasis is placed on agrobiological and related economic factors.

Most of the data related to the *agrobiological factors* are obtained from direct observation in the farmers' fields. The occurrence and severity of disease, insect damage, and weeds are noted. Furthermore, existing cropping systems, cultural practices, soil quality, availability of water, plant type, and general plant development are described, and yields and yield variance are estimated. The farmer's perception of the agrobiological problems is compared to field observations, and an effort is made to discover his attitudes toward solutions to the problems (new technology). In this endeavor, emphasis is placed on obtaining some indication of the farmer's *objectives* – including the relative importance to the farmer of income, risk, and home consumption – to help identify technology with a high expected rate of adoption.

With respect to *economic factors*, data are sought on (1) the use of pur-

chased inputs such as chemical fertilizers and insecticides, (2) labor use and production costs by production activity, and (3) gross and net revenues obtained from the crop.

The information sought in respect to *institutional factors* focuses on certain aspects of input and product-market relationships as well as on the availability and use of credit and technical assistance.

A small team of agronomists and economists provides the *data collection mechanism*. After having received an intensive training course in diagnosing farm-level production problems, the team visits each of a selected sample of farmers three to four times over the period of a complete crop cycle. Field collection of data on agrobiological issues takes about half the time spent on each farm, while the other half is used to interview the farmer.

Training of the field team is one of the most critical factors in assuring high quality data from the agroeconomic survey. Making a correct diagnosis in the field, for example, in distinguishing among the symptoms of certain diseases or types of insect damage, in most cases requires considerable expertise. Before initiating an agroeconomic survey, the agronomists on the CIAT field teams spend a certain amount of time with a group from each discipline represented on the relevant CIAT commodity team. This instruction is supplemented in some cases with training from professionals from national research and extension agencies. Most of this initial training takes place in the field.

Agrobiological experiments. The agroeconomic survey provides an estimate of the area affected by each of the problems identified. Furthermore, it gives an indication of the yield-depressing effect of a problem. However, it is frequently difficult to estimate, with a great deal of accuracy, the yield impact from survey data. Hence, controlled experiments are carried out to help quantify the impact of the problems on yields.

Results. The work described above is in its preliminary stages, and before the real value of these efforts for research resource allocation can be established more time is needed to terminate the first round of data collection and analysis. At this stage, however, it appears that in planning their future research CIAT agricultural production scientists have found valuable both their participation in project planning and the training and supervision of field agronomists and the information they have gained from the distribution of preliminary project findings.

Multi-Commodity Analysis

As opposed to the analysis described above, the multi-commodity approach assumes that the choice of commodities for research and the relative priority

among those commodities are not determined a priori. Hence, in addition to the data collected for a single commodity, information is needed on the relative contribution to development goals of research on alternative commodities.

In this area, CIAT is currently undertaking a project whose initial objective is to develop and test a methodology to estimate the impact on human nutrition of increasing the production of each of a number of foods. The empirical testing is currently being done for the city of Cali in Colombia. In addition to the issue of the impact on human nutrition, the project provides information on the impact of alternative production expansions on consumer real income by income strata and may at a later stage be extended to include data on the impact of such expansions on farm sector incomes and distribution.[4]

The methodology is based on a simulation model using as basic data a set of price elasticity matrices (one for each of five income strata) as well as current food prices, quantities consumed, and protein and caloric intakes. The model facilitates the estimation of the impact of alternative agricultural research efforts on human nutrition. The model forms a part of the conceptual model shown in Figure 20-3, estimating the coefficients indicated in the figure by the numbers 20, 21, 28, 29, 36, 37, 45, 46, 47, 48, and 53.

A Systems Engineering Methodology for Small Farms

This approach centers on the farmer and his goals and is considered complementary to the commodity-oriented approaches discussed above. It involves the development of models for the small farm; the small farm system is one in which the farm family and others living on the farm assemble individual enterprises into production, consumption, and marketing systems in which biological and physical factors interact with social, political, and economic systems. Such systems engineering models of the small farm help to explain the dynamic behavior of the farm system as a function of its input and output relationship with external systems (the biological, ecological, and institutional environment) and make it possible to identify the agricultural technologies which will be most effective in stimulating changes in the performance of the individual farm systems. In particular, by being centered on the farm as a system, these models will, it is hoped, identify the principal limitations to the generation of well-being, income, and marketable agricultural surpluses in what we earlier called a technology-free specification of the problem, i.e., a specification of the problem independent of possible technologies for its solution. The relationships explored by these efforts correspond to the numbers 8, 25, 26, 27, and 34 in Figure 20-3.

The systems engineering methodology for small farms is currently being applied by the Small Farm Systems Program of CIAT in its collaborative

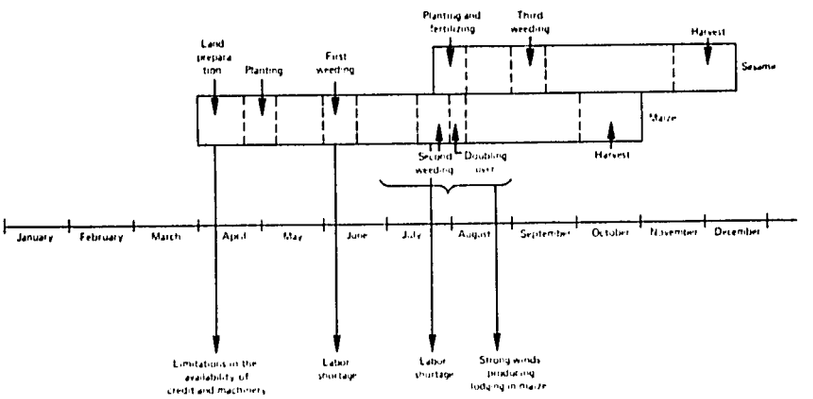

Figure 20-4. Cropping cycle on some farms in southern Guatemala.

work with the Institute of Agricultural Sciences and Technology of Guatemala (ICTA). Before discussing the expected utility of this methodology for research resource allocation, we will describe briefly the overall structure of the models.

The collaborative project is being carried out in an agrarian zone in a southern coastal region of Guatemala. Figure 20-4 shows the principal activities of the agricultural cycle for that zone. A schematic representation of a general model for the small farm system is presented in Figure 20-5, while Figure 20-6 is a reduced version currently being utilized for the study of the farm system in the zone. The behavior of the small farm system is being studied as a function of the principal inputs for the system: credit, prices, availability of machinery and labor, and climate. This is a limited set of input factors, and the principal concern at this time is to understand the behavior of the small farm system when confronted with climatological risk and the interaction of this risk with other inputs.

The farmers in this zone currently utilize almost no modern factors of production, and it is speculated that this situation is due primarily to risk aversion. Delays in the credit system and lack of confidence in the support prices create a situation in which institutional factors do not help to absorb the risk. There are serious delays in the availability of machinery, and a seasonal labor shortage exists owing to competition with the large plantations. The primary purpose of the model is to analyze whether in fact the dynamic interactions of institutional and climatological factors are the principal limitations to production and farm incomes.

The principal function of subsystem Z_1 in Figure 20-6, denominated

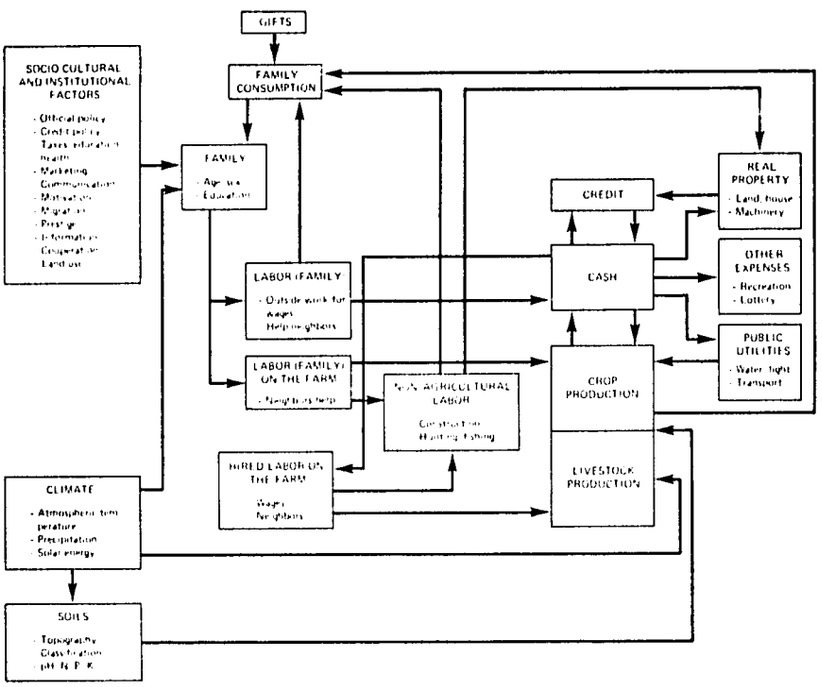

Figure 20-5. Schematic diagram of "a general model" for small farm systems.

"Cash," is to keep account of and allocate the cash flow to the different activities of the family, including the purchase of family consumption goods, factors of production, and payments to credit. It is in this subsystem that the criteria for farmers' decisions are studied.

Subsystem Z_4, "Crop production," is linked to the external inputs of machinery and climate and to the "Cash" and "Soil" subsystems. The evaluation of technological alternatives for production is carried out within this subsystem. The "Family consumption" subsystem represents the need for on-farm consumption of the various products produced on the farm as well as for the purchase of foodstuffs and nonfoods. This subsystem helps to estimate the family nutritional situation.

The technical coefficients used in the model are the best estimates on the behavior of each of the subsystems that have been provided by technical experts. The structure of the model was derived from information gathered through frequent visits to the zone by the members of the CIAT Small Farm

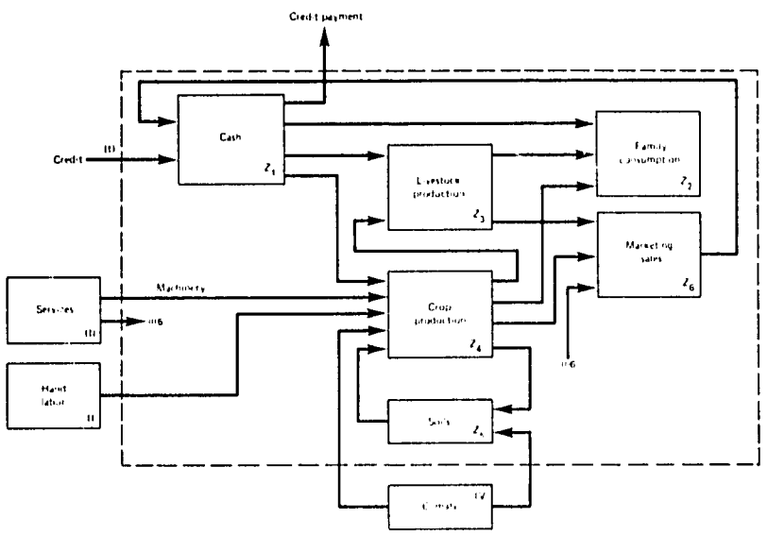

Figure 20-6. Reduced model of a farm system in southern Guatemala.

Systems Program and represents the synthesis of insights available on the behavior of small farms in that zone.

A number of agronomic experiments and a socioeconomic survey are being carried out by the CIAT Small Farm Systems Program to test the technical coefficients available at present and the behavior and predictive ability of the model.

It is not suggested that this model as it now stands represents the total reality of agriculture in the zone. The purpose of developing and utilizing the model is to illustrate some of the principal structural relationships in the physical, biological, and economic environment and to demonstrate the possible utility of such a model.

The model as a research guide. It is expected that this model will be useful in estimating the likely outcomes of alternative research, public policies, and institutional changes. With specific reference to the likely outcomes of alternative extension and research policies, the model evaluates a number of proposed technological packages. These packages are evaluated with regard to their expected impact on family nutrition, family income, risk (as measured by income and production variance), and labor utilization. Preliminary results from this work are shown in Figures 20-7, 20-8, 20-9, and 20-10.

Figures 20-7 and 20-8 present production trajectories generated by the

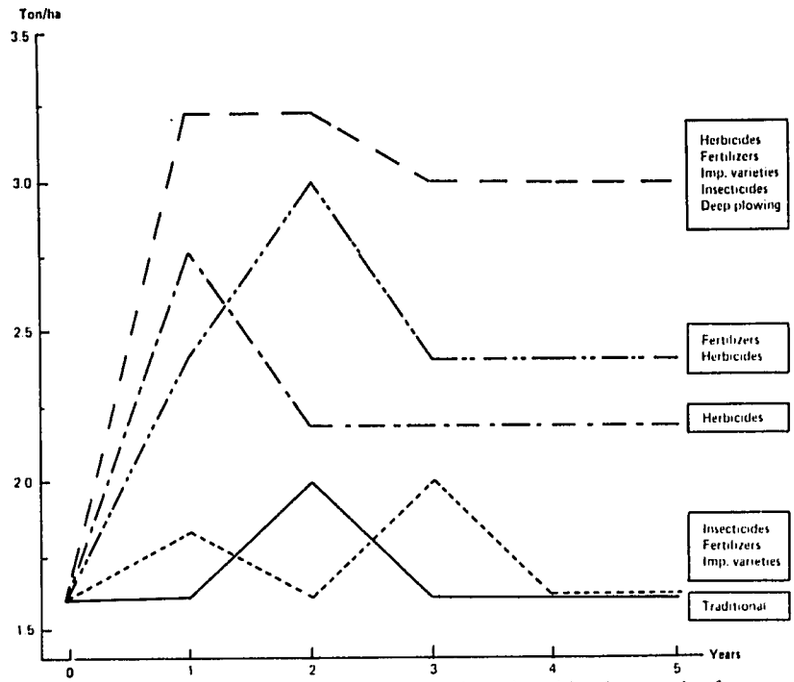

Figure 20-7. Simulated maize production trajectories with prices varying from U.S. $70 to U.S. $120 per metric ton.

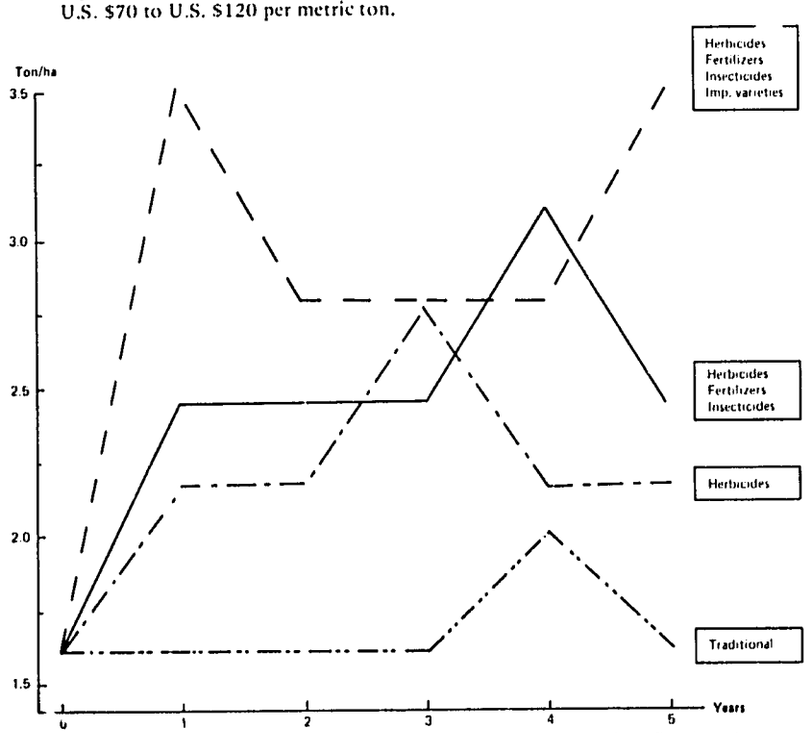

Figure 20-8. Simulated maize production trajectories with prices fixed at U.S. $120 per metric ton.

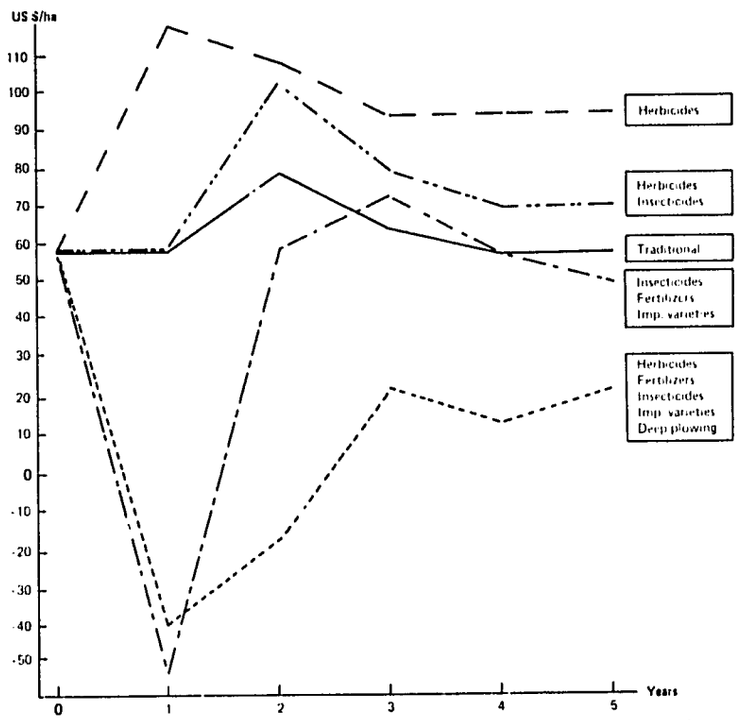

Figure 20-9. Simulated annual net income from maize production with prices varying from U.S. $70 to U.S. $120 per metric ton.

model over a simulated five-year period. Each production trajectory is identified with the production package which was simulated. Figure 20-7 presents production under the assumption that prices fluctuate between $70 and $120 per metric ton throughout the year, as is now the case in the zone. Figure 20-8 presents the production trajectories under support price. Comparison of the graphs indicates that price stability can be a means by which the adoption of technological packages is stimulated.

Figures 20-9 and 20-10 present the net family income trajectories for some of these technological packages under the two sets of price assumptions. Figure 20-9 is illustrative of the risk that is involved under a situation of unstable prices and unstable weather conditions. In particular, two of the so-called "production packages" are so costly that when risks are taken into consideration they would generate negative net income for at least one year. Traditional, or subsistence, farmers cannot tolerate this kind of risk. Another salient

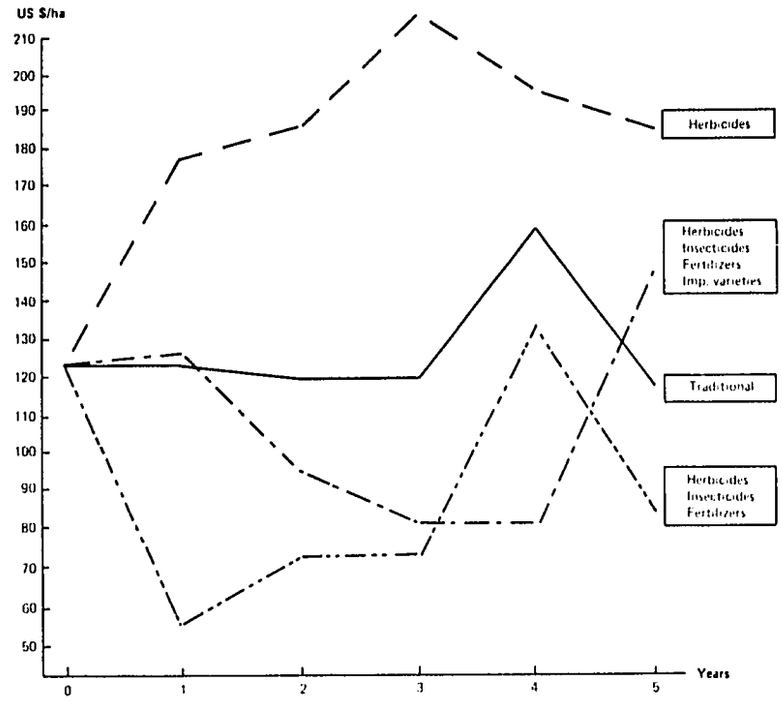

Figure 20-10. Simulated annual net income from maize production with prices fixed at U.S. $120 per metric ton.

feature of the four graphs is that the traditional production package, which utilizes few modern factors of production, produces the lowest yields but tends to be better for net income than some of the more complicated production packages. The traditional system has the lowest income variance. A comparison of Figures 20-9 and 20-10 would illustrate the potential value of an effectively functioning market and price support system.

It appears that the package expected to make the largest contribution to the income goal is that referring to the use of herbicides. Before this finding, ICTA did not have any work planned on weed control for that zone. However, as a result of the finding, a professional has now been sent for training in weed control, and the collaborative CIAT-ICTA work for the coming agricultural season will involve extensive research on weed control methods and the economic evaluation of different weed control techniques.

In addition to this immediate though preliminary outcome of the model, it is expected that sensitivity analysis will reveal its further utility in decision-

making on research resource allocation. This analysis will involve the estimation of the response of the system to variation in the parameters and coefficient. The experimental work will be focused on measuring with precision those technical coefficients which appear to be sensitive to variation. If, for example, the model were to indicate sensitivity for insect damage, intensive research on insect control would be recommended. On the other hand, if the model is not sensitive to variation in these technical coefficients, such research would have a lower priority. Thus the model can be utilized to establish research priorities both in the farmer's field and at the experiment station.

The above-mentioned systems simulation efforts are expected to be utilized for the agroeconomic survey results to achieve some of the analyses suggested by the conceptual model presented in this chapter.

NOTES

1. Acknowledgment is due to John Fitzsimons for his valuable suggestions on this chapter.

2. A discussion of the systems approach in general may be found in a number of books including Stanford L. Opener, ed., *Systems Analysis* (Middlesex, England: Penguin Modern Management Readings, 1973); C. W. Churchman, R. L. Ackoff, and E. L. Arnoff, *Introduction to Operations Research* (New York: Wiley, 1957); A. W. Wymore, *Systems Engineering Methodology for Interdisciplinary Teams* (New York: Wiley, in press); Preston C. Hammer, ed., *Advances in Mathematical Systems Theory* (University Park: Pennsylvania State University Press, 1969). The usefulness of this approach for research resource allocation is discussed in John L. Dillon, "The Economics of Systems Research," paper presented at the Agricultural Systems Research Conference, Massey University, Australia, November 20-22, 1973.

3. A more complete discussion of data requirements may be found in Per Pinstrup-Andersen, "Toward a Workable Management Tool for Resource Allocation in Applied Agricultural Research in Developing Countries," revised version of paper presented at the Ford Foundation meeting for Program Advisors in Agriculture, Ibadan, Nigeria, April 29-May 4, 1974.

4. The results of this research are reported by Per Pinstrup-Andersen et al. in "The Impact of Increasing Food Supply on Human Nutrition: Implications for Commodity Priorities in Agricultural Research and Policy," *American Journal of Agricultural Economics*, 58 (May 1976), 131-142.

21

Models and Methods Used to Allocate Resources in Agricultural Research: A Critical Review[1]

C. Richard Shumway

Introduction

The objectives of this chapter are to describe systems of resource allocation now being used by United States public agricultural research organizations, either routinely or experimentally, and to suggest other procedures potentially useful to the administrator in ranking research proposals and allocating resources to them.

Current Decision Process

The greater part of agricultural research conducted in the United States is performed by public organizations, primarily the USDA and the various state agricultural experiment stations. While the decision process for allocating resources among research efforts varies considerably between organizations, the following approach is reasonably typical.[2] The management system consists of the administrator, department heads, and professional scientists. In the project funding process the administrator judges project outlines submitted to him by department heads, who have previously analyzed proposals prepared by a larger number of scientists, most of whom are tenured or career staff. Decisions about individual projects are made largely on a year-to-year basis by each scientist acting as an entrepreneur on behalf of his own professional life; if he chooses projects that are not rewarding to the funders, to

other scientists, and to the administration, he suffers. A great weight is placed on him for selecting the appropriate projects. The decision function involves not the selection and funding of specific projects so much as the employment of specific scientists who will be attached to the research organization for a considerable period. Emphasis is on maximum freedom for the scientist to select projects and undertake desired research with minimum control or direction from administrators. Furthermore, if experiment station administrators are not willing to support specific research, the scientist there is normally free to seek grant funds from outside sources.

Why Modified Decision Processes Are of Interest

Soon after World War II, as public investment in research began a two-decade period of rapid growth, investigations of alternative approaches to the management of research were reported for the first time. The stimulus for such work appears to have come primarily from corporate managers concerned with the rate of return from investments in research as opposed to other activities and from government funders anxious to prevent waste from the rapidly growing budget. Since the availability of scientists was lagging behind, it was a seller's market. Researchers had little difficulty securing funds for interesting problems.

Things are now different, however. The cycle appears to have peaked and the supply-demand relationship has changed. Federal research and development expenditures are leveling off; substantial decreases have occurred in several areas, including atomic energy and space.[3] Nonfederal expenditures have continued to rise, but not fast enough to offset even the effects of inflation.[4] With greater competition among scientists for available funds, internal pressures for more intensive investigation of management processes have surfaced.

Attention is focusing more directly on the research administrator, an important link between funding sources and scientists. It is he who must account for current expenditures of funds while assuring significant achievements over time from a highly uncertain production process; he must allocate support funds even though he cannot program breakthroughs; he must keep scientists' morale high and give them sufficient latitude to perform at their best at the same time they are competing more strenuously for limited resources. He can solve the increased competition problem simply by allocating support funds evenly among all researchers or in proportion to salary. He can also reduce the size of his research staff through attrition and/or termination of untenured or noncareer scientists. Or, he or his designates can evaluate the merits of individual research proposals and specify which will be funded and for how much.

Of pertinence to this last alternative, an impressive array of management techniques have been generated in the last few years, the objectives of which are to help the administrator to be internally consistent and/or to increase his likelihood of receiving essential information to form a valid judgment. Some of these structured methods are technically referred to as "decision models." However, virtually all that are applied to problems of ranking and resource allocation in research are more appropriately classified as "information systems." They are mechanisms or logics for generating information for the decision-maker(s) rather than for automatically effecting decisions.

Examples of Structured Information Systems in Agricultural Research

Several new concepts in the management of agricultural research resources have recently been implemented or experimented with in the USDA and at state experiment stations. Some have already been well publicized, e.g., USDA's Planning, Programming, and Budgeting System (PPBS), Iowa's Review Panel System, California's Academic-Responsive Budgeting System, and Minnesota's Resource Allocation Information System.[5] Florida's system for establishing accountability in resource allocation in agricultural research was discussed in a paper presented at the American Agricultural Economics Association meeting.[6] Therefore, attention will be given here to two recent applications of structured methods. One organization is a component of the USDA Agricultural Research Service; the other is a state agricultural experiment station. A similar numerical approach (i.e., scoring models) was applied by both organizations to develop a rank order of research activities.

Agricultural Research Service Resource Allocation Experiment in Livestock Research[7]

Before fiscal year 1972, the deputy administrator of the Agricultural Research Service (ARS) in charge of livestock research initiated a comprehensive evaluation of all research activities under his jurisdiction. Approximately $1 million was withheld from initial allocations to permit expansion of research efforts in those areas judged to be of highest priority.

The research program was divided into two echelons of effort – projects and program activities (aggregates of research projects). Research projects were further subdivided into two groups – ongoing projects and proposed new starts.

Three panels evaluated research efforts of each type – program activities, ongoing projects, and proposed new starts. Panel A, consisting of eight members (assistant division directors, branch chiefs, and one laboratory director),

evaluated animal science research efforts. Panel B, consisting of seven members (assistant division directors and the directors of the three largest laboratories), evaluated veterinary science research efforts. Panel C, consisting of five members (the deputy administrator, two division directors, the planning, programming, and review officer and his staff assistant) evaluated research efforts in both areas. Members of the first two panels considered only those research efforts that related to their respective organization's programs plus other selected efforts. Members of the third panel evaluated everything

A scoring model was used by each panel to evaluate research efforts. The scoring model is a ranking approach that formally incorporates the decision-maker's subjective trade-offs and decision criteria into the model framework. A primary assumption is that a few criteria can be established which, when properly related, will specify the desirability of a decision alternative. The set can consist of both quantitative and qualitative criteria so long as each is independent of the others. A discrete scale is developed for each criterion with sufficient range to include all efforts being evaluated and with only enough categories to discriminate between those that differ significantly relative to the criterion. An overall score is calculated for the effort by summing the product of criteria weights and scores over all criteria.

Different criteria were considered in evaluating different types of research effort. For example, five criteria were used to evaluate research activities, six for ongoing projects, and eight for proposed new starts (see Table 21-1). Criteria weights were specified by members of Panel C, including the deputy administrator and the planning, programming, and review officer. Panelists then evaluated research efforts with respect to each criterion by distributing efforts evenly across a five-point discrete scale. An average score for each effort was obtained by giving equal weight to each of the three panels and equal weight to each member of an individual panel.

Considerable information on each research effort was available to all panel members. For the research activities, information included identification of the current state of the art, technological objective, promising research approaches, consequences of attaining the technological objective, magnitude of potential benefits, probability of success, and research resources required over a ten-year period. For ongoing research projects, information included the location of work, research activity contributed to, major achievements, publications, and research resources used in the previous year, redirection, objectives, plan of work, and resources required for the next year, initiation date of work related to the project, and planned duration. For proposed new starts, information included location of proposed work, research activity contributed to, ongoing project related to, justification for the proposal, objectives,

Table 21-1. Criteria for Evaluating Livestock Research in the Agricultural Research Service (ARS)

Evaluation Level	Criteria	Criteria Weights
A. Research activities	1. Benefit/cost ratio	40
	2. Extent to which research meets national, ARS, livestock research, and division goals	15
	3. Contribution to knowledge	15
	4. Urgency	15
	5. Inadequate research results are expected elsewhere	15
	Total	100
B. Ongoing projects	1. Priority of corresponding research activity	20
	2. Importance of corresponding specific research activity goal(s) identified as being contributed to by this project	20
	3. Past achievement (last fiscal year) relative to cost	15
	4. Goals set for the next fiscal year are specific, realistic, and worth achieving	15
	5. Urgency	15
	6. Cost relevance for this project	15
	Total	100
C. Proposed new starts	1. Priority of corresponding research activity	15
	2. Importance of corresponding specific research activity goal identified as being contributed to if this proposal is funded	20
	3. Priority of ongoing project to which this proposal relates	15
	4. Goals set for the next fiscal year are specific, realistic, and worth achieving	10
	5. Urgency	10
	6. Cost relevance for this proposal	10
	7. Adequacy of plan of work	10
	8. Suitability of location	10
	Total	100

specific goals for the next fiscal year, plan of work, expected duration, resources required, and impact of this proposal on other projects.

From this evaluation, all 98 research activities, 210 ongoing projects, and 134 proposed new starts were rank ordered. The results were provided to the deputy administrator for his guidance in allocating funds initially held in reserve. Results were also disseminated to all livestock research managers and to scientists at their discretion. Because the nature of the scoring model necessitated the evaluation of specific aspects of each research effort, information was available to division directors, branch chiefs, and scientists concerning

Table 21-2. Livestock Research Activities Ranking in Top 15 Percent in ARS Experiment

Rank	Research Activity
1	Beef cattle reproduction
2	Diagnosis of foreign animal diseases
3	Foot and mouth disease
4	Swine reproduction
5	Dairy cattle selection and breeding
6	Pork quality
7	Dairy cattle reproduction
7	Beef quality
9	Beef cattle feed efficiency
10	Calf scours and enteric diseases
11	African swine fever
11	Animal waste research
13	Pesticide residues
14	Dairy cattle feed efficiency

areas in which specific efforts were judged by their superiors to be deficient. The results of this exercise were not used to terminate all low-ranking research efforts. However, they did provide an informational base from which some resources were reallocated from low-ranking to high-ranking efforts. Research activities ranking in the upper 15 percent include those listed in Table 21-2.

North Carolina Experiment on Research Priorities[8]

Public concern about increasing costs and complexity of agricultural and related research, coupled with leveling off of research support and stronger demands for accountability, led to a general evaluation of agricultural research priorities and of research resource allocation at the North Carolina Agricultural Experiment Station beginning in 1972. The immediate goal of this examination was to determine which research problem areas (RPAs) should be given greater emphasis at the station in the next five years.

A joint administration-faculty effort was mounted to conduct an exhaustive review of all research programs and projects at the station and to explore possible redirections for the future. All members of the research faculty and much of the extension faculty participated in the study. Outside scientists evaluated faculty task force recommendations. Recommendations included funding and scientist reallocations and additions at the RPA and sub-RPA level. Narrative support for such changes was further evaluated by numerical assessments of the recommendations based on a small number of important criteria. A set of scoring models was applied in this part of the evaluation.

Twenty task forces, each composed of five to ten research and extension

faculty members and occasional representatives of state agencies, reviewed the entire research program of the station. One task force was appointed for biological sciences and technology, five for animal research, six for plant research, three for environmental and natural resources research, and five for food-fiber-people-economics research. Each one was responsible for evaluating a portion of the total program, generally crossing departmental lines. They recommended quantitative changes in resource use (both money and scientists) as well as timing for such changes, and they rated each recommendation according to prespecified criteria.

Following submission of the task force reports, eighteen extramural panels, each consisting of three scientists not associated with North Carolina State University and chaired by a representative of the Cooperative State Research Service, evaluated the task force recommendations. They rated those recommendations, using the same criteria considered by the task force, and also made independent recommendations for resource allocation.

To this point the evaluations were interdisciplinary in nature. The twenty-three academic departments then reacted to the task force recommendations and extramural panel reviews in a disciplinary context, developed a third set of five-year recommendations, and rated the task force recommendations.

The scoring models were developed beginning with the list of evaluation criteria used in the National Program of Research for Agriculture.[9] The station administration consolidated and restructured them to improve apparent independence and relevance. These proposed criteria varied between the four major research areas. They were submitted through the mail to members of the Research Planning Advisory Committee, composed of department heads, first for revision of the criteria sets and then for specification of importance weights. Revisions, weightings, and explanations of reasons for them were developed by each member of the committee, summarized by the administration, and resubmitted to the committee members using an interactive Delphi procedure.[10] This approach was repeated twice to permit modification of initial opinions based on the convincing anonymous arguments of others. The four criteria sets, with the approximate wording developed by the committee, are listed in Table 21-3 together with their average weights from the final Delphi round. To permit comparison across major research areas, the criteria weights for each area were standardized by the committee to sum to 100.

Without knowledge of the weight attached to each criterion, each member of the three groups – task forces, extramural review panels, and department heads – independently scored task force recommendations for increased RPA resources on a five-point scale. Some participants rated most RPAs in the upper two scoring intervals while others dispersed them more evenly among all intervals. Since each person did not score all RPAs, it was possible that those RPAs scored by the former rated higher than those scored by the latter only

Table 21-3. Criteria for Evaluating Research Problem Areas at the North Carolina Agricultural Experiment Station

Research Area	Criteria	Criteria Weights
A. Biological sciences and technology	1. Urgency – basic information needed to aid in solution to threat or problem.	20
	2. Cost relevance – expected long-term benefits in relation to costs.	15
	3. Degree to which similar research is not now being conducted or not likely to be conducted elsewhere (higher scores if inadequate research results expected elsewhere).	15
	4. General importance and potential for contribution to knowledge. Higher scores to be assigned for greater scientific merit and potential for contribution to faculty development and improved academic performance.	50
	Total	100
B. Animals and plants	1. Extent to which proposed research is consistent with station, regional, and national goals in agriculture and forestry. Consider economic value of the crop or animal enterprise and its products to people of North Carolina.	35
	2. Cost relevance – expected benefits in relation to costs.	20
	3. Extent to which similar research of adequate quality is not being conducted on this commodity elsewhere (higher score for RPAs and sub-RPAs for which adequate results are not likely to be available elsewhere), and degree of urgency of need for research results.	20
	4. Potential for contribution to knowledge.	25
	Total	100
C. Environment and natural resources	1. Extent to which proposed research is consistent with station, regional, and national goals in natural resource development and conservation.	35
	2. Cost relevance – expected benefits in relation to costs.	15
	3. Extent to which similar research of adequate quality on this resource is not being conducted elsewhere (higher scores for inadequate research elsewhere) and whether or not there is (1) a threat to natural resource, (2) public pressure, or (3) a critical need for environmental protection.	15
	4. Potential for contribution to knowledge.	20
	5. Extent to which the research will aid in meeting broader public service commitment of the school and university, beyond traditional statutory charge of the experiment station.	15
	Total	100
D. Food-fiber-people-economics	1. Extent to which recommended research is consistent with station, regional, and national goals of promoting and protecting public health and improving family living; potential for improving quality of life and developing rural communities in North Carolina.	35
	2. Cost relevance – expected benefits in relation to increased costs of research in these areas, resulting from these recommendations.	20
	3. Extent to which similar research of adequate quality is not being conducted elsewhere (higher scores for inadequate research elsewhere) and whether there is (1) public support for research to evaluate the impact of improved agricultural technology, (2) a threat to public health, or (3) a need for information to support new processing industries.	20
	4. Potential for contribution to knowledge.	25
	Total	100

because of personal differences in using the subjective model. While there are also legitimate reasons for different average scores between participants, no objective procedures were available to make such interpersonal judgments. Therefore, to permit comparison across participants, each person's scores were given equal weight by adjusting proportionally so that the *average* overall score for all RPA resource increases evaluated by any individual was the same.

Recommendations for resource increases in ninety RPAs were evaluated with the scoring models. Project rankings were obtained from the adjusted scores according to two standards: average score by all raters and average score minus one standard deviation of all raters. Although this latter standard forces the rank to respond to some extent to the degree of variability among participant scores, it is of course arbitrary. The standard deviation is computed based on the assumption of a normal distribution. For the normal distribution, approximately 83 percent of observations lie above the *mean minus one standard deviation*. If the observations are skewed to the right, more than 83 percent of them would lie above this point; if skewed to the left, less than 83 percent would. For other distributions the percentage may also be different.

The second standard caused RPAs for which there was much sampling variability, difference of opinion, and /or variability in the basic predictability of the area to be ranked lower than when ordered according to the first standard. RPAs with little difference ranked higher in the second list. Ten RPAs that ranked in the top 15 percent on both lists are as follows (not in order of rank):

Appraisal of soil resources
Control of diseases, parasites, and nematodes affecting forests
Control of diseases of livestock, poultry, and other animals
Genetics and breeding of forest trees
Improvement of biological efficiency of field crops
Improvement of biological efficiency in production of livestock, poultry, and other animals
New and improved forest products
Improvement of economic potential of rural people
Improved income opportunities in rural communities
Improvement of rural community institutions and services

As expected, there was considerable difference of opinion between raters and between groups of raters. Between groups, the rank order correlation between the department heads' scores and the extramural panels' scores was highest at only .45. The correlation between the task forces and extramural panels was comparable at .42 while the correlation between the task forces and department heads was .24. Furthermore, an analysis of variance suggested

that the variation of scores between groups was not significantly different from the variation between raters of the same group. There was no evidence that the three groups came from different populations of opinion holders, only that the population was extremely diverse. The coefficient of variation of scores for individual RPAs was frequently in excess of 20 percent.

Alternative Methods

The first part of this chapter has described a currently typical resource allocation decision process and has presented a pair of case studies in the experimental application of a more structured mechanism. Attention will now turn to a review of various other methods reported in the research management, utility theory, and behavioral science literatures that could help the research administrator to be internally consistent when ranking research efforts and allocating resources to them. They do not assist directly in formulating the "correct" judgment about a particular effort, although some stimulate opinion changes through additional information. These techniques vary widely in the amount of time required to implement them, processing costs incurred, and information generated. Important questions selectively addressed in this section include: (1) How quickly can judgments be obtained using the technique? (2) What processing costs are incurred? (3) How many opinions are listened to? (4) How does the technique affect the risk of a bad decision? (5) What types of information can be obtained from the process (i.e., ordinal or cardinal ranking of projects, benefit/cost ranking, recommended allocation, summaries of specified characteristics)? (6) How does the process handle funding options, multiple constraints, and uncertainties? (7) With how many techniques is it compatible? (8) How have users judged the value of its products?

Project Ranking

Methods of ranking projects using both single and multidimensional measures of project benefit will be introduced first.

One-dimensional ranking methods. Several techniques, including Q-sort, paired comparisons, successive ratings, and successive comparisons, are included in the category of *individual participant comparative methods.*[11] In each of these techniques a single judge compares the overall subjective worth of one item with another or with a group of items. When only a few items must be evaluated, methods in this group are among the simplest procedures for systematic comparison. An implicit assumption is that each item is independent and mutually exclusive of all others.

With Q-sort, projects are divided into hierarchical categories on the basis

of their expected benefits, or on any other standard basis. Typically, essential information about a project is written on a card and the cards are then sorted into piles. No quantitative values are assigned to any category, but each may be divided into additional categories until no significant differences in anticipated benefits are discernible among its projects.

With paired comparisons, a complete ordering of projects is obtained and verified. All possible pairs are examined, and the project within each that has the higher expected benefit is identified. Again, no quantitative value is assigned to any project—only an ordinal ranking. After projects are ordinally ranked, successive ratings and/or successive comparisons can be applied to establish and verify a relative cardinal ranking. Benefit-cost ratios can be computed from these rankings and used as a rational method of allocation if the funding decision is strictly of the "go/no go" type.

With successive ratings, an arbitrary base number is assigned to the highest ranked project. Numbers are given to each subsequent project in accordance with its anticipated benefits relative to the top one. These values are verified by covering them and repeating the comparison relative to the lowest ranked project. If significant differences appear in the two sets of numbers, the procedure is repeated until consistent ratings are obtained when the scale is anchored to both the highest and the lowest benefit projects.

With successive comparisons, initially assigned values are refined by comparing the value of one high benefit project with portfolios of lower benefit ones. The number of projects in the portfolio is successively reduced until the single high benefit project is preferred to the portfolio. The logic of this method is structured to establish bounds on the cardinal ranks of all projects and to identify inconsistencies in earlier assigned values.

A final comparative approach, dollar metric, permits the calculation of absolute benefit-cost ratios.[12] Paired comparison are used first to identify the preferred project from each possible pair. From an estimate of the expected cost of each project, the participant specifies how much the cost of the preferred project could increase before the other would be chosen. He repeats this procedure for all pairs. Next, he determines how much the cost of the least preferred project could increase (or decrease) before he would be indifferent toward the choice between funding the project or not having a project in this research area. This base figure permits the specification of anticipated benefit in dollar terms. By identifying actual expected cost, he can calculate a benefit-cost ratio with the numerator and denominator in the same units.

Features of the comparative ranking methods are summarized in Table 21-4. Also included are two rankings of the methods by ease of use and user satisfaction with the product of the method. Rankings of the methods are based upon the reactions of middle managers who used four of them during

Table 21-4. Comparative Ranking Methods

Category of Comparison	Q-sort	Paired Comparisons	Successive Ratings	Successive Comparisons	Dollar Metric
Type of rank obtained	Categories	Ordinal	Cardinal – relative scale	Cardinal – relative scale	Cardinal – absolute scale
Potential uses in research evaluation	Grouping of projects, program areas, criteria, or objectives	Ranking of projects, program areas, criteria, or objectives	Ranking of projects, program areas, criteria, or objectives	Ranking of projects, program areas, criteria, or objectives	Ranking of projects, program areas, criteria, or objectives
Ranking methods it can be used with	All	Q-sort, dollar metric, group and multidimensional methods	Q-sort, paired comparisons, successive comparisons, group and multidimensional methods	Successive ratings, group and multidimensional methods	Q-sort, paired comparisons, group and multidimensional methods
User satisfaction with ranking	4	3	2	1	n.a.[a]
Ease of use	1	2	3	4	n.a.

Note: Ordering of methods is based upon my experience in working with twenty middle managers who applied the methods in a large governmental research and development organization. 1 = highest ranked method (most satisfaction or easiest).

[a] Not applied.

a workshop on benefit measurement. Those methods which were easier, faster, and more natural to use also resulted in project rankings which were less useful and/or less satisfactory to the person applying them. Several expressed most satisfaction with the ranking generated by using successive comparisons. However, each concluded that the thought process of comparing one project with portfolios was unnatural and preferred successive ratings even with a slightly less satisfactory ranking.

Even after the individual's subjective rankings are elicited, the problem remains concerning which person(s) to listen to and how to process multiple opinions. Using *group-determined measures of benefit* opens up a number of options. The decision-maker can identify one "best" judge and listen exclusively to him. Alternatively, to increase the likelihood of obtaining a more nearly "correct" opinion, he can identify several experts and accept a simple or weighted average of their opinions as the best estimate. Following this course also permits the degree of variance among their opinions to be determined; this is an important by-product. A third course permits interaction be-

tween participants. However, when that occurs, independence of opinion is partially muted, and the ability to use statistical measures of variance is restricted. There are several forms of group interaction.

In the first approach, called "committee or round table," the group meets together, airs differences of opinion, and concludes with a "group opinion." Minority opinions may also be expressed.

In the second, or "chain-of-command" approach, interaction takes place between adjacent links. If a superior disagrees with a subordinate's opinion, the subordinate's view may be totally suppressed in the next step when the superior interacts with his superior. Most typically, only a single opinion exits from the highest link in the chain, and that is often formed through interaction with one other person. That individual in turn presented only one opinion although a wide variety may have surfaced in the interaction that preceded it. The Iowa Agricultural Experiment Station is using a variant of this approach, in which panels are included as three links in the chain to evaluate five-year research alternatives.[13]

A third approach, "Delphi," is a formalized method designed to promote consensus without obscuring variants.[14] (See also earlier reference to the use of Delphi in the North Carolina experiment.) It consists of a series of individual interrogations to a group of experts, interspersed with information and opinion feedback. Some questions inquire into the reasons for previously expressed opinions. A collection of such reasons is then presented to each respondent, who is invited to reconsider his earlier estimate. Delphi attempts to improve the committee approach by subjecting views of individual experts to each other's criticism in ways that avoid face-to-face confrontation. It provides anonymity of opinions and of arguments advanced in their defense.

Each of the group methods can be used to obtain ordinal or cardinal rankings of projects, program areas, criteria, or research objectives. They can be used singly or in conjunction with comparative and/or multidimensional methods. However, while several of the comparative methods make a logical system when used in succession, few of the group methods do. I have ranked the methods relative to three criteria (see Table 21-5). Like the comparative methods, none is consistently high or low with respect to all criteria. The one which requires the least time from all judges combined also permits the fastest rendering of a final decision because only one person need be involved, but it results in the highest risk of a "bad" judgment being made. In addition, measures of variant opinions are normally restricted to the group average and Delphi methods. And, although opinion variation can be calculated at each round of Delphi, a statistical measure of variance satisfies the independency of observation requirement only in the first round.

Table 21-5. Group Ranking Methods[a]

Evaluation Category	"Best" Judge	Group Average	Committee	Chain of Command	Delphi
Other ranking methods with which each group method can be used	Comparative and multidimensional	Comparative and multidimensional	Comparative and multidimensional	Committee, comparative, and multidimensional	Comparative and multidimensional
Theoretical risk of "bad judgment"	5	3	2	4	1
Total time required of all judges	1	2	3	2	3
Speed of obtaining judgment	1	3	4	2	5
Estimate of variance among judges possible?	no	yes	not usually	not usually	yes
Special problem areas	How to identify "best" judge		Most respected or persuasive member's opinion likely to carry excessive weight	Subordinate opinions are subdued in subsequent interactions	

Note: Evaluation of methods is by the author. The highest ranking is 1, indicating least risk, least time requirement, and fastest judgment.

[a] All methods are flexible as to type of rank obtained—category, ordinal, and/or cardinal type of rank. The potential uses in research evaluation of all these methods include ranking of projects, program areas, criteria, and/or objectives.

Multidimensional ranking methods. The basic objective of *information systems* is to provide important information to the administrator in a form that will assist him in choosing among decision options. No attempt is made to place projects in overall rank order, but measurements for each dimension of benefit are listed. Several information systems have been designed for research project evaluation, including the one developed by Fishel for the Minnesota Agricultural Experiment Station.[15]

The *benefit contribution models* approach is similar to the scoring models illustrated earlier in that several factors are specified which can be used to judge the expected merits of a decision alternative. However, instead of specifying general evaluation criteria, overall goals of the organization are divided into independent, mutually exclusive objectives. The relative importance of

Table 21-6. Comparison of Multidimensional Ranking Methods

Category of Comparison	Minnesota Information System	Scoring Model	Benefit Contribution Model
Type of rank obtained	Partial cardinal orderings	Overall cardinal orderings	Overall cardinal orderings
Potential uses in research evaluation	Quantitative attribute display of projects	Ranking of projects, program areas and/or objectives	Ranking and funding of projects and/or program areas
Other ranking methods each multidimensional method can be used with	Comparative and/or group	Comparative and/or group	Comparative and/or group
Special properties		Diagnostic capacity for identification of project's weakest area(s)	Ranking may be conditional upon assumed funding pattern

such objectives and the contribution of a project to each of them are estimated. Total benefit of a project may be computed by product summation.

Considerable flexibility for evaluating project interrelationships is permitted. For example, the structural relationship between projects and objectives may be defined such that the contribution of one project is considered to be a function of which other projects are funded. In this case it is not possible to obtain a simple ordering of benefits or benefit-cost ratios without specifying the funding level of interrelated projects.[16]

A summary comparison of three multidimensional ranking methods, including scoring models, is contained in Table 21-6. Scoring models have been used more than the others for ranking research projects. However, partial-ordering information systems analogous to the Minnesota Experiment Station system have also been used in an informal way.

These multidimensional methods are compatible for use in combination with comparative and group methods; however, the combinations vary. For example, partial orderings provided by an information system may be used as input data for obtaining an overall ordering utilizing the comparative and/or group methods. However, with scoring and benefit contribution models, other methods are used to weight the scoring criteria or research objectives, and the overall ranking is determined by the multidimensional model.

Approaches for Optimizing Resource Allocation

Benefit-cost analysis. Benefit-cost ratios are frequently used as a basis for maximizing expected benefit from a given investment. To use these ratios exclusively, there must be only one constraint on resources (e.g., total research

budget for one period) and only one positive funding option for each project. The decision consists merely of funding the highest ranked projects until funds are exhausted. Problems may arise because of project indivisibilities (i.e., when there is money left but not enough to fund the project next in order), but a satisfactory solution can generally be obtained by a manual check of nearby alternatives. However, when there are multiple constraints, time periods, and/or project funding options, simply allocating funds based upon magnitude of the benefit-cost ratio is not so appealing.

Optimization models specifically for research. A number of specific optimization models have been developed for resource allocation in research and development when one or more of the complicating factors exist. Some have been designed for research evaluation, but many are appropriate only for development projects. Each purports to analyze quantified subjective data in a prespecified manner and to suggest the most appropriate allocation of available resources, given the model assumptions. They vary greatly in scope and procedure. Virtually all focus on the allocation of funds, and some address the issues of manpower and facility allocation as well. Some are deterministic models; others incorporate stochastic elements. Most are static; a few are dynamic. Some focus only on economic evaluations; others are not restricted in the type of variable they can consider. A few attempt to derive the optimal research budget, but most treat the research budget as an upper restraint on the decision problem.[17] No allocation model developed specifically for agricultural research allocation has been reported, although two partially developed models have been presented. The algebra for an agricultural experiment station allocation model has been discussed by Paulson and Kaldor.[18] However, the specific structure of the model and the method of solution were not defined. The mathematical structure for a fund and manpower allocation problem in a university department has been identified by Cartwright.[19] The complexity of the problem resulted in its being left in conceptual form.

Since a large number of models have been described in the references above, this discussion will focus on two recent models representing different approaches to the allocation problem. Both include operational computerized models for allocating money to research projects. The first was developed for and has reportedly been implemented by an industrial research organization. The second model was developed for a defense research and development organization and is now being used there experimentally. Both are being used primarily for *applied* research evaluation.

Atkinson and Bobis, authors of the *simulation model*, seek to attain maximum expected profit through optimal allocation of a fixed five-year research budget among projects and over time.[20] The approach is dynamic in that it

solves the problem of distributing the funds among the five years. It incorporates stochastic elements, measures costs and benefits in economic units only, and utilizes a simulation procedure to obtain solutions. Expected economic value of a research product is computed as a function of the year the project is completed and the probability of technical, legal, engineering, and commercial success. Year of completion is a stochastic function of project funding in that and each previous year. The selection of projects, optimal rate of funding, and annual allocation of the total research budget are determined through an iterative procedure using only point estimates of potential payoff. The point estimates are subsequently replaced with distributions and randomly sampled by simulation to estimate the range in payoff possible from the selected strategy.

The *network model*, by Baker et al., is both static and deterministic, but it incorporates noneconomic as well as economic variables and permits direct interaction between decision-maker and computer.[21] An optimal allocation of a single-period research budget is sought through the use of a network program. Separable programming can also be used. A piecewise-linear benefit function approximates the nonlinear function. It is maximized subject to a set of budgetary constraints. The benefit function is completely flexible in the type and form of variable it can consider. The constraint set includes an upper limit on total budget and upper and lower constraints on the funding of individual projects, program areas, technologies, and performing organizations. Interactive opportunities are built into the program to permit the participant to conduct sensitivity analyses by varying data inputs which are least certain and by asking "what if" types of questions.

The simulation and network models represent different philosophical and mathematical approaches to allocation. Being designed for an industrial laboratory where economic profit is the motivating force, the simulation model is comprehensive in the types of market decision variables incorporated. Both stochastic variables and dynamic allocation decisions are considered. The network model was prepared for a government research and development organization where nonmarket goals are at least as important as economic ones. The budgeting process earmarks some funds for specific types of research; therefore, multiple constraints must be considered. The model is static and the variables deterministic although stochastic elements can be evaluated through interaction.

In another respect both models represent a similar view of resource allocation among research efforts. A project can be expanded or reduced in scope, and progress can be speeded up or slowed down depending upon the resources allocated to it. Significant uncertainties exist about cost and potential payoff from any given effort. Both models view the allocation problem as a complex

Table 21-7. Comparison of Resource Allocation Optimization Methods

Category of Comparison	Benefit-Cost Analysis	Atkinson-Bobis Simulation Model	Baker et al. Network Model
Variables in benefit function	Flexible, generally economic	Economic returns	Flexible
Form of benefit function	Point	Functional relationship between date of research success and benefit	Linear or nonlinear approximated by piecewise linear segments
Number of project funding options permitted	1	∞	∞
Number of constraints permitted	1 (budget)	1 (5-year budget)	Finite number (budget)
Method of handling uncertainty	Manual sensitivity	Simulation	Sensitivity analysis through interaction
Number of periods over which funding is optimized	1 period	Up to 5 periods	1 period
Speed of use	Fastest	Slow relative to benefit cost	Slow relative to benefit cost
Equipment required for solving allocation problem	None	Computer	Computer
Cost of using method (data sources, computer, analyst)	Least	High relative to benefit cost	High relative to benefit cost
Special properties	Computer can be used to reduce manual time requirements		Tabulates requirements for nonbudgetary resources also

one and permit direct consideration of multiple funding options and the effects of uncertain parameters.

A summary comparison of optimization methods is included in Table 21-7. Depending upon the combination of methods used in the evaluation system, the benefit-cost approach is generally the fastest and easiest to use. One of the simplest combinations consists of using successive ratings to order the projects and then dividing by expected costs. When alternatives need to be considered beyond what is feasible with a benefit-cost approach, a host of other models is available. The two described require more data processing equipment and analytical time than the benefit-cost approach does, but they also provide more information.

Although some aspects of the latter models are identified rather specifically, considerable flexibility is inherent in both. The benefit function of the simulation model consists of economic returns only. However, the function could be expanded to include noneconomic variables also. Each of the models

is flexible as to the combination of ranking methods that can be used to measure benefit. For example, a scoring model has been used to weight research objectives as part of a benefit contribution model that estimates benefits of projects to which an allocation of funds is subsequently proposed by the network model.

Framework for Investment in Management Tools

Conceptually, the decision framework for optimal investment in management is the same as for any other investment option: purchase units of management until the marginal returns added per dollar spent is equal to the marginal returns from the dollar invested in the next best alternative. Since administrative costs typically come out of the research budget, this framework is also valid for research management investment decisions. Management approaches are in direct competition with research projects for resources. There, the management approaches which add the most to the expected value of research (because of a better decision) per dollar spent should be engaged until the value gained from another dollar's investment is no greater than if invested in the marginal research project. This would equalize the marginal rate of return from alternative lines of investment. Hence, the amount of management used in different organizations could vary also. If all the research options in one organization are expected to yield a very high rate of return, its investment in management tools should be restricted to those that will yield at least as high a return through improved decisions. Another organization, with lower and more varied rates of return expected on research options, could afford to invest in more management.

The major problems in implementing such a framework are not conceptual. They are measurement problems: how to determine which management approach is dollar-for-dollar better than another and how to measure value from management tools in the same units as research projects. While much work has been undertaken to develop new ways for subjectively ranking projects and allocating resources to them, far less has been done to determine which is the best management approach to use. In fact, only one paper appears to have addressed this problem directly: Souder has reported the application of a scoring model to an evaluation of twenty-six project selection models.[22] Opinions were solicited from administrators and management scientists concerning the status of the models with respect to five criteria – realism, flexibility, capability, ease of use, and cost. The criteria were subjectively weighted and an overall score derived for each model. The only model included in that evaluation that was also discussed in this chapter, the Atkinson-Bobis model, tied for the highest score.[23]

Laboratory costs to obtain reasonably *objective* measures of costs and benefits of research management tools would probably be prohibitive. Controlled experiments would be necessary over lengthy periods of time sufficient to observe the benefits resulting from research projects selected with different tools. One is probably limited for practical purposes to *subjective* measures. Souder's subjective scoring approach provides a useful comparison of a number of management methods. However, it is not sufficient for determining the optimum level of investment in management. Factors of both benefit (e.g., realism and capability) and cost (e.g., dollar costs and ease of use) were included in the score. To determine the optimal investment in such management methods, benefits and costs must be separated and measured in the same units as for research projects. The dollar metric approach previously discussed has potential as an initial mechanism for subjectively placing management tools and research projects in comparable units of measurement. Then the marginal principle could be applied to both sets of options to select the optimum portfolio.

Summary

Considerable research has been conducted to develop management tools for possible substitution for or complementary use in subjective decision processes. Case examples in the application of such methods in public agricultural research organizations have been cited. Other literature has been selectively surveyed to emphasize the breadth of methodological developments for research project selection and resource allocation. A partial comparative evaluation of the selected methods is included with the survey. Applicability of the marginal principle for determining the optimum investment in research management has been emphasized and a rudimentary framework for implementing that principle suggested. Many research challenges remain in the area of methodological development. Particularly great is the need for innovative thought and practical experimentation to compare costs and benefits of alternative subjective decision processes.

NOTES

1. This chapter is Technical Article 11986 of the Texas Agricultural Experiment Station. Portions have been taken from C. R. Shumway, "Allocation of Scarce Resources to Agricultural Research: Review of Methodology," *American Journal of Agricultural Economics*, 55 (November 1973), 557-566, and from C. R. Shumway and R. J. McCracken, "Use of Scoring Models in Evaluating Research Programs," *American Journal of Agricultural Economics*, 57 (November 1975) (copyright © 1975 by the American Agricultural Economics Association). My sincere appreciation is extended to Ralph J. McCracken and

Ernest L. Corley for very substantial contributions to this paper. The two experiments in numerical evaluation of research reported here were separately conducted by them. Their permission to report on those experiments is gratefully acknowledged.

2. Thanks are due Dale Hoover for his clear articulation of this process. Although the terminology is for a state experiment station, the essential features are not much different from many USDA research units.

3. United States Bureau of the Census, *Statistical Abstract of the United States* (Washington, D.C.: United States Government Printing Office, 1968), p. 526; 1969, p. 524; 1971, p. 510; 1972, p. 522.

4. United States Bureau of the Census, *Statistical Abstract of the United States* (Washington, D.C.: United States Government Printing Office, 1971), p. 508.

5. W. L. Fishel, ed., *Resource Allocation in Agricultural Research* (Minneapolis: University of Minnesota Press, 1971).

6. J. R. Conner and V. C. McKee, "Florida's System for Resource Allocation in Agricultural Research," paper presented at the American Agricultural Economics Association Meetings, College Station, Texas, August 1974.

7. Dr. Ernest L. Corley designed and implemented the evaluation procedures used in the Agricultural Research Service experiment. This section has been developed from information he supplied.

8. This study was initiated in 1972 by the North Carolina Agricultural Experiment Station, J. C. Williamson, Jr., director, with the assistance of the Cooperative State Research Service. The help of Ralph J. McCracken in developing this section is gratefully acknowledged.

9. USDA and Association of State Universities and Land Grant Colleges, *A National Program of Research for Agriculture* (Washington, D.C.: United States Government Printing Office, 1966).

10. N. Dalkey and O. Helmer, "An Experimental Application of the Delphi Method to the Use of Experts," *Management Science*, 9 (April 1963), 458-467.

11. Basic references for these techniques include J. P. Guilford, *Psychometric Methods* (New York: McGraw-Hill, 1954); R. D. Luce and Howard Raiffa, *Games and Decisions* (New York: Wiley, 1957); C. W. Churchman, R. L. Ackoff, and E. L. Arnoff, *Introduction to Operations Research* (New York: Wiley, 1957).

12. See E. A. Pessemier and N. R. Baker, "Project and Program Decisions in Research Management," *R & D Management*, 2 (October 1971), 3-14.

13. Fishel, *Resource Allocation*, pp. 326-343.

14. Dalkey and Helmer, "Delphi Method."

15. Fishel, *Resource Allocation*, pp. 344-381.

16. See A. B. Nutt, "An Approach to Research and Development Effectiveness," *IEEE Transactions on Engineering Management*, EM-12 (September 1965), 103-112, and B. V. Dean and L. E. Hauser, "Advanced Material Systems Planning," *IEEE Transactions on Engineering Management*, EM-14 (March 1967), 21-43, for applications of benefit contribution models to resource allocation among defense research and development efforts.

17. For detailed references see N. R. Baker and W. H. Pound, "R & D Project Selection: Where We Stand," *IEEE Transactions on Engineering Management*, EM-11 (December 1964), 124-134; M. J. Cetron, Joseph Martino, and L. A. Roepcke, "The Selection of R & D Program Content – Survey of Quantitative Methods," *IEEE Transactions on Engineering Management*, EM-14 (March 1967), 1-13; R. W. Cartwright, "Research Management in a Department of Agricultural Economics," Ph.D. thesis (Lafayette, Indiana: Purdue University, 1971); N. R. Baker and J. R. Freeland, "Recent Advances in R & D

Value Measurement and Project Selection Methods," paper presented at the Forty-first National Meeting of the Operations Research Society of America (ORSA) in New Orleans, April 1972; and T. E. Clarke, "Decision-making in Technologically Based Organizations: A Literature Survey of Present Practice," *IEEE Transactions on Engineering Management*, EM-21 (February 1974), 9-23.

18. Arnold Paulson and D. R. Kaldor, "Evaluation and Planning of Research in the Experiment Station," *American Journal of Agricultural Economics*, 50 (December 1968), 1149-1162.

19. Cartwright, "Research Management."

20. A. C. Atkinson and A. H. Bobis, "A Mathematical Basis for the Selection of Research Projects," *IEEE Transactions on Engineering Management*, EM-16 (February 1969), 2-8.

21. N. R. Baker, W. E. Souder, C. R. Shumway, P. M. Maher, and A. H. Rubenstein, "A Budget Allocation Model for Large Hierarchical R & D Organizations," *Management Science*, 23, no. 1 (September 1976).

22. W. E. Souder, "A Scoring Methodology for Assessing the Suitability of Management Science Models," *Management Science*, 18 (June 1972), B526-543.

23. Atkinson and Bobis, *IEEE Transactions*.