AGENCY FOR INTERNATIONAL DEVELOPMENT
WASHINGTON, D. C. 20523

BIBLIOGRAPHIC INPUT SHEET

FOR AID USE ONLY
Batch 66

1. SUBJECT CLASSIFICATION

A. PRIMARY: Serials — Y-AM00-0000-G732

B. SECONDARY: Food production and nutrition--Fisheries--Philippines

2. TITLE AND SUBTITLE

Inland fisheries project; technical report,July-Dec.1973

3. AUTHOR(S)

(101) Philippines National Science Board; AID/ASIA/USAID/Philippines

4. DOCUMENT DATE	5. NUMBER OF PAGES	6. ARC NUMBER
1974	89p.	ARC RP639.209914 J94

7. REFERENCE ORGANIZATION NAME AND ADDRESS

Auburn

8. SUPPLEMENTARY NOTES (Sponsoring Organization, Publishers, Availability)

(In NSDB project no.7103)
(Research summary)

9. ABSTRACT

10. CONTROL NUMBER

PN-AAE-260

11. PRICE OF DOCUMENT

12. DESCRIPTORS

Freshwater fishes
Philippines

13. PROJECT NUMBER

14. CONTRACT NUMBER

AID/ea-180 GTS

15. TYPE OF DOCUMENT

AID 590-1 (4-73)

AID/ea-180 G75
Auburn
PN-AAE-260

see
RP
639.209914
9.94

INLAND FISHERIES PROJECT

PROGRESS REPORT FOR NSDB-ASSISTED PROJECT NO. 7103

July 1, 1973 Through December 31, 1973

(Report No. 4)

INLAND FISHERIES PROJECT
(NSDB-ASSISTED PROJECT NO.7103 AG)
U.P. COLLEGE OF FISHERIES
DILIMAN QUEZON CITY
PHILIPPINES

INLAND FISHERIES PROJECT

Participating Agencies

National Science Development Board
University of the Philippines College of Fisheries
Central Luzon State University
National Food and Agriculture Council (Department of Agriculture and Natural Resources)
Bureau of Fisheries
National Economic Development Authority
Province of Iloilo
Municipality of Leganes, Iloilo
United States Agency for International Development

Technical Staff

Rogelio O. Juliano	Project Director
Jose A. Carreon	Asst. Project Director
Melchor M. Lijauco	Project Leader
Virgilio A. Dureza	Project Leader
Gaudencio Villaroman	Asst. Project Leader
Juanito G. Galsim	Pond Superintendent
Antonio M. Fernando	Pond Superintendent
Romulo C. Aure	Research Assistant
Danilo Arceo	Research Assistant
Michael Cuenco	Research Assistant
Lourdes A. Dureza	Research Assistant
Joel R. Canlas	Research Assistant
Gregorio T. Bañacia	Research Aide
Homer R. Schmittou	Technical Advisor
John H. Grover	Technical Advisor
Bryan Duncan	U.S. Peace Corps Volunteer of the BF on special detail with the IFP, Iloilo

FOREWORD

This Inland Fisheries Project Technical Report No. 4 covers the period from July 1 through December 31, 1973. Although previous technical reports of the IFP (the first and second reports) were not numbered, it has been decided that thenceforth, technical reports of the project to the National Science Development Board shall be numbered consecutively.

From the entire staff of the IFP, acknowledgment is hereby given to the National Science Development Board for the financial assistance it has granted the project. The assistance and cooperation shared with us by the Department of Agriculture and Natural Resources (NFAC), the Bureau of Fisheries, the National Economic and Development Authority, the Province of Iloilo, the Municipality of Leganes, Iloilo, and the United States Agency for International Development are gratefully appreciated. Their contributions are valuable assets to the IFP.

The moral and administrative support to the project by the Central Luzon State University and the University of the Philippines had given the IFP staff the boost and incentive to work hard in fulfilling the objectives of the Project.

Grateful appreciation is also due the private sectors of the fishery industry for their advice and cooperative support.

ROGELIO O. JULIANO
Project Director

TABLE OF CONTENTS

FOREWORD ii

I. INTRODUCTION 1

II. RESEARCH ACTIVITIES

A. Research Completed

1. Bangus Production in Shallow Ponds with Plankton 3

2. Rate of Growth and Survival of Bangus Fry in Brackishwater Ponds 7

3. Combination Bangus-Shrimp Culture 9

4. Some Observations on the Effects of Aquatin and Brestan on the Growth of Lab-Lab in Concrete Tanks 12

5. Hito Tolerance to Formalin 13

Gusathion A 14

Aquatin (Planters Products) 21

Formalin (Apollo Chemicals) 23

Malachite Green Oxalate (Zinc Free) 25

Potassium Permanganate (Crystal) 27

6. Backyard Fish Culture 27

7. Screening of Feedstuffs:Laboratory Trials with Hito 28

B. Research In-Progress

1. Length-Weight Studies 31

2. Survey of Parasites and Bacterial Diseases of Bangus 31

3. Milkfish Production Freshwater Ponds with Different Fertilizer Systems 34

4. Basic Production and Effects of Different Fertilizers on the Culture of Hito 38

5. Basic Production and Effects of Different Fertilizer on the Culture of Common Carp 40

6. Carp Polyculture in Fertilized and Unfertilized Ponds 44

7. Tilapia Production with Biological Control in Fertilized Ponds 48

8. Rice-Fish Culture 49

9. System of Hito Natural Reproduction 50

C. Research Programmed (January 1 through June 30, 1974)

1. Brackishwater Station (Leganes, Iloilo) 52

2. Freshwater Station (Muñoz, Nueva Ecija) 53

III. Training and Extension

1. Fishpond Fertilizers and Fertilization 54

2. Platform Method of Fishpond Fertilization 60

3. Plankton Method for Raising Bangus 63

4. Length-Weight Table for Bangus 66

5. Bangus Transfer from One Salinity to Another 70

6. A Simple Salinometer 75

7. Problems of Freshwater Catfish Culture 78

IV. Status of Construction

A. Brackishwater Station (Leganes, Iloilo) 83

B. Freshwater Station (Nueva Ecija) 83

I. INTRODUCTION

The advent of the first half of FY 1973-74 saw the Inland Fisheries Project enter its third year of operation. The completion of the first phase of the construction of physical facilities of the Freshwater Fish Culture Station at CLSU, Muñoz, Nueva Ecija, and its inauguration on November 28, 1973 were important events observed by the project. Said station is now operational with its laboratory/administration building and fishpond facilities functioning. Important research activities in freshwater aquaculture are now in progress at the station.

The IFP took over the construction of the fishpond system of the Brackishwater Fish Culture Research Station at Leganes, Iloilo last October 1973. Since that takeover of the construction by administration, the station staff had to phase out the then existing research activities as soon as their individual schedules terminated. Some of these research activities were re-programmed at the Brackishwater Station to be started upon completion of some ponds at Leganes.

Research done in brackishwater aquaculture are: bangus production in shallow ponds (plankton method), rate of growth and survival of bangus fry, shrimp-bangus production and the effects of pesticides on growth of lab-lab. Some bangus disease studies have also been made. Freshwater aquaculture researches currently going on are in bangus production (with and without fertilization), common carp production, carp polyculture, tilapia culture, ricefish culture and natural breeding of hito.

Based on some results of research completed, particularly on fertilization of bangus ponds, platform method of applying fertilizer, salinity tolerance of bangus and

other researches, the IFP developed extension literature on these subject matters. These literature or leaflets are intended to be printed as extension materials for distribution to fish farmers of the country preferably through the extension workers of the Bureau of Fisheries.

Reports on status of construction of the two stations and the extension/training activities of the project are also included in this report.

ROGELIO O. JULIANO
Project Director

A. Research Completed

1. Bangus Production in Shallow Ponds with Plankton

Introduction

This experiment is the third in a series of studies on bangus production with plankton in shallow ponds. The result of the first and second studies were reported in two previous technical reports.

Methods and Materials

The experiment was undertaken at the BF Molo Farm. Iloilo City from July to November, 1973.

Two ponds approximately 0.11 ha in size were used. The ponds were treated with Gusathion at the rate of 0.5 and 0.3 ppm on July 20 and 23, respectively, to eradicate Poecilia and Tilapia. After several washings, the ponds were left to dry for 5 days. Water was then admitted to a depth of 40 cm.

The ponds were stocked with bangus fingerlings averaging 7.1 g at the rate of 5,000/ha and 5,270/ha, respectively, between July 31 and August 2. The fish grazed on lab-lab grown in the pond. Fertilization commenced on August 23 to induce growth of plankton when lab-lab appeared depleted. Fertilizer 18-46-0 was applied on platform, at the rate of 10 kg P_2O_5/ha on August 23 and in solution on September 3 and November 2. In addition, 21-0-0 fertilizer was applied in solution on September 3 and September 12.

Salinity was measured at about 33 ppt at the start of culture period, decreasing to about 14 ppt by the end of August and to about 8 ppt by November 5 due to rains.

Fig. 1.01 shows the empirical growth curves of bangus in the two ponds. The growth of bangus in the two ponds generally kept pace with each other up to the 45th day of culture. From then on, fish in pond 6 slowed down substantially and exhibited fluctuation. Starting at the 100th culture day the bangus hardly grew at all and in fact lost weight in Pond 5. Final individual weights (average) were 206 g for Pond 5 and 100 g for Pond 6.

Although the growth rate in Pond 5 was about twice that of Pond 6, 1.7 g/fish/day and 0.8 g/fish/day respectively, the standing crops at harvest were about the same with 544 kg/ha for Pond 5, 480 kg/ha for Pond 6 (Table 1.01). This result was due to the big

difference in survival rates of 52.9% for Pond 5 and 90.9% for Pond 6 (Table 1.02). The production for Ponds 5 and 6 were 4.6 kg/ha/day and 4.0 kg/ha/day respectively. An additional estimate of 30 kg/ha of shrimps for Pond 6 should be noted.

Comparing Ponds 5 and 6 with adjacent Ponds 3 and 4 from which their stock of bangus were taken revealed an interesting point. At the size range of 7 g to about 35 g, the growth rates of bangus in the 4 ponds were about the same at 1.3 to 1.4 g/fish/day despite the fact that their stocking rates were 5,000/ha and 16,000/ha. This may infer that the growth rate is maximum at about 1.3 to 1.4 g/fish/day when natural food is abundant.

Table 1.01. Mean weights and net gains of bangus raised in shallow plankton ponds at BF Molo Farm, Iloilo City from August 2 to November 27, 1973.

Culture	Pond 5 5,000/ha		Pond 6 5,273/ha	
Day	Mean wt. (g)	Net Gain (g/day)	Mean wt. (g)	Net Gain (g/day)
0	7.1	-	7.1	-
15	28.1	1.4	26.4	1.3
29	50.0	1.6	34.7	0.6
44	81.8	2.1	61.5	1.7
58	99.4	1.3	64.0	0.2
72	124.4	1.8	81.2	1.2
79	142.1	2.5	71.7	(-)
100	208.7	3.2	97.8	1.2
118	206.0	(-)	100.0	0.1
	mean net gain(g/day)	1.7		0.8

Table 1.02. Production and survival rate of bangus in shallow plankton ponds at BF Molo Farm, Iloilo City, August 2 to November 27, 1973.

	Pond 5 5,000/ha	Pond 6 5,273/ha
Stocked: mean wt. (g)	7.1	7.1
No./pond	533	588
Standing crop kg/ha	35.5	37.4
Harvested: mean wt. (g)	206.0	100.0
No./pond	282	535
Standing crop kg/ha	544	480
Net Production kg/ha/day	4.6	4.0
Survival (%)	52.9	90.9

Fig. 1.01. Empirical growth curves of bangus in shallow ponds with plankton at BF Molo Farm, Iloilo City, August 2 to November 27, 1973.

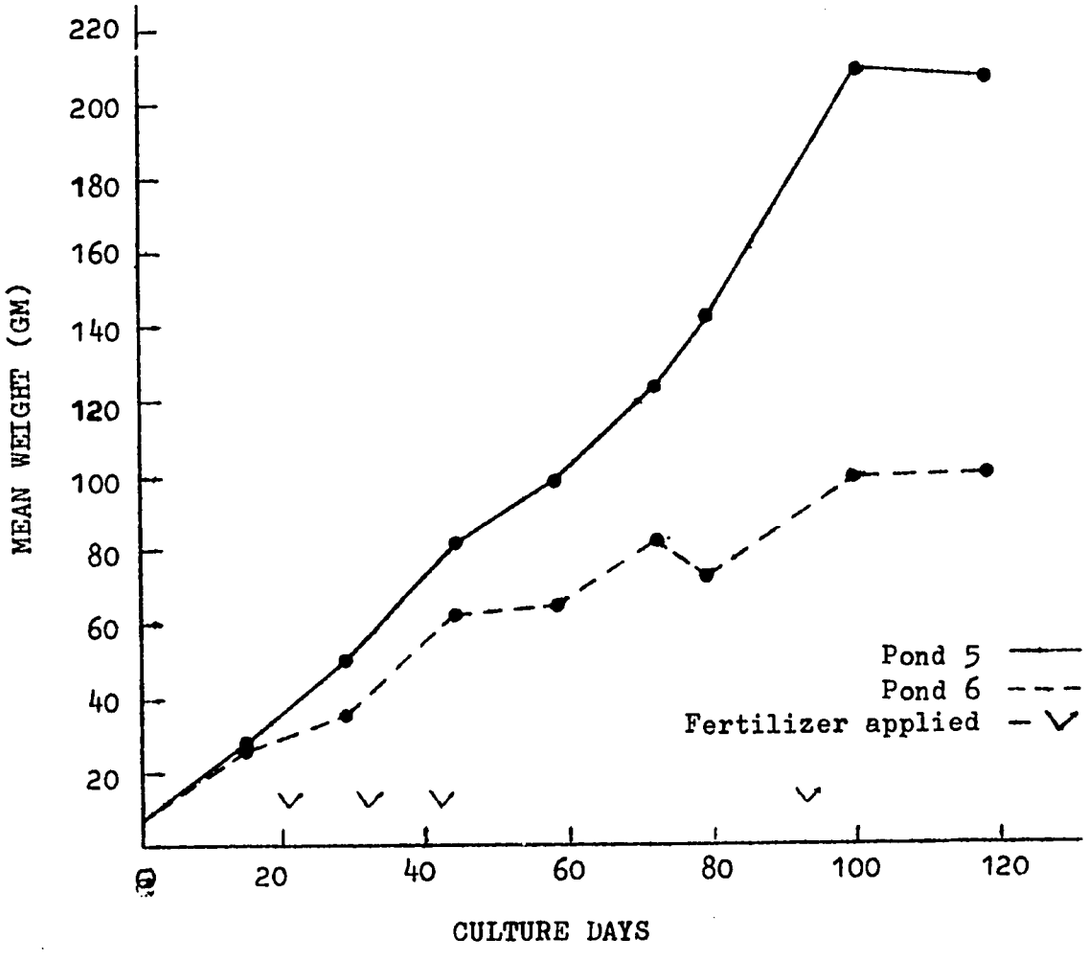

2. Rate of Growth and Survival of Bangus Fry in Brackishwater Ponds

Introduction

This is the first of a series of studies on the rate of growth and survival of bangus fry in brackishwater ponds. This report presents the results of an experiment conducted in three nursery ponds from February to August, 1973 at the BF Molo Farm, Iloilo City.

Methods and Materials

Three ponds (Ponds 2, 3 and 4), each measuring about 0.11 ha were prepared and grown with lab-lab beginning February 22, 1973. In the morning of June 28, bangus fry were delivered at the experiment site contained in unglazed earthen jars (approximately 2 liters in capacity) and transported overland for a distance of 30 km. The fry were kept in the jars placed under the shade while water was freshened with brackishwater at the rate of 500 ml/hour. Water in the jars was maintained from 32 to 34 ppt salinity and temperature between 30° and 32°C.

In the afternoon of same day, 1,685 fry were stocked in each of the ponds but confined in a temporary 1 x 2 m acclimation pond provided each pond. Water in the acclimation pond was kept a few centimeters lower than that of the nursery pond proper. Covers were provided using coconut leaves and bamboo splits supported by wooden pegs at each corner, to cut off direct sunlight. The ranges in salinity and temperature from jars to ponds were measured at 2 ppt to 10 ppt and 1 to 3.5°C, respectively.

The fry were kept in confinement and fed with fragments of lab-lab every morning from the day after stocking. On the 7th day, the fry were released by making narrow breaks in the dikes of the acclimation ponds allowing water from the pond proper to flow in gradually. At this stage the fry, which had become visibly opaque and silvery, were observed to swim freely out of the smaller confinement.

In the acclimation ponds the stocking rate was approximately 842 fry/m^2. When released, the stock was reduced to 1.6 fry/m^2.

The fish were sampled periodically from day 0 to day 33. Pond 2 was totally inventoried from July 31 to August 6, 1973, to give way for another experiment. Ponds 3 and 4 were not inventoried, for after day 33 fish were periodically removed for use in other experiments. Mean weight of fish in each pond on July 31 (day 33) was taken as the final mean weight for fish in individual ponds.

Results and Discussions

Table 1 summarizes the rate of growth of the fry as observed from the mean weights measured periodically. In the acclimation pond, the fry gained about 122% its initial weight per day during the first 4 days, and by about 196% going to the 7th. Overall the gain was 2.6 mg/day or equivalent to 154% its initial weight during 7 days of confinement in the acclimation pond.

The fish continued to grow rapidly after being released into the pond proper. Samples on the 14th showed a combined mean weight of 155 mg for the 3 ponds or a gain of 19.3 mg/day over a period of 7 days. The trend further improved with mean weights of 920 mg and 7.1 g on the 21st and 33rd day of culture, respectively.

Table 2.01. Mean weights of bangus fry sampledat various culture periods in given ponds.

Culture day	Mean Weight		
	Pond 2	Pond 3	Pond 4
0	1.7 mg	1.7 mg	1.7 mg
4	10.0 mg	10.0 mg	10.0 mg
7	20.0 mg	20.0 mg	20.0 mg
14	198.0 mg	132.0 mg	134.0 mg
21	920.0 mg	670.0 mg	970.0 mg
28	-	2.4 g	-
33	7.1 g	7.1 g	7.1 g

Fish were to the acclimation ponds until after sampling on culture day 7.

When finally inventoried on August 6, Pond 2 had a survival rate of 89.6%.

3. Combination Bangus-Shrimp Culture

Introduction

A preliminary experiment on the combined culture of bangus and shrimp (assumed to be Panaeus indicus but not yet confirmed) was conducted in a pond to provide basid knowledge about this type of culture.

Methods and Materials

The preliminary experiment was conducted in a nursery pond at the Molo Station of the Bureau of Fisheries, Iloilo City.

Gusathion was applied to the pond at a rate of 0.1 ppm on July 31 to eradicate wild fishes (primarily Poecilia and Tilapia). After washing and drying from August 8 to 23, 1973, the pond was fertilized with 2.4 kg 18-46-0 (approximately 10 kg P_2O_5/ha) by broadcasting. No subsequent applications of fertilizer were made during the culture period. Standard water management procedures for lab-lab production were practiced throughout the culture period beginning August 23. Water depth after stocking was maintained at about 25 to 30 cm.

A total of 3,330 bangus and 28,756 shrimp/ha were stocked in the pond from September 4 through 17 (Table 3.01). The mean weights of bangus and shrimp stocked were 3.31 g and 0.0083 g, respectively.

Table 3.01. Dates, numbers and weights of bangus and shrimp stocked in an experimental pond from September 4 through 17.

Date	Number stocked				Weight (g) stocked			
	Bangus		Shrimp		Bangus		Shrimp	
	/pond	/ha	/pond	/ha	/pond	/ha	/pond	/ha
Sept 4	174	1,583	0	0	817.8	7,442	0.0	0
6	131	1,192	0	0	327.5	2,980	0.0	0
11	0	0	160	1,456	0.0	0	1.3	12
13	61	555	0	0	67.1	611	0.0	0
17	0	0	3,000	27,300	0.0	0	24.9	227
Total	366	3,330	3,160	28,756	1,212.4	11,033	26.2	239

The pond was drained and the bangus harvested on November 27 and the shrimp harvested on November 27 and 28. The bangus and shrimp harvested on November 27 were counted and weighed en masse. The shrimp harvested on November were not counted, and their weights were only estimated. All shrimp were not recovered because of the difficulty of locating them in the pond mud. Bangus were in culture from 75 to 84 days with over 80% in culture for 82 to 84 days. Shrimp were in culture from 69 to 73 days with 95% in culture for the 69-day period.

Results and Discussion

Lab-lab grew well in the early period of culture but was replaced in the latter half by the filamentous lumut and rooted, vascular digman.

A total of 345 bangus weighing 56 kg and 2,241 shrimps weighing 9 kg were harvested on November 27. An estimated 750 shrimp weighing 3 kg were harvested on November 28 for an approximate total of 3,000 shrimp weighing 12 kg. Mean weights at harvest were 162 g for bangus and 4 g for shrimp. Standing crops at harvest were 510 kg bangus/ha and approximately 109 kg shrimp/ha. Some *Poecilia* and *Tilapia* were harvested but were not counted or weighed. Survival of bangus was 95% and an estimated 95% of the shrimp were recovered.

The bangus yield of 510 kg/ha was about "normal" for a well managed pond with lab-lab as the food source. The shrimp yield of about 109 kg/ha may be considered a bonus, although it is probable that some competition for food occurred between bangus and shrimp. However, the combined total yield of over 600 kg/ha in only 3 months with only one application of fertilizer is a high production. Wholesale prices for bangus and shrimp of the sizes harvested were about ₱2.50 and ₱7.00/kg, respectively, in November. Based on these prices the wholesale value of the pond yields were ₱1,275/ha for bangus, ₱763/ha for shrimp and ₱2,038/ha for both. The 109 kg of shrimp had a wholesale value equal to over 300 kg of bangus.

The results of this preliminary trial are very promising, indicating that high yields of both bangus and shrimp may be obtained from a combination culture of the two. Also the combination culture may give higher profits than a monoculture of either species. A replicated, controlled experiment is planned for implementation at the Brackishwater Station in late 1974.

Table 3.02. Summary data on bangus and shrimp culture in an experimental pond.

Item	Bangus	Shrimp
Number harvested /pond	345	3,000
Number harvested/ha	3,140	27,300
Weight (kg) harvested/pond	56	12
Weight (kg) harvested/ha	510	109
Weight (kg) stocked/ha	11	<1
Net gain (kg)/ha	499	109
Mean weight at stocking (g)	3.31	0.008
Mean harvest weight (g)	162	4.0
Times increase in mean weight	49	500
% recovery	95	95
Wholesale value of yield (₱/ha)	1,275	763

4. Some Observations on the Effects of Aquatin and Brestan on the Growth of Lab-lab in Concrete Tanks

Introduction

Commercial tin-based molluscicides Aquatin and Brestan are being used extensively by farmers as "fertilizers" for inducing lab-lab growth in fishponds. Neither is a fertilizer and would have no fertilization effect at the levels they are reportedly used. Since both are toxic to aquatic animals, an assumption was made that, if the molluscicides did indeed induce lab-lab growth, the grazing animal component of lab-lab was decreased or eliminated thus allowing the plant component to grow unchecked resulting in a net increase in total lab-lab.

A preliminary experiment was conducted with the following objectives:

(1) To determine by observation if Aquatin or Brestan treated tanks would produce greater amounts of lab-lab than untreated tanks.

(2) If so, to measure the relative abundance of animal organisms in treated and non-treated tanks.

Methods and Materials

The study was carried out in three trials from May to October, 1973. Each trial was terminated after 14 or 21 days of study, using 12 cylindrical concrete tanks of each approximately 1 m^2. The tanks contained 10 cm of bottom soil. Treatments were repeated in the same tanks in the second and third trials. Each trial was begun by fertilizing all tanks with 200 g chicken manure and 4.4 g 18-46-0 each. Pond water was initially poured into each tank to a depth of 5 cm and subsequently raised to and maintained at approximately 10 to 15 cm. Each tank was innoculated with 100 g (wet weight) of lab-lab material taken from a fishpond. Aquatin was applied in 4 tanks at 0.2 ppm; Brestan was applied in another 4 tanks at 0.3 ppm; the remaining 4 tanks served as untreated controls. The applications of treatment chemicals were made after fertilization and lab-lab innoculation in the first trial, and before fertilization in the second and third trials. Relative abundance and general characteristics of lab-lab were determined

by visible observations on the 2nd, 7th, 14th and 21st days after applying chemicals (1st trials) or innoculating with lab-lab (2nd and 3rd trials). Relative abundance of plant and animal organisms comprising the lab-lab was observed by microscopic examination of samples taken from each tank.

Results and Discussion

There was no apparent difference in lab-lab production between Aquatin and Brestan treated tanks as were observed in lab-lab production between treated and non-treated control tanks. In all trials and replications within treatments, tanks treated with both Aquatin and Brestan produced greater amounts of total lab-lab than non-treated tanks. However, in all replications within treatments of all trials, lab-lab in non-treated tanks contained greater amounts and varieties of animal organisms than tanks treated with both (or either) Aquatin and (or) Brestan. Animal organisms were abundant throughout the experimental period in all non-treated tanks of all trials, but were observed to be in low abundance or absent in treated tanks following treatment. The most abundant groups of animal organisms present during the experimental period were rotifers, crustaceans, ciliates and flagellates. Rotifers and crustaceans appeared to be most affected by Aquatin and Brestan while flagellates appeared least affected. Total lab-lab was increased by use of low dosages of Aquatin and Brestan. However, the animal component of lab-lab as observed was drastically decreased or eliminated which was probably the reason for the increase in total lab-lab. Although total lab-lab was increased by Aquatin and Brestan, the nutritional value of lab-lab was changed. Therefore, it remains to be determined whether the productive value of the lab-lab was increased along with the increased volume.

5. Hito Tolerance to Formalin

Introduction

External parasites are among the major causes of loss of fish. Treatments are customarily made when mortality is observed, but by this time many fish may have died and others are so severely affected that they may fail to survive treatment. Therefore a prophylactic treatment for external parasites is desirable. Among the chem-

icals commonly used for prevention of ectoparasite and recognized as effective is formalin. This experiment tested the tolerance of hito to different doses of formalin.

Methods and Materials

Commercial formalin in four concentrations, 200, 400, 600 and 800 ppm, were tested on hito fingerlings in the form of short baths. Three consecutive 5 min formalin baths with an interval of 15 min between baths as a recovery time were made. Hito fingerlings from the Institute of Fisheries Development and Research, where they were produced by induced spawning, weighing about 2 g each were used in this experiment. Upon arrival at the Freshwater Station on October 20, the fingerlings were allowed to rest for 12 hr before formalin treatment. One hundred fifty fish was used for each treatment and 300 for the control. Later all fish were held in 60-l glass aquaria and given supplemental feed (chopped hard boiled egg) from October 20 to November 20 at the rate of 5% of total body weight per day.

Results and Discussion

Hito fingerlings tended to school or congregate before treatment but when formalin was introduced into the water, the fish immediately dispersed and swam about restlessly. Once the fish were transferred to the recovery water they assembled again. Filament-like mucous peeled off the hito skin after the first formalin bath. Fish from all treatments and the control had 100% survival for at least one month following treatment. Water temperature and pH ranged from 27.0 to 27.6°C and 7.7 to 8.2, respectively.

Gusathion A (Bayer)

Introduction

Gusathion A is an organo-phosphate base agricultural insecticide that has been adopted for use in fish ponds as a molluscicide and pisicide. It has been used indiscriminately without exact knowledge of its effectiveness, proper concentrations to be used, or residual properties. The objectives of this study was to determine lethal concentrations of Gusathion A for bangus, tilapia, Poecilia and common brackishwater fish pond snails,

Thiara sp., under defined conditions.

Methods and Materials

Experiment 1 - Six concentrations of *Gusathion A* were tested at two salinities, 10 ppt and 30 ppt, with controls, and two replications. The pesticide concentrations tested, based upon the active ingredient and expressed as parts per million (ppm), were 0.0125, 0.025, 0.05, 0.1, 0.2, and 0.4. Concrete tanks were utilized. Each tank was filled with 48 liters of rain water, and the salinity adjusted with solar salt. Each tank was stocked with five bangus fingerlings averaging 7 cm in length, five tilapia ranging from 3 to 7 cm in length and five *Poecilia* ranging from 3 to 7 cm in length. All fish were conditioned to the appropriate salinities before stocking in experimental tanks. Approximately 20 snails were placed in each tank. Water quality determinations were made at the beginning of the experiment: temperature 25.5°C; oxygen 4.8 to 6.6 ppm; pH 8.2 to 8.8. During the course of the experiment the water temperature ranged from 25.5°C to 29.6°C. Fish mortalities were recorded periodically throughout each day. The experiment was terminated after 96 hours.

Experiment 2 - Four concentrations of *Gusathion A* were tested at 30 ppt salinity, with controls, and three replications. The pesticide concentrations tested, based upon active ingredient and expressed as parts per billion (ppb), were 12.0, 6.0, 3.0 and 1.5. Plastic tanks were utilized. Each tank was filled with 32 liters of well water and the salinity adjusted with solar salt. Five bangus fingerlings, five tilapia and five *Poecilia* were stocked in each bag. Water temperature during the experiment ranged from 29°C in the early morning to 35°C in the afternoon. pH values varied from 7.7 in control tanks to 8.0 in tanks with the highest pesticide concentration. Oxygen varied from 6.0 to 7.1 ppm. Mortalities were recorded periodically each day. The experiment was terminated after 72 hr.

Results and Discussion

Experiment 1 - Pond snails remained alive at the highest pesticide concentration, 0.4 ppm, for the duration of the experiment. Considering the possibility that concentrations used in ponds would

have to be doubled to attain the same degree of effectiveness as in experimental tanks, the effectiveness and economy of Gusathion A as a molluscicide is questioned.

At concentrations of 0.4 and 0.2 ppm total fish kills were obtained within 1 and 2 hr (Table 4.01). At 0.1 ppm total kills of tilapia and Poecilia, and partial kills of bangus were obtained within 1 hr with some bangus surviving up to 5 hr. The data at this concentration suggests that Gusathion A is more toxic at 30 ppt than at 10 ppt salinity. At 0.05 ppm total kills of tilapia and Poecilia and partial kills of bangus, were obtained within 4 to 5 hr, with some bangus surviving up to 22 hr. The data suggests higher toxicity at 30 ppt salinity. At 0.025 ppm and 10 ppt salinity total kills of tilapia and Poecilia, and partial kills of bangus, were obtained within 22 hr, with most bangus surviving 96 hr. At 30 ppt total kills of all three species were obtained within 22 hr. At 0.0125 ppm total kills of tilapia and Poecilia were obtained within 22 hrs, with all bangus surviving 96 hr. All controls survived 96 hr.

The data strongly suggests that Gusathion A is more toxic at 30 ppt than at 10 ppt salinity. Gusathion A is highly selective with respect to the species in question. Tilapia is the most sensitive and bangus the most resistant. This phenomenon has implications for the possible eradication of tilapia and Poecilia from ponds in which bangus is present. Sub-lethal toxicity, manifested as abnormal swimming behavior, was observed in surviving bangus at 0.025 and 0.0125 ppm. Behavior returned to normal, however, before termination of the experiment.

Although all tanks were drained, rinsed, scrubbed, dried and filled with fresh water after termination of the experiment, toxic residues persisted. This was tested by stocking new fish of all three species in the freshly prepared tanks nine days after termination of the experiment. Total kills were obtained overnight in tanks formerly treated with 0.4 and 0.2 ppm Gusathion A, and partial kills obtained in tanks formerly treated with 0.1 and 0.05 ppm. No kills were obtained in tanks formerly treated with 0.025 and 0.0125 ppm, and in the control tanks.

Experiment 2 - At 12 ppb Gusathion A a total kill of tilapia was obtained within 6.5 hr and Poecilia within 19 hr (Table 4.02). All bangus fingerlings, with the exception of two fish in one replicate, survived 72 hr. At 6.0 and 3.0 ppb partial kills of tilapia and Poecilia were obtained. 1.5 ppb was essentially non-lethal for all species with only one mortality resulting.

Under the conditions obtaining in experiments one and two, 0.0125 ppm (12.5 ppb) active ingredient of Gusathion A is effective in completely eradicating tilapia within 6.5 hr and Poecilia within 19 hr, with all bangus surviving up to 96 hr (termination of experiment). A transitory behavioral anomaly, however, was observed in bangus at the above concentration, suggesting that Gusathion A causes a reversible, sub-lethal, neuro-toxicosis.

Table 4.01. Bioassay of various concentrations of Gusathion A on bangus, tilapia and Poecilia at 10 ppt and 30ppt salinities (Experiment 1).

Salinity (ppt)	Concentration (ppm)	Fish remaining alive after hours										
		1	2	3	4	5	22	30	47	53	70	96
10	0.4	1B 2B	0 0									
30	0.4	0 0										
10	0.2	4B 0 1P 4B 2T 1P	0 0									
30	0.2	3B 1T 0 4B 0 2B	0 0									
10	0.1	5B 5T 4P All	2B 5B	0 2B	1B	———	0					
30	0.1	5B 4T 5P 3B 2T 1P	1B 0	0								
10	0.05	All All	5B 0 4P 5B 0 5P	5B 0 2P 5B 0 2P	4B 0 1P 5B	3B 4B	1B 0	0				
30	0.05	5B 3T 5P 5B 4T 5B	 ——— 5B 1T 5P	1B 1T 1P 5B 0 4P	0 4B	2B	0					

(over)

Table 4.01 (Continuation). Bioassay of various concentrations of Gusathion A on bangus, tilapia, Poecilia at 10 ppt and 30 ppt salinities (Experiment 1).

Salinity (ppt)	Concentration (ppm)	Fish remaining alive after hours										
		1	2	3	4	5	22	30	47	53	70	96
10	0.025	All	5B 4T 5B	5B 3T 4P	5B 0 3P		4B					
		All		5B 4T 4P		5B 2T 4P	3B					
30	0.025	All		5B 3T 4P	4B 1T 4P	4B 1T 1B	0					
		All	5B 3T 5P		5B 2T 5P	5B 1T 5P	0					
10	0.0125	All					5B 0 1P		5B			
		All			5B 4T 5P		5B					
30	0.0125	All			5B 4T 5P	5B 4T 4P	5B					
		All					5B					
10	0.0	All										
		All										
30	0.0	All										
		All										

B = bangus T = tilapia P = Poecilia

Table 4.02. Bioassay of various concentrations of Gusathion A on bangus, tilapia and Poecilia at 30 ppt salinity (Experiment 2)

Concentration (ppb)		Fish remaining alive after hours														
	1	2	3	6.5	9.5	19	24	26	43	46	51	67	72			
12.0	All	5B 1T 5P		5B 0 5P	5B 0 2P	5B										
	All		5B 1T 5P	5B 0 3P	4B 0 1P	3B										
	All		5B 2T 5P	5B 0 4P	5B 0 1P	5B										
6.0	All					5B 3T 5P		5B 3T 4P		4B 3T 4P						
	All		5B 5T 4P	5B 1T 4P	5B 0 4P	5B 0 3P										
	All			5B 5T 4P	5B 2T 4P	5B 1T 4P										
3.0	All					5B 4T 5P			5B 3T 5P							
	All					4B 5T 5P										
	All						5B 4T 5P					4B 4T 5P				
1.5	All				4B 5T 5P											
	All					Terminated (leaky bag)										
	All															
0.0	All					5B 5T 4P										
	All					4B 5T 5P										
	All					Terminated (leaky bag)										

B = bangus T = tilapia P = Poecilia

Aquatin (Planters Products)

Introduction

Aquatin is a Triphenyltin compound recommended by the manufacturer for use in fish ponds as a molluscicide. It is also widely used as a fish toxicant. The objective of this experiment was to determine lethal concentrations of Aquatin for bangus, tilapia, Poecilia and fish pond snails, Thiara sp., under defined conditions.

Methods and Materials

Four concentrations of Aquatin were tested at 20 ppt salinity, with controls, and three replications. The concentrations tested, based upon the active ingredient and expressed as parts per million (ppm) are 0.2, 0.1, 0.05, and 0.025. Plastic bags were utilized. Each bag was filled with 32 liters of well water, and the salinity adjusted with solar salt. Each bag was stocked with five bangus (6.9 - 8.4 g), five tilapia (4.2 - 9.6 g), five Poecilia (1.3 - 3.2 g) and five snails. pH one hour after addition of Aquatin was 7.2 - 7.4. The water temperature throughout the experiment ranged from 26°C to 36 C. Mortalities were recorded periodically throughout each day. The experiment was terminated after 72 hr.

Results and Discussion

Aquatin is non-lethal for pond snails at the concentrations tested. All snails at all concentrations survived for the duration of the experiment. At 0.2 ppm (Table 4.03) total kills of tilapia were obtained within 8 hr, bangus between 26 and 42 hr and Poecilia between 60 and 72 hr. At 0.1 ppm total kills of tilapia were obtained within 6 hr, bangus within 50 hr, and Poecilia survived 72 hr. At 0.05 ppm partial kills of all species were obtained. At 0.025 ppm mortalities were not significantly greater than those obtained in the controls.

At all concentrations tilapia was the most sensitive to Aquatin. At 0.2 and 0.1 ppm Poecilia was most resistant. However, at 0.05 and 0.025 ppm the data suggests that bangus was most resistant.

Table 4.03. Bioassay of various concentrations of Aquatin on bangus, tilapia and Poecilia at 20 ppt salinity.

Concentration (ppm)	Fish remaining alive after hours																
	1	2	3	6	8	14	16	18	20	22	24	26	42	44	50	60	72
0.2	5B	5B		5B		4B	3B		3B	2B	1B		0				
	4T	1T	—	0	—	0	0	—	0	0	0	—	0	0	—	—	—
	5P	5P		5P		2P	2		1P	1P	1P		1P				
			5B	5B	5B	5B			4B			1B	0			0	
	All	—	3T	1T	0	0	—	—	0	—	—	0	0	—	—	0	0 —
			5P	5P	5P	4P			4P			4P	4P			1P	
		5B		5B			4B	3B	1B	1B	1B	0	0				
	All	4T	—	0	—	—	0	0	0	0	0	0	0	0	—	—	—
		5P		5P			5P	4P	4P	3P	2P	2P	1P				
0.1	5B	4B		4B		4B							2B	1B	0		
	2T	0	—	0	—	0	—	—	—	—	—	—	0	0	0	—	0 —
	5P	5P		4P		1P							1P	1P	1P		
	5B	5B		5B	5B	5B		5B					2B		0		
	4T	1T	—	0	0	0	—	0	—	—	—	—	0	—	0	—	0 —
	5P	5P		5P	4P	3P		2P					1P		1P		
	5B	5B	5B	5B			5B		5B				1B		0		0
	3T	2T	1T	0	—	—	0	—	0	—	—	—	0	—	0	—	0 —
	5P	5P	5P	5P			4P		3P				3P		3P		1P
0.05	5B			5B	5B	5B	4B			4B			3B				
	4T	—	—	3T	2T	0	0	—	—	0	—	—	0	—	—	—	—
	5P			5P	5P	3P	3P			2P			1P				
		5B	5B	5B		3B	3B									2B	
	All	3T	2T	0	—	0	0	—	—	—	—	—	—	—	—	0	
		5P	5P	4P		2P	1P									1P	
		5B		5B			5B	5B	5B	4B			3B		3B	1B	
	All	4T	—	4T	—	—	4T	4T	4T	4T	—	—	4T	—	4T	4T	—
		5P		4P			3P	2P	1P	1P			1P		0	0	
0.025		5B	5B		5B	5B											
		4T	3T	—	2T	2T	—	—	—	—	—	—	—	—	—	—	—
	All	5P	5P		5P	3P											
	5B	5B	5B	5B								5B					
	4T	3T	2T	0	—	—	—	—	—	—	—	0	—	—	—	—	—
	5P	5P	5P	5P								4P					
	5B			5B		5B							5B				
	4T	—	—	4T	—	2T	—	—	—	—	—	—	0	—	—	—	—
	5P			3P		3P							3P				
0.0									5B						5B		
		—	—	—	—	—	—	—	5T	—	—	—	—	—	5T	—	—
	All								4P						3P		
					5B			4B									
	All	—	—	—	5T	—	—	5T	—	—	—	—	—	—	—	—	—
					4P			4P									
						5B											
	All	—	—	—	—	4T	—	—	—	—	—	—	—	—	—	—	—
						5P											

B = bangus T = tilapia P = Poecilia

Formalin (Apollo Chemicals)

Introduction

Formalin is the common name for the standard aqueous solution of 37 ppt by weight of formaldehyde. Formalin is used extensively in fish culture to control external parasites of fish. The objective of this experiment was to determine tolerance levels of bangus for formalin under a prescribed set of conditions.

Methods and Materials

Five concentrations of formalin were tested at three salinities; 15, 30 and 60 ppt, with controls. The concentrations tested, based upon the commercial formulation (not active ingredient), and expressed as parts per million (ppm), are 5 and 25 (with three replicates), and 75, 150 and 300 (with one replicate). Plastic bags were utilized. Each bag was filled with 32 liters of brackishwater from a supply canal, and the salinity adjusted with solar salt. Each bag was stocked with 10 bangus fingerlings averaging 7.1 g each, which were previously conditioned to the appropriate salinities. Water temperature during the experiment varied from 26 to 34 C. Pump aeration was used in bags containing 75, 150 and 300 ppm formalin, because of oxygen depletions apparently caused by formalin. Mortalities were recorded periodically throughout each day. The experiment was terminated after 72 hr.

Results and Discussion

At 5, 25, and 75 ppm formalin insignificant mortalities were obtained (Table 4.04). At 150 ppm mortalities were 80 and 90%, and at 300 ppm mortalities were 60 to 80%. The higher mortality at 150 ppm cannot be explained.

Oxygen readings taken at 3:30PM, six hr after the addition of formalin, gave an average of 8.07 ppm oxygen in control bags, 4.05 ppm oxygen in bags with 5 ppm formalin, and 2.2 ppm oxygen in bags with 25 ppm formalin. Thus, to avoid kills due to oxygen depletion, pump aeration was used for all higher concentrations of formalin. The high oxygen readings obtained from the control bags may be due to the time of day the readings were taken, and the heavy plankton growth present in most bags. The plankton died and turned brown at 75, 150 and 300 ppm formalin.

Table 4.04. Bioassay of various concentrations of formalin on bangus at 15, 30 and 60 ppt salinities.

Salinity (ppt)	Concentration (ppm)	Fish remaining alive after hours						
		12	24	36	48	52	60	72
	5.0	10						
15	5.0	10						
	5.0	10						
	5.0	8						
30	5.0	10						
	5.0	10						
	5.0	10						
60	5.0	10						
	5.0	10						
	25.0	10						
15	25.0	10						
	25.0	10						
	25.0	10						
30	25.0	10						
	25.0	10						
	25.0	10		8				
60	25.0	9						
	25.0	10						
15	75.0	10						
30	75.0	10			9	8		
60	75.0	10						
15	150.0	10	2	1				
30	150.0	10	4	2				
60	150.0	10	8	1				
15	Control	10						
30	Control	10						
60	Control	10						
15	300	10			5	3	2	
30	300	10	9		6	2		
60	300	10	9		8	4		

Malachite Green Oxalate (Zinc Free)

Introduction

Malachite Green Oxalate is a dye widely used in aquaculture to control external infections of fish by fungi and protozoa. The objective of this experiment was to determine tolerance levels of bangus for malachite green under defined conditions.

Methods and Materials

Five concentrations of malachite green were tested at two salinities, 15 and 30 ppt, with controls, and two replications. The concentrations tested, based upon commercial formulation, and expressed as parts per million (ppm), were 0.1, 0.2, 0.4, 0.8 and 1.6. Plastic bags were utilized. Each bag was filled with 24 liters of well water, and the salinity adjusted with solar salt. Each bag was stocked with five bangus fingerlings averaging 9 cm in length, which were previously conditioned to the appropriate salinities. Water temperature varied from 28°C to 35 C. Oxygen readings varied from 4.2 to 4.7 ppm. Mortalities were recorded every 12 hr. The experiment was terminated after 60 hr.

Results and Discussion

Bangus exhibit a high tolerance for malachite green. Survivals in the 4 bags at the highest concentration of 1.6 ppm were 100, 100, 80 and 60%, respectively, after 60 hr. Significant mortalities were not obtained at lower concentrations of malachite green (Table 4.05).

Table 4.05. Bioassay of Malachite Green

Salinity (ppt)	Concentration (ppm)	Fish remaining alive after hours				
		12	24	36	48	60
15	0.1	5				
30	0.1	5				
15	0.2	5				
	0.2	5				
30	0.2	5				
	0.2	5				4
15	0.4	5				
	0.4	5				
30	0.4	5				
	0.4	5				
15	0.8	5				
	0.8	5				
30	0.8	5				
	0.8	5				
15	1.6	5			4	
	1.6	5				
30	1.6	5	3			
	1.6	5				
15	Control	5				
30	Control	5				

Potassium Permanganate (Crystal)

Introduction

Potassium permanganate is a strong oxidizing agent, effective in controlling certain protozoa, fungi, monogenetic trematodes and parasitic crustacean on fish. The objective of this experiment was to determine tolerance levels of bangus for potassium permanganate under defined conditions.

Methods and Materials

Four concentrations of potassium permanganate were tested at 15 ppt salinity, with controls and one replication. The concentrations tested, based upon commercial formulation, and expressed as parts per million (ppm), were 4.0, 8.0, 16.0 and 25.0. Plastic bags were utilized. Each bag was filled with 16 liters of well water, and the salinity adjusted with solar salt. Each bag was stocked with five bangus fingerlings averaging approximately 8 g each. Water temperature was constant at 27.3 C. The experiment was terminated after 32 hr.

Results and Discussion

At 4 ppm no kills were obtained; at 8 ppm four bangus survived; at 16 ppm a total kill was obtained within 2 hr; at 25 ppm a total kill was obtained within 1 hr.

6. Backyard Fish Culture (Hito)

This investigation tested very small ponds, particularly for hito, that might lend themselves for family adoption in some sort of backyard culture. Two ponds 2.0 x 1.5 m and one pond 2.0 x 1.8 m were used for these trials.

One pond, 2.0 x 1.8 m, was located at Diliman, Quezon City. The pond was stocked with hito receiving table scraps as feed as described in the last report. A sample of 40 fish on August 10 (culture day 133) had fish averaging 54.1 g. This represents a standing crop of about 5.5 kg (1.5 kg/m^2) and a

net production of about 2.6 kg (0.7 kg/m^2) assuming 100% survival of the 102 fish counted on July 1. The previous June 23 the fish already averaged 49.8 g so it was concluded fish had stopped growing. Continued flooding by heavy rains caused the experiment to be discontinued without further sampling.

Small pond trials and feedstuff screening work has been shifted to the Freshwater Station. Generally, the high cost and poor utilization of feeds has made the use of backyard ponds for hito seem impractical. In these tests fish growth was not good nor was production enough to justify small pond construction. There were also problems from diseases and flooding plus the bad odor and safety hazzard from the ponds in residential areas.

7. Screening of Feedstuffs: Laboratory Trials with Hito

Introduction

With intensive fish culture, fish are given special feed to increase production. However, the feed must cost less than the value of the fish which are produced. Hito are potentially excellent fish to receive feed because of their high market price and high pollution tolerance. To date, little is known about the expected return using various locally available materials such as farm crops, trash fish, shrimp and chicken manure. This experiment is to screen by laboratory tests the effect of various feed materials on hito growth. The information will assist in formulating feed composition and to discourage the use of poor materials.

Methods and Materials

Seven experimental diets, cooked rice middlings ("binlid"), wet paste of rice bran, cooked mongo beans, ground trash fish, moistened dried freshwater shrimps, chicken manure and a 1:1 combination of the previous six feeds, were tested on hito fingerlings. The raw materials were bought from San Jose market, Nueva Ecija. To increase feed water stability, the feed was processed to pelleted form in the Freshwater Station laboratory using 10% powdered "ipil-ipil" leaves (*Leucaena sp.*) as a binder.

Daily ration was given in paste form from November 23 to December 5 at 10% of body weight and in pelleted form from December 6 to December 31 at 5% of total body weight basis. Unconsumed food was siphoned out everyday from November 24 to December 12 only. Fish mortality was rather high so it was decided not to disturb the fish with food siphoning after December 12.

Three aquaria with seven fish for every aquarium were used for each of the seven experimental diets. A total of 147 hito fingerlings subjected to this feeding trials were donated by the Institute of Fisheries Development and Research. As preventive control of external parasites, the fingerlings averaging about 2 g each were given three series of 400 ppm formalin bath 12 hr after arrival at the Freshwater Station. The baths were separated by 15 min recovery time. Before the feeding experiment, the fish were held in 60-l aquaria at 49 fish per aquarium and were given sustenance feeding composed of chopped hard boiled chicken eggs from October 21 to November 1 and with IFDR feed ("dilis") 65%, wheat flour 10%, powdered "ipil-ipil leaves 23%, and Vigal vitamin premix 2%) from November 2 to November 22.

Results and Discussion

Results of the feeding trials are presented in Table 6.01. The experiment was originally designed for 63 days. However, it was terminated after 36 days because of mortalities and no apparent growth in fish. Mortality occurred when aquaria cleaning was done and diminished when cleaning was stopped. Though survival and growth were bad with all experimental feeds, the feeds with animal products gave slightly better result. Of the fish that survived, those which were given feeds containing animal material gained 9.5 mg/fish/day on the average while fish receiving only plant materials and the chicken manure diet lost 17.25 mg/fish/day on the average.

Additional laboratory trials with hito to further test feedstuffs are planned.

Table 6.01. Summary of results of 36-day feeding trials with hito using different feedstuffs in the Freshwater Station from November 23 to December 31.

Aquaria No.	Treatment	No. of fish		Ave. wt. of fish (g)		Weight difference (g)	Total feed given (g)
		Stock	Survival	Culture 0	day 40		
1A	Trash fish	7	7	1.4	1.8	+0.4	25.5
B	Trash fish	7	7	7.0	7.6	+0.6	125.8
C	Trash fish	7	3	2.2	2.4	+0.2	22.5
2A	Rice bran	7	1*	2.3	-	-	27.2
B	Rice bran	7	5	3.5	2.9	-0.6	51.0
C	Rice bran	7	8*	3.3	2.2	-1.1	57.8
3A	Mongo	7	0	3.0	-	-	34.9
B	Mongo	7	7	4.6	4.6	0	81.6
C	Mongo	7	7	4.5	3.5	-1.0	80.6
4A	Shrimp	7	5	2.4	2.6	+0.2	39.0
B	Shrimp	7	0	5.8	-	-	69.7
C	Shrimp	7	0	1.4	-	-	13.0
5A	Chicken manure	7	5	1.4	1.1	-0.3	23.8
B	Chicken manure	7	7	4.4	3.4	-1.0	78.2
C	Chicken manure	7	0	1.4	-	-	14.0
6A	Rice middlings	7	1**	1.7	-	-	17.1
B	Rice middlings	7	4	2.8	2.4	-0.4	40.2
C	Rice middlings	7	8**	1.6	1.4	-0.4	28.7
7A	1:1 combination	7	7	1.7	1.7	0	31.5
B	1:1 combination	7	7	1.7	2.0	+0.3	31.5
C	1:1 combination	7	3	1.5	2.1	+0.6	21.9

&

*Eight fish survived because 2A fish is transferred to 2C.
**Eight fish survived because 6A fish is transferred to 6C.

B. Research in-Progress

1. Length-Weight Studies

Analysis on 6,304 milkfish continues. We are working to improve the computer readout to put the data in the most easily understood form. Tentative results are presented in the Fish Culture Leaflet 4 included elsewhere in the report.

Data from other species are being accumulated and will be analyzed in the near future.

2. Survey of Parasites and Bacterial Diseases of Bangus

The following is a continuation of the survey of parasites and diseases of bangus first reported in IFP Technical Report No. 3.

Parasites:

Seventy-seven bangus fry obtained from Iloilo fry dealers were examined for parasitism. They ranged from 13 to 14 mm in length and 4 to 6 mg in weight. Four fry had two, two, one and one larval monogenetic trematodes, respectively, attached to the caudal fin; one fry had two digenetic trematode metacercariae encysted in the body cavity just posterior to the gall bladder; one fry had one isopod attached to the body; two fry had apparent fungus infections; one fry had two unidentified encysted parasites attached to the anal fin; many fry had unidentified stalked protozoa attached to the body.

Forty-two post-fry ranging from 25 to 63.7 mm in length and 0.104 to 2.9 g in weight were obtained from IFP nursery and acclimation ponds at Western Visayas Demonstration Fish Farm (WVDFF), and examined for ectoparasites. The gills of thirty fish, distributed over the entire size range, were infected with Trichodina. Ten fish were heavily infected, nine moderately infected and eleven lightly infected. In all cases the parasites were observed actively feeding upon gill epithelium or its secretions.

Seventy-five fish from IFP nursery ponds at WVDFF were

examined and eye abnormalities noted. They averaged 26.4 to 68 mm in length and 0.155 g in weight. Two fish had constricted pupils of the right eye, and two had constricted pupils of the left eye.

Ten stunted fingerlings, 50 to 68 mm in length, were obtained from a nursery pond of a cooperator and examined for ectoparasites. The gills of all fish were heavily infected with encysted, parasitic dinoflagellates; the skin and fins of two fish had attached dinoflagellates; the gills of two fish were lightly infected with Scyphidia; the gills of six fish, and skin and fins of one fish, were infected by Trichodina. While there was no apparent pathology in the above fish, there is the possibility of partial mechanical blockage of respiration by the large numbers of dinoflagellates present on the gills. Six fish, 153 to 207 mm in length were obtained from a rearing pond of the same cooperator. The gills of one were heavily infected, and those of four fish lightly infected with dinoflagellates.

Poeciliid fish (top-minnows) are common inhabitants of bangus ponds, and are thus potential reservoir hosts for parasites and diseases of bangus. Fourteen fish from an IFP pond at WVDFF were examined. The gills of four fish were lightly infected with Trichodina, the gills of two fish were lightly infected with testate amoebae (fam. Difflugiidae), and one fish had a single branchiurid parasite attached to the dorsal fin.

Bacterial diseases:

Fingerlings averaging 9 cm in length and 7 g in weight were harvested from an IFP rearing pond at WVDFF by draining, and transferred to concrete tanks where they were maintained under crowded conditions. After three days disease appeared characterized by partially eroded fins and patches of discoloration on the skin. Smears from these lesions and from the kidney and liver contained many long, slender bacterial rods. Gill smears were negative for bacteria, but revealed heavy infections of Trichodina, and light infections of Scyphidia.

Seven dead fish averaging 16.25 cm in length and 42.4 g in weight were recovered from IFP rearing pond no. 6 at WVDFF just

after the water had turned yellowish-brown in color. The fish had mild congestion of the fins and belly. Liver and kidney smears contained gram-positive, long, slender bacterial rods. Gill smears contained various gram-negative and gram-positive bacterial rods; none, however, resembling those from the kidney and liver.

The above observations in addition to numerous other observations reported by Inland Fisheries Project personnel, Bureau of Fisheries personnel and private fish pond and fish pen operators, suggest that systemic bacterial disease of bangus, particularly of fingerlings, is the cause of substantial losses. In so far as most losses of fingerlings attributable to bacterial disease occur during transit or shortly after stocking in ponds or pens, it would appear that physiological stress caused by improper handling is the predisposing factor.

Preliminary experiments were conducted as part of an effort to define the conditions under which bacterial disease appears. Typical external signs of the disease are brownish or grayish, patchy, discoloration of the skin, and frayed fins. Internal signs are the presence of slender rods, 3.6 to 9.3 micrometers long, in smears taken from the kidney and liver. Three plastic bags containing 16 liters of water each, at 15 ppt salinity, were stocked with 30, 20 and 10 fingerlings averaging 7.1 g each, and free of external signs of bacterial disease. The fish were handled twice in catching from a pond and placing in the bags; temperature remained constant at 28 C ; pH fluctuated from 7.7 to 8.6 ; oxygen tension was maintained at 7.6 ppm by pump aeration; carbon dioxide remained constant at 0 ppm. During the experiment the water became dark and developed a strong odor. At the end of 24 hours fish from all three bags were examined. Bag containing 30 fish: Eight fish were dead, all with severely frayed fins and extensive patches of discoloration on the dorsal portion of the body. Many bacterial rods were present in smears from the kidney and liver (usually more abundant in the kidney), and very few bacteria were present in smears from the fins, gills and skin lesions. Sixteen of the surviving fish had slightly frayed fins and no skin discoloration. Many bacteria were present

in kidney smears. The remaining fish showed no external signs of disease. Bag containing 20 fish: Two fish were dead, both with severely frayed fins and skin discoloration. Bacteria were present in kidney and liver smears. Surviving fish had slightly frayed fins, no skin discoloration, and bacteria were present in kidney and liver smears. Bag containing 10 fish: No fish were dead; however, all fish possessed slightly frayed fins and bacteria were present in kidney and liver smears.

Several unsuccessful attempts were made to isolate and culture the bacterium by aseptically inoculating infected kidney tissue onto nutrient agar and the solid medium of Anacker and Ordal to which one-percent sodium chloride had been added, and incubating at room temperature.

With the completion of the laboratory of the IFP freshwater station adequate facilities are now available for investigation of bacterial diseases. Efforts in the near future will be directed towards precisely defining the conditions under which bacterial diseases occur, and developing preventive and therapeutic countermeasures.

3. Milkfish Production in Freshwater Ponds With Different Fertilizer Systems

Much has been done on milkfish culture in salt and brackish-water fishponds with success in increasing the production by using such technique as pond fertilization, growing the right kind of natural food and stock manipulation. Yet little is known about freshwater production levels or techniques.

This study is seeking information on the culture of milkfish in freshwater fishponds. If freshwater milkfish culture is practical then rural areas could produce their own milkfish locally.

Eighteen 1,000-m^2 earthen ponds at the Freshwater Station will be used in this study. Each pond is independent from the others in water supply and drainage. Water level will be maintained at 75 cm. average depth. Six different fertilizer treatments (Table 3.01)

are scheduled for the ponds with three replicates for each treatment. Acclimatized milkfish fingerlings will be stocked at 3000/ha.

Table 3.01 - Different fertilizer treatments in milkfish experimental ponds at Freshwater Station

Treatment	Day			
	-15	-3	0	+3
A. Control	-	-	-	-
B. Chicken manure	2,000 kg/ha	-	-	-
C. 45-0-0	-	In solution 20 kg/ha	-	In platform* 20 kg/ha
D. 0-20-0	-	In solution 50 kg/ha	-	In platform* 50 kg/ha
E. 16-20-0	-	In solution 50 kg/ha	-	In platform* 50 kg/ha
F. Chicken manure	2,000 kg/ha	-	-	-
8-20-0	-	In solution 50 kg/ha	-	In platform 50 kg/ha

* Successive treatment of fertilizers shall be made if neccessary to maintain good plankton growth.

The experiment will continue until carrying capacity is reached in the ponds. Water chemistry (O_2, CO_2, pH), water visibility and temperature will be checked regularly and as circumstances may warrant. An attempt will be made to quantify various plankton components in the ponds which may possibly lead to the development of proper quantitative analysis techniques.

Efforts to secure fish stocks during the past months have had limited success. The Bureau of Fisheries, Dagupan, has contributed post fingerlings but transfer of the fish to the Freshwater Station has resulted in high mortalities. A total of 17,800 fish were received but only 2,470 fish survived to Dec. 31. Because of the low number of stocks available only eight ponds with four treatments and two replicates will be started early in January. The treatments

Table 4.01. Amounts and dates of applications of fertilizers in pond trials of hito at the Freshwater Station, CLSU, Muñoz, Nueva Ecija

Treatment	Pond no.	Date	Culture day	16-20-0 applied kg/ha Total	N	P_2O_5	Chicken manure kg/ha	0-20-0 Total	P_2O_5
Chicken manure	5E & 5G	Oct. 23	-13	-	-	-	2,000	-	-
		Nov. 5	-1	-	-	-	-	-	-
		Nov. 15	9	-	-	-	500	-	-
		Dec. 4	28	-	-	-	500	-	-
		Dec. 23	47	-	-	-	500	-	-
			Total				500		
16-20-0	6D & 6F	Oct. 23	-13	45.0	7.2	9.0	-	-	-
		Nov. 5	-1	45.0	7.2	9.0	-	-	-
		Nov. 15	9	26.0	4.2	5.2	-	36.0	7.2
		Dec. 4	28	45.0	7.2	9.0	-	-	-
		Dec. 23	47	45.0	7.2	9.0	-	-	-
			Total	206.0	33.2	41.2	-	36.0	7.2
16-20-0 and Chicken manure	6E and 6G	Oct. 23	-13	-	-	-	1,000	-	-
		Nov. 5	-1	45.0	7.2	9.0	-	-	-
		Nov. 15	9	26.0	4.2	5.2	-	36.0	7.2
		Dec. 4	28	45.0	7.2	9.0	-	-	-
		Dec. 23	47	45.0	7.2	9.0	-	-	-
			Total	161.0	25.8	32.2	-	36.0	7.2

Table 4.02. Estimated weights and gains for hito in 500-m^2 experimental ponds from November 6 through December 18 at the Freshwater Station.

Fertilizer treatment	Pond no.	No. of fish		Culture day		Net gain		Production	
		Stocked	Sampled	0 Mean wt. (g)	42 Mean wt. (g)	(g)	(g)/fish/day	Total (kg/ha)	Net)kg/ha)
Control	5D	90	16	2.3	16.7	14.4	0.3	30.1	25.9
	5F	90	11	2.3	10.2	7.9	0.2	18.4	14.2
	Average	90	14	2.3	13.4	11.3	0.2	24.2	20.0
Chicken manure	5E	90	15	2.3	36.5	34.2	0.8	67.7	61.6
	5G	90	15	2.3	36.2	33.9	0.8	65.2	61.0
	Average	90	15	2.3	36.4	34.0	0.8	65.5	61.3
16-20-0	6D	90	15	2.3	30.5	28.2	0.7	54.9	50.8
	6F	90	13	2.3	35.1	32.8	0.8	63.1	59.0
	Average	90	14	2.3	32.8	30.5	0.8	59.0	54.9
16-20-0 and Chicken manure	6E	90	15	2.3	31.3	29.0	0.7	56.3	52.2
	6G	90	15	2.3	28.8	26.5	0.6	51.8	47.9
	Average	90	15	2.3	30.0	27.8	0.7	54.0	50.0
Average all ponds		90	14	2.3	28.6	25.9	0.6	50.7	46.6

will be Control, Chicken manure, Chicken manure and 16-20-0 and 8-20-0 fertilization. When milkfish fry become available later in 1974 the trials will be conducted as described. By then the results from the first eight ponds should be available. It is apparent that milkfish of advanced fingerlings size and larger are particularly sensitive when handled in freshwater.

4. Basic Production and Effects of Different Fertilizers on the Culture of Hito

Hito culture has become popular recently in the Philippines. Yet little is known about production levels in unfed ponds or what effect such techniques as fertilization will have on production. Such information is necessary if cost-return evaluations of hito raising are to be made. Also, future stocking rates will be based on expected production. This study at the Freshwater Station is to determine the effect of fertilizers on the natural production of hito.

Eight new 500-m^2 ponds are being used in these trials, two ponds are for each of four treatments. Treatments are no fertilizer, chicken manure fertilization, fertilization with inorganic 16-20-0, and combination 16-20-0 and chicken manure fertilization.

Preparations started when all ponds were drained from Oct. 18 through Oct. 23. On Oct. 24, initial fertilizer applications were made and water was admitted to a depth of 10 cm. Fertilizers were again applied on Nov. 5 to complete treatments prior to stocking. These and subsequent applications of fertilizers were made at dates and amounts given in Table 4.01. Later applications will be made at bi-weekly intervals if water visibility is more than 40 cm.

Hito fingerlings averaging 2.3 g, donated by the IFDR, were stocked on Nov. 6 at the rate of 1,800/ha.

Prior to stocking fish were treated with formalin solution bath as a precaution against external disease-organisms.

Water in untreated ponds has always been clear. Fertilized ponds showed variation in water color; brown in ponds treated with chicken manure, milky in 16-20-0 treated ponds, and greenish-brown in chicken manure-16-20-0 treated ponds.

Fish are being sampled every 42nd day of culture. The experiment will continue until March. Data from the first sampling on December 18 is presented in Table 4.02. Ponds were partially drained to facilitate speedy sampling. Based on sampling data fertilization appear to give much higher production.

5. Basic Production and Effects of Different Fertilizer on the Culture of Common Carp

This experiment is to determine the rate of growth and carrying capacity of common carp, Cyprinus carpio, in ponds with and without fertilization. Such information should be useful to guide fish farmers in their production estimates and stocking rates. Different fertilizer systems will be used to see if one system is better than another according to economics of production.

Eight new 500-m^2 ponds are used in these trials. Two ponds are used for each of four treatments as follows:

Treatment	Pond No.	Rates of Fertilization
Control	4I, 5H	No fertilization
Organic fertilizer	4H, 5I	2,000 kg/ha chicken manure, initial application. 500 kg/ha chicken manure every two weeks unless the dissolved O_2 becomes low.
Inorganic fertilizer	6H,6J	45 kg/ha 16-20-0 broadcasted before filling with water. 45 kg/ha 16-20-0 before stocking. Subsequent application of 16-20-0 at 45 kg/ha on platforms unless water visibility is less than 40 cm.
Combined fertilizer	6I, 6K	1,000 kg/ha chicken manure before stocking and 45 kg/ha 16-20-0 every two weeks unless water visibility is less than 40 cm.

All ponds were drained from Dec. 4 through Dec. 6. The fertilizers were spread over the pond bottoms on Dec. 7. Water was admitted to a depth of 40 cm until Dec. 24 when the ponds received their second application of inorganic fertilizer. Water level was further increased to 60 cm. Once water was in the ponds applications of chicken manure were broadcast and 16-20-0 was placed on platforms. Table 5.01 shows the amounts and dates of applications for fertilizer to Dec. 31.

Prior to stocking, the fingerlings were treated with 25 ppm formaldehyde solution for a period of 24 hr for preventive control of ectoparasites. Stocking was on Dec, 13. Each pond received 50 fingerlings which is a stocking rate of 1,000/ha. A random sample of 40 fish gave the average weight of 2.7 g at time of stocking.

The stocks will be sampled each month and the study will terminate as soon as it appears carrying capacity has been reached in the fertilized ponds.

Table 5.01 - Amounts and dates of application of fertilizers from Dec. 7 to Dec. 31 in common carp pond trials.

Pond no.	Date	Culture day	16-20-0 Fertilizer applied (kg/ha)			Chicken manure (kg/ha)
			Total	N	P_2O_5	
4H, 5I	Dec. 7-8	-5 to -4	-	-	-	2,000
	Dec. 13	0	-	-	-	-
	Dec. 24	11	-	-	-	500
	Total					2,500
6H, 6J	Dec. 7-8	-5 to -4	90	14.40	18.0	-
	Dec. 13	0	-	-	-	-
	Dec. 24	11	45	7.20	9.0	-
	Total		135	21.60	27.0	-
6I, 6K	Dec. 7-8	-5 to -4	45	7.20	9.0	1,000
	Dec. 13	0	-	-	-	-
	Dec. 24	11	45	7.20	9.0	-
	Total		90	14.40	18.0	1,000

Table 5.02 - Water visibility and color in common carp ponds at Freshwater Station, Dec. 24.

Treatment	Pond no.	Secchi visibility (cm)	Water color
Control	4I	24.5	Milky
	5H	52.5	Milky
	Average	38.5	
Organic fertilizer	4H	25.0	Brownish
	5I	27.0	Yellowish brown
	Average	26.0	
Inorganic fertilizer	6H	22.0	Brownish
	6J	40.0	Yellowish brown
	Average	31.0	
Combined fertilizer	6I	21.5	Brownish green
	6K	25.0	Brownish green
	Average	23.2	

6. Carp Polyculture in Fertilized and Unfertilized Ponds

The combination of different fish species in a pond at the same time is one way to increase fish production because the different species utilize different types of food available in the pond. Different species of carp show particular promise for use in such polyculture systems. This experiment in the newly constructed ponds of the Freshwater Station was designed to learn what production could be expected from combined carp culture in ponds with and without the use of fertilizer. Such information should be useful in predicting yields from other ponds and guiding management practices like stocking rate, time of culture and usefulness of fertilizers. This experiment combines the plankton feeding silver carp, *Hypophthalmichthys molitrix*, the omnivorous and benthic feeding common carp, *Cyprinus carpio*, and the herbivorous rohu carp, *Labeo rohita*.

Eight ponds are being used: four 500-m^2 and four 1,000-m^2 ponds. Two 500-m^2 and two 1,000-m^2 ponds have each received combined organic-inorganic fertilizer treatment. The other four ponds are being used as controls and have received no fertilizers.

All ponds were allowed to dry from October 17 through October 23. Water was admitted in all the ponds on October 24 to a depth of about 0.75 m. The fertilization program is summarized in Table 6.01.

All the ponds were stocked on November 14 with mixed species (Silver, Rohu, Common) carp fingerlings at the stocking density of 1,450 fish/ha. The fingerlings were donated by the Bureau of Fisheries, Tanay, Rizal. As a preventive measure against ectoparasites, the fingerlings were given a formalin bath (15 ppm for 36 hr) upon arrival at the station. The fish were individually counted and stocked into designated ponds. A total of 28 fish of each species were sampled at ramdom, measured and weighed prior to stocking.

With the aid of a Secchi disk, water transparency is being checked regularly to indicate density of plankton. Ponds showing

visibility of more than 40 cm will get additional fertilizer. The experiment will continue until fish growth stops.

Tables 6.02 and 6.03 give the details of stocking and estimated production for each of the eight ponds based on the sampling on Dec. 15-16 (culture days 30-31) and assuming a 100% survival. The fertilized ponds had an estimated average net production of 116.5 kg/ha which is 6.3 times the average rate obtained in four control ponds at 18.6 kg/ha. The fertilized ponds received fertilizers costing ₱176.20/ha with an average net production of 97.9 kg/ha in excess over unfertilized ponds. So far, ₱1.80 was spent for fertilizers to produce one kilogram of fish.

Half of the control ponds will be fertilized if fish are not growing after the second stock sampling on January 15, 1974, to see if increased fish growth will result.

Table 6.01 - Application of fertilizer in four carp polyculture ponds.

Date	Culture day	Fertilizer applied (kg/ha)*		
		Chicken manure	16-20-0	0-20-0
Oct. 31	-15	1,000	-	-
Nov. 10	-3	-	65.0	45.0
Nov. 19	5	-	20.0	45.0
Dec. 3	19	-	22.5	-
Dec. 10	26	-	45.0	-
	Total	1,000	152.5	90.0

*Application made on Oct. 31 and Nov. 10 were broadcasted; all others were on platform.

Table 6.02 - Production of carps in four, new, fertilized ponds (30-31 culture days).

Pond no.	Size of Pond	Species	Stocked No./pond	Stocked Mean wt. (g)	Sampled No./pond	Sampled Mean wt. (g)	Production Total (kg/ha)	Production Net (kg/ha)
2H	1000-m^2	Silver	25	14.5	11	116.1	29.0	25.4
		Rohu	80	5.8	9	39.4	31.5	26.8
		Common	40	4.6	1	92.5	37.0	35.1
		Total	145	24.9	21	248.0	97.5	87.3
3I	1000-m^2	Silver	25	14.5	17	140.1	35.0	31.4
		Rohu	80	5.8	4	48.5	38.8	34.2
		Common	40	4.6	1	217.0	86.8	84.9
		Total	145	24.9	22	405.6	160.6	150.5
4J	500-m^2	Silver	10	14.5	5	143.3	28.6	25.8
		Rohu	45	5.8	15	52.9	47.6	42.4
		Common	20	4.6	5	171.5	68.6	66.8
		Total	75	24.9	25	367.7	144.8	135.0
5K	500-m^2	Silver	10	14.5	7	117.2	23.4	20.5
		Rohu	45	5.8	7	39.9	35.9	30.5
		Common	20	4.6	5	109.0	43.6	41.8
		Total	75	24.9	19	266.1	102.9	92.8
All ponds Average		Silver	25/10	14.5	10	129.2	29.0	25.8
		Rohu	80/45	5.8	9	45.2	38.5	33.5
		Common	40/20	4.6	3	147.5	59.0	57.2
		Total	-	-	22	-	126.5	116.5

Table 6.03 - Production of carp in four, new, unfertilized ponds (30-31 culture days).

Pond no.	Size of Pond	Species	Stocked No./pond	Stocked Mean wt. (g)	Sampled No./pond	Sampled Mean wt. (g)	Production Total (kg/ha)	Production Net (kg/ha)
2I	1000-m^2	Silver	25	14.5	15	35.2	8.8	5.2
		Rohu	80	5.8	19	7.2	5.8	1.1
		Common	40	4.6	7	10.4	4.2	2.3
		Total	145	24.9	41	52.8	18.8	8.6
3H	1000-m^2	Silver	25	14.5	19	31.3	7.8	4.2
		Rohu	80	5.8	26	13.6	10.9	6.2
		Common	40	4.6	-	-	-	-
		Total	145	24.9	45	44.9	18.7	10.4
4K	500-m^2	Silver	10	14.5	10	26.1	5.2	2.3
		Rohu	45	5.8	21	15.7	14.1	8.9
		Common	20	4.6	3	41.6	16.6	14.8
		Total	75	24.9	34	83.4	35.9	26.0
5J	500-m^2	Silver	10	14.5	9	25.9	5.2	2.3
		Rohu	45	5.8	17	19.4	17.5	12.2
		Common	20	4.6	1	21.9	8.8	6.9
		Total	75	24.9	27	67.2	31.5	21.4
All Ponds Average		Silver	25/10	14.5	13	29.6	6.8	3.5
		Rohu	80/45	5.8	21	14.0	12.1	7.1
		Common	40/20	4.6	3	18.5	7.4	8.0
		Total	-	-	37	-	26.3	18.6

7. Tilapia Production with Biological Control in Fertilized Ponds

Tilapia (Tilapia mossambica) are becoming a more popular fish for the table and in pond cultures in the Philippines. The problem with tilapia culture is the fish reproduce rapidly at such a small size that few fish are able to grow to larger sizes best for marketing. This experiment is being done at the Freshwater Station to determine basic productivity of tilapia in new fertilized ponds which will guide future stocking recommendations and production estimates. The use of more than one fish species with different food habits like tilapia, an omnivore, and dalag, a carnivore, may result in better utilization of available food and higher total fish production.

Six ponds, three 500-m^2, and three 1000-m^2 are being used in these trials. One of each size pond is used for each treatment; control, dalag low density (160/ha) and dalag high density (320/ha). All treatments are to be fertilized with the same fertilizers: chicken manure at the rate of 2,000 kg/ha and 16-20-0 fertilizer at 50 kg/ha. Subsequent to stocking, 16-20-0 fertilizer is being applied on fertilizer platforms when water visibility is more than 40 cm. Previously, all trial ponds were drained and cleaned of aquatic vegetations from Nov. 9 through 16. After drying the ponds for sometime, initial fertilization of chicken manure was broadcast before water was admitted into the ponds. First application of 16-20-0 fertilizer was applied in solution on November 16.

On November 17, tilapia fingerlings collected from nearby ponds with average weight of 1.6 g were stocked in all experimental ponds at the rate of 8,000 fish/ha. Dalag fingerlings captured with cover pot in adjacent canals with average weight ranging from 10.4 g to 15.3 g were planted on December 5, a time before tilapia reproduce and yet big enough to escape predation. Fertilizer platform was placed in one corner of each pond. On December 18, 16-20-0 fertilizer was added on the platforms. Three hours later most of the fertilizer melted off the platforms.

Periodic sampling of the fish will be made to follow fish growth and reproduction. The experiment will be terminated when it appears that pond carrying capacity has been reached.

8. Rice-fish Culture

Rice and fish have been grown together for centuries. The usual practice has been to admit wild fish with irrigation water and then to harvest whatever fish remain when the fields are dried. However, in recent years the extensive use of toxic insecticides in rice culture has made the simultaneous raising of fish with rice impractical. Very recently the International Rice Research Institute (IRRI) has announced the development of new resistant rice varieties where the use of insecticides will be less important.

A proposal was presented to IRRI by the IFP to jointly test the feasibility of culturing fish together with these new rice varieties. In a meeting with IRRI Director, Dr. Nyles Brady, on Oct. 30 it was agreed to go ahead with test trials. IRRI will supply seeds of the new varieties and technical assistance for the trials to be conducted at the Freshwater Station.

Initial test areas will be about 200-m^2 with 3 to 4 replicas for each treatment. Details of the rice culture technique have been worked out with Dr. Reeshon Feuer of IRRI. Recommendations of the Rodent Research Center, UPLB, for rat control will be followed. Tilapia will be the fish to be tested first. Seedbeds of the new IR26 should be started early in January with rice harvest set for 125 days after sowing. If results look promising the area north of the reservoir at the Freshwater Station could be developed into a more permanent experimental area.

An exploratory trial in 12 rice plots of 200-m^2 each has been started on the farm of Mr. Tirso Jamandre, Jr. in Pototan, Iloilo. The plots were planted on Nov. 15 with a rice variety reputed to be IR1514 which is semi-resistant to common rice pests and diseases. Three plots received no fish and 9 received tilapia. An adjacent area with the same rice was stocked with hito.

9. System of Hito Natural Reproduction

The development of an active hito culture industry requires a large and constant supply of fingerlings. Though several hatcheries have worked with success on induced spawning of mature hito through hormone injections, there are no reports of hatchery activity on hito reproduction without injections. This experiment will see if hito will reproduce in ponds by simulating natural conditions. There is also a question if hito will reproduce year round if given stimuli which may be conducive to spawning such as suitable substratum for egg deposition and partial change of old pond water, or if hito reproduction is seasonal. If reproduction appears to be seasonal, this work will seek ways to overcome the seasonal barriers such as the use of hormone injection to induce gonad maturation.

Four 500-m^2 ponds are being used in this experiment. The ponds were totally drained on September 30 and then eel grass (Vallisneria sp.) which would serve as hito nest was planted. Chicken manure was spread over the pond bottom on October 1 at 2,000 kg/ha and the ponds tilled. On October 24, 16-20-0 was introduced at 50 kg/ha. Two of the four ponds had six pens each placed in the ponds. The pen, 1.5 x 2 m made of fine-meshed nylon screen fitted onto a wooden frame, permitted segregation of individual pairs of hito and facilitated subsequent recapture.

Hito breeders weighing 100 to 220 g each were bought from the Zaragosa area in Nueva Ecija during August to September 1973. Breeders were stocked and given a paste form of supplementary feed (80% trash fish, 20% rice bran) in the holding pond prior to the experiment. On October 25 ten pairs of breeders were stocked in each of the two ponds without pens and three pairs were stocked in each of the pens of the other two ponds. The fish in pens were given supplementary feed after stocking as when they were in the holding pond. Fish in the two pons without pens were not fed.

In the hope to stimulate spawning water level was increased in

all ponds from 30 cm to 50 cm on Nov. 2.

Since hito did not spawn from October 25 to December 12, which is not considered the normal breeding season, another technique is being developed to explore the possibility of hastening egg ripening or maturation by injection with chorionic gonadothropin (CG).

The original two ponds with 6 pens per pond are being used in this experiment. In each pond 3 pens are for the control and the other 3 pens are for the injected fish. On December 12 both ponds was fertilized with 2,000 kg/ha chicken manure to grow natural food.

On December 19 twelve pairs were selected out of the breeders stocked in the pens in the previous natural reproduction experiment and were anesthesized with quinaldine and weighed. Six pairs were injected with 500 IU per kg of fish with CG manufactured by Nutritional Biochemical Corp., Cleveland, U.S.A. Injections were intramuscular for the females and intraperitoneal for the males. The other 6 pairs are being used for the control. Breeders are being given supplemental pelleted feed (80% fish 15% rice bran, 5% cassava flour) at 2% body weight per day.

At sampling on December 27, results of the first injection showed one female had eggs oozing out of her genital pore and the other five had a prominent distention of the belly. No females in the control had shown eggs coming out of their genital pore. There was 100% recovery of the females but 1 male out of 6 was lost which maybe because of escape from the pen.

The second dose of injection was given December 27, with the hope that females will spawn soon. There will be injections sequence following the first injection depending on the need or at an interval of about a week. Subsequent experiments are planned to follow up this work.

C. Research Programmed (January 1 to June 30, 1974)

1. Brackishwater Station (Iloilo)

When the IFP assumed all construction responsibilities of the Brackishwater Station in October, research projects temporarily became second priority in getting construction completed. The emphasis on construction will continue through the next reporting period of January through June; however, because of their high significance to the IFP research objectives, the following research projects will be continued or initiated during the January-to-June period.

a. The rice-fish culture field trials in the private sector will continue as an on-going project as an extension of more detailed research in rice-fish culture being conducted at the Freshwater Station.

b. The project on spawning bangus (Sabalo) will be continued in late April or May along the coast of Iloilo.

c. A research project will be initiated in 500-m^2 ponds at the Brackishwater Station that will consolidate research efforts on comparing lab-lab and plankton and organic and inorganic fertilization on bangus production. A total of 46 ponds will be used in the study. Three trials or cultures will be run in each pond with each lasting about 120 days. The study will consist of 16 treatments:

1- P1 (plankton) without fertilizer.
2- P1 with NP fertilizer (16-20-0).
3- P1 with N (46-0-0).
4- P1 with P (0-20-0).
5- P1 with C (chicken manure).
6- P1 with C plus NP.
7- P1 with C plus N.
8- P1 with C plus P.

9- L (lab-lab) without fertilizer.
10- L with NP.
11- " " N.
12- " " P.
13- " " C.
14- " " C plus NP.
15- " " C " N.
16- " " C " P.

The objective of this research is to conclusively and simultaneously test at least 12 hypotheses in order to develop technology for increased yields at lower per unit costs. Major emphasis in treatment comparisons will be on production and economic considerations. The specific hypotheses to be tested may be condensed to 4 general hypotheses:

1) Plankton is superior to lab-lab for bangus production,
2) Fertilization is superior to non fertilization,
3) Inorganic fertilizers are superior to organic (chicken manure) fertilizers, and
4) Phosphate fertilizer is more beneficial than nitrate fertilizer in bangus ponds having an organic base.

2. Freshwater Station (Nueva Ecija)

On-going experiments will continue. Production trials will be repeated in several ponds to learn if yields change with maturity of the ponds or the season. As soon as bangus fry become available additional work on the freshwater production of bangus will start. New areas will be developed for rice-fish culture trials. Monosex culture of tilapia both in ponds and rice fields will be started when Mr. Rafael Guerrero returns to the station about May 1. Reproduction and feed trials with hito will continue. Hatchery facilities for other species will be planned and constructed as soon as possible. Papers on completed work will be prepared for publishing in a suitable manner.

The technical staff of the Project prepared the following series of fisheries leaflets out of the research data of the Inland Fisheries Project. These leaflets were written for the consumption of the private sectors engaged in the fishpond industry. The distribution of these leaflets to members and guests of the Philippine Federation of Fishfarm Producers, Inc. was done on January 20, 1974 during the Federation's national conference in Quezon City.

1. FISHPOND FERTILIZERS AND FERTILIZATION

Fishpond fertilizers are organic and/or inorganic substances applied to pond waters or soils to stimulate and maintain growth of algae (phytoplankton, lab-lab or lumut). Fertilizers are divided into two general classes: organic and inorganic.

Organic fertilizers - The most common organic fertilizers used in fishponds are animal manures especially chicken manure, but organic materials of other sources are also used. Night soil, rice bran, grass, sewage and composts are examples of organic fertilizers used in ponds in various parts of the world.

Inorganic fertilizers - Inorganic or chemical fertilizers usually contain concentrated amounts of at least one of the three major plant nutrients; nitrogen, phosphorous and potassium. Nitrogen is expressed in the elemental form (N) on a percentage by weight basis. Phosphorous is reported as the oxide of phosphorous (P_2O_5) and is designated in percentage by weight of available phosphoric acid. Potassium is expressed as the percentage by weight of water-soluble oxide of potassium (K_2O).

Percentage figures are grade numbers used to designate many different kinds of mixed (N-P-K) fertilizers. The first figure is always nitrogen (N), the second figure is available phosphate (P_2O_5 and often written only as P) and the third is soluble potash (K_2O or simply K). For example a 18-46-0 grade fertilizer means it contain 18%, 46% and 0%, respectively, of each of the principle nutrients - 18% nitrogen, 46% available phosphoric acid, and 0% available potash. The total amount of major plant nutrients are 64% in the 18-46-0 fertilizer leaving a remainder of 36% carrier or inert material.

Classifications of inorganic fertilizers - There are three general classification of inorganic fertilizers based on the amounts of N-P_2O_5-K_2O they contain.

They are:

1) Single element fertilizers which contain only one fertilizer element; examples are superphosphate (0-20-0), urea (45-0-0 and ammonium sulfate (21-0-0) fertilizers.

2) Incomplete fertilizers that contain two fertilizer elements: examples are monoammonium phosphate (16-20-0) and diammonium phosphate (18-46-0).

3) Complete fertilizers which contain all three major nutrients: N, P_2O_5 and K_2O: an example is 14-14-14.

An element missing from a mixture is designated with "0". For example 16-20-0 means the fertilizer contains 16%N, 20% P_2O_5 and no available K_2O.

Sources of Plant Nutrients - The foods of plants including phytoplankton, lab-lab and lumut are carbon dioxide (CO_2), water and minerals.

Aquatic plants that are the basis of the natural food chain in water obtain CO_2 from the water and not directly from the air. CO_2 supplies the carbon which makes up 50% or more of the dry weight of plants.

Water is the major substance used by aquatic plants. It composes as much as 90% of the total plant weight. Water serves as the nutrient carrier into and within the plant. Aquatic plants obtain much or all of their foods from the pond water because CO_2 and minerals are dissolved in water.

The mineral or inorganic portion of plant foods which aquatic plants require usually compose less than 5% of their total dry weight. However, supplying the minerals that are lacking in sufficient quantities in the environment for plant production is a fundamental part of fishpond management. Fish production per unit area can be increased as much as five fold or more by the proper application of minerals through fertilization. Often phosphorous is the only mineral that must be added to obtain maximum fish production at the fertilization level of management.

Major plant foods:

Available phosphoric acid containing the element phosphorous is the first of three major plant nutrients. It is necessary in plant growth, but is usually present in water and soil in very small amounts - the

lowest level of the three major plant nutrients. Applied soluble phosphates are soon transformed into less soluble and less available forms such as calcium, aluminum and iron phosphates.

Most organic materials used as fertilizers are low in phosphates - less than 0.5% by weight.

The soluble forms of inorganic phosphate fertilizer are usually prepared by treating rock phosphate with sulfuric or phosphoric acid to produce superphosphates. Several grades are used in the fertilizer industry. Normal superphosphate contains 20% P_2O_5. Grades above 40% P_2O_5 are called triple superphosphate. The various ammonium phosphates are produced by the ammoniation of phosphoric acid. Fish farmers may be offered rock phosphate with a high percentage of phosphate as a "bargin" fertilizer. Rock phosphate may contain more than 30% total phosphate, however, available phosphate will likely be less than 5%.

Nitrogen is essential in plant growth. Atmospheric nitrogen, comprising 80% by volume of air and abundant in solution in water, is unavailable as such to most vascular plants despite its abundance. However, in water many blue-green algae, both phytoplanktonic and benthic (lab-lab) forms, have the ability to combine atmospheric nitrogen into protein. Also, certain kinds of bacteria have the nitrogen-fixing ability which means they can utilize dissolved or atmospheric nitrogen. Not only are many primary organisms able to fix free nitrogen, large amounts of available nitrogen are released into water as waste products and as by-products of decomposition.

There is conflicting evidence about the value of nitrogenous fertilizers in fishponds. In most fishponds any added effect of nitrogen fertilization is not proportional to the added cost.

Most organic fertilizer materials contain less than 1.0% available nitrogen.

There are many forms of inorganic nitrogen fertilizers. Perhaps the most common are urea (45-0-0), ammonium and diammonium phosphate, 16-20-0 and 18-46-0, respectively, ammonium nitrate (34-0-0) and ammonium sulfate (21-0-0). Ammonium sulfate should not be used in ponds with acid soils and waters. The desirability of using either urea, ammonium nitrate or ammonium sulfate (any of the single element nitrate fertilizers) is questionable.

Potash (K_2O) is the other major plant food. Although it is one of the essential and major nutrients, it is apparently not a limiting factor in plant production in ponds. It is less likely to be needed as a fertilizer in fish ponds than nitrogenous fertilizers and certainly less needed than phosphorous fertilizers. The most important source of inorganic potash is nitrate of potash (0-0-60) which is also known as potassium chloride. Potassium sulfate (0-0-48) is another source of potash. Both forms are acid forming. Organic manures usually contain less than 0.5% potash by weight.

Secondary plant foods:

Secondary nutrients, although required in much smaller amounts than the major plant foods, are also essential to plant production. All are contained in most organic fertilizers in low amounts. Calcium and magnesium are secondary elements which are often supplied in the form of lime.

Sulfur (S) is the third important secondary nutrient and is usually applied to fishponds only as a carrier of a major element such as with ammonium sulfate. It is a carrier of many forms of major elements. The grade or percent sulfur may or may not be indicated (i.e., ammonium sulfate may be written 21-0-0-24 indicating presence of 24% sulfate).

Minor plant foods: A number of other nutrients are essential in plant production, but are required only in minute quantities. These minor plant foods include boron, copper, iron, manganese, molybdenum, zinc and chlorine. Cobalt and sodium may also be essential minor elements.

Fertilization with organic and inorganic fertilizers:

Organic manures have long been used as fertilizers. However, as fertilizers for algae (phytoplankton, lab-lab or lumut) in fishponds, organic materials are poor. As direct food for zooplankton organisms or feed for fish, organic manures have some value.

The most common organic materials used in fishponds are manures of cattle, pigs and chickens. The following table gives the composition in percent N-P_2O_5-K_2O of manures of those animals*.

*Data modified from Mallete, Althouse and Clagett, 1960. Biochemistry of Plants and Animals. John Wiley and Sons, Inc., New York (Table 11-1, page 271).

Manure	% Composition		
	N	P_2O_5	K_2O
Cattle	0.49	0.07	0.30
Pig	0.49	0.15	0.53
Chicken	1.15	0.41	0.37

The table shows that of the three, chicken manure contains the greatest amount of phosphorous, the major limiting element in fishponds. A 50 kg of 18-46-0 contains 23 kilograms of P_2O_5. To obtain a comparable amount of P_2O_5 in chicken manure would require over 5000 kg of manure. In other words 244 kg chicken manure (1.0 kg P_2O_5) contains phosphate equivalent of 2.2 kg of 18-46-0 (1.0 kg P_2O_5 -- a ratio of 111.1. At a cost of ₱0.07/kg of chicken manure and ₱1.00/kg of 18-46-0 the costs would be ₱17.08 for 244 kg of chicken manure and ₱2.17 for 2.2 kg of 18-46-0 or 7.8 times greater for P_2O_5 in chicken manure than in 18-46-0 fertilizer. The necessity of organic manures in bangus ponds for production of lab-lab has not been established. In new ponds or pond soils with low levels of organic matter, it is likely that organic fertilizers play a part in lab-lab production that inorganic fertilizers alone do not perform. A major reason for this is that lab-lab does not consist of only algae, but is also composed of animal organisms that may feed directly on the organic manures. However, once a lab-lab growth is well established, inorganic fertilizers, and probably just single element phosphate fertilizer, would be able to sustain and replenish lab-lab growth as well as organic manures.

In general, except for bangus ponds with low levels of organic matter, the use of organic fertilizers is not economically sound. The cost of assembling, processing, storing, transporting and applying organic fertilizer is much greater than for inorganic fertilizer in relation to production expected from each.

Other disadvantages of manures are their demand for oxygen, which may be sufficiently great to cause fish kills, and their unpleasantness to handle.

The following table gives a partial listing and relative costs (November, 1973) of some commonly available organic and inorganic fertilizer materials used in fishponds:

Material	Analysis			Approximate Cost(₱)	
	N	P_2O_5	K_2O	Per kg	Per kg P_2O_5
Organic					
Chicken manure	1.15	0.41	0.37	0.07	17.07
Pig manure	0.49	0.15	0.53	0.07	46.67
Rice bran	2.16	1.74	1.82	0.40	22.98
Inorganic					
Monoammonium phosphate	16	20	0	0.65	3.25
Diammonium phosphate	18	46	0	1.00	2.17
Superphosphate	0	20	0	0.38	1.90

Methods and Practices:

The following are the most common methods of fertilizer applications:

Spreading fertilizer evenly over the pond bottom prior to filling is the method employed in bangus cultures where lab-lab is being produced.

Broadcasting fertilizer either dry or in solution relatively even over the pond bottom or water surface is commonly practiced in bangus and other cultures.

Platforms positioned 15 to 20 cm below the water surface are effectively used for fertilizing fishponds with inorganic fertilizers. Water currents distribute the nutrients throughout the ponds. This method requires less labor and less fertilizer than broadcasting. About 0.75 m of platform surface is needed for each hectare of pond (See Fish Culture Leaflet PLATFORM METHOD OF FISHPOND FERTILIZATION).

In considering the type of fertilizer to use, effectiveness of production must be the first consideration. Second consideration should be economics. Other things to consider are availability and degree of difficulty in transporting, handling, storage and application.

The Inland Fisheries Project is presently (November, 1973) recommending the following forms and applications of fertilizers for fishponds:

Fertilizer	Amount Per application	Method and frequency of application Plankton	Lab-lab
18-46-0	22 kg/ha	Apply all applications on a platform	Apply first application by broadcasting and all follow-up applications by broadcasting or on a platform
16-20-0	50 kg/ha	Apply every 14 to 21 days or as needed to keep water visibility between 20 to 30 cm	Apply every 14 to 21 days
Chicken manure	2000 to 2500 kg/ha	Apply only in new ponds or in ponds that have little or no "soft organic mud". Apply by spreading. Use only when preparing pond and use 18-46-0 or 16-20-0 in follow-up applications as recommended above.	

2. PLATFORM METHOD OF FISHPOND FERTILIZATION

The most effective and efficient method for applying inorganic fertilizers to fishponds for producing and maintaining plankton, and perhaps for lab-lab maintenance as well, is the platform method (Fig. 2.01). In principle the fertilizer is placed on a platform positioned about 15 to 20 cm below the pond surface, the nutrients are then released slowly into solution and distributed throughout the pond by water movements. The method has been proven for developing and maintaining plankton, and has been used successfully to a limited extent in maintaining lab-lab growth. The advantages are very significant

1. Platforms save approximately 20 to 40% on the amount of fertilizer required in a fishpond. This is a result of two factors:

   a. The fertilizer goes into solution gradually thus making available nutrients to the plants on a relatively optimum

and continuous basis rather than an excess amount at the time of application and a deficient amount between applications.

b. The fertilizer on a platform is near the surface and separated from the pond soils. Because the nutrients are being released gradually into the water, only minute amounts of the nutrients are lost and made unavailable for phytoplankton or lab-lab production. In contrast, other fertilization methods, such as broadcasting, result in greater loss of nutrients with less amounts available for fish food production.

2. Platforms save on labor and labor costs because placing fertilizer on a platform is much easier and less time consuming than applying fertilizer by other methods.

A fertilizer platform is a table-like structure positioned with its surface horizontal beneath the water surface (Fig. 2.02). Wood and bamboo are excellent for constructing platforms although other materials can be used.

Platforms usually have square surfaces with about 0.75 m^2 of platform serving each hectare (Table 2.01). The platforms are positioned so that their surfaces are about 15 to 20 cm below the water surface. In shallow ponds where lab-lab is being grown, platforms may actually rest on the pond bottoms, but in plankton ponds the platforms are fixed in position by sinking their legs into the bottom soils. Platforms should be in conveniently accessible locations, but should not be located in corners, coves or other such areas where they will be shielded from the wind.

Table 2.01 - Suggested platform dimensions for selected pond sizes.

Pond size	Platform dimensions
1 ha	0.85 by 0.85 m
2 ha	1.25 by 1.25 m
3 ha	1.50 by 1.50 m
4 ha	1.70 by 1.70 m
5 ha	1.90 by 1.90 m
6 ha	2.10 by 2.10 m
7 ha	2.25 by 2.25 m

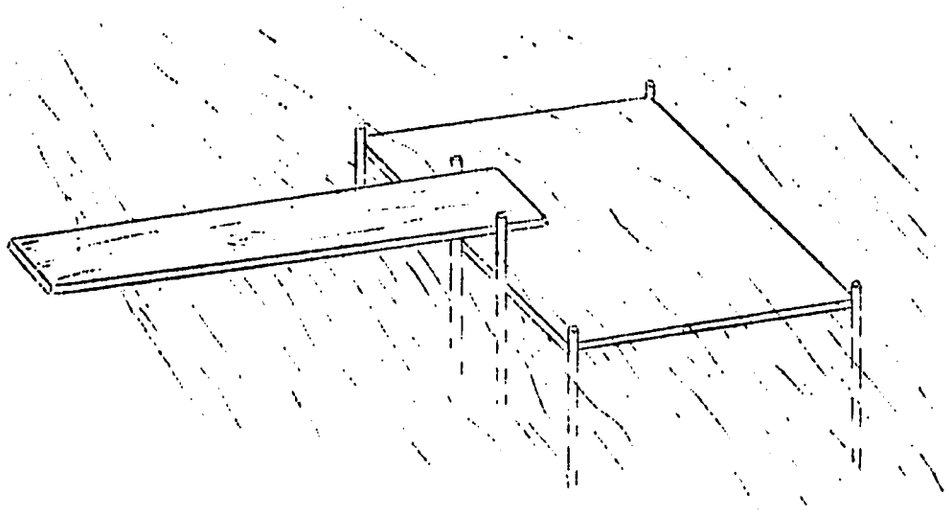

Fig. 2.01 - Fertilizer platform in a fishpond.

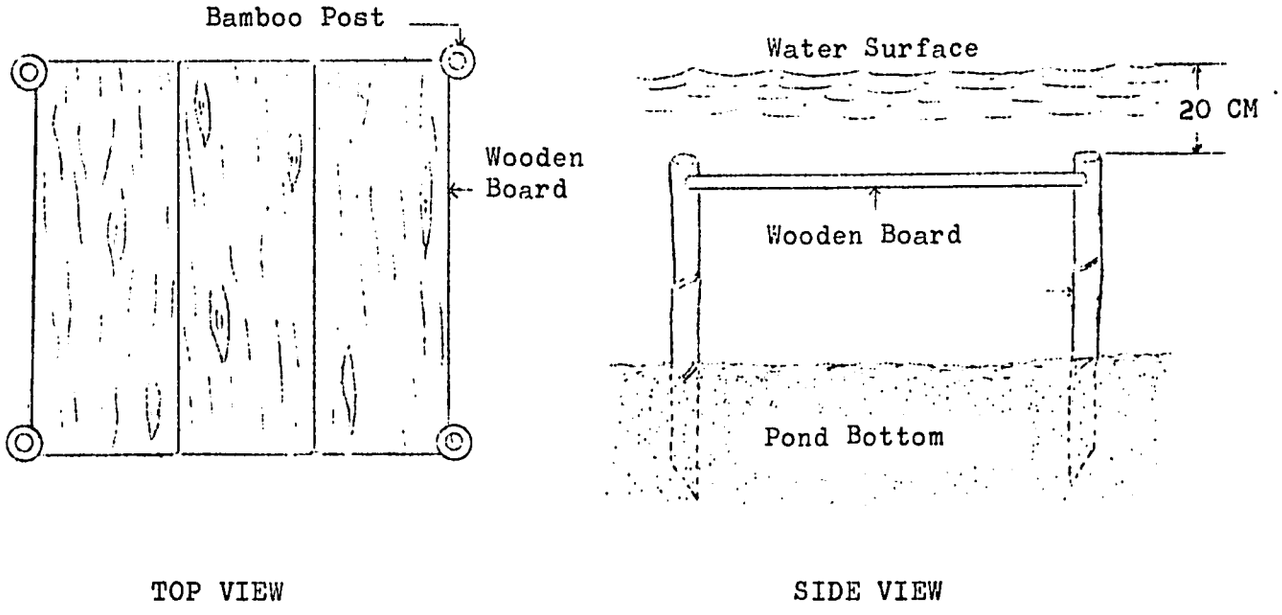

Fig. 2.02 - Top and side views of a fertilizer platform. The side view shows the platform in a fishpond.

One platform is sufficient for each 7 ha plankton pond or each 2½ ha of lab-lab pond. An application of fertilizer is simply poured onto the platform surface and left alone (Fig. 2.03).

3. PLANKTON METHOD FOR RAISING BANGUS

Plankton is a collective term for all the small, suspended organisms that passively drift and float with the tides and currents of fresh and marine waters including ponds. Most planktonic organisms are microscopic and consist of phytoplankton (very small plants) and zooplankton (very small animals). Plankton is an important food for fishes of the world, such as the herrings, sardines and anchovies, feed directly upon plankton. Even the largest of all animals, the whalebone whales, also feed directly upon plankton.

Plankton is, for fish species that can utilize it, the most productive food for fish in ponds. A greater weight of fish can, through direct or indirect consumption, be produced on plankton than on any other type of natural food produced in ponds including lab-lab or lumut. Bangus, tilapia and silver carp are examples of pond fish that can directly utilize plankton. Hito and common carp, in the fingerling stages and larger, cannot utilize plankton directly, but do utilize it indirectly by feeding on other organisms that feed directly or indirectly on the plankton. Pond waters rich in plankton will usually appear green but may be yellow, brown, red or a combination of these colors. Phytoplankton organisms usually give the pond water its color.

Zooplankton organisms are suspended in water with the phytoplankton, but almost always at much lower densities. However, the nutritional value of zooplankton is much greater than for phytoplankton. In fact it is doubtful that even bangus would grow well if it consumed only phytoplankton and not zooplankton organisms.

The Inland Fisheries Project research personnel and the Bureau of Fisheries extension workers have conducted research and field trials on the plankton method of bangus production using the requirements and procedures presented below.

Requirements:

1. <u>Pond water depth</u> of 75 to 100 cm is optimum and a depth of at

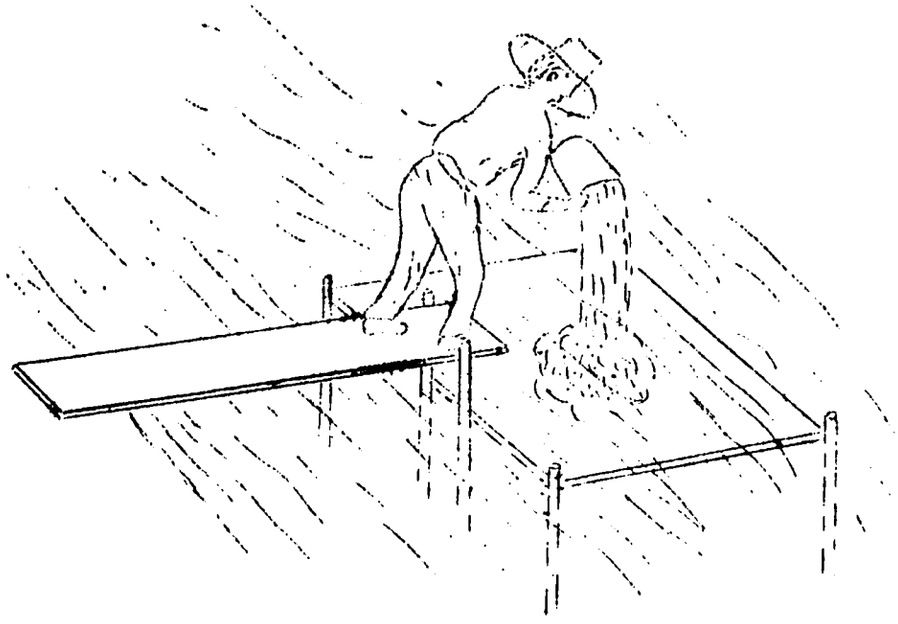

a

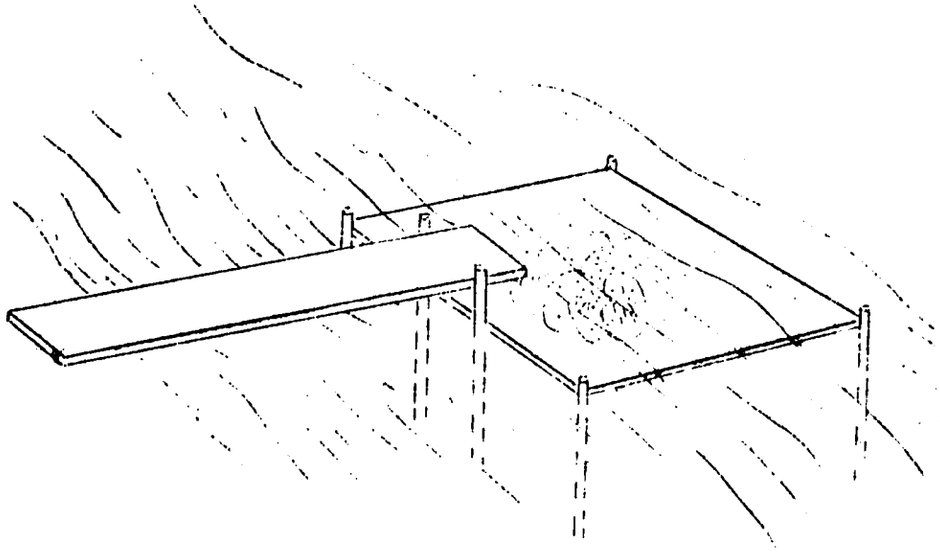

b

Fig. 2.03 - Fertilizer platform in use in a fishpond;
(a) Inorganic fertilizer being applied,
(b) Fertilizer left to "work" alone.

60 cm is required for good production. Depths greater than 150 cm are not recommended.

2. A fertilizer platform is not essential but the platform method of fertilization is more effective and more efficient than other methods of producing plankton in ponds. (See Fish Culture Leaflet, PLATFORM METHOD OF FISHPOND FERTILIZATION).

3. Inorganic fertilizer of 18-46-0 or 16-20-0 is sufficient to produce and maintain a desired plankton growth. Fertilizer is periodically applied as needed to maintain a desirable plankton abundance.

4. Bangus fry or fingerlings will be needed for stocking at a rate of 3,000 to 5,000 per hectare.

Procedures:

1. Allow pond to stand without water for a minimum of 24 hours before filling.

2. Fill pond with water to an average depth of at least 60 cm and preferably 75 to 100 cm.

3. Apply 18-46-0 or 16-20-0 fertilizer on the platform before, during or immediately following pond filling at a rate of 22 kg (slightly less than ½ bag) 18-46-0 or 50 kg (1 bag) 16-20-0 per hectare.

4. Stock pond with 3,000 or 5,000 bangus fry or fingerlings per hectare.

5. Repeat the same fertilization treatment after one week and then as often as necessary to keep water visibility to less than 40 cm. (Water visibility should be about 20 to 30 cm. Visibilities of less than 15 or greater than 40 cm are not desirable.) Plankton abundance is indicated by water color and visibility which is measured by the depth to which a white object can be seen below the water surface. A white plate or similar object is ideal for determining visibility. There is no need to fertilizer within two weeks before harvesting.

The plankton method is applicable in fresh, brackish and seawater ponds.

4. LENGTH-WEIGHT TABLE FOR BANGUS

A fish farmer should keep good records as a guide to the management of his ponds. Pond productions should be measured in terms of the fish weight produced. Though fish are sometimes sold by the piece, the market price fluctuates so much that the amount of income from a fish harvest alone is not a good basis for judging real fish production.

Fish farmers often have difficulty in judging the weight of their fish. Accurate scales for weighing fish are expensive and difficult to use in the field. In place of weighing fish it is sometimes easier to measure the length and estimate the weight based on the length. Figure 4.01 shows a measuring board for fish which can be made from a ruler and boards. Table 4.01 gives the weights for bangus at different lengths. The weights in this table are based on computer analysis of 6,304 measurements made on Philippine cultured bangus during 1972 and 1973. The length used is total length which is measured from the tip of the snout to the end of the longest part of the tail of the fish (Fig. 4.02).

The weights given in the table represent a theoretical average only. Fish from a particular pond might weigh more or less than these theoretical values. With some experience using this table, a fish farmer can learn to judge accurately the weights of fish from their lengths. Of course a particularly fat fish would have a higher weight than a fish of the same length as determined from the table and a slender fish would weigh less.

An average length-weight of several fish is more accurate than the length-weight of a single fish. Lengths should be obtained from a sample of fish taken from the pond at random, not selected fish. The table should be used to find the theoretical weight for each length. For lengths falling between values given in the table, weights can be estimated from the nearest weights. The estimated weights from all the fish measured should be added together and divided by the number of fish measured to give an estimate of the average weight for all fish in the pond.

The following is an example of a practical use of the length-weight table. A farmer wants to know the average weight and general condi-

tion of his bangus which are about half way through the culture period. He follows the following procedures:

1. A number of fish are seined and a sample of 10 fish are separated.
2. Each of the 10 are measured for total length.
3. The lengths are recorded (left column below).
4. The length-weight table is consulted to obtain corresponding weights for each measured length.
5. The weights are recorded (right column below) and added to get a total weight for the 10 fish.
6. The total weight is divided by the number of fish measured (10 fish) to obtain the average weight per fish. The sample length-weights and estimated average weight of fish in the pond are presented in the following table:

Lengths measured	Weights taken from Table
230 mm	102.7 g
224	98.0
243	121.0
232	105.0
235	109.5
228	101.0
239	116.0
230	102.7
240	117.6
228	101.0
Total	1074.5 g
	÷ 10 fish
	107.5 g/fish in the sample and, therefore, in the pond.

The farmer now knows the approximate average weight of the fish in his pond (108 g) and the approximate total weight of all fish in the pond (108 g multiplied by the number of fish stocked). From experience, he can judge by observation whether the bangus are above or below average.

In the case where fish in a pond are judged to weigh less (be thinner) than average, a fish farmer might wish to take action to help the fish grow better. Such action could include:

1. Harvesting the fish and starting the new crop,
2. Adding fertilizer to the pond to stimulate greater natural food production (See Fish Culture Leaflet FISHPOND FERTILIZERS AND FERTILIZATION),
3. Removing some of the fish so there would be more food for the remaining fish, or
4. Adding supplemental feeds to the pond.

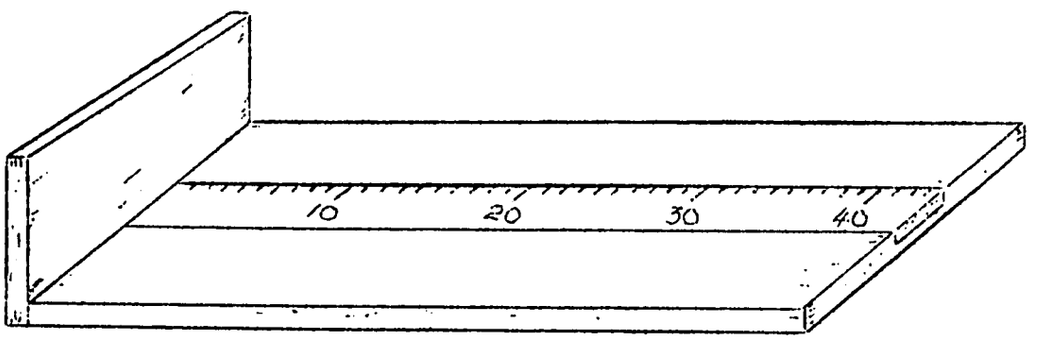

Fig. 4.01 - Fish Measuring Board

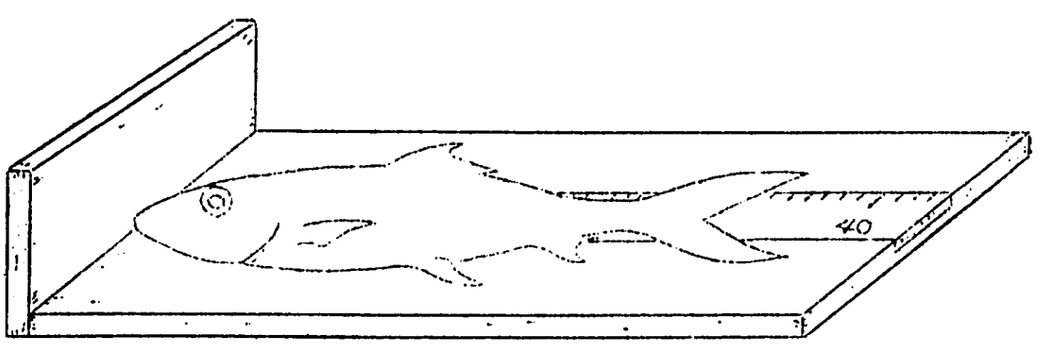

Fig. 4.02 - Bangus being measured

Table 4.01. Total lengths and weights for cultured bangus

Length (mm)	Weight (g)	Length (mm)	Weight (g)	Length (mm)	Weight (g)
80	4.4	190	58.1	300	226.9
85	5.3	195	62.8	305	238.4
90	6.3	200	67.7	310	250.3
100	8.6	210	78.3	320	275.1
105	9.9	215	84.4	325	288.1
110	11.4	220	90.0	330	301.6
115	13.0	225	98.2	335	315.4
120	14.8	230	102.7	340	329.7
125	16.7	235	109.5	345	344.3
130	18.7	240	117.6	350	359.4
135	21.0	245	124.0	355	375.0
140	23.4	250	131.7	360	390.9
145	26.0	255	139.8	365	407.4
150	28.7	260	148.1	370	424.2
155	31.7	265	156.8	375	441.6
160	34.8	270	165.7	380	459.4
165	38.1	275	175.1	385	477.6
170	41.7	280	184.7	390	496.4
175	45.5	285	194.8	395	515.6
180	49.5	290	205.1	400	535.3
185	53.7	295	215.8	-	-

5. BANGUS TRANSFER FROM ONE SALINITY TO ANOTHER

Probably no more than one bangus is harvested for market for every four fry collected along the seashore. Only about 30% to 50% of fry stocked in nursery ponds survive to become fingerlings, and only 60% to 80% of those fingerlings survive to be harvested from the production ponds. This means that if a farmer harvests for market only one bangus out of four fry he purchased for ₱50 per 1,000, that he actually paid ₱200 per 1,000 that survived. A farmer cannot afford to have so few fish survive, especially since prices are steadily going up with a greatly increasing demand for seedlings. This costly loss of seedlings is a serious problem that can be greatly reduced with improved, more careful handling of fry and fingerlings.

Mishandling of fish causes stress. Stress will often result directly or indirectly in death. Even very slight levels of stress may result in retarded growth, There are many ways fish are mishandled and many causes of stress. One of the most common examples is transferring fish from one water to another having a much higher or lower salinity. For example, a transfer of fingerlings from sea water, which is about 35 parts per thousand (ppt) salinity, to water containing 60 ppt will definitely result in stress and will cause some fish to die directly and others may die later from stress-caused problems such as disease. Growth of those fish that survive such stress may be slower than normal.

Methods of determining salinity are presented in Fish Culture Leaflet A SIMPLE SALINOMETER.

Symptoms of Stress

The following are descriptions of various symptoms of stress and shock on bangus:

1. A bangus in stress will break away from the school (group) and swim alone; if all bangus are under stress, they will not be in a school.
2. Swimming behavior of a stressed bangus will usually exhibit one or more of the following characteristics:

   a. Frequent breaking of surface with snout and upper part of back.

   b. Sluggish and weakened swimming.

   c. Body listing to one side indicating difficulty in maintaining equilibrium.

   d. Resting at bottom or at surface with little or no movement and often upside down.

   e. Respiration or "breathing", as indicated by the "pumping" of the gill covers becomes either very strong at an increased rate or very faint.

3. A stressed bangus will often exhibit a pronounced change in body coloration becoming either very dark, light or mottled.

4. Hemorrhages, bloody-red patches or lines, may appear in the skin, usually occurring at the base of the fins but may occur elsewhere on bangus in stress.

5. The paired fins of bangus in stress may become fully extended and stiffened.

The above symptoms of stress on bangus could result from one or more of many causes including transfer to a water of different salinity. When such symptoms are evident steps should be taken to determine the cause and take corrective measures. However, the surest and most effective measure is to avoid letting the fish become stressed in the first place.

How to Avoid Salinity Stress:

Salinity stress resulting from transferring bangus from one water to another can be avoided by following these recommended methods:

A. Preferred Method

1. Determine the salinities of the waters where the fish are contained and where they are to be transferred (See Fish Culture Leaflet A SIMPLE SALINOMETER).

2. Use the table below to determine whether or not a direct transfer would be safe (without stress), stressing or death causing.

Expected results of bangus transfer								
To lower salinity (ppt)					To higher salinity (ppt)			
Sure death	Severe stress/ some death	Stress	Safe (no stress)	From salinity (ppt)	Safe (no stress)	Stress	Severe stress/ some death	Sure death
-	-	-	0-5	0-5	0-20	21-30	31-40	41+
-	-	-	0-10	6-10	6-30	31-40	41-50	51+
-	-	-	0-20	11-20	11-40	41-50	51-55	56+
-	-	-	0-30	21-30	21-45	46-55	56-60	61+
-	-	0-4	5-40	31-40	31-50	51-60	61-65	66+
-	0-9	10-19	20-50	41-50	41-60	61-65	66-70	71+
0-4	5-19	20-34	35-60	51-60	51-65	66-70	71-75	76+
0-9	10-39	40-49	50-70	61-70	61-70	71-75	76-80	81+

Examples in the use of the preceding table:

a. The water where the fish are contained is fresh (0 ppt) or no greater than 5 ppt and the water where they are being transferred is 30 ppt. The table shows that a transfer "From salinity" of 0-5 ppt "To higher salinity" of 30 (21-30) ppt would result in "Stress".

b. The water where the fish are contained is 65 ppt and the water where they are being transferred is 53 ppt. The table shows that a transfer "From salinity" of 65 (61-70) ppt "To lower salinity" of 53 (50-70) ppt would be "safe (no stress)".

c. The water where the fish are contained is 15 ppt and the water where they are being transferred is 70 ppt. The table shows that a transfer "From salinity" of 15 (11-20) ppt "To higher salinity" of 70 (56+ or above 56) ppt would likely result in "Sure death".

3. If a salinity difference between where the fish are being held and where they are to be stocked is great enough to cause stress or death, then the fish should be acclimated in waters of non-stressing salinities.

Examples of acclimatation in intermediate salinities:

a. In example 2a above fish were to be transferred "From salinity" of 0-5 ppt "To salinity" of 30 ppt but the table showed that a direct transfer would likely result in stress. To avoid possible stress the fish should be held for 4 hours in a 50:50 or half-and-half mixture of the two waters. Half 0 ppt water and half 30 ppt would give water of 15 ppt which would be a "safe" transfer. After 4 hours the fish would be transferred from the 15 ppt salinity water to the 30 ppt salinity water without stress.

b. In example 2c above the fish were to be transferred from 15 ppt salinity water to 70 ppt salinity water. Since such a transfer would likely be lethal ("Sure death") to all fish, acclimatation would be necessary. Unlike in example 3a more than one intermediate salinity would be required. The table shows that a transfer from 15 ppt to 30 ppt is "Safe". After 4 hours in 30 ppt a transfer to 40 ppt would be "Safe". After 4 hours a transfer to 50 ppt would be "Safe". After another 4 hours a transfer to 60 ppt would be safe. After an additional 4 hours a transfer to 65 ppt would be safe. After another 4 hours the final transfer to 70 ppt would be safely accomplished.

A total of 6 transfers and 20 hours would be required to safely acclimate bangus from a water salinity of 15 ppt to 70 ppt:

1st transfer to 30 ppt ---- 4 hours at 30 ppt;
2nd transfer to 40 ppt ---- 4 hours at 40 ppt;
3rd transfer to 50 ppt ---- 4 hours at 50 ppt;
4th transfer to 60 ppt ---- 4 hours at 60 ppt;
5th transfer to 65 ppt ---- 4 hours at 65 ppt;
6th transfer to 70 ppt.

B. Alternate Method

1. When there is no means for determining salinity, transfer 2 to 5 bangus directly to a large bucket or tub containing water from the place where the fish are to be moved.

2. If no symptoms of stress develop on the bangus within 4 hours from the time they were placed in the tub, then it is safe to transfer all the fish to the new location.

3. If symptoms of stress do develop on the bangus in the tub, then repeat test by transferring another 2 to 5 fish to a tub containing a half-and-half mixture of water from where the fish are being transferred with water from where they are to be relocated.

4. Repeat this procedure as many times as necessary until no stress appears.

6. A SIMPLE SALINOMETER

Many fishponds are located along rivers and seacoasts where fresh and salt water mix. These ponds, called brackishwater ponds, need to be managed to keep the salt content of the water from fluctuating too much over a short period of time. Such conditions can be harmful to fish growing in the ponds. For example, high evaporation of pond water during the hot season may make the pond water saltier than seawater. Seawater is about 35 parts per thousand salt. Few fish thrive in water more than 50% saltier than the ocean.

Sudden changes in water salt content also stress fish and can either kill the fish directly or make the fish weak and subject to diseases. Changes in salinity may also kill the fishpond organisms in the water and cause slower fish growth. Some fish which grow in coastal areas such as milkfish and tilapia are tolerant to different amounts of salt in the water provided the change in salinity is gradual (See Fish Culture Leaflet BANGUS TRANSFER FROM ONE SALINITY TO ANOTHER). Other fish are strictly limited to either fresh or salt water.

Fish farmers should be particularly careful when adding new water to ponds so that salt concentrations in the ponds are not changed rapidly. Also when transferring fish from one pond to another care should be taken that the salt concentrations in the two ponds are similar. Failure to recognize the importance of salt concentrations in pond waters may cause fish farmers to lose much money and time.

There are several ways to measure salt in water. Elaborate electric meters are available which cost many hundred pesos and give fine precision. These meters are necessary for scientific determinations but are usually too expensive and heavy for practical use by fish farmers.

A less expensive system is the hydrometer, a sort of calibrated floating tube (Fig. 6.01) which measures the weight or specific gravity of liquids according to how high the tub floats in the liquid. As salt is added to water, the water becomes slightly heavier. As water becomes heavier objects floating in the water are pushed higher out of the water. The hydrometer uses this principle to indicate concentrations. Commercially made hydrometers are available from scientific equipment dealers in Manila costing a minimum of about ₱25.00.

For practical purposes it is also possible for a fish farmer to make his own instrument for measuring salt in water. Figure 6.02 shows how a plain bottle can be made into a simple hydrometer. Any narrow-mouthed bottle that will float when empty may be used. A rigid plastic bottle which will not break under field conditions would be a good choice. The bottle need not be larger than about 100 cc capacity. To make the hydrometer the bottle needs to be corked and fitted with a light stem such as a piece of split bamboo. Enough rocks should be put in the bottle so the stem just floats vertically out of the water when the bottle is placed in freshwater (preferably rainwater). The place where the stem comes out of the water should be marked on the stem. Next the bottle can be floated in seawater. The stem will float higher out of the water because of the salt in the seawater. The new place where the stem comes out of the water should be marked on the stem. Half freshwater and half seawater can be mixed and used to float the bottle and locate a mark on the stem indicating half the salt of seawater. Now the bottle can be floated in the water for which the farmer wishes to know the salt content. The marks on the stem may be used as a reference to judge the approximate amount of salt in the water as compared to seawater and freshwater. Best results are obtained when the temp-

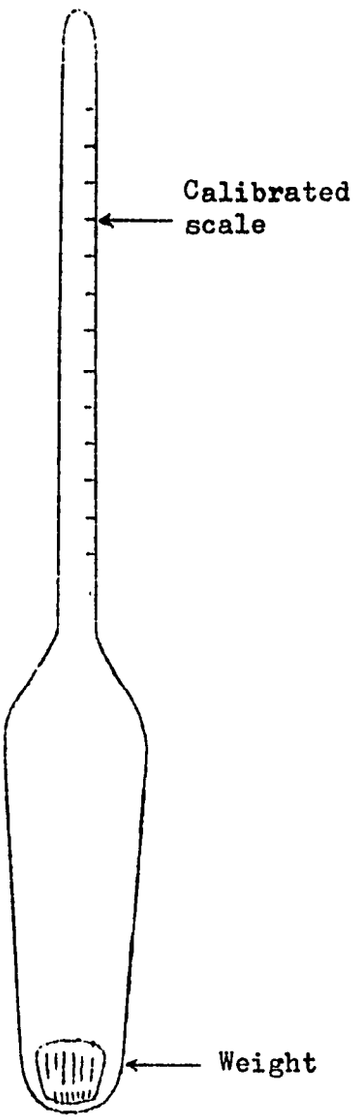

Fig. 6.01 - Hydrometer

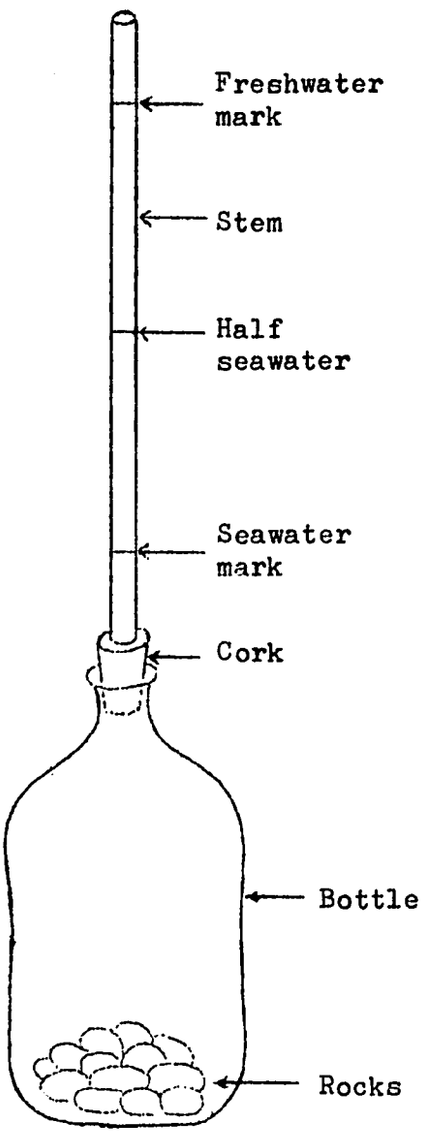

Fig. 6.02 - Improvised hydrometer

erature of the water tested is the same as the water used to make the reference marks.

7. PROBLEMS OF FRESHWATER CATFISH CULTURE

Introduction

The high market value of the local freshwater catfish or hito has interested many people in culturing this fish as a business. Hito are common in most of the freshwaters of the Philippines. There have been reports of successful hito cultures from Thailand and Taiwan where this type of fish is also native. A number of people believe that hito also could be cultured successfully in the Philippines. The system of hito culture as developed in Thailand calls for the stocking of small ponds with a high number of young fish and growing the fish on a feed made mostly from finely ground waste fish. Unfortunately, attempts at culturing hito in the Philippines using this approach are not yet successful. Some of the problems a catfish farmer can expect to encounter using intensive methods to grow hito are given in this leaflet.

Problem One: Fish Stocks

In some cases in Thailand more than one million fingerling fish are stocked per hectare per year to carry out intensive hito culture. The present supply of fingerling hito in the Philippines is not great enough to meet the demand for more than a small area of ponds stocked at this rate. Further, the supply of fingerling catfish in the Philippines is seasonal following the natural reproduction of wild fish. Fingerlings are very scarce during the off season from September to February in Central Luzon. The cost of hito fingerlings is already high, ranging from ₱0.08 to ₱0.35 apiece in 1973.

Special hatchery techniques for hito have been tested by the University of the Philippines and the Bureau of Fisheries but there is not yet any large scale commercial production of hito young in a

Philippine hatchery. The techniques used in a hatchery involve the injection of sex hormones into adult fish which are ready to reproduce. The hormones cause the parents to deposit and fertilize the eggs. The eggs are then held in the hatchery until the young fish hatch. Newly hatched fish or fry are fed minute water animals known as zooplankton until the fry are large enough to put into nursery ponds. Hatcheries have had difficulty securing adult fish ready to reproduce and the survival rate of young fish has been low. In the future hatcheries will probably be more successful provided there is a continued interest in the production of young hito.

Some shipments of hito fry have been brought by airplane from Thailand. The success of these imported fish, a different species from the local type, is not yet known. The local species has the scientific name, Clarias macrocephalus. The common Thai species has the scientific name, Clarias batrachus. There is some evidence that the local species grow slower than hito cultured in other countries.

Problem Two: Diseases

Hito appear strong because they can live several hours out of water. In reality, hito, like most fish, are susceptible to diseases and become sick and die easily. Many reports of diseased hito in the Philippines have been received. Even in Thailand only 60% survival of hito is expected in rearing ponds. A fish farmer should be prepared for the possibility that diseases may kill all his fish.

Diseases may show up at anytime but are most common a few days after stocking. Nobody is certain exactly what causes the diseases in hito or how sick fish should be treated. Probably stress such as at stocking time makes the fish weak and more susceptible to attacks by bacteria and parasites. A few dead fish floating in the pond are often the first sign of disease. Fish sometimes develop red or discolored spots which are symptoms of disease. Sick hito may also stop eating or swim about listlessly.

To help reduce incidence of disease, fish should be handled carefully. Time in transit should be kept to a minimum and water conditions should be changed slowly. Hito should be kept wet and handled gently. Preventive chemical baths may also be used. Treatment of a pond with 15 to 25 ppm formaldehyde at the time of stocking helps control external parasites. Holding hito prior to stocking for 72 to 96 hours in water with 15 to 25 ppm Terramycin will help protect the fish against bacterial diseases. The assistance of an experienced person where possible should be sought when attempting to solve a fish disease problem.

Problem Three: Feeds

Where hito are intensively cultured they are fed mostly on waste fish and a small amount of rice by-products. These feed ingredients are low in cost and abundant where they are used. For example, trawl fishing in the Gulf of Thailand yields many small fish which the Thai people do not eat so these fish can be purchased at little cost for use as fish feed. Thailand also has an abundance of rice and the Thai people do no like to eat broken rice. But these same conditions do not exist in the Philippines. All fish in the Philippines have some market value and the volume of trash fish is low, because trawlers throw the fish rather than fill their boats with this valuable cargo. Unsold fish in the markets are dried. Other low value fish care purchased for making patis fish sauce. Broken rice is eaten along with whole rice in the Philippines and rice bran is widely used as an animal feed. Rice products account for only 10% of the Thai fish feed and are used mostly to hold the ground fish into a paste for feeding. To be practical fresh fish for feeds must be available every day even in stormy weather which is certainly not the situation in the greater Manila area where typhoon storms may stop fish landings for several days. Several tons of trash fish would be needed daily just to support a few hectares of hito ponds.

The best feed conversion that could be expected in feeding hito with fresh ground fish is about 6 to 1. This means it would take 6 kg

of ground fish to produce 1 kg of hito. If the cost of the fish for feed were ₱1/kg then it would take ₱6 to produce 1 kg of hito. Not many fish which would be used as feed can now be purchased for as little as ₱1/kg and the wholesale value of hito has been less than ₱6/kg. The conclusion is that feeding hito with fresh fish is too expensive in the Philippines.

It is unlikely that imported or substitute ingredients could be economically used to replace fresh fish in feeding hito. Fish feeds must be high in protein, particularly animal protein, to support fish growth. Animal feeds around the world depend mostly on fishmeal and soybean meal to provide the protein supplement. Because of the large demand for these two commodities the price has gone very high during 1972 and 1973 and promises to remain high in the future. It is no longer economical for the Philippines to purchase fishmeal or soybean meal from the world market for use in feeding fish which are sold on the local economy.

Locally produced feed ingredients are either too expensive, not readily available, have better uses such as for human food or are not good as fish feed material. This includes items such as copra meal, peanuts, seaweed algae, slaughter wastes, dried small shrimps, animal manures, table scraps, ground fresh fish and stale bread.

Productions of hito in ponds without feeding will be very slow, probably much less than 500 kg/ha/yr. Other fish species which feed lower on the natural food chain than hito such as bangus, tilapia and carps, are easier to culture and give higher yields than hito in unfed fish ponds. Other problems of hito culture could be solved with a strong research effort, but as long as the cost of feed materials exceeds the potential for return there will be little future for intensive hito culture in the Philippines.

Other Problems

The capital requirements to start intensive hito culture are great. Just suppose somebody wished to culture hito in a small pond. Assume

a stocking rate of 50 fingerlings/m^2 at a cost of ₱0.10 fingerling. Then assume a feed cost of ₱1/kg which would include the cost of ingredients, transportation and preparation. Figure a feed conversion of 6:1 and a production of 5 kg/m^2. The cost of fish stocks and feed alone would be ₱35/m^2 or ₱35,000 for a 1000 m^2 pond. Add to this such costs as that of land and construction, labor, equipment, marketing expenses, interest and taxes. Then add the risk of losing the fish to diseases, storms, theft or other calamities. The only conclusion is that intensive hito farming even on a small scale must be a big business. Reducing the intensity of the culture operation would only cause matching reductions in production and even greater costs per unit of fish produced. Hito culture is not for the small investor.

Hito are sometimes called "walking catfish" because they cometimes leave the water where they live and squirm overground looking for a new place to live. There is a chance of hito "walking" away from a culture pond unless a low fence is placed around the pond to prevent escape. A fence would also help keep the predatory fish, dalag, out of the ponds.

Ponds which are receiving large amounts of ground fish as feed start to smell bad in a few days. Because of this ponds should be located in an area where the smell is not objectionable.

Other countries have found only a limited demand for their hito on the export market.

IV. Status of Construction

A. Brackishwater Station (Leganes, Iloilo)

Construction came to a virtual stop when the Villafuerte Construction Co. abandoned the site and then resumed on October 24, 1973 under the direct supervision of the Project. The Amalgamated Project Management Services (APMS) retains one work engineer at job site to assist the IFP staff.

As of the end of 1973 excavation of all 49 units of 500 m^2 ponds had been completed. Clearing, grubbing and leveling of the ponds are in progress. Plans are afoot to start using completed ponds for research by early 1974.

The construction of the administration and service-garage buildings is nearing completion.

The work program suffered a slight setback when the jobsite was overflooded on November 21, 1973 in the course of typhoon Openg. Work is expected to accelerate in the coming months.

B. Freshwater Station (Muñoz, Nueva Ecija)

This station was completed as early as November 1973, and put into full operation by the following December. The Freshwater Station was officially inaugurated on November 28, 1973.