AGENCY FOR INTERNATIONAL DEVELOPMENT
WASHINGTON, D. C. 20523
BIBLIOGRAPHIC INPUT SHEET

FOR AID USE ONLY
Batch 65

1. SUBJECT CLASSIFICATION	A. PRIMARY	TEMPORARY
	B. SECONDARY	

2. TITLE AND SUBTITLE
Application of radio to teaching elementary mathematics in a developing country; annual report,1976/1977

3. AUTHOR(S)
(101) Stanford Univ. Inst.for Mathematical Studies in the Social Sciences

4. DOCUMENT DATE	5. NUMBER OF PAGES	6. ARC NUMBER
1977	130p.	ARC

7. REFERENCE ORGANIZATION NAME AND ADDRESS
Stanford

8. SUPPLEMENTARY NOTES (*Sponsoring Organization, Publishers, Availability*)
(Research summary)

9. ABSTRACT
(EDUCATION R&D)
A PROJECT: To use radio to teach elementary mathematics in Nicaragua. Conducting the project is the Institute for Mathematical Studies in the Social Sciences at Stanford University in collaboration with the Government of Nicaragua.
DURATION: June 1974 through June 1979
DEVELOPMENTS: Summarizing the project from July 1, 1976 to June 30, 1977, the report includes a project calendar which lists the dates that define the program. The teaching in grades one and two during the 1976 operations year is examined. The study analyzes these facets of the program; operations in the schools, the instructional program, observations of student participation and interest, measurement of student achievement, and assessment of teacher attitudes. Tables present data derived from tests designed to evaluate these areas. The report provides plans of implementing the program at the third grade level in 1977. In February 1977 the project was awarded the 11th Japan prize for educational radio programs, this award and its effects are discussed. Other areas of the program which are summarized are: the collection and analysis of the school and demographic data; an analysis of addition and subtraction skills; computer generation of arithmetic exercises; a cost analysis; and an analysis of weekly test data. The study also examines these aspects of the project -- project administration, the work plan of 1977-78, the dissemination and use of research results and the involvement of women and minority personnel.

10. CONTROL NUMBER PN-AAE-041	11. PRICE OF DOCUMENT
12. DESCRIPTORS	13. PROJECT NUMBER
	14. CONTRACT NUMBER AID/CM/ta-C-73-40 Res.
	15. TYPE OF DOCUMENT

AID 590-1 (4-74)

AID/CM/ta-C-73-40
PN-AAE-041 Rev.
Stanford

Fourth Annual Report

Agency for International Development

APPLICATION OF RADIO TO TEACHING ELEMENTARY MATHEMATICS IN A DEVELOPING COUNTRY

Barbara Searle, Jamesine Friend,

Patrick Suppes, and Thomas Tilson

with the assistance of

Alicie Gordillo de Quintanilla, Norma Guadamuz C. de V.,
Paul Matthews, Juan Jose Montenegro Pineda, Marvin A. Saballos R.,
John Sheehan, Vitalia Vrooman, William Wagner, and Mario Zanotti

July 31, 1977

The research in this report was supported by the
U.S. Agency for International Development, Department of State
Contract No. AID/CM-ta-C-73-40

INSTITUTE FOR MATHEMATICAL STUDIES IN THE SOCIAL SCIENCES

STANFORD UNIVERSITY

STANFORD, CALIFORNIA

ABSTRACT

The Radio Mathematics Project was established to design, implement, and evaluate a prototype system of teaching elementary mathematics using radio as the major medium of instruction. The project, working in rural and urban primary schools in Nicaragua, presents daily mathematics lessons in second- and third-grade classrooms. Each lesson has a 30-minute broadcast portion followed by teacher-led activities specified in a teachers' guide. The project has directed its work towards simplifying the program and decreasing the cost of its use to make its implementation possible by even the poorest nations. Evaluation results indicate that children learning by radio score significantly higher on a test of mathematics achievement than those in traditional classrooms on a test designed to be appropriate for both groups. The children in radio classrooms remain attentive and responsive for a half-hour radio lesson, provided they have the opportunity to respond frequently, and they are able to respond at the high rate of four to five times a minute. Teachers of experimental classes support the use of radio lessons in their classrooms and recommend the use of the program by other teachers.

TABLE OF CONTENTS

	Page
Introduction	1
Project Calendar	3
I. THE 1976 OPERATIONAL YEAR	5
A. Grade 1 Program	5
1. Operations in the schools	5
2. The instructional program	8
3. Observations of student participation and interest	9
4. Measurement of student achievement	15
5. Assessment of teacher attitudes	28
B. Grade 2 Program	41
1. Operations in the schools	41
2. The curriculum	42
3. The instructional program	46
4. Results	54
II. THE 1977 OPERATIONAL YEAR	59
III. COMPARISON OF INSTRUCTIONAL PROGRAMS FOR DIFFERENT GRADE LEVELS	63
IV. JAPAN PRIZE	69
V. OTHER ACTIVITIES	71
A. Collection and analysis of school and demographic data	71
B. Analysis of addition and subtraction skills	71

C. Computer generation of arithmetic exercises 71

D. Analysis of weekly test data 72

E. Cost analysis 73

VI. PROJECT ADMINISTRATION 75

VII. WORK PLAN FOR 1977-78 77

VIII. DISSEMINATION AND UTILIZATION OF RESEARCH RESULTS 79

IX. INVOLVEMENT OF MINORITY PERSONNEL AND WOMEN 85

X. REFERENCES 87

APPENDIX

A. Outline of testing procedures for 1976 Grade 1 evaluation 89

B. Data Tables 91

C. Teacher questionnaire 109

D. Report to the Smithsonian Science Information Exchange 125

INTRODUCTION

The Radio Mathematics Project was established to design, implement, and evaluate a prototype system of teaching elementary mathematics, using radio as the major medium of instruction. Since June 1974 the Institute for Mathematical Studies in the Social Sciences of Stanford University (funded by the United States Agency for International Development) and the Government of Nicaragua have been collaborating on the development of such an instructional program for use in the primary schools of Nicaragua. In this report we summarize the work of the year ending June 30, 1977, and describe plans for the remaining two years of the contract, which ends June 30, 1979. In this introduction we take the opportunity, from the vantage point of three years' experience in Nicaragua, to discuss some general issues regarding innovative instructional programs and the impact these issues have had on our activities, especially during the past year.

Our work in curriculum development in Nicaragua has four goals. The first is to teach successfully. Mathematics is taught poorly in primary classrooms around the world. In Nicaragua, as in many other countries, the teachers themselves have had little instruction past the primary level and almost no instruction in techniques of teaching mathematics. It is therefore not surprising that achievement levels are low. We have several reasons for anticipating that our program will produce higher achievement levels than those attained in traditional classrooms. First, the use of radio as a medium for delivering instruction makes it possible to raise uniformly the level of instruction in many classrooms. Second, we use a careful system of obtaining information about the impact of our lessons on student attitudes. Finally, we are able to draw on long experience in curriculum development to guide our work in Nicaragua.

The second goal is to present lesson material appropriately for the target audience--all the primary school children of Nicaragua. We have attempted to use language that is familiar and comprehensible and to use examples that the children can relate to their daily lives. As we develop lessons we assess their appropriateness by observing student responses in the classroom.

A third goal is that the mathematical content be recognized as valid by the education authorities of the country. To this end, our program follows the curriculum guide prepared by the Ministry of Public Education and has been reviewed by an Advisory Committee of prominent Nicaraguan educators.

The fourth goal is to minimize both the cost and complexity of implementing the mathematics program in schools. In common with many countries, Nicaragua spends almost its entire primary-school budget for teachers' salaries. Little money is available for materials and

supplies for classrooms, supervisory activities are poorly supported, and infrastructure deficiencies impede the distribution of those materials that are available. Thus, it seems clear that widescale use is only possible for a program whose yearly cost per student is low, and whose requirements for supervision and distribution of materials are also low.

In discussing this last issue, it is important to separate implementation costs from development costs. In the case of the Radio Mathematics Project, most of the costs of lesson development are being borne by an external funding agency (AID) while, if the program is to continue in Nicaragua, implementation will most likely be supported locally. Thus, the explicit goal of keeping costs low applies to implementation but not to development.

During the course of our work we have attempted to simplify implementation and reduce costs in two areas--in the use of visual material accompanying lessons and in the amount of teacher training provided. As we describe in some detail in the body of this report, we have moved from printed student worksheets (first grade) to exercises and illustrations written on the blackboard by the teacher (second grade) to exercises and illustrations written in student notebooks by the students themselves (third grade). We must emphasize that by eliminating student worksheets we have not abandoned written work, which remains an essential feature of the instructional program. Nor have we eliminated illustrative materials. We have simply shifted their production, first to the teacher, then to the student.

Each year we have devoted fewer hours to teacher training. In 1975 we provided a total of six sessions--two before school began, the remainder at roughly six-week intervals. In 1976 we conducted two three-hour sessions before school started. In 1977 the same material was covered in a single three-hour training session. (During 1976 and 1977 contact was maintained with teachers by messages transmitted during the radio lessons.) We have found that teachers new to the program can learn to use the radio lessons with only the brief single training session.

To summarize, we list the elements required to implement the third-grade lessons. Centrally we need a broadcasting facility that can assign an uninterrupted half-hour a day at a fixed time. Each classroom must have a radio receiver--with batteries if the school does not have electricity--and a teachers' guide. Each child must have a notebook and a pencil and some simple materials, such as seeds or bottle caps, that can be collected locally at no cost. And that is all. We do not claim that this level of material support is optimal. We do, however, feel that it is of practical importance to demonstrate that mathematics can be taught <u>effectively</u> in the primary-school classroom with this level of material support.

PROJECT CALENDAR

July 1, 1976 to June 30, 1977

July 1	Middle of 1976 school year.
	Lesson 90 broadcast by Radio Nacional to 45 first-grade and 40 second-grade classes in Masaya, Granada and Carazo.
	Weekly test administration continued in 12 first-grade and 12 second-grade classes.
August 4	Presentation by Nicaraguan staff members to School Inspectors and Subinspectors.
August 16 - 30	Addition and subtraction test administered to 2000 students, Grades 1-4, in Managua.
September 5 - 10	International conference on instructional radio held at INCAE, Managua.
September 20 - 28	Addition and subtraction test administered to 1000 students, Grades 5 and 6, in Managua.
October 11 - November 12	Posttests administered to 53 first-grade, 46 second-grade, 24 third-grade and 12 fourth-grade classes.
	Questionnaires administered to teachers.
	Forms sent to teachers for student data collection.
October 13	Lesson 150 broadcast (last first-grade lesson)
October 14	Lesson 1 of second grade series broadcast to first grade.
November 1	THE RADIO MATHEMATICS PROJECT: NICARAGUA 1974-1975 published.

November 18	Last day of regular classes. Lesson 25 of second grade series broadcast to first grade. Lesson 175 broadcast to second grade.
December 1 - 2	Seminar on Radio Mathematics Project held in Masaya for Ministry of Public Education and university personnel.
January 24 - 26, 1977	Field visit, sponsored by EDUTEL, for economic study of the project.
February 15 - 19	Teacher training, 1 session each for participating teachers in Masaya, Granada, and Carazo.
February 28	Lesson 1 broadcast by Radio Nacional to 55 second-grade classes and 60 third-grade classes.
February 28 - March 17	Pretests administered to 18 second-grade, 36 third-grade and 24 fourth-grade classes.
March 1	Japan Prize awarded to the Radio Mathematics Project for Lesson 171, second grade.
March 10	AID Review meeting in Washington, D.C.
April	Forms sent to teachers for student data collection.
June 22	A.I.D. and Ministry sign new contract to extend project.
June 30	Middle of 1977 school year. Lesson 79 broadcast to second and third grades. End of initial four-year contract.

I. THE 1976 OPERATIONAL YEAR

During 1976 the project broadcast lessons at two grade levels. The lessons developed during 1975, with some modifications, were used in first-grade classes and a new set of lessons for second grade was developed and broadcast. We also carried out preliminary testing and curriculum work for third grade. A special test in addition and subtraction was developed and administered to school children in Managua.

The production of lessons and the collection of data ran reasonably smoothly during the year. However, the project experienced serious difficulties with radio transmission. For example, during the period from March 8 to June 18, problems were registered on 29 occasions. These included three power failures, six equipment failures, and five interruptions for official programs. The remaining problems were human errors, for example playing the first-grade lesson in the second-grade time slot, and so on. First grade lessons, which were broadcast at 9:00 a.m., were hardest hit, and during this period approximately 10% of the instructional time was lost. Various government officials were notified and by the end of the year these problems had decreased in severity.

The work of the first six months of 1976 is covered in the previous annual report and will not be reviewed here except when necessary. In the following we discuss first and second grades separately because the nature of the activities was quite different.

A. Grade 1 Program

1. Operation in the schools. Forty-five classes in the departments of Masaya, Granada, and Carazo used the Grade 1 program. Thirty of these classes had been randomly selected and constituted the experimental group for the formal evaluation of Grade 1. (The selection of these classes is described in the previous annual report.) The remaining fifteen classes were taught by volunteer teachers, most of whom had used the program the previous year and wanted to participate again.

The teachers of all radio classes were invited to participate in two three-hour training sessions before school opened. These sessions were used to discuss the teacher's role during radio lessons, the mechanics of material distribution and use, and the relationship of the radio lessons' content to the official curriculum. Teachers were also given the opportunity to listen to lessons and to learn more about the goals of the project. The teachers were not compensated for attendance at the meetings but their carfare was reimbursed.

The 30 experimental classes and the 15 nonexperimental classes were treated differently during the year. For most of the experimental classes, contact between project personnel and teachers was strictly regulated and kept to a minimum. After the teacher training sessions, all information flow between the project and these teachers occurred through two channels--the radio and the office of the School Inspector in each department. An exception to this procedure was made for eight classes that were included in the weekly testing program described below.

Lesson materials, consisting of student worksheets and teachers' guides, were produced at the project office and distributed monthly through the Office of School Inspector in each department. Teachers must come to the Inspector's office to receive their pay checks and we therefore delivered materials immediately prior to pay day. Approximately 40,000 worksheets and 900 teachers' guides were distributed each month.

Table 1 reports the frequency with which the thirty teachers in the experimental group picked up materials. Teachers in the department of Carazo had a perfect record--obtaining materials on nine occasions. In the other departments the number of pickups ranged from 6 to 9 with a mean of about 7.5. The table also contains information about the monthly return of worksheets. One lesson segment each month was designated as a test and teachers were asked to return that day's worksheets to the Inspector's Office when they picked up new materials. As can be seen, the teachers were less faithful about return than about pickup, although the overall rate of 80% is quite high.

Twelve classes, nine in Masaya and three in Granada, were selected for the weekly testing program. Each week six of these classes were given a test, administered by a project staff member at a period during the school day other than the mathematics lesson. Each test had three forms, each student responded to about 10 items, and thus, each week information was collected on approximately 30 items. The design of these tests and some results are described later in this report.

Six schools in the nonexperimental group were used for classroom observations. Each school was visited from two to three times a week and at least two classes were observed each day. During the year 385 classroom observations were made. Under the observation schedule used for the second half of 1976, a team of two observers went to each school. Both people watched the broadcast portion of the second-grade lesson at 8:30 a.m. Then at 9:00 a.m. one observer moved to the first-grade classroom to see the broadcast activities. When the second-grade postbroadcast activities were completed, usually about 9:30, the other observer moved to the first-grade room to watch the remainder of the lesson.

A pretest and a posttest were administered to students in all radio classes. The same tests were also administered to students in

Table 1

Exchange of Worksheets by Experimental Teachers in Three Departments

Department	Mean Response: Materials picked up[a]	Mean Response: Worksheet sets returned[b]
Masaya	7.6	5.7
Granada	7.5	4.7
Carazo	9.0	6.3
Total	8.0	5.6
Percentage of maximum	88.9%	80.0%

[a]Maximum = 9

[b]Maximum = 7

24 randomly-selected control classes. The tests are fully described in the previous annual report. Both the pretest and the posttest were administered by the project staff, rather than by the classroom teachers. For greater uniformity of administration, the posttest had tape-recorded instructions. All instructions for both tests had been pilot tested and modified on the basis of classroom trials (in classrooms not otherwise involved with the project). Results from earlier administrations of the tests showed that students were able to follow the directions for responding. An outline of the procedure followed for each test administration can be found in Appendix A.

At the beginning of the year first-grade classrooms were quite crowded and the seating arrangements would have provided much opportunity for copying. Therefore, test administrators were instructed to first excuse all children 6 years and under. (These students are not fully matriculated; the official school admission age is 7 years.) Then children were removed at random (by referring to the class list) until the number of students was reduced to the number of seats available, leaving an empty space beteen children who sat on benches. At the end of the year if the room could accommodate all the children all were posttested. If not, then the names of those who had been pretested were read and those children were given priority for taking the test.

The pretest was administered in the period between February 23 and March 29 at the beginning of the school year. The posttest was

administered between October 11 and November 12 at the end of the school year. In both cases, the testing of experimental and control classes was distributed over the entire testing period. The main constraint on the testing schedule was the availability of cars. Tests were administered at several grade levels (135 classes at four grade levels for the posttest). With four cars it was possible to test only six to eight classrooms a day.

2. The instructional program. The first-grade instructional program consists of 150 radio lessons for children and teachers' guides that provide directions to teachers for postbroadcast activities. Most lessons are accompanied by student worksheets. The design and development of the 1975 program is described in Searle, Friend, and Suppes (1976). The program used in 1976 differs from that of 1975 in the following ways.

a. Incorporation of "readiness" material into recorded lessons. Fifteen lessons, presented during the first weeks of school in 1975, had no radio component and were designed to build the skills we thought students needed for using the student worksheets. Observations in the classroom indicated that these topics could have been taught as well (and perhaps more efficiently) by radio, and that students already had many of the necessary skills. Therefore, in 1976 we eliminated these lessons and began using recorded lessons immediately, incorporating into the early lessons the appropriate "readiness" exercises.

b. Extension of short lessons. The appropriate length for lessons was subject to investigation during 1975. The earliest lessons lasted approximately 15 minutes. During the year the length was gradually increased to 25 minutes, the appropriate length for a one-half hour radio time slot. Before use in 1976, all short lessons were lengthened to 25 minutes, in some cases by adding instructional segments and in others by adding entertainment segments.

c. Revision of teachers' guides. During 1975, both classroom observers and teachers felt that the guides should be more explicit, and most of the guides were revised for use in 1976.

d. Provision of extra lessons. The full school year lasts 35 weeks, and the 150 recorded lessons provided material for only 30 weeks. In 1976, the teachers were given two options for conducting mathematics lessons during the last five weeks of school: The first 25 lessons for Grade 2 were broadcast during the first-grade time slot and teachers were provided with the appropriate guides; as a second alternative, teachers were given a guide covering topics that were in the official first-grade curriculum but were not taught by the radio instructional program. They could thus extend the first-grade program either by using second-grade radio lessons or by working (without the radio) on those first-grade topics not previously taught.

This last point requires some comment. In 1975 we reviewed the Ministry of Public Education curriculum guide for first grade and decided to teach all of the major topics except multiplication. The decision to postpone multiplication was based on several considerations. First, the results of the 1974 posttest of first grade indicated that, although presumably multiplication had been taught, the childen knew very little about it. Second, multiplication is rarely included as a first-grade topic in programs developed in the United States (although some multiplication "readiness" exercises are often included in the last pages of typical textbooks). Finally, our Nicaraguan curriculum expert, who had participated in the preparation of the curriculum guide, explained that at the time the guide was written, it had been the intention (not subsequently followed) to shorten primary school to four years and that therefore, the grade position of many topics, including multiplication, had been advanced. Thus, our decision seemed to us soundly based. However, it was universally disapproved of by the teachers. No other aspect of the program received more criticism than the failure to include multiplication as a first-grade topic. Thus, we thought it important to provide a specific opportunity for teachers who felt strongly about multiplication to teach it themselves. And we shall certainly include it in a revised version of the first-grade program.

3. Observations of student participation and interest. Project staff members visiting classes used a special form to record their observations. Observers are trained to record levels of student participation and interest and other noteworthy aspects of the lesson. Although the observation form has a fixed format, a version is prepared specifically for each lesson. The first and last pages of the form for Lesson 50 are shown in Figures 1 and 2 (translated from the Spanish). The lefthand column of the form shows the handwritten identification of each lesson segment; R identifies a segment in the recorded portion of the lesson, R.M. a transition segment initiated by the radio and completed by the teacher, and M identifies a segment taught by the teacher. Mathematics segments are identified consecutively by number; unnumbered segments are entertainment segments. The small boxes along the right margin of the left column are used to record the time at which a segment begins and ends. This information is noted only for the beginning of the lesson and for the segments taught after the broadcast is completed.

In the righthand column is a suggested list of aspects the observer should comment on. When either the curriculum department or the script department has specific questions about a segment these are written at the top of the appropriate box in the center column.

Summarizing the observation data in a form that was useful to the curriculum development team proved to be troublesome. At the beginning of the school year a daily summary was prepared from individual observation sheets. This system was time-consuming and was replaced in July. In the new scheme each observer was asked to record

School _____ Teacher _____ Lesson 50 Grade _____

Students present _____ Observer _____ Date _____

Segments		What to observe
R. game Mando-Mando		1. Guide } errors 2. Lesson } 3. Interest 4. Participation
R 1 oral addition with fingers (3+1)		5. Comprehension of content 6. Mathematical errors 7. Use of materials 8. Instructions
R 2 Counting sounds 1 to 7		9. Activities after the transmission 10. Responses 11. Other comments
R.3 reading numerals 0 to 19		

Figure 1. First page of observation form for Lesson 50 (translated).

Segments		What to observe
RM. 7 vertical addition 3 +1		1. Guide } errors 2. Lesson } errors 3. Interest 4. Participation
M.8 rote counting		5. Comprehension of content 6. Mathematical errors 7. Use of materials 8. Instructions
M.9 rote counting by 5's		9. Activities after the transmission 10. Responses 11. Other comments
M. 10 oral addition (1+1)		

Figure 2. Last page of observation form for lesson 50 (translated).

his observations directly on a master summary sheet. With this procedure, the observation data were available in concise form on the same day the lesson was broadcast. Near the end of the year a weekly summary system was established. This system was initiated to condense the voluminous unedited reports and to draw special attention in a brief form to the important comments made. The system proved to be satisfactory and was continued in 1977.

Many comments made by observers were specific to individual lessons. However, two aspects were reported frequently enough to summarize for a large group of lessons, namely the level of student participation and the level of student interest. We report here on observation data collected on 935 segments which comprised 99 lessons between Lesson 2 and Lesson 122.

Table 2 presents the numbers of segments for which each type of information was collected. Levels of participation were recorded for 79% of the segments, levels of interest for 28%. The paucity of reports of interest level, particularly for mathematics segments, can be attributed to the difficulty experienced by the observers in judging interest level separately from the degree of participation. Smiling, laughing, and certain body positions were judged to be good indicators of interest, while talking to neighbors, physical interaction with neighbors, and excessive manipulation of objects other than those in use were taken to be indicators of disinterest. However, such physical manifestations did not occur with high frequency. In general, students appeared to be attentive to the broadcast; in such cases observers recorded only the participation level.

Table 2

Classification of Observation Data from 99 Grade 1 Lessons

		Segments with participation data		Segments with interest data	
Segment type	Total	Number	Proportion	Number	Proportion
Mathematics	577	412	.71	59	.10
Entertainment	358	327	.91	204	.57
Total	935	739	.79	263	.28

In rating participation, the observers scored the percentage of children participating in the activity on a five-point scale. The scale and the distribution of ratings are shown in Table 3. Overall,

the participation level was quite high: 67% of the segments were given ratings of 60% or greater while 27% of the segments were rated 40% or less.

Table 3

Distribution of Participation Ratings for All Segments

Rating	Participation level	Number of segments	Proportion of segments
++	> 80%	126	.17
+	60-80%	291	.40
?	40-60%	149	.20
-	20-40%	105	.14
--	< 20%	68	.09
Total		739	1.00

Table 4 presents the participation ratings separately for mathematics and entertainment segments. The proportion with low ratings was substantially higher for entertainment segments than for mathematics segments. To some extent this reflects the fact that all mathematics segments were written to elicit active responses from the children, while in the first-grade curriculum this was not true of all entertainment segments--in some cases, children were expected to listen without responding. In these cases, we expected that children would be interested even if they didn't participate. The ratings for interest reported in Table 5 show that contrary to our expectations, the interest rating was low for a substantial proportion of entertainment segments. We think, and the observers concur, that in most cases the children were less interested in a segment if it did not solicit their participation.

We can explore further the sources of disinterest and lack of participation in entertainment segments by looking at the ratings for different types of entertainment. These are presented in Tables 6 and 7. We note first that the pattern of results is quite comparable for interest (Table 6) and participation (Table 7); on the whole these occur together. One exception occurs for songs. Some of the songs were taught to the children and they were encouraged to sing. Other songs, generally more complicated or faster paced, were simply

Table 4

Participation Ratings for Mathematics and Entertainment Segments

	Mathematics segments		Entertainment segments	
Rating	Number of segments	Proportion of segments	Number of segments	Proportion of segments
++	57	.14	69	.21
+	190	.46	101	.31
?	107	.26	42	.13
-	53	.13	52	.16
--	5	.01	63	.19
Total	412		327	

Table 5

Interest Ratings for Entertainment Segments

Rating	Number of segments	Proportion of segments
++	16	.08
+	102	.50
?	17	.08
-	28	.14
--	41	.20

played. The occurrence of these two types of songs is reflected in the bimodal distribution of the participation ratings (Table 7). Nevertheless, the interest level for all songs was high (Table 6). Thus the children were apparently interested even in those songs they did not sing.

Table 6

Interest Levels for Different Types of Entertainment

Rating	Songs (n=62)	Games (n=59)	Bombas (n=38)	Jingles (n=11)	Riddles (n=16)	Jokes (n=15)
++	.07	.12	0	0	.12	0
+	.77	.80	0	.55	.13	0
?	.11	.05	.09	.27	.13	.13
-	.05	.03	.16	.18	.25	.13
--	0	0	.75	0	.37	.74

Table 7

Participation Levels for Different Types of Entertainment

Rating	Songs (n=133)	Games (n=74)	Bombas (n=32)	Jingles (n=28)	Riddles (n=31)	Jokes (n=15)
++	.29	.34	0	.04	.06	0
+	.31	.57	0	.32	.26	0
?	.13	.05	.06	.25	.10	.13
-	.20	.04	.06	.25	.16	.13
--	.07	0	.78	.14	.42	.74

Using interest and participation as measures, songs and physical games were clearly the most successful types of entertainment. The least successful were bombas and jokes. (Bombas are short traditional poems.) Jingles and riddles had a more mixed reception.

4. Measurement of student achievement. During 1976 the project conducted the first formal evaluation of its instructional program, using lessons for Grade 1. A full report of the evaluation is presented elsewhere (Searle, Matthews, Suppes, & Friend, 1977). Here we will excerpt the results section, presenting only the most important findings.

The posttest used a matrix-sampling design with tests constructed from two types of items: I items, for which the printed component of the item could differ for children in the same classroom, and G items, for which the printed component of the item was the same for all the children in a single classroom. (The test design has been described in several previous project publications.)

A combination of analysis strategies was used to interpret the test data. The matrix sampling philosophy aims to achieve interential validity by randomly assigning units, in this case by randomly assigning urban and rural schools to experimental or control, and randomly assigning test forms to classrooms and students. Under the assumptions of random assignment unbiased estimates of population test scores can be obtained for the treatment and control groups and the scores compared even though not every student answered every test item.

While the matrix sampling test design was not intended to provide an analysis of individual differences, some assessment of the influence of variables such as pretest score and sex on posttest achievement is desirable. If, for example, the treatment and control groups did not have the same distribution of pretest scores, then the items and matrix sampling analyses presented above may be subject to dispute. Note that characteristics such as pretest score and sex were not factors in the random assignment of individuals for the matrix sampling design, and that the effects of such characteristics must be taken into account statistically after the data are collected.

Multiple regression was used as the statistical method for analyzing individual differences, with posttest achievement being expressed as a linear combination of observed factors. At the present time the project's data base can be used to identify the following factors for the majority of students:

a. pretest score
b. urban or rural
c. sex
d. experimental or control.

It would also be desirable to consider additional factors such as chronological age, parental income and number of previous enrollments. As more data are received from Nicaragua these and other factors will be considered.

Table 8 gives the distribution of students with both pretest and posttest classified by test form, urban/rural classroom and sex. Recall that each student takes a subtest consisting of one G form and one I form, and that there are about twice as many urban as rural students. The random assignment of schools, classrooms and test forms should give approximately equal numbers of students in the "rural" cells and also in the "urban" cells. The notable exception to this desired result is test form G-2 where there are too few rural students in the control group.

Table 8

Distribution of Students With Both Pretest and Posttest

Posttest form	sex	Control		Experimental	
		Rural	Urban	Rural	Urban
G-1	Male	26	11	17	40
	Female	30	13	17	28
G-2	Male	2	45	10	37
	Female	0	43	19	38
G-3	Male	21	19	14	44
	Female	14	16	14	25
G-4	Male	16	10	19	10
	Female	18	20	12	10
I-1	Male	16	20	16	29
	Female	16	28	15	23
I-2	Male	17	28	16	34
	Female	21	20	14	24
I-3	Male	16	12	11	35
	Female	14	26	18	24
I-4	Male	16	25	17	33
	Female	11	18	15	30

Within the matrix sampling design it is difficult to obtain individual posttest scores that permit comparison of all individuals since the distribution of scores for various test forms may vary and no individuals take every test form. For the present data the sample sizes and number of test forms allows the option of performing separate regression analyses for each test form and then comparing regression results across test forms to observe consistent effects.

Posttest scores were also analysed by item content to determine whether the experimental program was differentially effective by content areas. It was expected that topics that received more development and broadcast time in the radio lessons might show stronger effects compared to the control group.

The numbers of students taking the pretest and the posttest are shown in Table 9. Of those students taking the pretest, only about half also took the posttest, reflecting the high dropout rate known to characterize first grade in Nicaragua. Of the children who took the posttest, two-thirds also took the pretest. Some of the remaining third are students who were present at the beginning of the school year but were not pretested because of overcrowded conditions. The remainder are students who entered school after the beginning of the year.

Average pretest scores are presented in Table 10 which compares the experimental and control groups, and the pretest only and both pretest and posttest groups. Approximate F-ratio statistics for a two-way analysis of variance were calculated for these comparisons by multiplying the variance of the means by the harmonic mean number of observations and dividing by a weighted average of within-cell variances. These F statistics indicate that students who were not posttested had significantly lower ($p<.01$) pretest scores than students who were present for the posttest, and that the experimental group had significantly higher ($p<.05$) scores than the control group. The former difference would be expected if students with lower ability as measured by pretest are more likely to drop out or be absent from school as the school year progresses.

As discussed earlier, the posttest contains two types of items, those given to all students in a classroom (G items) and those administered to subsets of students within a classroom (I items). For purposes of the first analysis reported here we consider G and I forms as two separate tests each with a matrix-sampling design. Methods described by Sirotnik (1974) were used to estimate means and standard errors for each test. The mean posttest scores for the experimental and control groups are obtained by adding the average scores for each test form, while the standard errors are calculated using a weighted average of items-by-students interaction variances (i.e., the residual variance after main effects of items and students have been removed) across the blocks of the matrix sampling design.

Table 9

Number of Students in Different Testing Conditions
in 1976 First-grade Testing Program

Condition	Experimental N	Experimental percentage of total	Control N	Control percentage of total
		Pretest		
Pretest only	342	49.1	260	46.1
Both pretest and posttest	354	50.9	304	53.9
Total	696	100.0	564	100.0
		Posttest		
Posttest only	217	37.8	134	30.4
Both pretest and posttest	354	62.2	304	69.6
Total	571	100.0	438	100.0

The estimates in Table 11 show a superiority of the experimental group on both tests. For the G test, with 44 items, the means are 33.1 and 20.7 for experimental and control groups respectively. For the I test, with 40 items, the means are 22.1 and 13.5.

The assumptions of this analysis are that both items and students have been assigned at random to forms. Neither of these conditions is exactly met in the present case. In particular, students are assigned to G forms under the obvious restriction of their class membership. Thus, the assumption of randomness is relatively weak in the case of the G forms, in which all students in the class received the same form. Nevertheless the matrix sampling analysis is useful in providing an estimate of the average test scores that would be obtained if every student responded on each test form. The precision of an estimated mean can be evaluated by considering the estimated mean plus or minus twice its standard error. For the estimates of Table 11 the experimental group scores on the order of 11 standard errors higher than the control group for the combined G and I forms indicating a robust favorable effect of the experimental treatment on posttest achievement. However, formal tests of statistical significance are reserved for the more detailed analyses presented below.

Table 10

Comparison of Pretest Scores for Groups in Different Test Conditions for 1976 First-grade

	Score[a]					
	Experimental			Control		
Condition	N	Mean	SD	N	Mean	SD
All students	696	20.92	4.63	564	20.28	5.20
Pretest only	342	20.44	5.61	260	19.99	5.74
Both pretest and posttest	354	21.38	4.18	304	20.53	4.67

Note. Difference between pretest only and pretest & posttest: $F = 6.78$ $df = 1, 1256$ $p < .01$

Difference between experimental and control groups: $F = 4.96$ $df = 1, 1256$ $p < .01$

[a]Maximum score = 28.

Table 11

Matrix Sampling Estimates of Posttest Means and Standard Errors

	Experimental[a]		Control[b]	
Test Forms	Mean	SE	Mean	SE
G	33.1	1.0	20.7	1.4
I	22.1	1.2	13.5	1.2
G & I	55.2	1.6	34.2	1.8

[a]N = 571

[b]N = 438

The multiple R's for each test form regression indicated a significant degree of relationship ($p<.001$) between posttest achievement and a linear combination of the identified factors. Multiple R's and standard errors of estimation are presented in Table 12, and suggest that the separate regressions are comparable in terms of variance accounted for and goodness of fit of the regression plane. Regression coefficients and beta weights (i.e., coefficients divided by their standard errors of estimation) are given in Tables 13 and 14, and beta weights are plotted across test forms in Figure 3. Beta weight values greater that 1.65 may be considered "large" and values greater than 2.00 "strong." These results indicate that both treatment and pretest have strong effects on posttest achievement for every test form, while the urban/rural variable has a weaker but consistent effect and sex has no large or consistent effect. Note that although significance tests are reported for each test form regression, the regression results are evaluated primarily with regard to the consistency of results across regressions.

Table 12

Regression Multiple R's for each Test Form

Posttest Form	R	SE
G-1	.706	2.02
G-2	.610	2.31
G-3	.704	2.24
G-4	.651	2.21
I-1	.656	2.25
I-2	.552	2.41
I-3	.564	2.64
I-4	.714	2.32

To summarize, the following conclusions can be drawn from the basic regression analyses:

a. Students participating in the experimental program score higher on all posttest forms than control students.

b. Students with higher entering ability, as measured by pretest, score higher on all posttest forms.

c. Students in urban classrooms generally score higher on posttest than students in rural classrooms.

d. There are no appreciable sex differences in posttest achievement.

Table 13

Regression Coefficients for G Test Forms

Independent variables	Coefficient	Beta weight
	Form G-1	
Constant	0.993	
Pretest	0.232	6.51*
Urban/rural	-0.036	-0.11
Sex	-0.050	-0.16
Treatment	3.061	9.21*
	Form G-2	
Constant	-1.648	
Pretest	0.273	6.84*
Urban/rural	1.796	3.65*
Sex	-0.353	-1.05
Treatment	3.037	8.51*
	Form G-3	
Constant	-1.154	
Pretest	0.283	7.01*
Urban/rural	0.533	1.40
Sex	-0.375	-1.06
Treatment	3.002	8.33*
	Form G-4	
Constant	1.135	
Pretest	0.191	4.09*
Urban/rural	0.658	1.56
Sex	0.259	0.59
Treatment	3.192	7.57*

*$p < .001$

Table 14

Regression Coefficients for I Test Forms

Independent variables	Coefficient	Beta weight
	Form I-1	
Constant	-3.685	
Pretest	0.337	8.75***
Urban/rural	0.307	0.84
Sex	-0.351	-0.99
Treatment	1.858	5.23***
	Form I-2	
Constant	-4.265	
Pretest	0.349	7.82***
Urban/rural	0.247	0.65
Sex	0.302	0.78
Treatment	1.078	2.93**
	Form I-3	
Constant	-2.860	
Pretest	0.312	6.52***
Urban/rural	0.524	1.19
Sex	0.207	0.48
Treatment	1.726	3.97***
	Form I-4	
Constant	-2.885	
Pretest	0.288	6.58***
Urban/rural	0.770	2.02*
Sex	-0.205	-0.56
Treatment	3.491	9.31***

*p < .05.
**p < .01.
***p < .001.

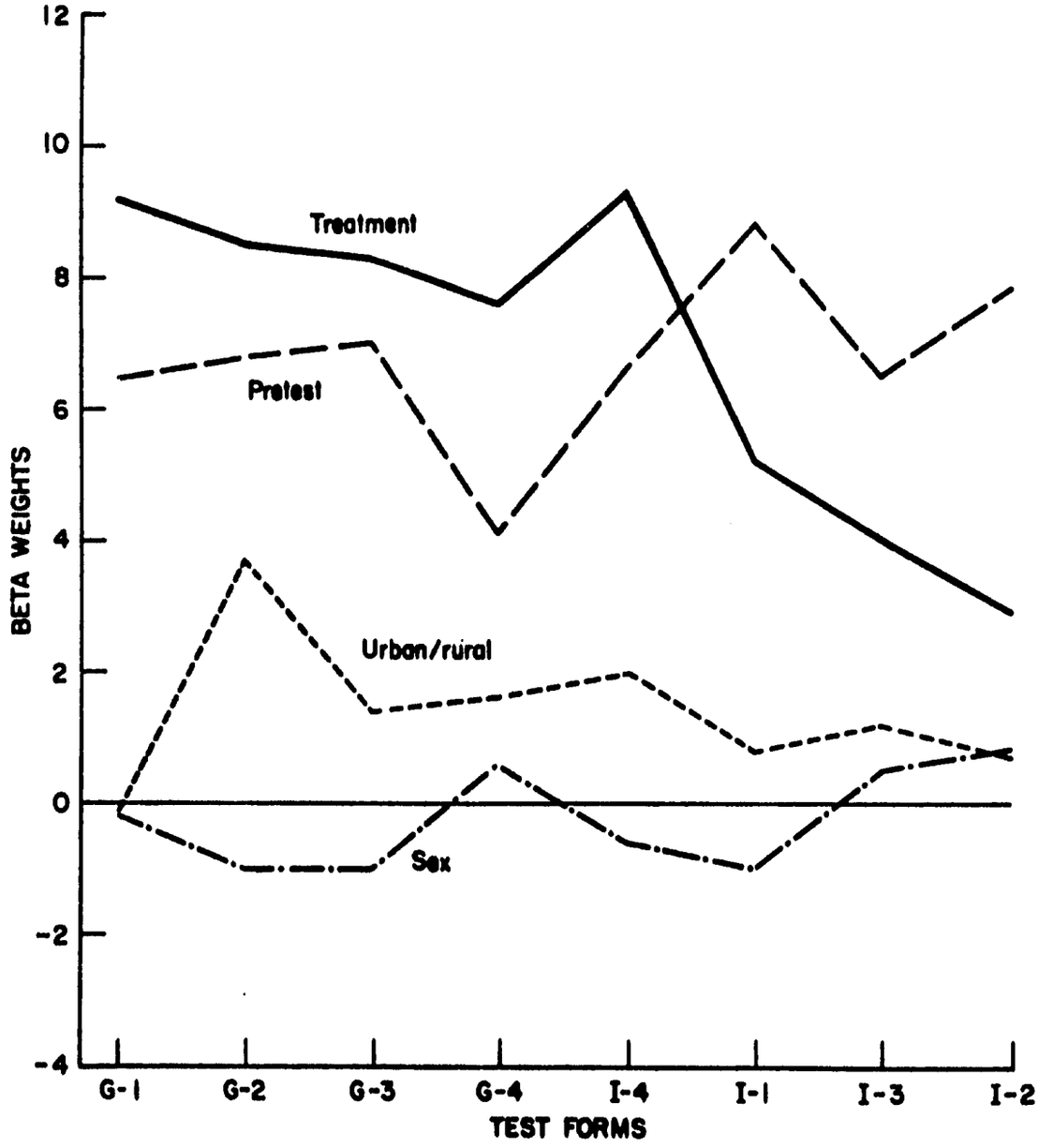

Figure 3. Regression beta weights plotted across G and I test forms.

The actual magnitudes of effects can be judged from the values of the regression coefficients in Tables 13 and 14. For example, the effect of the radio program is to raise posttest scores roughly 3.0 items for G forms and form I-4, 1.7 items for forms I-1 and I-3, and 1.0 items for form I-2.

Within the experimental group, classrooms differed with respect to the intensity of participation in the experimental program. Some classrooms used the radio broadcasts infrequently, others on a regular basis, and some were used in the weekly testing program. Taking these factors into account three groups were identified as follows:

a. low use - irregular use of radio broadcasts and supplementary project materials

b. regular use - use of radio broadcasts as intended by the project

c. weekly testing - regular use with supplementary testing.

Given a beneficial effect of the experimental program it would be expected that regular use is superior to low use. Also test-taking experience would be expected to improve posttest scores so that the weekly testing group would be expected to be superior to the regular use group.

Table 15 presents mean residuals and approximate F-ratio statistics for G and I test forms. For I test forms the mean residuals indicate effects in the expected direction with the regular-plus-testing group doing better than predicted by the regression and the low-use group doing worse than predicted with the regular-use group in between; the F statistic for the I test forms is significant ($p<.05$). For G test forms the weekly testing group does better than predicted while both the low-use and regular-use groups perform about as predicted; the magnitude of the F statistic is not significant. Note that the magnitude of the mean residuals ranges from .028 to .446 compared with a main effect of treatment on the order of from 1.0 to 3.0 items, so that conclusions about the impact of the experimental program are not substantially modified by consideration of variations within the experimental group.

We turn now to an examination of performance on the topics that comprise the first-grade curriculum (described fully in Searle et al., 1976). Posttest item scores for experimental and control students are presented in Table A of Appendix B. The results are summarized in Table 16. The mean item score for the experimental group (65.6%) is approximately 25 percentage points higher than the mean score for the control group. These results are for all children who were posttested.

The comparison of scores by topic for experimental and control students, presented in Table 17, indicates that the gains for the experimental students are consistent over topics. The results for three

Table 15

Mean Regression Residuals for Treatment Subgroups

Treatment	Mean residual	N	F	df	p
	Test Form G				
Low use	.089	120			
Regular use	.093	132	1.04	2, 351	ns
Weekly testing	-.224	102			
	Test Form I				
Low use	.446	120			
Regular use	-.149	132	3.48	2, 351	<.05
Weekly testing	-.332	102			
	Test Forms G & I				
Low use	.267	240			
Regular use	-.028	264			
Weekly testing	-.278	204			

Table 16

Descriptive Statistics for 1976 First-grade Posttest

Descriptor	Experimental	Control
Number of classes	30	23
Number of students	571	438
Number of test items	84	84
Mean item score (% correct)	65.6	40.6
Standard deviation	19.9	18.9
95% confidence interval about mean	61.3 - 70.0	36.5 - 44.7

Table 17

Comparison of 1976 First-grade Posttest Scores of Experimental and Control Students by Topic

Topic	Number of items	Mean percentage correct		
		Experimental	Control	Difference
Numeration	22	63.2	46.5	16.7
Fractions	4	78.5	32.5	46.0
Oral addition	6	73.4	35.8	37.6
Vertical addition	9	61.4	42.8	18.6
Horizontal addition	6	62.1	32.5	29.6
Oral subtraction	4	67.4	28.8	38.6
Vertical subtraction	9	47.0	22.6	24.4
Horizontal subtraction	3	48.8	22.5	26.3
Money	7	71.6	51.2	20.4
Time	1	68.1	14.7	53.4
Length	1	85.4	56.4	29.0
Oral problems	6	83.7	52.7	31.0
Basic concepts	3	86.6	64.6	22.0
Geometry	1	66.5	79.1	-12.6
Multiplication	2	29.6	27.8	1.8

topics require special mention. These three--basic concepts, geometry, and multiplication--were not taught by the radio lessons. The basic concepts topic includes comparisons of size (which is taller, shorter, wider, narrower), weight (which is heavier, lighter) and so on. The pretest results indicated that entering first-grade students knew these concepts quite well and therefore further practice was not included in the instructional program. As explained earlier, multiplication was not taught because the project staff thought the topic too difficult for first-grade students. The small amount of geometry in the curriculum guide was difficult to teach by radio and was left to the teachers.

The radio lessons seem to be especially successful with oral topics--oral addition, oral subtraction, and oral word problems. For these three topics the difference between experimental and control groups is greater than 30 percentage points. This result is not surprising, since the radio instructional program gives such heavy emphasis to oral presentations, but we feel it is of particular importance in a setting such as rural Nicaragua, where most transactions are oral.

We summarize here some of the salient aspects of the evaluation.

a. The experimental program was implemented without support from project staff in Nicaragua beyond the preparation and distribution of materials. Teachers were unsupervised, although they probably felt an obligation to use the radio lessons because they had been directed to do so by their School Inspectors.

b. The mean posttest item score for the experimental group was approximately 25 percentage points higher than the mean item score for the control group. This difference was highly significant ($p<.001$) both before and after adjusting the means of the two groups for effects of pretest and urban/rural classrooms.

c. Regressions of posttest scores on several independent variables indicated highly significant effects of the treatment variable and pretest score, a significant effect of urban/rural classrooms, but no significant effect of the sex of the student.

5. Assessment of teacher attitudes. As part of the evaluation efforts of the project, a questionnaire, designed to examine teacher attitudes toward radio instruction and related topics, was administered at the end of the 1976 school year to all teachers of first-grade experimental and control classes.

The questionnaire has four sections. The first consists of two open-ended sentences that call for completion and the last section asks for background information. The remainder of the questionnaire contains 50 statements with a five-point agree-disagree scale, displayed in the following form:

¡Sí!	Sí	?	No	¡No!

The second section uses this format to solicit attitudes on mathematics, the teaching of mathematics, and teaching as a profession. The third section is devoted entirely to radio instruction. Teachers of experimental classes were asked to reflect on their actual experiences

with the radio lessons; teachers of control classes were given a description of the project and were asked to respond according to their expectations. The full text of the questionnaire (in Spanish), including instructions to teachers, is given in Appendix C.

Questionnaires were returned by all 30 teachers of experimental classes and by 21 of the 24 teachers of control classes. Although they were not asked to write their names on the questionnaire, teachers were told that the answer forms were identified by code and that the results were not anonymous.

We first summarize the responses to the open-ended sentences, then discuss the agree-disagree statements. Finally, we describe briefly the background information obtained about teachers and summarize the results.

Section I of the questionnaire contained two incomplete sentences about using radio for instruction:

1. When I think about the possibility of using radio instruction to help me teach I .....

2. What I fear most in using radio lessons to teach mathematics is.....

Using the actual responses as a guide, a list of categories was developed for coding each of the sentence completions. Each category was characterized, if possible, as positive, neutral, or negative. The distribution of responses along the positive-negative dimension is shown in Table 18. The 51 teachers made 75 responses in completing statement 1 and 61 responses in completing statement 2. (In six cases, no response was made.) For both the experimental and control groups there were three times as many positive as negative responses to statement 1. Statement 2 solicited a negative response, and very few completions were not of this character.

Table 19 lists the responses made by two or more teachers, in order of frequency. Because the list contains responses for both statements, there are many negative comments. The most frequent comment is, "Radio lessons help the children learn." Among the other positive comments occurring frequently are "Radio lessons motivate children and make them more interested in class" and "Radio lessons help the teacher." Among the most frequent negative comments are "Radio lessons are difficult and/or of limited benefit to the children," "The children will not be interested in or motivated by radio lessons," and "Children who are absent frequently won't be able to follow the lessons." The comments in Table 19 represent approximately 80% of the responses recorded. Several teachers of control classes indicated that they were unable to respond because they needed more information.

At the end of the questionnaire the teachers were asked to make additional comments. More than 70% of the experimental group and just

Table 18

Classification of Teacher Responses to Open-ended Statements

Direction of response	Number of Teachers		
	Experimental[a]	Control[b]	Total
	Statement 1		
Positive	31	15	46
Neutral	4	4	8
Negative	10	5	15
Unclassifiable	1	5	6
No response	3	1	4
Total	49	30	79
	Statement 2		
Negative	29	28	57
Other	4	0	4
No response	2	0	2
Total	35	28	63

[a](N = 30).

[b](N = 21).

under half of the control group did so. These remarks were coded using the categories developed for the open-ended statements. The distribution of negative and positive remarks is shown in Table 20. For the most part these remarks were parallel to those reported above. The major comment for both groups was that the radio lessons would motivate the children and make them interested in the classes. Some experimental teachers thought that the radio lessons were easier for the teacher or the children or both, and that the lessons helped the children learn mathematics. Some control teachers expressed interest in participating. The major negative comments for the experimental teachers were that the mathematics content of the lessons was not adequate (because multiplication was not taught) and that radio lessons cannot accommodate children of

Table 19

Teachers' Responses to Open-ended Statements

Synopsis of comment[a]	Number of teachers		
	Experimental	Control	Total
RL help children learn	7	6	13
RL are difficult and/or of limited benefit	5	6	11
RL motivate children and make them more interested in class	8	2	10
RL help the teacher	4	4	8
Children who are absent frequently won't be able to follow the lessons	4	3	7
Children will not be interested in or motivated by RL	2	5	7
RL can't accommodate children of different abilities	5	2	7
Children don't have the ability to listen	2	4	6
The mathematics content of the lessons is not adequate	6	0	6
The radio lessons are interrupted frequently	4	1	5
RL are easier for the teacher and/or children	3	1	4
The program should continue	3	0	3
Teachers won't receive materials	1	2	3
Lessons are boring, mechanized	2	1	3
RL are difficult when there is more than one grade in the classroom	0	2	2
RL are a help in general	2	0	2
Children will have problems when changing from one school to another	2	0	2

[a]RL = radio lessons.

Table 20

Classification of Teacher Remarks on Questionnaire

Direction of response	Number of teachers		
	Experimental	Control	Total
Positive	22	6	28
Neutral	2	1	3
Negative	17	5	22
Total	41	12	53

different abilities. Of major concern to some control teachers, and to a lesser extent to experimental teachers, was that the lessons would be difficult for the children and of limited benefit to them.

The statements used to elicit agreement or disagreement (Sections II and III) were presented in both positive and negative constructions. In addition, the statements were framed to elicit both positive and negative attitudes about the topic under consideration. In order to compare the responses to different but related questions, the responses were coded in such a way that a positive attitude toward the issue was given a high score. Thus, statements framed so that agreement indicated a positive attitude were scored from 5 for !Si! to 1 for !No!; statements framed so that agreement indicated a negative attitude were scored from 1 to 5. For example, consider the first two questions (A-1 and A-2) in Table 21. Strong agreement with the first statement, "Radio instruction will bore children," was scored 1. Strong agreement with the second statement, "Children will find radio instruction exciting," was scored 5. The direction of scoring for each question is shown in the table in the column labeled "+."

Using the scoring method described, we can compare the responses to groups of statements. Thus, in the example mentioned above, we see that the teachers' responses were consistent. The mean score for the experimental group was 4.4 for both statements; the mean score for the control group was 3.6 for the first statement and 4.1 for the second.

In discussing the results we first examine the mean scores for individual items and comment on those for which the difference between experimental and control teachers is greater than .5. Then we examine the statements to which teachers responded either strongly negatively or strongly positively. For this purpose we consider those scores that are within .5 of the overall mean (3.60) to be neutral, those above 4.1 to be positive, and those below 3.1 to be negative.

Table 21

Teacher Responses to Topic of Radio Instruction

Topic code	Question[a]	+[b]	Mean score Experimental	Control
A-1	RI will bore children	D	4.4	3.6
A-2	Children will find RI exciting	A	4.4	4.1
B-1	RI doesn't offer sufficient activity for children	D	3.7	2.8
B-2	RI will make children more passive in class	D	3.4	2.6
C-1	I would like to use RI in my classroom	A	4.2	4.2
C-2	I hope never to use RI in my classroom	D	4.1	3.8
D-1	It will be easy to RI in my classroom	A	4.1	3.7
D-2	Teachers will be able to rest a little while using RI	A	2.3	2.7
D-3	RI will reduce the teacher's work	A	2.6	2.6
E-1	I would teach better without RI	D	3.9	3.5
E-2	Children would learn more without RI	D	3.9	3.4
E-3	RI is not very effective	D	3.6	3.4
F-1	RI would help parents become more interested in their children's education	A	3.5	3.7
G-1	Using RI will help teachers improve their teaching	A	4.5	3.9
G-2	RI will help the teacher better organize her lessons	A	4.4	4.0
G-3	RI will help the teacher develop more mathematics topics during year	A	3.4	3.3

(Table 21, continued)

Topic code	Question[a]	+[b]	Mean score Experimental	Control
H-1	RI will not benefit children because they cannot listen well	D	3.6	3.2
I-1	A fixed broadcast schedule will not give teacher sufficient flexibility to best teach her class	D	3.5	3.2
J-1	RI would diminish the importance of the teacher	D	4.3	3.9
K-1	RI can make use of visual materials	A	4.2	4.1
K-2	I think children can work with manipulable materials during RI	A	4.4	4.0
L-1	RI will interfere with personal relationships between teacher and children	D	4.1	3.9
M-1	The problem with RI is that it cannot adjust itself to the different rates at which children learn	D	2.2	2.0
N-1	A serious obstacle with RI is that children cannot ask questions	D	2.9	2.5
O-1	RI will help teacher develop better ways of evaluating the pupils	A	4.5	3.8

[a]RI = radio instruction.

[b]"D" signifies that disagreement was scored positively; "A" signifies that agreement was scored positively.

The 50 statements in the questionnaire are presented in three tables: 25 statements directly related to radio instruction are presented in Table 21; 19 statements about teaching and about mathematics are presented in Table 22; and the remaining 6 statements, which ask

the teachers to compare their experiences in the present year with those of the previous year, are presented in Table 23. The wording of the statements shown in the tables is a paraphrase of the Spanish; the statements are not presented in the order in which they appeared on the questionnaire.

Table 22

Teacher Responses to Topics of Mathematics and Teaching

Topic code	Question	+[a]	Mean score Experimental	Mean score Control
P-1	Most children like mathematics	A	3.7	3.1
P-2	Children like social studies more than mathematics	D	3.0	2.8
Q-1	Most children find mathematics an easy subject	A	2.8	2.4
Q-2	Most children find that mathematics is the most difficult subject	D	3.0	2.8
R-1	In private life I enjoy solving problems that require the application of mathematics	A	3.9	4.0
S-1	Mathematics is too difficult	D	3.8	4.0
S-2	I understand mathematics more easily than other subjects	A	3.4	4.0
T-1	I feel good when teaching mathematics	A	4.5	4.1
U-1	I feel more sure of myself teaching social studies than mathematics	D	4.0	3.8
U-2	I feel more sure of myself teaching mathematics than any other subject	A	3.2	4.1
V-1	Simple materials help children learn mathematical concepts	A	4.6	4.8

(Table 22, continued)

Topic code	Question		Mean score Experimental	Control
W-1	In school, mathematics is more important than any other subject	A	3.2	3.4
W-2	Of all school subjects mathematics mathematics is the principal cause of failure	D	3.6	2.9
X-1	It is easy to teach mathematics	A	3.7	3.8
X-2	It is more difficult to teach math than any other subject	D	3.5	3.6
Y-1	It takes more time to prepare for a social studies class than a mathematics class	A	2.2	2.9
Z-1	Teaching is a profession that does not offer much satisfaction	D	4.0	3.8
Z-2	I would encourage my best students to become teachers	A	3.2	3.0
Z-3	I would remain in teaching even though offered other work with more remuneration	A	3.6	3.2

[a]"D" signifies that disagreement was scored positively; "A" signifies that agreement was scored positively.

The mean scores for experimental and control teachers for each statement are also shown in Tables 21, 22, and 23. The overall mean score for the experimental group is 3.76 (s.d. = .67) and for the control group, 3.44 (s.d. = .60). The difference between the means is not statistically significant.

Table 24 presents the patterns of responses of teachers in the experimental and control groups to all of the agree-disagree statements. The teachers responded negatively to a relatively small proportion of the statements--23% and 20% for experimental and control teachers, respectively. The two groups differ substantially in the proportion of statements to which they indicated a neutral attitude; control teachers gave neutral responses three times as often as experimental teachers. The larger proportion of neutral responses made by the control group is

Table 23

Teacher Comparison of Experiences in 1975 and 1976

Topic code	Question	+[a]	Mean score Experimental	Control
AA-1	My students liked mathematics more this year than last year	A	4.4	3.7
AA-2	My students found mathematics more difficult this year than last year	D	4.4	3.7
AA-3	I have enjoyed teaching mathematics more this year than last year	A	4.5	3.9
AA-4	My confidence in teaching math has been greater this year than last year	A	4.0	4.0
AA-5	It has been more difficult to teach mathematics this year than last year	D	4.3	4.0
AA-6	It took more time to prepare for a mathematics class this year than last year	D	3.7	3.9

[a]"D" signifies that disagreement was scored positively; "A" signifies that agreement was scored positively.

balanced by the relatively small proportion of strongly positive responses.

One would suspect that the neutral responses of the control teachers would occur more frequently to statements dealing with radio instruction (Section III), with which the teachers had no direct experience. The data in Table 25, which presents score frequencies separately for the two sections of the questionnaire, support this supposition. Nevertheless, the proportion of neutral responses is higher for the control teachers even on those statements related to their own experience.

Table 21 (mentioned earlier), which reports responses to the topic of radio instruction, shows five questions for which the difference in score between experimental and control teachers is more

Table 24

Distribution of Responses to Agree-disagree Statements

	Experimental teachers		Control teachers	
Score	Number of responses	Proportion	Number of responses	Proportion
1	121	.08	64	.06
2	225	.15	141	.14
3	102	.07	228	.22
4	540	.37	385	.37
5	484	.33	212	.21

Table 25

Comparison of Responses to Sections II and III of Questionnaire

	Proportion of responses			
	Section II		Section III	
Score	Experimental teachers	Control teachers	Experimental teachers	Control teachers
1	.08	.07	.08	.06
2	.18	.13	.13	.14
3	.06	.17	.08	.28
4	.36	.39	.37	.36
5	.32	.24	.34	.17

than .5. These questions are A-1, B-1, B-2, G-1, and O-1. In each case, the score for the experimental group is higher. Thus, experimental teachers expect radio instruction to be less boring to children (A-1) and expect the children to be less passive (B-1, B-2) than do control teachers. Furthermore, the experimental teachers more strongly see

radio instruction as a means for improving their own teaching (G-1) and as a help in developing better ways to evaluate children's work (O-1).

The experimental teachers expressed agreement with the following positive attitudes toward radio instruction (i.e., the mean score on the relevant statements was greater than 4.1).

1. Children like radio lessons.
2. Teachers like to use radio lessons.
3. Radio lessons can help teachers improve their teaching methods.
4. Radio lessons can help teachers improve their methods of evaluation.
5. Radio lessons will not diminish the role of the teacher.
6. Visual and manipulable materials can be incorporated into radio lessons.

The control teachers responded positively only to the second item in this list.

The experimental teachers expressed agreement with the following negative attitudes toward radio instruction.

1. Radio lessons will not reduce the teacher's work.
2. Radio lessons cannot accommodate the different ability levels of children.
3. Radio lessons do not allow the children to ask questions.

The control teachers agreed with these three points and also felt that radio lessons will cause the children to be passive. In summary, the experimental teachers have a more positive view of the benefits of using radio for instruction but are in close agreement with control teachers on some of the major drawbacks associated with radio instruction. The one difference between the groups--regarding passivity--surely reflects the experimental teachers' experiences with the radio mathematics lessons, which maintain a high level of student activity.

Table 22 reports the attitude scores for statements about mathematics as a subject, the teaching of mathematics, and teaching as a profession. There are five statements for which the scores for the two groups differ by more than .5: P-1, S-2, U-2, W-2, and Y-1. The experimental teachers are more in agreement that children like mathematics (P-1) and that mathematics is not the principal cause of failure in school (W-2). Such responses might reflect a more positive attitude of the students toward the radio mathematics lessons. On the other hand, the control teachers feel more confident about their knowledge of and ability to teach mathematics (S-2 and U-2) than do the experimental teachers. Perhaps the lower level of confidence of the experimental teachers results from their exposure to the instructional methods of the radio mathematics program, which are probably new to them. The final result about preparation time (Y-1) is expected because teachers of radio classes have relatively little to prepare for the typical radio lesson.

Both groups of teachers strongly agree that simple materials help children learn mathematics. The experimental group reported feeling good about teaching mathematics. On the negative side, both groups agree that children find mathematics a difficult subject and that it takes more time to prepare for a mathematics class than for a social studies class. Control-group teachers see mathematics as a principal cause of failure and would not recommend teaching as a profession to their best students.

The teachers were asked to compare their experiences in 1976 with those of the previous year. For teachers of experimental classes this meant a comparison between using radio and not using radio. The results are presented in Table 23. There are strong differences between the two groups on the first three statements. Thus, the experimental teachers report that students liked mathematics more and found it easier (AA-1, AA-2) this year than last year, and that they themselves enjoyed teaching mathematics more (AA-3). The responses of the control teachers were neutral for these items. For the remaining three items, which dealt with other aspects of the teaching of mathematics, the responses of the experimental teachers were less positive and there were no strong differences between the two groups of teachers.

The three major sources of information about the teachers' attitudes towards radio instruction in general and towards the radio mathematics lessons in particular were the incomplete sentences of Section I, the agree-disagree statements of Sections II and II, and the general comments at the end of the questionnaire. We summarize here the teachers' attitudes by listing those issues or statements for which at least two of the three information sources provided support.

The experimental group had positive attitudes in the following areas:

1. The radio lessons help the children to learn.
2. The lessons help the teacher.
3. The lessons motivate the children and make the class more interesting.
4. The lessons make it easier for the children and/or teacher.

The experimental group responded negatively in the following two areas:

1. The mathematics content of the lessons was not sufficient; the teachers would normally cover more material during the year.
2. The radio lessons cannot adjust to the different abilities of the children.

The control group also expressed both positive and negative comments quite consistently. Their positive comments were:

1. They would like to participate in using the radio lessons.
2. The lessons would motivate the children and make the classes more interesting.

Their major negative comments were:

1. The lessons would be difficult for the children or would be of limited benefit.
2. The radio lessons cannot adjust to the different abilities of the children.

B. Grade 2 Program

1. Operation in the schools. Forty classes in the departments of Masaya, Granada, and Carazo--with a matriculation of 1410 children--used the Grade 2 program. Twenty of these classes were used by the project for weekly testing or classroom observations. This group of classes was not randomly selected. Rather, we followed the same procedure used in 1975 for first grade, choosing classrooms that were convenient to the office but that represented a wide range of situations normally found in surrounding departments. There were, for example, classes taught by teachers rated as good and as poor by the School Inspector, there were classrooms with more than one grade in the same room, there were rural schools and urban schools, and so on. Three of the classes were composed mostly of students who had used the radio program in first-grade during 1975. All project activities were conducted with this first group of 20 classes. The remaining 20 classes were taught by volunteer teachers, most of whom had worked with the project before, and all of whom requested permission to use the lessons.

The implementation of the second-grade program was described in the last annual report. We add only a few notes here. Twelve classes were used for the weekly testing program that was conducted in the same way as that for first grade. Tests were administered during 26 weeks of the 33-week school year. Five classrooms were observed regularly and altogether 425 observations were reported. The schedule for classroom observation was described in the section on first grade.

Forty-four second-grade classes were given both a pretest and a posttest---the 20 radio classes being used for experimental purposes and 24 randomly-selected control classes. The experimental design was like that used in 1975, the first year the first-grade curriculum was used in schools. That is, the radio group was not randomly selected but the control group was. Unfortunately, an error was made in the distribution of posttest forms among classrooms. Of the five G forms of the test, the radio group received only three. The control group received only one of these and the remaining two forms. Thus, for oral items contained in the G forms of the test there was almost no overlap in the items taken by the two groups, making a comparison between them impossible. Of the 125 items on the test, a comparison was possible for 83. The results are described in a later section.

2. The curriculum. The Grade 2 curriculum was based as closely as we felt possible on the curriculum specifications of the Ministry of Public Education. The Ministry guide identifies eight units: sets, systems of numeration, addition and subtraction, multiplication and division, common fractions, money, measurement, and geometry. As with the first-grade curriculum, we deviated in three respects from the curriculum guide. First, we incorporated the set concepts of the first unit directly into the work on numeration and the four operations. Second, we did not teach the relatively small amount of material on geometry, but recommended to the teachers that they do this. And third, we changed substantially the manner of presentation of material. The Ministry guide, although it does not explicitly require that teachers follow the sequence of topics as they are presented in the guide, clearly encourages them to do so. Furthermore, once a unit has been taught, there is no provision for review. As is clear from earlier discussions of lesson structure, the project takes a different view of the organization of the curriculum; all topics are presented throughout the year and there is extensive interweaving of teaching, practice, and review.

Although constructed with the same underlying philosophy, the second-grade curriculum plan was more explicit and more detailed than the first grade plan. First, the curriculum content was divided into 28 strands. A list of these is presented in Table 26, where they are grouped into topics at a level of aggregation more like that used by the Ministry curriculum guide. (Thus, the 28 strands are grouped into 9 topics.) Each strand was then divided into classes of exercises, each of which has an explicit definition in terms of the characteristics of the exercise and the type of response asked for. A set of typical class descriptions is shown in Table 27. The number of classes in a strand varied from 1 for CH to 39 for SV; the full curriculum was described using 270 classes. The relationship between exercise classes was given explicitly as a hierarchical (prerequisite) structure in which the prerequisites for each class were shown in graphical form. A segment of the hierarchical structure for vertical subtraction is shown in Figure 4. In the figure each digit of a subtraction exercise is represented by an X, an arrow represents a borrow, and a 0 in the difference occurs when the result of the subtraction in that column (after any required borrows) must be zero.

In general, "prerequisite" is defined as follows. Class A is said to be prerequisite to Class B if Class A must be taught first in time. This rather weak relationship is strengthened in the case of a "key" prerequisite. If Class A is a key prerequisite of Class B then Class A must not only be taught first but also must be "mastered." Mastery is defined in terms of proportion correct on test items and the exact level of mastery is dependent upon the characters of both A and B.

We designate a class as a key prerequisite if two criteria are satisfied. First, on the basis of a task analysis, mastery of the type of exercise contained in the class must be essential to learning the skill represented by the next class. Second, the class must not be

Table 26

Topics and Strands Comprising the Second Grade Curriculum

Strand Identifier	Strand Description
NC	Counting
NE	Reading and writing whole numbers
OR	Ordinal numbers
FR	Reading and writing fractions
AO	Addition exercises presented orally
AH	Addition exercises in horizontal format
AV	Addition exercises in vertical format
SO	Subtraction exercises presented orally
SH	Subtraction exercises in horizontal format
SV	Subtraction exercises in vertical format
CO	Oral exercises that use both addition and subtraction (e.g. 2+3-1)
CH	Combined exercises in horizontal format
MO	Multiplication exercises presented orally
MH	Multiplication exercises in horizontal format
MV	Multiplication exercises in vertical format
DO	Division exercises presented orally
DV	Division exercises using long division format
AF	Addition of fractions
SF	Subtraction of fractions
PA	Word problems using addition, presented orally
PS	Word problems using subtraction, presented orally
PM	Word problems using multiplication, presented orally
PD	Word problems using division, presented orally
MB	Money
MT	Time
ML	Length
MP	Weight
MC	Volume

Table 27

Sample Exercise Class Definitions from Second Grade Curriculum[a]

Class Identifier	Class Description[b]	Example
AO 2	a + b: sum less than 11	"How much is 2 plus 7?"
AO 3	a + b + c, a + b + c + d: sum less than 11	"How much is 3 plus 1 plus 1 plus 2?"
AO 8	ab + c: sum less than 100, no carry	"How much is 25 plus 3?"
SO 1	a - b	"How much is 6 minus 3?"
SO 2	M - b: M is from 10 to 18	"How much is 17 minus 9?"
SO 3	ab - b: answer has 0 in units place	"How much is 42 minus 2?"
SO 9	a0 - 1: a0 is a multiple of 10	"How much is 50 minus 1?"
MO 1	a x b: product is less than 10	"How much is 2 times 3?"
MO 2	a0 x b: a x b is less than 10	"How much is 20 times 3?"
MO 3	a00 x b: a x b is less than 10	"How much is 200 times 3?"
MO 4	a x b: product is less than 25	"How much is 4 times 5?"
MO 5	a x b: product is less than 81	"How much is 6 times 8?"
MO 6	a x 0, 0 x a	"How much is 7 times 0?"
DO 1	a/b: a is less than 10 and a multiple of b	"How much is 9 divided by 3?"
DO 2	ab/c: c is 2, 3, 4, or 5, and ab is a multiple of c	"How much is 24 divided by 4?"

[a]All classes of oral items used for weekly tests.

[b]Lower case letters are used to represent single digits. These class descriptions are given using more precise mathematical notation in project documentation; less formal descriptions are used here for convenience.

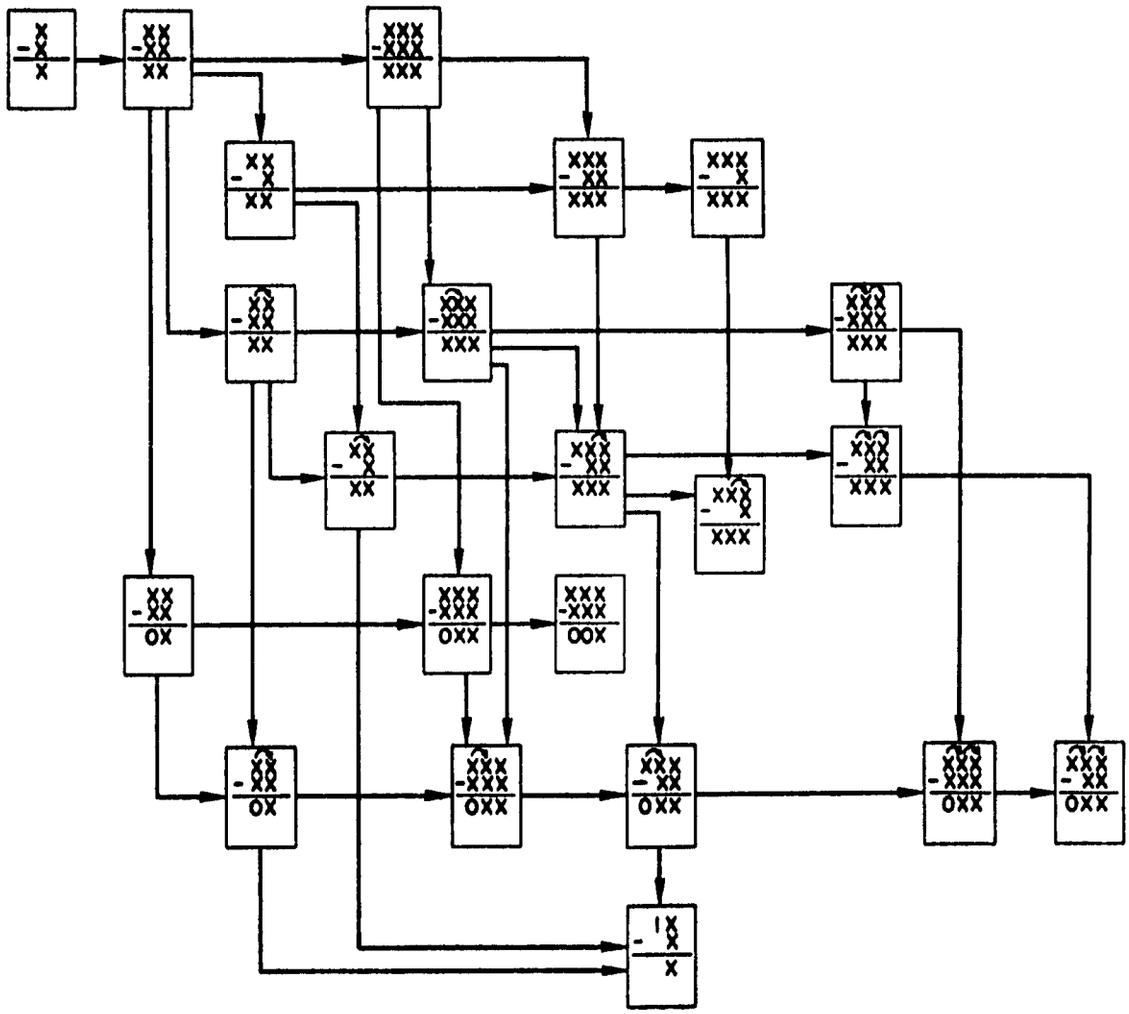

Figure 4. Portion of the curriculum plan for vertical subtraction showing prerequisite structure of exercise classes. (Notation is explaned in the text.)

one which we suspect, from prior experience, the children will do well on. From systematic testing before and after teaching we have learned that children perform well on many types of exercises even before explicit teaching has taken place. (This evidence will be discussed more fully in a forthcoming project publication.) We do not designate such exercise classes as key prerequisites even though mastery is essential for progress, because we do not feel it is necessary to assess performance on these classes. Thus, the definition of "key" prerequisite used in formulating the curriculum plan has both a logical and a pragmatic component. The latter is very important because it is necessary to limit the number of classes designated as key prerequisites. Of course we would like the children to master all prerequisites. However, the restraints of production make it impossible to tie curriculum development to mastery of more than a few prerequisites. If A is a key prerequisite for B, we must schedule sufficient time between the teaching of A and B so that we can test for mastery after A is taught and before B is written. If A is not mastered we must revise the schedule to correct for deficiencies in the instructional sequence. On our tightest production schedule, the elapsed time between A and B must be at least four weeks: the time it takes to test, analyze the results, then plan, write, and record the lessons.

Each exercise class forms the basis for one or more lesson segments that is used to teach and practice the exercises in the class. Table 28 shows the distribution of lesson segments among topics in the second-grade curriculum. Of the 2,141 lesson segments, 68% occurred in the recorded portion of the lesson, 28% in the postbroadcast portion. A small percentage of the segments is designated "transition" because the radio teacher introduces the work to the children and asks them to continue when the radio program is finished. A lesson segment may contain from 1 to 10 exercises (occasionally more). The distribution of exercises among topics is shown in Table 29. More than 80% of the 8,326 exercises in the curriculum are from the four major topics of numeration, addition, subtraction, and multiplication.

3. The instructional program. The second-grade instructional program consists of 175 lessons, each with a recorded portion and a teachers' guide describing a postbroadcast portion. The only other supplementary material produced by the project is a set of 22 9x12 posters for use in teaching fraction concepts and the concept of area. Each classroom is given one set of posters. All other illustrative materials are drawn either by the teacher on the blackboard or by the children in their notebooks; there are no student worksheets. The rationale for eliminating worksheets and a discussion of our success in implementing that change are presented in a later section of this report that contrasts the instructional programs for Grades 1, 2, and 3.

The lessons for second grade are similar in format to those for first grade. Lessons have, on the average, twelve mathematics segments and five entertainment segments. We will discuss these two types of segments separately.

Table 28

Distribution of Segments among Mathematical Topics in the Second-grade Curriculum

Topic	Number of Segments			
	Recorded	Transition	Postbroadcast	Total
Numeration	243	0	117	360
Addition	339	37	192	568
Subtraction	356	24	129	509
Addition & subtraction combined	12	1	2	15
Multiplication	232	16	59	307
Division	80	7	18	105
Operations with fractions	43	0	0	43
Word problems	111	0	6	117
Measurement	33	0	84	117
Total	1,449	85	607	2,141
Percentage	68%	4%	28%	

As shown in Table 28, approximately two-thirds of the mathematics segments occur in the recorded portion of the lesson. These segments ask three major types of responses from the children--delayed oral, immediate oral, and written responses. Occasionally, physical responses are required as well. Immediate oral responses and written responses are straightforward, but the delayed-response type needs some discussion. A request for a delayed oral response has two parts. The first part asks the children to think of the answer, the second part asks them to give it. For example,

> "Think, how much is twenty-six minus two?"
> (Pause--6 seconds)
> "How much is it?"

The children are taught not to speak aloud until they are asked to respond in the second part.

Table 29

Distribution of Exercises Among Mathematical Topics in the Second-grade Curriculum

Topic	Number of exercises	Proportion of exercises
Numeration	1,679	.20
Addition	2,018	.24
Subtraction	1,829	.22
Addition and subtraction	76	.01
Multiplication	1,626	.20
Division	377	.05
Operations with fractions	131	.02
Word problems	327	.04
Measurement	263	.03
Total	8,326	

Table 30 presents data about the number of exercises and responses required of students for 10 lessons. The lessons included in Table 30 represent different stages in the normal teaching sequence, which occurs in blocks of five lessons. Thus, lessons 21 and 101 are at the beginning of a teaching sequence, lessons 65 and 145 at the end, when new material has been introduced and is being practiced. The table shows no clear pattern of responses associated with this progression through the teaching sequence except that the number of immediate oral responses is highest at the outset and decreases.

The lessons used to compile Table 30 were chosen from both the early and the late parts of the instructional program. Table 31 presents a comparison of these early and late lessons. The mean number of exercises is lower for the late lessons, but the mean number of all types of responses and the proportion of written responses has increased. Thus, the later lessons have fewer exercises each of which requires more responses, probably because the exercises are more complicated.

Table 30

Frequency of Response Types for Mathematical Exercises
Selected Grade 2 Lessons

		Number of Responses				
Lesson number	Number of exercises	Physical	Delayed	Immediate oral	Written oral	Total
21	32	11	12	64	19	106
32	33	0	9	59	22	90
43	34	0	10	44	17	71
54	37	0	32	53	23	108
65	36	0	16	51	27	94
101	32	0	4	116	34	154
112	30	0	10	96	51	157
123	25	0	14	70	37	121
134	16	0	16	60	36	112
145	24	0	7	50	32	89

Table 31

Comparison of Response Frequencies for Early and Late Grade 2 Lessons

Characteristic	Early[a]	Late[b]
Total number of exercises	172	127
Mean number of exercises per lesson	34.4	25.4
Total number of responses	469	633
Mean number of responses per exercise	2.7	5.0
Total number of written responses	108	190
Percentage of written responses	23%	30%

[a]Early: Lessons 21, 32, 43, 54, 65.

[b]Late: Lessons 101,112,123,134,145.

For the lessons used to compile Table 30, the number of mathematics exercises ranges from 16 to 37; the number of student responses called for to work these exercises ranges from 71 to 157. Some exercises call for only a single response, others for as many as 17 responses. The following is an example of the dialogue for an exercise requiring 15 student responses. The portion of dialogue we give here was translated from Lesson 101. The "chorus," (children's voices) responds at the same time as the children in the classroom. The lines of dialogue are numbered here for reference in the subsequent discussion.

1. Ramon: Let's look at the last exercise in the row. It is 82 minus 45. (Ramon is referring to exercises written on the blackboard.)

2. Lita: First, let's look to see if we must borrow. Look at the 2. Tell me, can we take 5 from 2?

3. Chorus: No.

4. Ramon: No, we cannot. Therefore, must we borrow?

5.	Chorus:	Yes.
6.	Lita:	Yes, we must borrow. We borrow 1 from the 8 that is next to the 2.
7.	Ramon:	8 minus 1, 7. Make an X over the 8. (Pause--2) Tell me, where are you going to write the 7?
8.	Chorus:	Above the 8.
9.	Lita:	Above the 8. Write it. (Pause--4)
10.	Ramon:	Now we must write the 1 that we borrowed. Tell me, where are we going to write it?
11.	Chorus:	In front of the 2.
12.	Lita:	In front of the 2. Write it, small. (Pause--3)
13.	Ramon:	Now, in place of 2 what do we have?
14.	Chorus:	12.
15.	Lita:	12. Now we are finished borrowing.
16.	Ramon:	Tell me, can we subtract 5 from 12?
17.	Chorus:	Yes.
18.	Lita:	Yes, of course. We can subtract 5 from 12. Now we are going to subtract. Think, how much is 12 minus 5? (Pause--5).
19.	Ramon:	How much is it?
20.	Chorus:	7.
21.	Lita:	7. Under the 5 write the 7. (Pause--4).
22.	Ramon:	Now move to the next column. Here we had 8 minus 4. What do we have now?
23.	Chorus:	7 minus 4.
24.	Ramon:	And 7 minus 4, how much is it?
25.	Chorus:	3.
26.	Lita:	3. Write it under the 4. (Pause--4).
27.	Ramon:	Look at your answer. Read it.

28. Chorus: 37.

29. Lita: 37. Good.

This dialogue takes 2 minutes, 10 seconds of lesson time. It asks for nine immediate oral responses, one delayed oral response and five written responses (about 7 responses per minute). The two parts of the delayed oral response are found in lines 18 and 19. Only a few of the immediate oral responses are numbers; most ask the children about steps in the process of working the exercise. The language used by the chorus in lines 8 and 11 has been taught to the children. Usually, the children in the classroom respond with the same words as the chorus. In most cases the children in the classroom do not hear the chorus because they are responding at the same time. Therefore, the lines spoken by the chorus cannot serve to give the children the correct answer. This function is handled explicitly by an adult character who gives the correct response to each question after it has been answered by the children.

The instruction in line 21 illustrates a rule for writing instructions: when the children are not thoroughly familiar with a process, always give a series of instructions in the order you expect a child to carry them out. In this case, the child must first find the place to write the numeral (under the 5) and then write it. Because by this lesson the children have done many subtraction exercises and are familiar with column format, this rule can be relaxed, as it is in line 26.

This dialogue illustrates the attention given in the instructional process to exercise format. In the traditional classroom, the children are expected to learn about format from observation. Thus, the position of the digits of the answer with respect to the minuend and subtrahend and the mechanics of borrowing are presumably demonstrated by the teacher. The radio teacher does not use demonstration and must rely entirely on verbal description. This has certainly proved to be one of the most difficult aspects of creating successful instructional dialogue.

The entertainment segments are of a different character than the mathematics segments and effectively serve to change the pace. The distribution of types of entertainment segments in the second-grade lessons is shown in Table 32. The 175 lessons contain 931 recorded entertainment segments, an average of 5.32 per lesson. Entertainment use was heavier during the first half of the year and tapered off during the later lessons--the mean occurrence for the first 60 lessons was 6.0 compared with 4.5 for the last 60 lessons.

More than 60% of the entertainment segments were songs and another 18% were physical games, which were used in almost every lesson. Riddles also occurred frequently--in 135 lessons. The remaining types of entertainment--jokes, recitations, bombas (traditional short poems) and tongue twisters--appeared infrequently.

Table 32

Types of Entertainment Used in Second-grade Lessons

	Number of occurrences							
Lessons	Song	Game	Riddle	Joke	Recitation	Bomba	Tongue twister	Total
1-15	34	15	11	5	2	5	1	73
16-30	54	15	14	1	5	2	0	91
31-45	65	15	15	0	2	3	0	100
46-60	67	14	11	0	1	0	0	93
61-75	46	13	9	0	0	0	0	68
76-90	54	15	14	3	2	1	3	92
91-105	61	14	10	0	0	1	2	88
106-120	34	12	9	2	0	0	2	59
121-135	37	13	13	0	1	0	2	66
136-150	44	15	11	1	2	3	2	78
151-165	39	15	11	0	2	1	2	70
166-175	30	10	7	3	0	3	0	53
Total	565	166	135	15	17	19	14	931

Although there were almost a thousand entertainment segments in the 175 lessons, these were not all unique. As shown in Table 33, the entertainment component consisted of 181 segments repeated on the average about 5 times. The repetition rate for songs and games was high, and 66 different recorded segments provided 731 occurrences, almost 80% of all the entertainment in the lessons.

The pattern of usage of different types of entertainment was determined by the children's responses to these types, as reported by classroom observers. The results of such observations for first grade were presented earlier (see pages 12-15). Each type of entertainment was presented in second grade lessons, both early and late in the year. The observations confirmed the findings about first grade, namely

Table 33

Entertainment Segments in Second-grade Lessons

Type	Total number of occurrences	Number of distinct segments	Mean usage
Songs	565	44	12.3
Games	166	22	7.5
Riddles	135	73	1.8
Jokes	15	10	1.5
Recitations	17	12	1.4
Bombas	19	13	1.5
Tongue twisters	14	7	2.0
Total	931	181	5.1

that songs, games and riddles were the most engaging activities and that the children responded much less well to the other activities. The list of entertainment activities does not include stories, which traditionally fall in this category, because their use had been discontinued before we embarked on producing second grade lessons.

4. Results. Although the second-grade students were pretested and posttested, several factors combine to make it difficult to draw conclusions from the resulting data without detailed statistical analysis, which has not yet been undertaken. The difficulties are two: the nonrandom selection of radio classes and the error made in distributing posttest forms to classrooms.

The pretest had a matrix-sampled structure with four G forms and four I forms and a total of 88 items. (The matrix-sampled test structure is described in Searle et al., 1976.) The items, with the scores attained by radio and traditional groups, are shown in Table B of Appendix B. The mean item score for the radio group was 68.9%, that for the traditional group, 57.3%. The mean for the radio group is significantly higher than that for the traditional group ($t = 3.64$, $p < .001$). This result surely supports the notion that a "representative" sample is no substitute for a random sample.

The second-grade posttest, also of matrix-sampled design, used five I forms and five G forms and contained 125 items. The test items, with the scores attained by radio and traditional groups, are shown in

Table C of Appendix B. Because of the difference in pretest scores in favor of the radio group, it would, under the best of circumstances, be difficult to interpret posttest results. The error in administration of the test compounds the problem. Table 34 compares the mean percentage correct for radio and traditional groups for each of the 10 test forms that comprise the test. The radio group scores are higher on every test form that both groups took. However, because the radio group was not randomly selected and scored higher on the pretest than the traditional group, we cannot attribute the superior performance to radio instruction.

Table 34

Comparison of Performance of Radio and Traditional Groups on the 1976 Grade 2 Posttest

	Radio Group		Traditional Group		
Test Form	n	%	n	%	Difference
G1	177	63.2	0	---	---
G2	180	76.8	0	---	---
G3	43	80.7	149	71.7	9.0
G4	0	---	205	60.0	---
G5	0	---	128	63.3	---
I1	82	70.7	95	52.4	18.3
I2	77	78.3	97	59.5	18.8
I3	82	65.5	96	50.8	14.7
I4	78	63.6	97	50.2	13.4
I5	81	74.1	97	54.6	19.5
Mean		71.2		56.8	14.4

In Table 35 we examine the attainment of curriculum objectives by students using radio instruction. On the whole, the scores are in the 70% to 80% range, which we feel is quite satisfactory. The mean score for measurement, 49.6%, is quite low. This result suggests

Table 35

Performance of Radio Students on Grade 2 Curriculum Objectives

Strand	Number of items	Mean percentage correct
Numeration	27	77.9
Oral addition	3	78.2
Horizontal addition	5	75.0
Vertical addition	10	81.9
Oral subtraction	3	72.4
Horizontal subtraction	5	73.7
Vertical subtraction	10	61.2
Oral multiplication	2	88.8
Vertical multiplication	5	81.3
Oral division	1	70.6
Vertical division	5	73.4
Operations with fractions	5	68.6
Word problems	7	70.7
Measurement	15	49.6
Geometry	2	70.5

Another comparison between the performance of radio students and traditional students was made during the year. A test of addition and subtraction skills was constructed to help us obtain information about the students' abilities at all grade levels. The full test, which had a matrix-sampling design, consisted of 150 vertical addition exercises and 150 vertical subtraction exercises. It was administered to 3000 students (500 at each grade level from 1 to 6) in Managua primary schools. (The design and application of this test will be described in full in a forthcoming report.)

Table 36

Comparison of Radio and Managua Students on Addition and Subtraction Items

	Mean Percentage Correct		
	Radio students	Managua students	
Item type	Grade 2	Grade 2	Grade 3
Addition	72.6	60.3	74.5
Subtraction	47.7	34.7	49.6

The test had 10 forms each of which contained 15 addition and 15 subtraction items. Several forms of the test were given to the second-grade radio students and their performance can be compared with that of the students in Managua. As seen in Table 36, the performance level of the radio students is much closer to that of the Grade 3 Managua students than to their Managuan counterparts in Grade 2.

THE 1977 OPERATIONAL YEAR

In 1977 the project has been broadcasting lessons at two grade levels--second and third. The second-grade lessons are those developed during 1976 with very few changes. The lessons for third grade are under development. In June the project was granted an extension of its contract with AID. As part of this extension, the contract was amended to bring the reporting schedule in line with the school schedule in Nicaragua. Thus, the next annual report for the project will be written at the close of the present school year. For this reason we report only briefly on the activities of 1977. We will comment in this section on some of the organizational aspects of the year's work. In the next major section we will compare the lessons being developed for third grade with those for second and first grades.

Two groups of experimental classes, designated experienced and nonexperienced, were chosen to receive second-grade lessons. The 24 classes in the experienced group were selected at random from the 30 randomly-selected classes that used the first-grade lessons in 1976, subject to the constraint that there be four classes in each cell of the 2x3 stratification formed by location (rural or urban) and department (Masaya, Granada, or Carazo.) (Note that these classes are likely to include some students who have either changed sections or transferred from a nonexperimental school and therefore have no prior experience with the radio lessons.)

The nonexperienced group contains 18 classes chosen from among those classes that had not worked with the project in the past. The classes chosen were stratified by location and department with three classes falling in each cell.

As with second grade, the third-grade classes were selected with and without experience. The group with experience consists of all classes that met the following requirements:

1. The school had been randomly designated as experimental. These designations were made earlier, by school without regard to grade level.

2. The class used the second-grade radio lessons in 1976.

3. The children were pretested and posttest in 1976.

Only nine schools, all in Masaya, met these requirements. One of these closed in 1977, leaving five urban and three rural schools.

The classes without experience were selected at random from the list of eligible experimental schools. Schools were eliminated

from eligibility if there were fewer than 12 students matriculated in second grade or third grade in 1976. It was necessary to include two classrooms with both second- and third-grade students (taught by the same teacher) in which the second-graders had already been chosen to receive lessons; in these classrooms, two lessons were broadcast each day.

The 24 experienced classes are distributed evenly among departments, and in each department we selected three urban and five rural schools, to arrive at more equal numbers of students, as the matriculation in the upper grades of the rural schools is much lower than in the urban schools.

The classroom-observation and weekly-testing programs for 1977 were carried on only at the third-grade level. We have no plans to revise the second-grade lessons and therefore do not need additional data about these classes. Twelve third-grade classes within reasonable commuting distance of the project office were selected for testing and observation. These were divided evenly between rural and urban schools, and two-thirds were experienced, one-third not. The experienced classes were selected from the schools that used the second-grade radio lessons in 1976 but did not qualify for participation in the third-grade experienced group described above. The classes without experience were selected from the list of schools designated as experimental but without prior experience with the project.

A set of fourth-grade control classes was also selected for pretesting and posttesting. These classes were distributed equally among the three departments, with three urban and five rural classes chosen in each department.

For implementation of the second-grade lessons, the project revised the teachers' guide and published the full guide, in two parts, for distribution to teachers. During the period from the opening of school until June 30, 79 second-grade lessons were broadcast.

At the third-grade level, during the same period, the project prepared 88 lesson plans, wrote 83 scripts, recorded and transmitted 79 lessons, wrote and reproduced 84 teacher's guides, observed lessons in the classroom approximately 175 times, administered 10 weekly tests in 12 classrooms each and operated the now standard feedback scheme that makes use of the testing and observation data in designing lessons.

Pretests were administered to second-, third-, and fourth-grade classrooms. In addition to these activities, we began planning for a revision of first-grade lessons without worksheets. (The justification for this move is discussed in the next section.)

During the early part of the year the Minister of Public Education expressed her interest in expanding the use of project lessons into the department of Rio San Juan. The project staff expressed some concern about the feasibility of starting lessons part of the way into the

school year, expecting that the children might have difficulty in following instructions and that they would not have covered enough of the prerequisite material to be able to follow the lessons. The staff therefore conducted a brief trial in a classroom near the office. Success in that setting would certainly not guarantee success in Rio San Juan, but failure in Masaya would almost certainly mean failure in Rio San Juan. Members of the staff asked the School Inspector of Masaya to recommend a rural school with at least 12 children in second and third grades. The largest of the two or three schools that met this criterion was chosen.

Taped radio lessons were presented to both second grade and third grade for three consecutive days during May, 1977. The children were given a very brief introduction: they were told that the tape recorder would give instructions about mathematics which the children were to follow, and that they would have to respond both orally and in their notebooks. Two staff members monitored the lessons and gave individual help to students who seemed to need it.

Contrary to staff expectations, the children did very well. After three days they were responding, both orally and in writing, fully as well as the average radio class that had started at the beginning of the year. However, it was clear that the school is not typical for a rural area. It is larger and has a dynamic director and dedicated and capable teachers. Nevertheless, the children learned quickly to use the program. The teachers and the children wanted to continue, and the project is supplying the teachers' guides. The radio is being provided by the school.

Although this experiment was successful it did not settle the question of using the lessons in Rio San Juan. The Minister and the project staff members agreed to delay implementation in that department until 1978.

III. COMPARISON OF INSTRUCTIONAL PROGRAMS FOR DIFFERENT GRADE LEVELS

A. Comparison of Grade 1 and Grade 2

The major difference in design between the instructional programs for first and second grade is that worksheets are not used in second grade. We do not dispute the presumption that worksheets or other individual supplementary materials increase learning, and our experience has convinced us that their use certainly makes it easier to write lessons. Nevertheless, we felt that in a country with few resources to devote to education the cost of such materials is prohibitive. In abandoning worksheets we had no intention of abandoning all supplementary visual materials--only those distributed to individual children. Our plan was to use blackboard illustrations that would be copied by the teacher from the guide and, occasionally, specially prepared posters.

Before making the decision to substitute other types of displays we reviewed the first-grade curriculum to determine the relative proportions of different activities that made use of the worksheet. The worksheets serve two basic purposes: they are a source of visual illustrations and they provide a place for students to record their responses. In some cases these two uses are independent; in others they are closely related. We will illustrate these functions with some specific examples.

a. The worksheet as a source of visual illustrations. A lesson segment that introduces the concept of more and less uses the worksheet to provide a series of illustrations of pairs of baskets containing different numbers of fruits. In a typical exercise the child is asked to circle the basket that contains the most coconuts. Note that although the child does record his answer on the worksheet, this use is secondary and non-essential. The primary use of the worksheet is to provide the picture; the child could just as well as have responded by pointing to his choice, or by orally answering the question "Which basket has more, the first or the second?"

b. The worksheet as a place to record responses. In teaching the numerals we give many exercises in which the children write numerals from dictation. The worksheet in this case has no illustrative material.

c. The worksheet as a source of illustration that is necessary for the child's written response. The most frequent example of this is in printed exercises where the position of the child's written response is dependent upon the position of the graphic stimulus.

Most exercises like those in the first example could be illustrated on the blackboard by the teacher, following directions in

the guide. The drawings would have to be simpler than those printed on the worksheets, but we have observed that with suitable models the teachers can produce such drawings. And, of course, the second grade lessons would use fewer pictorial illustrations than first grade. The topics about which we had some doubts were fractions, and area and other measurements, largely because we felt that many teachers themselves do not understand these concepts well enough to illustrate them. (Our doubts are not abstract but are based on observations of the illustrations teachers use in traditional classes, and the illustrations they draw following models provided by us in teachers' guides.) For these topics we felt that we should supply posters.

Exercises of the type shown in the second example, in which the student uses the worksheet to record only answers, can be worked just as well in a notebook, which all the children have. Thus, no loss is incurred in eliminating the worksheet for this type of exercise.

A closer inspection of the exercises of the type shown in the third example revealed that the majority are arithmetic exercises, such as

$$\begin{array}{r} 2 \\ \underline{+\ 5} \end{array} \qquad \begin{array}{r} 59 \\ \underline{-\ 28} \end{array} \qquad \begin{array}{r} 32 \\ \underline{\times\ 2} \end{array}$$

In these exercises it is essential that the stimulus and response be on the same piece of paper. However we saw no reason that second graders could not copy such exercises from the blackboard into their notebooks if the teacher copied the exercises from the guide in advance. Besides arithmetic exercises of the types shown above, this group also contains exercises on sequences, predecessors, and successors. All of these pose no great difficulty since they can also be written on the blackboard.

The allocation of worksheet space to the three types of uses described here was assessed by measuring the appropriate areas on every tenth worksheet from the first-grade lessons. The results are shown in Table 37, grouped into early, middle, and late lessons. Early in the year almost half of the worksheet was used for illustrative purposes only; this usage dropped to zero by the end of the year. The striking rise in the area of the worksheet devoted to illustrative material requiring a student response reflects in part the increased attention to computation algorithms. This survey of the use of worksheet space supported our contention that second-grade lessons could be written without using student worksheets.

Weighing all of the advantages and disadvantages we concluded that using the blackboard and notebooks instead of worksheets was clearly feasible except for those few areas (fractions, etc.) where we had serious doubts. We planned, then, to go ahead without worksheets, using posters only as necessary, and allowing ourselves the option of retreating to the use of worksheets at any time during the year if the results indicated that this was advisable.

Table 37

Allocation of Worksheet Space to Exercise Types[a]

Range of lessons sampled	Type 1 square inches	Type 1 %	Type 2 square inches	Type 2 %	Type 3 square inches	Type 3 %
10 - 50	56.0	43	13.5	10	61.0	48
60 - 100	11.4	8	31.8	22	101.7	70
110 - 150	0	0	5.1	4	139.9	96

[a]Exercise types are described in text.

As it turned out we used the blackboard and notebooks throughout the year, supplemented by a set of 22 9x12 posters that illustrated area and fractions. At the present time we feel that even fewer posters would have served, had we planned the instruction to make maximum use of the most essential. There is undoubtedly some diminution in the achievement results in certain topics but we feel that there would be no measurable loss in the most important concepts, in which we would include counting, numerals, order relations, addition, subtraction, multiplication, division, and oral word problems.

The use of worksheets in first grade is the most noticeable difference between first and second grade but also a number of stylistic and pedagogical changes were made. These were not all made abruptly between years but were incorporated one at a time as we obtained test and observational data that sharpened our understanding of how to prepare more effective and more entertaining lessons. There has been a consistent trend from the beginning of first grade, that even now continues, to reduce the amount of talk. We use fewer words per minute, fewer words per sentence, less time per uninterrupted message, and, as a result, obtain a higher response rate from the children. We also tend to address more speech directly to the children and reduce the amount of dialogue between characters. Transitions between lesson segments are now more often musical than verbal, and entertainment segments are also less verbal, relying instead on music or physical activity, both of which seem to be more appealing to the children than the more verbal diversions such as puns, poems, and stories.

We are also constantly concerned with rhythm and timing, in particular in relation to the rate of change of topics, the speed of speech, and the amount of time allowed in pauses for responses. Each of these must be continuously adapted to the level of development of the

children, with the general trend being to step up the pace as the children gain experience. Pauses for writing numerals, solving exercises, and so on, are particularly critical since pauses that are too long result in inattention whereas pauses that are too short lead to frustration and lack of learning. We do not yet have a comprehensive formula for determining pauses but have developed fairly precise standards for dozens of different types of responses at different levels of student development. In relation to pauses, one noticeable change between first and second grade is that in second grade we use silent pauses with no music or sound effects that might distract the children while they are thinking. We have learned that broadcasting "dead air" is frowned on by professional broadcasters. We are currently experimenting with the use of very quiet background music during these pauses to see of we can circumvent this objection without degrading the pedagogical quality.

B. Comparison of Grade 2 and Grade 3

As mentioned before, when we abandoned worksheets in second grade we moved ahead with some trepidation, holding in reserve the possibility that we could back down at any time from what seemed to us a drastic innovation. It rapidly became apparent that there would be no difficulty whatsoever in teaching the most important topics using only the blackboard and children's notebooks with, of course, cost-free supplementary manipulative materials such as seeds and twigs. Observations and weekly test results throughout the year confirmed our initial impression that we were successfully teaching counting, integer numerals, concepts of the basic arithmetic operations, arithmetic algorithms, and applications of arithmetic to everyday life. We had less reliable data, and therefore a more reserved opinion, on our success in teaching fractions and a few other topics that can best be taught with more elaborate graphic materials.

As the year went on we observed occasional disadvantages of the way in which we were using the blackboard. We required that before each lesson the teacher copy exercises onto the blackboard and that students copy designated portions of these into their notebooks. These tasks occupied about five to seven minutes each day. We observed a fairly high incidence of cases in which the teacher did not allow sufficient time for the children to finish copying before the broadcast, and valuable instructional time was lost while the children completed the copying task. In some cases this was caused by poor timing (on a number of occasions the teacher did not start until the broadcast had begun), but in other cases the teachers were unavoidably delayed because of conflicting demands caused by other children in other grades in the same classroom.

Another result of the way in which we were using the blackboard (which was true also for worksheets) was that children frequently worked ahead of the radio instruction. Although this is not always undesirable, particularly with the more able children, there were many cases where

it did not suit our (pedagogic) purposes. We experimented with other methods and found that dictating exercises was the most successful.

For several reasons, some of them just mentioned, we decided to adopt the procedure of dictating exercises for all third-grade lessons. Thus, we no longer ask the teacher to write anything on the blackboard prior to the lesson (except words for songs--an optional procedure). Some of the advantages of this plan are that

a. teachers with more than one grade in the classroom (a frequent occurrence above the first-grade level in rural schools) are free to work with the children not listening to the radio;

b. the success of the lessons is not dependent on the teacher having a guide or on following copying instructions correctly;

c. lesson time is not interrupted by copying activities; and

d. the children practice the skills of writing numerals, formatting exercises, and drawing simple displays that illustrate concepts.

Among the disadvantages are that some radio time (we estimate about 5 minutes in a half-hour lesson) is spent writing exercises, which takes more time when they are dictated than when they are copied from the board and that some teachers may feel less involved with the lessons than when they participate more fully.

It has proved quite difficult to write instructional sequences that teach children new skills, particularly when the exercise formats are unfamiliar. Nevertheless, we have successfully taught the children such skills as writing decimals and formatting vertical addition and subtraction exercises with decimals correctly. We have also taught a long division format that, although quite different from that used in the United States, is equally complex. Each time during the year that we have reviewed the decision to teach without using the blackboard, the staff has decided that the advantages outweigh the disadvantages.

One more comment about this method seems appropriate. Although it has not been a major consideration in our work, we are interested in the possibility of adapting the techniques we have been developing for use in settings where groups of students gather to learn outside of a formal school setting. Such settings are likely to lack both the physical facilities of the school and the trained teacher to guide instruction. The lessons for third grade as they are now designed could be used in such a setting and the instructional techniques could be transferred to other instructional programs developed for a more mature audience.

Some other changes have been made in lesson style and format as we moved from second grade to third grade:

a. There are fewer, longer segments.

b. We use very soft, tuneless music during pauses for writing or thinking.

c. We do not change voices within an exercise. (The dialogue from a second-grade lesson presented earlier in this report used two voices for a single exercise.) We feel that using a single voice helps the children attend to the separate parts of a single exercise.

d. Songs are taught more systematically. First the song is played. Then the words are spoken line by line for the children to repeat. Then the song is sung. Only one stanza is taught at a time and this process is repeated in at least two lessons.

e. The speed of speech is faster than in second grade.

f. The lessons are designed primarily for children who have had some prior experience with radio lessons.

The success of these changes is still being evaluated and we will report more fully on them when we review the work of 1977.

IV. JAPAN PRIZE

In April 1976 the project initiated inquiries about submitting an entry for the 11th Japan Prize International Educational Program Contest which was to be held in Tokyo in February 1977. We selected a typical lesson, "Lesson 171," which was submitted through the Nicaraguan Ministry of Public Education. On March 1 we were notified that the project lesson had won the Japan Prize for radio. The prize and trophy were presented to the Nicaraguan ambassador to Japan at ceremonies in Tokyo. The trophy was brought to Nicaragua by Dr. Eduardo Roman, who presented it to the Minister of Public Education.

The contest reported submission of 166 programs by 92 broadcasting organizations from all parts of the world. The list of winners for the radio category is given below.

Table 38

Prize-winning Radio Programs
The 11th Japan Prize Educational Program Contest

Prize	Title of Program	Organization
The Japan Prize	"Lesson 171"	Proyecto Matematica por Radio, Nicaragua
The Minister of Education Prize	"Deep Blue Sea"	British Broadcasting Corporation, U.K.
The Governor of Tokyo Metropolis Prize	"A Question of Choice"	Open University, U.K.
Special Prizes	" 'Movement & Music' Let Us Work for our Living"	Sri Lanka Broadcasting Corporation, Sri Lanka
	"The Big Man"	Educational Media Service VOK, Kenya
	"Anti-illiteracy"	Egyptian State Broadcasting Arab Republic of Egypt
The HBF Prize	"Kindergarten"	Australian Broadcasting Commission, Australia

In honor of the prize the Minister invited to her office members of the Project staff, Ministry officials, and directors of normal schools to give recognition to the work of the Project. At this meeting the Minister decided that the prize money ($2000) would be used to purchase radios and materials to use in the implementation of the project lessons in the department of Rio San Juan.

At the request of the Minister an exhibition was organized to display the trophy. The trophy was accompanied by a display of photographs illustrating the work of the project and the exhibition was used by Mrs. Vitalia Vrooman, who gave lectures at the normal schools of Jinotepe, San Marcos, Esteli, and Managua, and in a private home in Masaya.

News of the Japan Prize was carried by several printed and oral news media. Television Channel II reported about the project on a program sponsored by the Secretary of Information and Press of the Presidency of the Republic. The two daily papers, La Prensa and Novedades, published the news and by radio there were interviews on the Sunday program of "La Hora Nacional," and the program "Piez en Punto," together with newscasts on Radio Mundial and Radio Masaya.

The project has received many inquiries as a result of the award--among others from Argentina, Italy, and Spain--and is in the process of preparing a packet containing a tape of the prize-winning lesson and supporting materials. In addition to the interest expressed by foreign organizations, information has been requested by several educational broadcasting stations in the United States. Many expressions of interest have been stimulated by reports carried by the Instruction Newsletter of the National Association of Educational Broadcasters and the Development Communication Report of the Clearinghouse on Development Communication.

V. OTHER ACTIVITIES

A. Collection and Analysis of School and Demographic Data

Each year data are collected on the schools, teachers, classes, and students involved in the Radio Mathematics Project. All of the students who are administered pretests and posttests are included in this data base: those using the radio lessons and those selected as controls. The data for 1975 were used by Dr. Dean Jamison, an educational economist with the World Bank, for an examination of the effect of radio instruction on student repetition (Jamison, 1977). A more extensive analysis being conducted by the project staff will be the subject of a report in September, 1977.

B. Analysis of Addition and Subtraction Skills

In August and September 1976 the project administered a test of addition and subtraction skills to 3000 students, 500 at each of six grade levels, from a randomly-selected set of primary schools in Managua. The test was designed by Mrs. Jamesine Friend to survey systematically all of the component skills required to perform column addition and subtraction. The test had 150 addition exercises and 150 subtraction exercises; with a matrix-sampling design each student took one-tenth of the test. The data base consists of all the responses for each student.

The major purpose for administering the test was to gain student performance information to guide curriculum development. Summary statistics for the test were quickly obtained in Nicaragua. Further analyses are presently underway. The test and some of the analytic work will be described in a chapter of the forthcoming book on the work of the project. A major focus of present work is the development of register machine models for both the addition and subtraction algorithms, building on earlier work of Suppes (1973). The data base has also been used by workers in the laboratory of Dr. John Seeley Brown of Bolt, Beranek, and Newman, who have constructed a computer program that diagnoses student computation errors.

C. Computer generation of arithmetic exercises

As an aid to the development of the curriculum for third grade, sets of addition, subtraction, multiplication, and division exercises were generated by computer. For each operation, a set of variables was developed that could be used to define all of the exercise classes contained in the master plan. As an example of the process we briefly discuss the generation of division exercises.

The following variables are used to define division exercise classes:

DQ = number of digits in the quotient (1,2,3).
RF = 0 if there is a remainder, 1 otherwise.
RP = 0 if all partial remainders are greater than zero, 1 otherwise. (If DQ = 1 the exercise has no partial remainders and RP=0)
QZ = 0 if there are no zeros in quotient, 1 otherwise. (If DQ=1 and QZ=1 then quotient = 0. If DQ>1 then zeros must occur to the right of the leftmost digit, because size of quotient is specified by DQ.)
ZQ = 0 if the number of digits in the quotient is less than the number of digits in the dividend, 1 otherwise. (Alternately--the quotient has a leading zero.)
SZ = 0 if all products have both factors <= 5, 1 otherwise.

These variables can be related to the major component skills for carrying out long division. Using these variables, 56 classes of division exercises were defined. By specifying the distribution of digits selected by the computer program in generating exercises for each class, the curriculum developer can control the amount of practice students receive on the different exercises that comprise each exercise class. Although this type of careful selection of exercises can be done by hand, use of the computer greatly facilitates the work, and proves to be a great aid to the curriculum developer at the time lesson outlines are written.

D. Analysis of Weekly Test Data

Weekly tests on topics throughout the curriculum were administered to both first- and second-grade classes during 1976. These tests, which are described in the Third Annual Report, were designed by the Project staff to provide feedback to the curriculum developers. The test results also form a rich data base for empirical studies in mathematical learning theory. This data base is currently being used by William Wagner, a Stanford doctoral student, to study a performance model based on the structural features of addition and subtraction exercises. Because similar exercises are tested over time, it is possible to augment the model to account for learning. One method of testing the model is to predict student performance on the exercises of a given week from the results of previous weeks. These predictions of proportion correct for each exercise are on the average within 10% of the observed values. Other work by Wagner with the weekly tests involves construction of learning curves for individual classes. This research will be reported in the forthcoming book on the work of the project.

E. Cost Analysis of the Project

Under the auspices of EDUTEL, a private consulting firm with a contract from AID to study economic aspects of educational technology, Dr. Stuart Wells of San Jose State University visited the project offices in Masaya during January, 1977, to gather data for an analysis of project costs. The results of that study are reported in Wells and Klees (1977). Wells and Klees projected costs for widescale implementation in Nicaragua for periods between the present and 1998. A summary of the cost implications of the alternatives they examine is presented here.

Rate of Implementation. Lowest costs are obtained through the most rapid implementation. If there are no serious budget, pedagogical, or social constraints, the program for any grade level should be fully implemented in the year following program production. Substantial savings will likely be realized through the use of alkaline batteries in those areas not served by mainline electricity.

Implementation to Upper Grade Levels. Average costs for an 18-year planning horizon are $2.00, $1.52, $1.73, $2.07, $2.42, and $2.92 for the first through sixth grades respectively. Higher costs at the upper grade levels are due to substantially lower enrollment levels. Implementation will of course depend on the perceived value of the reform at each grade level relative to the costs.

Alternative Program Production. The cost of implementation in the fifth and sixth grade can be reduced substantially through a reduction of effort by expatriates. If, for example, summative evaluation is eliminated and expatriates are replaced with Nicaraguans for program production, the average costs for the 18-year planning horizon will drop from $2.42 to $1.53 for the fifth grade and from $2.92 to $1.82 for the sixth grade.

VI. PROJECT ADMINISTRATION

On June 30 the project staff included two North Americans and 28 full-time Nicaraguans. In addition, seven people worked part-time as actors and technicians involved with the recording of lessons. The office has six major departments--curriculum, radio production, research and evaluation, teacher training, materials production, and support, supervised by the project managers. The table below shows an estimate of the number of full-time-equivalent positions given to each function. Actually, almost everyone on the staff performs more than one function and often these fall in more than one department. Furthermore, for training purposes, many staff members change jobs to learn about many different aspects of the production process.

Table 39

Allocation of Project Personnel to Departments

Department	Full-time-equivalents	
Management	2	
Curriculum	4	1/2
Script writing and recording	3	3/4
Research and evaluation	7	3/4
Teacher training and guides	1	
Materials production		1/2
Support	10	1/2
Total	30	

The main production process has the following steps: curriculum design, preparation of lesson outlines, instruction writing, entertainment writing, preparation of the finished script, writing of the teachers' guide, art work, final checking of script, direction and production of the recorded lesson. These tasks are handled by the curriculum and script writing departments with the help of the teacher-training assistant who writes the guides.

At the next stage, the lessons are played in the classroom and data collection begins. Classrooms are observed, observation summaries are prepared, children are tested, and so on. These activities are the responsibility of the research and evaluation department. The support staff includes three secretaries, an artist, three drivers (one of whom runs the mimeograph machine), two maids, a gardener, and a night guard. In addition, an accountant handles business matters for the project.

This team of thirty people produces one new lesson each school day. In addition, a lower level of activity supports the presentation of lessons from another grade level. In 1977, the new lessons are at the third-grade level, the other lessons at the second-grade level. The data collection activities center around the experimental grade level but at different times of the year involve other grade levels as well. The flow of activities related to the school year is illustrated by the calendar that appears at the beginning of this report.

The Stanford staff members have striven from the beginning of our work in Nicaragua to train Nicaraguan staff members to exercise positions of leadership in the project. At this time, almost all departments are headed by Nicaraguans and the Stanford staff members move increasingly to positions of technical advisors on matters of curriculum development and research design.

VII. WORK PLAN FOR 1977-1978

The project has received an extension of its funding from AID for two years: from July 1, 1977 to June 30, 1979. We plan to maintain the Stanford staff in Nicaragua until December 31, 1978. The remainder of the contract period will be spent at Stanford analyzing data and completing the documentation of our work in Nicaragua.

During the period from July 1977 to December 1977 the third-grade curriculum will be completed. The remainder of the 165 lessons that will comprise the curriculum will be planned, written, recorded, and broadcast to the experimental schools. The daily classroom observations and weekly tests will be continued until the end of the year. Posttests will be administered in Grades Two through Five, which will complete the control testing for those grades and will also complete the experimental group testing for the formal evaluation of second grade. Finally, the master plans will be written for the Grade 4 curriculum to be produced in 1978 and a revised master plan will be prepared for first grade.

During 1978 we will attempt to produce new curriculum for fourth grade and to produce a revised curriculum that does not use worksheets for first grade. We are not sure that our resources will be adequate for this dual task; much depends on the cooperation of the Nicaraguan government in supporting seven new staff positions. We feel strongly that it is important that first grade lessons be revised because in their present state they are too expensive to be used on a wide scale. Because entering first-grade students have so few school-related skills, constructing an instructional program without printed materials will be difficult. However, we have learned much in the past three years about writing instructional dialogue; we expect to be able to adapt techniques developed for second and third grade to lessons for first grade. We should also be able to exploit more fully the use of materials that was explored in the present first grade lessons.

Because of the heavy production load planned for 1978, we do not expect to have resources for additional experimental work. However, we will be giving full cooperation to the Nicaraguan Ministry of Public Education in formulating plans for expanding the use of the program in other regions in Nicaragua. The Ministry plans at least and expansion to the Department of Rio San Juan in 1978, and perhaps to other areas as well.

At Stanford we plan to publish the second in the series of books about the project. Plans for the book are well underway, several chapters are written, and the book should go to press by the end of the year. Because we are equipped to produce camera-ready

copy we are able to shorten drastically the delay between preparation and publication. Thus, we expect the second volume to be available for distribution early next year.

The project has a heavy commitment to documentation in the remaining period of its funding. Among the reports we plan to produce are:

An analysis of the 1974-75 socioeconomic and school data and their relationship with student achievement under radio-based instruction.

A summary of the third operational school year describing the experimental characteristics and results.

An analysis of the 1976-77 socioeconomic and school data and their relationship to student achievement under radio-based instruction.

A summary volume (in book form) of research conducted during the 1977 and 1978 experimental years.

A series of curriculum reports which includes all instructional lessons developed under the project with explanatory materials where appropriate.

We also plan to prepare an information package about the project, containing a tape of the lesson that won the Japan Prize and other materials describing our work.

VIII. DISSEMINATION AND UTILIZATION OF RESEARCH RESULTS

In September 1976 the project sponsored an international conference, The Use of Radio as an Instructional Tool in Primary Schools, which was held in Managua, Nicaragua. Twenty-nine participants from 13 countries attended the conference, which was designed for educators and administrators who were involved with the use of instructional radio. Conference activities included discussion of the project, observation of radio lessons in schools, and workshops geared to the experience of the participants. Following the conference, a report summarizing the conference activities and including an evaluation of the conference by participants was produced.

A slide-tape show of the project was completed in early spring of 1977. The show was produced by project staff members in Nicaragua, under the direction of Thomas Tilson, and edited by the Academy for Educational Development in Washington, D.C. The sound-track was prepared in French, Spanish, and English. The French version has been presented in the Central African Empire and Cameroon, the Spanish version has been presented at several meetings in Nicaragua, and the English version has been presented in Washington D.C. and at Stanford University.

In August 1976, Vitalia Vrooman and Juan Jose Montenegro conducted an informational seminar on the project for about 50 School Inspectors and Sub-inspectors representing all 16 departments in Nicaragua. A preliminary version of the slide-tape show was shown at this seminar.

Jamesine Friend made a trip to Brazil in October and November, 1976. While there, she visited the FEPLAM project in Porto Alegre, which deals mainly with adult education using radio, printed supporting materials, and slides. She also visited SARE, a branch of FEPLAM, which is making a comparison between the FEPLAM experimental and traditional mathematics course. Following the visit to SARE, Mrs. Friend visited Fundacao Padre Anchieta in Sao Paulo, which is the largest state-supported educational radio and television organization in Brazil. Next, she visited PRONTEL in Rio de Janeiro, and gave an one-week seminar on the project to mathematics educators. During the seminar, she showed a preliminary version of the slide-tape show. Before returning to Nicaragua, Mrs. Friend visited Project SACI in Natal, which is concerned with broadcasting educational radio and television programs, including instructional materials for both students and teachers.

Dr. Searle was part of a team that traveled to the Central African Empire and Cameroon in March and April, 1977. The purpose of the team was to design a project to provide assistance to the educational system. In the Central African Empire, the feasible areas for assistance included curriculum development, teacher training, and nonformal adult education; using radio as a dissemination medium. A

TV system is about to be installed in Cameroon, which would make a seminar on educational technology an appropriate area of assistance. In the course of her trip, Dr. Searle gave presentations about the project in both the Central African Empire and in Cameroon.

In March 1977, Dr. Searle visited the Center for Educational Technology in Israel and during her stay presented a seminar on the project.

The project staff has written a book about the work of the first experimental year: The Radio Mathematics Project: Nicaragua 1974-1975. The book, which was published in November 1976 by the Institute, has been distributed to libraries, related projects, and interested individuals in this country and abroad. To date, 124 complimentary copies have been sent by the Institute to people in the following countries:

Bolivia	1	Israel	2
Brazil	3	Jamaica	2
Canada	1	Kenya	2
Colombia	1	Mexico	4
England	1	Nicaragua	5
Ethiopia	1	Pakistan	1
France	1	Paraguay	2
Ghana	1	Peru	1
Germany	1	Philippines	3
Guatemala	2	Scotland	1
Haiti	1	Thailand	2
India	1	The Netherlands	1
Indonesia	2	United States	72
Iran	8	Western Samoa	1

Other copies of the book are being distributed by the Academy for Educational Development in Washington, D.C.

A full list of the papers and publications developed during the year follows.

Articles

Jamison, D. Radio education and student repetition in Nicaragua. In B. Searle, J. Friend, & P. Suppes, The Radio Mathematics Project, Nicaragua 1976. Stanford, Calif.: Stanford University, Institute for Mathematical Studies in the Social Sciences, in preparation.

Searle, B., & Suppes, P. The Nicaragua Radio Mathematics Project. In Proceedings, International Conference on Evaluation and Research in Educational Broadcasting, January 1977. [Also, in T. Bates & J. Robinson (Eds.), Evaluating educational television and radio. Milton Keynes, England: The Open University Press, 1977.]

Searle, B., & Suppes, P. Achievement levels of students learning primary-school mathematics by radio in Nicaragua. Studies in Science and Mathematics Education, in press.

Wells, S., & Klees, S. Education decisions and cost analysis: The Radio Mathematics Project in Nicaragua. In B. Searle, J. Friend, & P. Suppes, The Radio Mathematics Project, Nicaragua 1976. Stanford, Calif.: Stanford University, Institute for Mathematical Studies in the Social Sciences, in preparation.

Reports

Searle, B., Friend, J., Suppes, P., & Tilson, T. Application of radio to teaching elementary mathematics in a developing country (3rd annual report). Stanford, Calif.: Stanford University, Institute for Mathematical Studies in the Social Sciences, 1976. (ERIC Document Reproduction Service No. ED 125 609)

Unpublished Manuscripts

Friend, J. The Radio Mathematics Project. Unpublished manuscript, Stanford University, Institute for Mathematical Studies in the Social Sciences, 1976.

Friend, J., Searle, B., Suppes, P., & Zanotti, M. Research plan: Radio Mathematics Project. Unpublished manuscript, Stanford University, Institute for Mathematical Studies in the Social Sciences, 1976.

Institute for Mathematical Studies in the Social Sciences. Final report: Conference on the use of radio as an instructional tool in primary schools. Unpublished manuscript, Stanford University, 1976.

Searle, B., Matthews, P., Suppes, P., & Friend, J. Formal evaluation of the radio mathematics instructional program: Nicaragua--Grade 1, 1976. Unpublished manuscript, Stanford University, Institute for Mathematical Studies in the Social Sciences, 1977.

Paper Presented at Conference

Searle, B., & Suppes, P. Computer usage in the Nicaragua Radio Mathematics Project. Paper presented at the International Conference on Computer Applications in Developing Countries, Bangkok, Thailand, August 1977.

Papers Presented at Conference in Nicaragua

(The following papers are available in Spanish and English)

Friend, J. The flexible master plan. Paper presented at the international conference: The Use of Radio as an Instructional Tool in Primary Schools, Managua, Nicaragua, September 1976.

Friend, J. Planning for change. Paper presented at the international conference: The Use of Radio as an Instructional Tool in Primary Schools, Managua, Nicaragua, September 1976.

Friend, J. Closing the feedback loop. Paper presented at the international conference: The Use of Radio as an Instructional Tool in Primary Schools, Managua, Nicaragua, September 1976.

Guadamuz, N. Forms of entertainment for radio mathematics. Paper presented at the international conference: The Use of Radio as an Instructional Tool in Primary Schools, Managua, Nicaragua, September 1976.

Ledee, J. Creating and producing the radio lessons. Paper presented at the international conference: The Use of Radio as an Instructional Tool in Primary Schools, Managua, Nicaragua, September 1976.

McNally, K. The costs of radio instruction in Nicaragua. Paper presented at the international conference: The Use of Radio as an Instructional Tool in Primary Schools, Managua, Nicaragua, September 1976.

Montenegro, J. Distribution of materials and teacher training. Paper presented at the international conference: The Use of Radio as an Instructional Tool in Primary Schools, Managua, Nicaragua, September 1976.

Quintanilla, A. The weekly tests for first and second grade. Paper presented at the international conference: The Use of Radio as an Instructional Tool in Primary Schools, Managua, Nicaragua, September 1976.

Ramirez, L., & Friend, J. An investigation of addition and subtraction. Paper presented at the international conference: The Use of Radio as an Instructional Tool in Primary Schools, Managua, Nicaragua, September 1976.

Searle, B. Why teach mathematics by radio? An introduction to the Nicaragua Radio Mathematics Project. Paper presented at the international conference: The Use of Radio as an Instructional Tool in Primary Schools, Managua, Nicaragua, September 1976.

Searle, B., & Friend, J. Using tests to measure student achievement. Paper presented at the international conference: The Use of Radio as an Instructional Tool in Primary Schools, Managua, Nicaragua, September 1976.

Tilson, T. Teacher's perceptions of the Radio Mathematics Project. Paper presented at the international conference: The Use of Radio as an Instructional Tool in Primary Schools, Managua, Nicaragua, September 1976.

Vrooman, V. The lessons of the Radio Mathematics Project. Paper presented at the international conference: The Use of Radio as an Instructional Tool in Primary Schools, Managua, Nicaragua, September 1976.

Vrooman, V. Writing the instructions. Paper presented at the international conference: The Use of Radio as an Instructional Tool in Primary Schools, Managua, Nicaragua, September 1976.

IX. INVOLVEMENT OF MINORITY PERSONNEL AND WOMEN

There are four full-time professionals on the Stanford staff of the Radio Mathematics Project, two of whom work in Nicaragua. Two of these are women. The remaining staff members at Stanford are a secretary (female) and a graduate student (male). IMSSS has through its existence maintained a congenial atmosphere for both men and women of all types of backgrounds. That the Project Director in Nicaragua and the Project Coordinator at IMSSS are both women is not an unusual circumstance. Although the project has no plans for increase the size of the full-time staff, any replacements will be made within the policy guidelines for Stanford University that call for active recruiting of women and minority personnel.

X. REFERENCES

Jamison, D. Radio education and student repetition in Nicaragua. In B. Searle, J. Friend, & P. Suppes, The Radio Mathematics Project, Nicaragua, 1976. Stanford, Calif.: Stanford University, Institute for Mathematical Studies in the Social Sciences, in prepartion.

Searle, B., Friend, J., & Suppes, P. The Radio Mathematics Project: Nicaragua, 1974-1975. Stanford, Calif.: Stanford University, Institute for Mathematical Studies in the Social Sciences, 1976.

Searle, B., Matthews, P., Suppes, P., & Friend, J. Formal evaluation of the radio mathematics instructional program: Nicaragua--Grade 1, 1976. Unpublished manuscript, Stanford University, Institute for Mathematical Studies in the Social Sciences, 1977.

Sirotnik, K. Introduction to matrix sampling for the practitioner. In W. J. Popham (Ed.), Evaluation in Education. Berkeley, Calif.: McCutchan Publishing Co., 1974.

Suppes, P. Facts and fantasies of education, Phi Delta Kappa Monograph, 1973.

Wells, S., & Klees, S. Education decisions and cost analysis: The Radio Mathematics Project in Nicaragua. In B. Searle, J. Friend, & P. Suppes, The Radio Mathematics Project, Nicaragua 1976. Stanford, Calif.: Stanford University, Institute for Mathematical Studies in the Social Sciences, in preparation.

APPENDIX A: OUTLINE OF TESTING PROCEDURES FOR 1976 GRADE 1 EVALUATION

Pretest	Posttest
GENERAL	
1. Two staff members administered test.	1. One staff member administered test.
2. Test instructions read by staff member.	2. Test recorded. Only preliminary instructions read.
3. Test length about 25 minutes. Total administration time about 50 minutes.	3. Same
4. Children responded in printed test booklet.	4. Children responded on project-prepared answer sheets.
5. Commercial test modified by project.	5. Project-produced test.
TEST PROCEDURE	
1. Explain to classroom teacher purpose and procedure for test.	1. Same
2. Arrange desks and chairs so that children would be well spaced and have good surface to write on.	2. Same
3. Select children: remove all children 6 years or younger; ask teacher if there are any handicapped children. Remove those she reports as seriously mentally retarded and those that have any other handicap that would inhibit taking test; remove remaining children at random until number reduced to number of seats available.	3. Select children: remove handicapped or retarded children; read names of children who took pretest, ask them to remain; if there are still seats available fill them with remaining children (as many as there seats for, selecting at random.
4. Pass out pencils and answer booklets.	4. Pass out pencils and answer sheets. (I-forms of test have been previously intermixed.)

5. Administrator gives general test instructions. a. Using tape puts up drawings from two first pages of TOBE booklet on blackboard, gives oral instructions and has children come to board to mark answer on drawings.	5. Administrator gives general test instructions. a. Administrator gives several oral examples requiring different types of answers, has children come to board to write answers.
6. Test begins One of the two test administrators reads instructions.	6. Test begins Test administrator turns on tape recorder.
7. Activities during test a. Other test administrator asks teacher to fill out data slip for each child and to provide information on test envelope. Teacher remains in room while doing this. b. Both administrators monitor to insure that children are responding on correct page and not copying.	7. Activities during test a. Test administrator does same. b. Administrator monitors to insure that children are responding in correct place an not copying. c. Administrator conducts exercise during break in test.
8. After test, administrator attaches name slip to each test paper, checks that all booklets are turned, that test envelope is filled out, and collects pencils.	8. After test administrator turns off tape recorder, rewinds tape. Other activities are the same as for the pretest.

APPENDIX B: DATA TABLES

Table A

Performance of Experimental and Traditional Students on 1976 First-Grade Achievement Test

Item[a]	Percentage correct: Experimental	Percentage correct: Control	Description of exercise
1-A	95.6	72.5	Which has more (8, 12, 10)
1-B	84.1	67.9	Write the number 42
1-C	79.6	31.7	How much is 5 minus 1?
1-D	89.0	79.8	Circle the widest bench (2 choices)
2-A	83.0	54.1	What number comes after 13
2-B	86.5	27.6	Circle the fraction one-half (1/4, 2/3, 1/2, 1/3)
2-C	75.2	41.6	Which has fewer (10, 12, 8)
2-D	97.6	34.0	How much is 5 plus 5?
3-A	98.4	78.9	Circle the 50 cent coin
3-B	81.2	73.1	Circle the third boy (in a line)
3-C	92.0	64.4	Circle eighty-two (28, 82, 72, 27)
3-D	86.6	39.4	Circle the figure divided in halves
4-A	88.5	69.7	How much is 8 minus 2?
4-B	74.7	29.9	How much is 2 plus 5?
4-C	90.5	62.4	Count the men without hats (3 with, 5 without)
4-D	78.1	37.2	How much is 7 plus 4?
5-A	68.7	32.1	Circle the figure divided into fourths
5-B	97.1	85.8	Circle the 5 cordoba bill (3 choices)
5-C	78.1	38.6	How much is 3 plus 6?
5-D	52.4	30.9	Circle the smallest number (41, 38, 36)
6-A	91.8	66.1	How much is 6 minus 4?
6-B	52.4	38.8	Write the number that comes before 14
6-C	95.6	70.3	Circle the 50 cordoba bill
6-D	79.3	41.5	How much is 30 plus 4?

(Table A, continued)

Item[a]	Percentage correct: Experimental	Percentage correct: Control	Description of exercise
7-A	69.8	48.6	Write the number that comes after 85
7-B	61.8	33.6	5 + 7 = ___
7-C	70.1	34.7	How much is 23 plus 1?
7-D	42.7	34.0	Write the number that comes after 59
8-A	72.5	53.2	Circle the smallest (43, 47, 51)
8-B	70.0	28.4	How much is 2 plus 1 plus 3?
8-C	72.3	30.7	Circle the figure divided into thirds
8-D	48.8	21.3	Write the number that comes before 40
9-A	68.1	43.1	How much is 8 plus 7?
9-B	70.0	28.4	How much is 9 minus 4?
9-C	72.3	26.7	Write the number that comes before 36
9-D	48.8	62.8	Circle the word 4 (3 choices)
10-A	68.1	14.7	What time does the clock say? (8)
*10-B	66.5	79.1	Circle the triangle (3 choices)
10-C	58.4	30.7	Write the word 8
10-D	85.4	56.4	Measuring - pencil and cm ruler (8 cm)
11-A	61.0	32.1	How much is 54 minus 1?
11-B	58.2	38.8	How much is 3 times 3?
11-C	59.1	23.8	How much is 45 minus 5?
11-D	87.8	69.2	How much is 10 minus 6?
12-I	53.7	47.3	Count the balls (32)
12-II	61.4	51.4	Count the balls (24)
12-III	73.6	59.4	Count the balls (15)
12-IV	91.3	72.5	Count the balls (7)
13-I	36.8	13.4	How much money is shown? (50 cents, 10 cents, 5 cents)
13-II	46.2	45.1	How much money is shown? (25 cents)
13-III	62.1	29.3	How much money is shown? ($5, $1, $1, $1)
13-IV	64.7	35.8	How much money is shown? ($5)

(Table A, continued)

Item[a]	Percentage Correct Experimental	Control	Description of exercise
14-I	13.2	18.8	Fill in the missing number (4, 6,__ , 10)
14-II	17.2	10.8	Fill in the missing number (5, 10,__ , 20)
14-III	59.3	46.2	Fill in the missing number (50, 60,__ , 80)
14-IV	72.0	46.8	Fill in the missing number (83, 84,__ , 86)
15-I	54.4	65.2	3 +2
15-II	68.3	36.0	3 + 9 = ___
15-III	52.1	58.5	3 +4
15-IV	66.7	33.9	8 + 0 = ___
16-I	54.4	26.8	8 -6
16-II	68.3	43.2	9 -0
16-III	52.1	36.8	7 - 3 = ___
16-IV	66.7	12.8	4 - 4 = ___
17-I	75.0	59.8	5 2 +2
17-II	42.8	28.8	64 + 1 = ___

(Table A, continued)

Item[a]	Percentage correct: Experimental	Percentage correct: Control	Description of exercise
17-III	72.1	54.7	6 +5
17-IV	72.0	32.1	1 + 4 + 3 = ___
18-I	61.8	16.1	25 + 3
*18-II	27.6	18.0	14 - 7 = ___
*18-III	7.1	16.0	13 - 9
18-IV	60.7	30.3	90 + 5 = ___
19-I	62.5	38.4	16 +32
19-II	40.0	20.7	96 -72
19-III	47.1	28.3	35 -13
19-IV	65.3	34.9	41 +36
*20-I	30.1	26.8	5 x2
*20-II	29.0	28.8	4 x 2 = ___
20-III	47.9	12.3	53 - 2
20-IV	55.3	10.1	68 - 5

(Table A, continued)

Item[a]	Percentage correct: Experimental	Percentage correct: Control	Description of exercise
21-I	50.0	30.4	56 -36
21-II	47.6	34.2	32 15 +50
21-III	62.1	23.6	35 +40
21-IV	53.3	15.6	67 -20

[a] Starred items were not taught by RMP curriculum. Items labeled A-D are G-items, those labeled I-IV are I-items.

Table B

Performance of Second-grade students on 1976 Posttest

Item[a]	Percentage correct: Experimental	Percentage correct: Traditional	Description of exercise
1-I	45.12	34.74	Write the numeral that comes after 349
1-II	77.92	62.89	Write the numeral that comes after 71
1-III	51.22	47.92	Write the numeral that comes after 682
1-IV	76.64	64.95	Write the numeral that comes after 39
1-V	76.54	59.79	Write the numeral that comes after 306
2-I	95.12	82.11	Count the beans and write the numeral on the line (25 beans)
2-II	93.51	89.69	Count the beans and write the numeral on the line (32 beans)
2-III	95.12	96.88	Count the beans and write the numeral on the line (8 beans)
2-IV	98.72	88.66	Count the beans and write the numeral on the line (17 beans)
2-V	83.95	75.26	Count the beans and write the numeral on the line (40 beans)
3-I	6.10	6.32	Circle the largest number (1/4 1/2 1/3)
3-II	76.62	63.92	Circle the largest number (923 479 150)
3-III	82.93	70.83	Circle the largest number (59 73 75)
3-IV	5.13	7.22	Circle the largest number (1/10 1/5 1/4)
3-V	55.56	31.96	Circle the largest number (34 401 149)
4-A	95.48	0	Circle 7,359 (3759 9537 7359 7539)
4-B	99.44	0	Circle 690 (69 690 960 96)
4-C	95.35	85.91	Circle 706 (706 760 607 76)
4-D	0	77.07	Circle 74 (40 74 47 70)
4-E	0	89.84	Circle 241 (142 421 251 241)

(Table B, continued)

Item[a]	Percentage correct: Experimental	Percentage correct: Traditional	Description of exercise
5-1	85.31	0	Write 237
5-2	86.67	0	Write 2,989
5-C	95.35	83.89	Write 608
5-D	0	72.68	Write 71
5-E	0	82.81	Write 830
6-A	67.80	0	Circle the 8th soldier
6-B	95.00	0	Circle the 2nd soldier
6-C	88.37	85.91	Circle the 4th soldier
6-D	0	40.00	Circle the 10th soldier
6-E	0	67.19	Circle the 6th soldier
7-I	90.24	61.05	842 + 41
7-II	89.61	69.07	41 + 30
7-III	86.59	64.58	3886 + 5102
7-IV	79.49	59.78	504 + 132
7-V	71.60	53.61	26 + 3
8-A	82.49	0	Circle the figure divided in half
8-B	97.78	0	Circle the figure divided in fourths
8-C	93.02	83.22	Circle the figure divided in fifths
8-D	0	66.83	Circle the figure divided in tenths
8-E	0	26.56	Circle the figure divided in thirds
9-I	89.02	77.89	9 + 6 = ____
9-II	84.42	65.98	50 + 20 = ____
9-III	39.02	33.33	400 + 65 = ____
9-IV	82.50	67.01	73 + 6 = ____
9-V	80.25	63.92	58 + 5 = ____
10-I	60.98	58.95	Write the value of this group of money: 50c + 50c
10-II	46.75	41.24	Write the value of this group of money: 5c + 50c

(Table B, continued)

Item[a]	Percentage correct: Experimental	Percentage correct: Traditional	Description of exercise
10-III	40.24	36.46	Write the value of this group of money: 25c + 10c + 5c
10-IV	47.44	53.61	Write the value of this group of money: 10c + 50c
10-V	41.98	45.36	Write the value of this group of money: 25c + 10c + 25c
11-I	80.49	60.00	723 − 621
11-II	70.13	52.58	376 − 50
11-III	59.76	36.46	76 − 5
11-IV	82.05	65.98	66 − 64
11-V	71.60	52.58	7533 − 2010
12-A	48.59	0	How much is 800 plus 25?
12-B	86.11	0	How much is 40 plus 5?
12-C	100.00	85.23	How much is 7 plus 5?
12-D	0	60.98	How much is 48 plus 4?
12-E	0	79.69	How much is 33 plus 2?
13-I	90.24	65.26	8 − 6 = ____
13-II	75.32	46.39	60 − 40 = ____
13-III	56.10	35.42	69 − 9 = ____
13-IV	62.82	53.61	17 − 8 = ____
13-V	83.95	53.61	13 − 5 = ____
14-A	49.15	0	How much is 70 minus 60?
14-B	77.22	0	How much is 16 minus 8?
14-C	90.70	69.80	How much is 11 minus 4?
14-D	0	66.34	How much is 8 minus 4?
14-E	0	50.78	How much is 85 minus 5?
15-I	78.05	34.74	570 + 93

(Table B, continued)

Item[a]	Percentage correct: Experimental	Percentage correct: Traditional	Description of exercise
15-II	84.42	53.61	64 + 28
15-III	78.05	50.00	667 + 204
15-IV	78.21	60.82	147 + 667
15-V	82.72	63.92	39 + 68
16-A	89.27	0	How much is 2 times 3?
16-B	70.56	0	How much is 6 divided by 2?
16-C	88.37	78.52	How much is 3 times 5?
16-D	0	64.88	How much is 4 times 2?
16-E	0	45.31	How much is 8 divided by 4?
17-I	57.32	16.84	546 - 127
17-II	61.04	18.56	82 - 59
17-III	37.80	16.67	856 - 497
17-IV	38.46	12.37	4734 - 1917
17-V	53.09	22.68	67 - 8
18-A	35.03	0	Write what time it is on this clock (4:00)
18-B	4.44	0	Write what time it is on this clock (2:30)
18-C	11.63	18.79	Write what time it is on this clock (8:15)
18-D	0	56.59	How many days are in a week?
18-E	0	82.03	Which is the longest? (month day year)

(Table B, continued)

Item[a]	Percentage correct: Experimental	Percentage correct: Traditional	Description of exercise
19-I	82.93	63.16	2413 x 2
19-II	93.51	78.35	4 x2
19-III	63.41	41.67	324 x 3
19-IV	71.79	52.58	36 x 2
19-V	95.06	67.01	32 x 3
20-A	15.82	0	How many grams are in a kilogram?
20-B	92.22	0	Circle the parallel lines
20-C	48.84	33.56	Circle the angle
20-D	0	26.83	Which is longest? (decimeter centimeter meter)
20-E	0	45.31	How many centimeters are in a meter?
21-I	47.56	41.05	3 | $\overline{12}$
21-II	77.92	54.64	2 | $\overline{6}$
21-III	73.17	46.88	4 | $\overline{8}$
21-IV	83.33	54.64	3 | $\overline{9}$
21-V	85.19	58.76	2 | $\overline{8}$
22-I	71.95	75.79	In the square there is money (C$2 and C$2). With this money Mr. Jose is going to buy a melon that costs 3 cordobas. Write how many cordobas will be returned to him.
22-II	88.31	83.51	In the square there is money (C$10). With this money Mr. Jose is going to buy a melon that costs 3 cordobas. Write how many cordobas will be returned to him.

(Table B, continued)

Item[a]	Percentage correct: Experimental	Percentage correct: Traditional	Description of exercise
22-III	78.05	73.96	In the square there is money (C$5). With this money Mr. Jose is going to buy a melon that costs 3 cordobas. Write how many cordobas will be returned to him.
22-IV	51.28	51.55	In the square there is money (C$50). With this money Mr. Jose is going to buy a melon that costs 3he wants cordobas. Write how many cordobas will be returned to him.
22-V	86.42	68.04	In the square there is money (C$20). With this money Mr. Jose is going to buy a melon that costs 3 cordobas. Write how many cordobas will be returned to him.
23-I	63.41	30.53	2/5 - 1/5 = ___
23-II	67.53	37.11	2/10 + 5/10 = ___
23-III	69.51	44.79	1/3 + 1/3 = ___
23-IV	78.21	44.33	2/5 + 1/5 = ___
23-V	64.20	26.80	5/10 - 2/10 = ___
24-A	63.28	0	Roger arrives at school at 8:00, and Luis arrives 2 hours later. What time does Luis arrive? (6:00 8:00 10:00 12:00)
24-B	54.44	0	Mr. Sanchez's oxen are able to plough 4 fields a day. How many fields are they able to plough in half a day? (4 1/2 2 8)
24-C	95.35	92.62	Jose's mother made 12 biscuits. Jose ate 5. How many biscuits are left? (5 12 17 7)
24-D	0	67.32	Elena ate 4 mamones and then ate 3 more. Chico ate 5 mamones. How many did they eat in all? (12 9 8 7)
24-E	0	63.28	Mrs. Lopez sold 4 chickens for 3 cordobas each. How much money did she make? (C$9 C$12 C$3 C$7)

(Table B, continued)

Item[a]	Percentage correct: Experimental	Percentage correct: Traditional	Description of exercise
25-A	87.80	76.84	Juan has 5 mangos, and eats 2. How many mangos does he have now? (3 10 7)
25-B	87.01	74.23	Eva has 3 toys. Manolo has 3 others. How many toys are there is all? (6 9 3)
25-C	71.95	66.67	Dora has 4 dahlias and 2 roses. How many flowers does she have in all? (2 6 8)
25-D	19.23	15.46	Maria has 6 carmels. Pedro has 5. Maria has more, how many more? (11 3 1)
25-E	79.01	76.29	Nina bought 6 oranges. Her mother gave her one more. How many oranges does Nina have now? (6 7 5)

[a]Items labeled A-E are G-items, those labeled I-V are I-items.

Table C

Performance of Second-grade students on 1976 Posttest

Item[a]	Percentage correct: Experimental	Percentage correct: Traditional	Description of exercise
1-I	74.56	58.33	Circle the largest number (59 73 75)
1-II	39.66	29.25	Circle the largest number (34 401 149)
1-III	68.87	69.48	Circle the largest number (43 47 51)
1-IV	53.04	36.73	Circle the largest number (923 479 150)
2-A	81.13	81.01	Circle 706 (706 760 607 76)
2-B	89.93	87.20	Circle 690 (69 690 960 96)
2-C	92.21	82.09	Circle 241 (142 421 251 241)
2-D	97.37	93.71	Circle 74 (40 74 47 70)
3-I	92.11	74.31	4 + 5
3-II	87.93	71.43	6 + 5
3-III	88.68	82.47	3 + 4
3-IV	96.52	72.11	3 + 2
4-A	62.89	74.68	Write 608
4-B	78.42	75.20	Write 71
4-C	97.40	84.33	Write 42
4-D	85.53	60.57	Write 237
5-I	84.21	77.78	Count the beans and write the number on the line (32 beans)
5-II	95.69	98.64	Count the beans and write the number on the line (8 beans)
5-III	83.96	78.57	Count the beans and write the number on the line (25 beans)
5-IV	92.17	81.63	Count the beans and write the number on the line (17 beans)

(Table C, continued)

Item[a]	Percentage correct: Experimental	Percentage correct: Traditional	Description of exercise
6-A	28.93	30.38	Write the value of this group of money: (C$25 C$10 C$5)
6-B	80.58	71.20	Circle the 4th soldier
6-C	96.10	79.10	Circle the 2nd soldier
6-D	73.68	44.00	Write the value of this group of money: (C$5 C$1 C$1 C$1)
7-I	57.89	48.61	73 + 6 = ___
7-II	77.59	56.46	90 + 5 = ___
7-III	83.02	71.43	8 + 0 = ___
7-IV	87.83	65.99	9 + 6 = ___
8-A	25.16	17.72	Circle the figure divided in thirds
8-B	73.38	71.20	Circle the figure divided in half
8-C	74.03	37.31	Circle the figure divided in fourths
8-D	85.53	74.86	Circle the figure divided in fifths
9-I	36.84	22.22	3 x 4
9-II	44.83	38.10	5 x 2
9-III	36.79	42.86	4 x 2
9-IV	33.91	19.73	32 x 3
10-A	81.13	60.13	How much is 30 plus 4?
10-B	71.94	77.60	How much is 7 plus 5?
10-C	59.74	48.51	How much is 33 plus 2?
10-D	82.89	53.14	How much is 8 plus 7?
11-I	78.95	52.08	9 - 0
11-II	64.66	36.05	4 - 4 = ___
11-III	76.42	53.25	8 - 6
11-IV	61.74	44.22	8 - 6 = ___

(Table C, continued)

Item[a]	Percentage correct: Experimental	Percentage correct: Traditional	Description of exercise
12-A	88.05	76.58	Jose's mother made 12 biscuits. Jose ate 5. How many biscuits are left? (5 12 17 7)
12-B	95.68	93.60	Pablo has 5 sticks. He finds 5 more. Write how many sticks he has now.
12-C	84.42	76.12	Elena ate 4 mamones and then ate 3 more. Chico ate 5 mamones. How many mamones did they eat in all?
12-D	97.37	93.14	Lopez has 3 white chairs and 6 yellow chairs. Write how many chairs he has all together.
13-I	58.77	28.47	96 − 72
13-II	62.93	41.50	58 − 27
13-III	65.09	36.36	66 − 64
13-IV	71.30	36.05	35 − 13
14-A	94.34	94.94	Circle the triangle.
14-B	75.54	78.40	Circle the parallel lines.
14-C	59.74	55.97	Tony and Chico's mother has 6 tortillas to divide between both boys. She gives each boy the same amount. Write how many tortillas each boy received.
14-D	73.68	58.29	Mr. Lopez sold 4 chickens for 3 cordobas each. How much money did he make? (C$9 C$12 C$3 C$7)

(Table C, continued)

Item[a]	Percentage correct: Experimental	Percentage correct: Traditional	Description of exercise
15-I	76.32	52.78	41 + 30
15-II	86.21	64.63	41 + 36
15-III	80.19	69.48	16 + 32
15-IV	78.26	41.50	504 + 132
16-A	53.46	50.63	How much is 2 times 3?
16-B	38.13	60.00	How much is 4 times 2?
16-C	66.23	27.61	How much is 3 times 5?
16-D	27.63	35.43	How much is 4 times 3?
17-I	43.86	26.39	53 - 2
17-II	38.79	21.09	68 - 5
17-III	39.62	29.87	76 - 5
17-IV	59.13	32.65	723 - 621
18-A	40.88	22.78	Write what time it is on this clock (4:00)
18-B	71.94	72.00	Which is the longest? (month day year)
18-C	28-57	48.51	Write what time it is on this clock (8:00)
18-D	94.74	74.86	Measure this pencil and write how long it is.
19-A	84.28	63.29	How much is 8 minus 4?
19-B	51.80	56.80	How much is 85 minus 5?
19-C	50.56	33.58	How much is 11 minus 4?
19-D	85.53	54.29	How much is 9 minus 4?

(Table C, continued)

Item[a]	Percentage correct: Experimental	Percentage correct: Traditional	Description of exercise
20-I	60.53	48.61	Circle the smallest number (59 73 75)
20-II	75.86	79.59	Circle the smallest number (13 10 8)
20-III	58.49	62.34	Circle the smallest number (41 38 36)
20-IV	82.61	75.51	Circle the smallest number (9 5 7)
21-I	62.28	48.61	26 + 3
21-II	94.83	82.31	5 2 + 2
21-III	19.81	22.73	14 - 7
21-IV	15.65	14.97	17 - 8
22-I	77.19	72.22	Here is some money (C$10). With this money Mr. Jose is going to buy a melon that costs 3 cordobas. Write how many cordobas will be returned to him.
22-II	74.14	61.22	Here is some money (C$5). With this money Mr. Jose is going to buy a melon that costs 3 cordobas. Write how many cordobas will be returned to him.
22-III	60.38	49.35	Here is some money (C$20). With this money Mr. Jose is going to buy a melon that costs 3 cordobas. Write how many cordobas will be returned to him.
22-IV	46.09	31.29	Here is some money (C$50). With this money Mr. Jose is going to buy a melon that costs 3 cordobas. Write how many cordobas will be returned to him.

[a]Items labeled A-D are G-items, those labeled I-IV are I-items.

APPENDIX C: TEACHER QUESTIONNAIRE USED IN 1976

The questionnaire text shown on the following pages is that prepared for teachers in the experimental group. Text changes to make questions appropriate for the control group, who did not use radio lessons, are shown in brackets [ ]. Such changes are to be found in the introduction to Part I, the introduction to Part III, and in the body of Part III, where the wording for control teachers uses the subjunctive.

Introduccion del Cuestionario

Usted es uno (a) de los profesores de este Departamento que han sido seleccionados para participar en una parte del trabajo de investigacion del Proyecto Matematica por Radio que este ano funciona en los Departamentos de Masaya, Granada y Carazo. Por esta razon, le estamos adjuntando un cuestionario. Sabemos que necesitara parte de su valioso tiempo para contestarlo, lo cual se lo agradecemos de antemano.

Su colaboracion es sumamente importante para nostros y posiblemente para Ud. ya que con ellos contribuiriamos al desarrollo de la educacion en Nicaragua.

La informacion que arroje el cuestionario nos proporcionara dos tipos de ayuda:

a. Para desarrollar un programa que este de acuerdo a las necesidades y deseos del maestro.

b. Para evaluar la efectividad del Proyecto mismo.

Todas sus respuestas se consideran estrictamente confidenciales. Ademas no es necesario que escriba su nombre; cada cuestionario tiene registrado un numero. El Proyecto no usara datos o nombres particulares de aquellas personas que participen en la investigacion.

Esperamos que respondan con el mayor grado de sinceridad ya que de ello depende la utilidad que obtendremos de su respuesta.

El cuestionario consta de cuatro partes:

La primera le pide que complete dos oraciones.

La segunda le pide que responda a unas oraciones que se refieren a la Matematica, la ensenanza de la Matematica, y el Magisterio como profesion.

La tercera le pide que responda a unas oraciones relacionadas con la instruccion por radio.

La cuarta parte se refiere a la informacion que tiene usted, sobre el Proyecto, a la situacion actual de su trabajo y ademas, se incluyen algunos datos personales.

Cada una de las partes del cuestionario lleva una instruccion introductoria en la parte superior de la hoja. Ahora, sirvase voltear la hoja para ubicar la Primera Parte. Este cuestionario le tomara aproximadamente cuarenta minutos para llenarlo.

Parte I

A continuacion aparecen dos oraciones incompletas. Sirvase completarlas en un parrafo expressando su propio criterio. En la completacion de las oraciones, puede extendarse lo que usted estime conveniente.

1. Cuando me pongo a pensar sobre la posibilidad de sequir utilizando la instruccion por radio, para ayudarme en la tarea de ensenar, entonces yo... [Cuando me pongo a pensar sobre la posibilidad de usar la instruccion por radio, para ayudarme en la tarea de ensar, entonces yo...]

---

2. Lo que mas temo con el uso de las lecciones por radio, para ensenar Mathematica es... [Lo que mas temo al usar las lecciones por radio, para ensenar Mathematica es...]

Parte II

La segunda y tercera parte tienen el mismo formato.

En la segunda parte deseamos obtener informacion acerca de lo que usted piensa de la Matematica, la ensenanza de la Matematica, y del Magisterio como profesion. Al respecto, le prestentamos 25 oraciones sobre las cuales usted debe responder.

Debajo de cada oracion aparecen 5 posibles respuestas en linea horizontal. Usted debe marcar, solamente, sobre una de las cinco respuestas. La respuesta que marque debe ser aquella que exprese su propio criterio.

Ahoro, busque abajo el ejemplo.

"Todos los ninos deben ir a la escuela, siquiera por corto tiempo."

----	----	----	----	----
!Si!	Si	?	No	!No!

Usted debe responder colocando una marca en uno de los cinco lugares degajo de la oracion usando la siguiente guia. Si usted esta absolutamente de acuerdo con la oracion, ponga una marca sobre el "!Si!". Si esta de acuerdo, pero no absolutamente, ponga la marca en el espacio "Si". Si no esta seguro, ponga la marca sobre "?". Si esta en desacuerdo con la oracion pongala sobre "No". Si esta absolutamente en desacuerdo con la oracion pongala sobre "!No!". Lo que sigue es un resumen de lo anteriormente explicado, lo cual le servira de clave, para llenar la segunda y tercera parte del presente cuestionario.

!Si! = absolutamente de acuerdo con la oracion

Si = de acuerdo con la oracion

? = no se; tengo dudas

No = en desacuerdo con la oracion

!No! = absolutamente en desacuerdo con la oracion

Parte II

Ponga atencion en que algunas de las oraciones tiena una forma negativa. Veamos los siguiente ejemplos:

Ejemplo a:

Los Pajaros no tienen alas.

!Si!	Si	?	No	!No!

La respuesta es evidente !No!, ya que los pajaros verdaderamente tienen alas, si Ud. hubiera marcado en !Si! estaria afirmando que los pajares no tiene alas, lo cual contradice la verdad de que ellos poseen alas.

Ejemplo b:

Los ninos no debieran asistir a la escuela.

!Si!	Si	?	No	!No!

Recuerde que tiene que responder de acuerdo a la oracion. Por ejemplo, si considera que los ninos deberian ir a la escuela tiene que marcar "!No!" o "No" lo cual indica que esta en desacuerdo con la oracion. Es decir considera que los ninos debieran de asistir a la escuela.

Si considera que los ninos no debieran asistir a la escuela, debe de marcar en "!Si!" or "Si", lo cual indicaria que esta de acuerdo con la oracion, es decir considera que los ninos no debieran asistir a la escuela.

Si entiende bien la oracion, no se detenga mucho tiempo en cada cuestier para responder, no piense en detalles. La mejor respuesta sera aquella auq acuda primero a su mente.

Parte II

1. A la mayoria de los ninos les gusta la Matematica.

----	----	----	----	----
!Si!	Si	?	No	!No!

2. Me siento mas seguro de mi mismo, cuando enseno Estudios Sociales, que cuando enseno Matematica.

----	----	----	----	----
!Si!	Si	?	No	!No!

3. En la vida particular, fuera de la escuela, me siento feliz resolviendo aquellos problemas en los cuales se aplica la matematica.

----	----	----	----	----
!Si!	Si	?	No	!No!

4. Los materiales sencillos le sirven mucho a los ninos, para captar los conceptos matematicos.

----	----	----	----	----
!Si!	Si	?	No	!No!

5. Me siento conforme cuando enseno Matematica.

----	----	----	----	----
!Si!	Si	?	No	!No!

6. Toma mas tiempo preparar una clase de Estudios Sociales, que una clase de Matematica.

----	----	----	----	----
!Si!	Si	?	No	!No!

7. En la escuela, la Matematica es mas importante que cualquier otra materia.

----	----	----	----	----
!Si!	Si	?	No	!No!

8. La Matematica es demasiado dificil.

----	----	----	----	----
!Si!	Si	?	No	!No!

9. De todas las materias, la Matematica es la causante principal del fracaso de los ninos en la escuela.

----	----	----	----	----
!Si!	Si	?	No	!No!

Parte II

10. A los ninos les gusta mas los Estudios Sociales, que la Matematica.

____	____	____	____	____
!Si!	Si	?	No	!No!

11. Me siento mas seguro de mi mismo ensenando la Matematica, que cualquier otra materia.

____	____	____	____	____
!Si!	Si	?	No	!No!

12. Es facil ensenar la Matematica.

____	____	____	____	____
!Si!	Si	?	No	!No!

13. El Magisterio es una profesion que ofrece mucha satisfaccion.

____	____	____	____	____
!Si!	Si	?	No	!No!

14. La mayoria de los ninos consideran que la Matematica es una asignatura facil.

____	____	____	____	____
!Si!	Si	?	No	!No!

15. Yo alentaria a mis mejores alumnos a seguir la carrera de Magisterio.

____	____	____	____	____
!Si!	Si	?	No	!No!

16. Comprendo la Matematica mas facilmente que otras materias.

____	____	____	____	____
!Si!	Si	?	No	!No!

17. Yo permaneceria en el Magisterio, aunque me ofrecieran un trabajo mas remunerado.

____	____	____	____	____
!Si!	Si	?	No	!No!

18. Los ninos consideran que la Matematica es la asignatura mas dificil.

____	____	____	____	____
!Si!	Si	?	No	!No!

Parte II

19. Es mas dificil ensenar matematica que cualquier otra asignatura.

----	----	----	----	----
!Si!	Si	?	No	!No!

20. La esenanza de la Matematica este ano, me ha agradado mas que la del ano pasado.

----	----	----	----	----
!Si!	Si	?	No	!No!

21. A mis alumnos de este ano les ha gustado mas la Matematica que a los del ano pasado.

----	----	----	----	----
!Si!	Si	?	No	!No!

22. Ensenar la Matematica este ano, ha sido mas dificil que el ano pasado.

----	----	----	----	----
!Si!	Si	?	No	!No!

23. Mi confianza en la ensenanza de la Matematica este ano, ha sido mayor que el ano pasado.

----	----	----	----	----
!Si!	Si	?	No	!No!

24. Se tomo mas tiempo preparar una clase de Matematica este ano, que el ano pasado.

----	----	----	----	----
!Si!	Si	?	No	!No!

25. Mis alumnos de este ano han encontrado la Matematica mas dificil que la del ano pasado.

----	----	----	----	----
!Si!	Si	?	No	!No!

Parte III

En esta seccion, nos gustaria saber que ideas tiene usted acerca del uso de la instruccion por radio. Las lecciones de Matematica que este ano se aplican en su grado, el ano que viene se transmitiran a un mayor numero de escuelas del pais. Tenemos mucho interes en adelantar algunas ideas sobre el posible impacto de la instruccion por radio, en los maestros y en los ninos. Por lo tanto, nos gustaria que usted respondiera las siguientes oraciones basado en sus experiencias personales con este Proyecto. Algunas oraciones le pediran que opine sobre su propia clase.

[En esta seccion nos gustaria saber que ideas tiene usted acerca del uso de la instruccion por radio. Este parte tiene 25 oraciones sobre las cuales debe responder en forma igual a la parte anterior. Es posible que usted nunca haya ensenado con la ayuda del radio. Por lo tanto, quizas tenga dificultades para respouder esta parte del cuestinario. Sin embargo, aunque nunca lo haya usado nos interesa saber que impresion tiene usted acerca de la instruccion por radio.]

[La instruccion por radio puede tener caracteristicas muy diversificadas. Pero el tipo instruccion que nosotros estamos disenando es muy especial y difiere a la comunmente conocida. Esta consiste, en transmisiones todos los dias dirigidas directamente al aula durante la hora correspondiente a la clase de Matematica. El tiempo empleado durante la transmision es aproximadament la mitad del que usted comunmente emplea en la clase de Matematica y los contenidos de las lecciones estaran sujetos estrictamente a los Programas Oficiales del pais.]

[El maestro del aula participara directamente durante la transmision de las lecciones por radio y tambien, realizara una serie de actividades durante la otra mitad de la hora escolar dedicada a la clase de Matematica. Para una eficiente coordinacion de las activitades, el programa por radio proveera a los maestros de una Guia. Para responder el cuestionario de esta Parte III, conviene que antes resolverlo, piense un poco sobre el de la instruccion por radio explicade arriba.]

[Ahora, conteste las siguientes oraciones tomando en cuenta siempre, el uso de la instruccion por radio anteriormente explicado.]

[Ahora, sirvase voltear la hoja para ubicar la Tercera Parte de este cuestionario.]

Parte III

1. La instruccion por radio causa [causara] aburrimiento a los ninos.

----	----	----	----	----
!Si!	Si	?	No	!No!

2. Yo daria mejor mi clase sin usar la radio.

----	----	----	----	----
!Si!	Si	?	No	!No!

3. Me gustaria seguir utilizando [usar] la instruccion por radio en mi aula.

----	----	----	----	----
!Si!	Si	?	No	!No!

4. Los ninos no saben escuchar bien. Por eso la instruccion por radio no los beneficia [beneficiara].

----	----	----	----	----
!Si!	Si	?	No	!No!

5. El problema de la instruccion por radio es que no les ofrece [ofreceria] suficiente oportunidad de participacion a los ninos.

----	----	----	----	----
!Si!	Si	?	No	!No!

6. Ojala que no tengo nunca la oportunidad de seguir usando [usar] la instruccion por radio en mi aula.

----	----	----	----	----
!Si!	Si	?	No	!No!

7. Me es [sera] facil utilizar la instruccion por radio en el aula.

----	----	----	----	----
!Si!	Si	?	No	!No!

8. Una transmision radial, a la misma hora todos los dias, no le da [dara] suficiente flexibilidad al maestro para ensenar mejor su clase.

----	----	----	----	----
!Si!	Si	?	No	!No!

Parte III

9. Los ninos encontraron [encontraran] emocionante la instruccion por radio.

----	----	----	----	----
!Si!	Si	?	No	!No!

10. Los ninos aprenden [aprenderian] mas si los maestros no usan la instruccion por radio.

----	----	----	----	----
!Si!	Si	?	No	!No!

11. Los maestros pueden [podran] descansar un poco durante las transmisiones.

----	----	----	----	----
!Si!	Si	?	No	!No!

12. La instruccion por radio disminuye [disminuiria] la importancia del maestro.

----	----	----	----	----
!Si!	Si	?	No	!No!

13. Escuchando las lecciones por radio los maestros pueden [podran] majorar su sistema de ensenanza.

----	----	----	----	----
!Si!	Si	?	No	!No!

14. La instruccion por radio puede [podra] hacer uso de materiales visuales.

----	----	----	----	----
!Si!	Si	?	No	!No!

15. La instruccion por radio interrumpe [interrumpira] la interaccion personal que debe de existir entre el maestro y los ninos.

----	----	----	----	----
!Si!	Si	?	No	!No!

16. La instruccion por radio ayuda [ayudara] al maestro de aula a organizar mejor sus lecciones.

----	----	----	----	----
!Si!	Si	?	No	!No!

17. Las lecciones por radio reducen [reduciran] el trabajo del maestro.

----	----	----	----	----
!Si!	Si	?	No	!No!

Parte III

18. Mediante la instruccion por radio, creo que los ninos pueden [podran] trabajar con materiales manipulables durante la transmision.

____	____	____	____	____
!Si!	Si	?	No	!No!

19. La instruccion por radio verdaderamente, no tiene [tendria] mucha efectividad.

____	____	____	____	____
!Si!	Si	?	No	!No!

20. El problema con la instruccion por radio es que no se puede ajustar al ritmo diferente con que avanzan los grupos de ninos.

____	____	____	____	____
!Si!	Si	?	No	!No!

21. Un obstaculo serio en el aprendizaje por radio es que los estudiantes no pueden [podrian] hacer preguntas.

____	____	____	____	____
!Si!	Si	?	No	!No!

22. La instruccion por radio ayuda [ayudara] a los maestros de aula a desarrollar mejores formas de evaluar a sus alumnos.

____	____	____	____	____
!Si!	Si	?	No	!No!

23. La instruccion por radio le facilita [facilitara] al maestro desarrollar mas temas de Matematica durante el ano.

____	____	____	____	____
!Si!	Si	?	No	!No!

24. La instruccion por radio hace [haria] a los estudiantes mas pasivos en la clase.

____	____	____	____	____
!Si!	Si	?	No	!No!

25. La instruccion por radio ayuda [ayudaria] a los padres a interesarse mas por la educacion de sus hijos.

____	____	____	____	____
!Si!	Si	?	No	!No!

Parte IV

1. Por favor, indique abajo el numero de veces, aproximadamente, que usted ha conversado con otras personas (amigos, otros maestros, personas del proyecto, etc.,) acerca del Proyecto Matematica por Radio.

   De 0 a 2 veces _____

   De 3 a 10 veces _____

   Mas de 10 veces _____

2. ?Entiende usted como se desarrollan las lecciones del Proyecto Matematica por Radio en las aulas?

   Entiendo muy bien _____

   Entiendo mas a menos _____

   Entiendo un poco _____

   No entiendo nada _____

3. ?Uso las lecciones de Matematicas por radio durante algun periodo del ano?

   Si _____ No _____

4. Si su respuesta anterior es "Si" encierre en un circulo los meses en los cuales uso las lecciones por radio.

   Febrero Marzo Abril Mayo Junio

   Julio Agosto Septiembre Octubre Noviembre

5. Indique su domicilio _____

6. Encierre el nombre del cargo que desempena.

   Director
   Director con grado a mi cargo
   Asistente
   Asistente con grado a mi cargo
   Profesor de grado

Parte IV

7. Encierre el grado(s) que tiene a su cargo.

primero segundo tercero

cuarto quinto sexto

8. Encierra la palabra "Si", si trabaja con grupos en la clase de Matematica o la palabra "No", si no trabajo con grupos en la clase de Matematica.

Si No

9. Si su respuesta fue afirmativa, indique el numero de grupos con los que trabaja en su clase de Matematica.

1 2 3 4 5

10. Encierre el intervalo en qu esta comprendida su edad.

de 15 a 20 anos

de 21 a 25 anos

de 26 a 30 anos

de 31 a 35 anos

de 36 a 40 anos

41 anos o mas

11. Encierre el intervalo que indique el numero de anos de ejerce en el Magisterio, incluyendo el actual.

menos de 2 anos

de 2 a 5 anos

de 6 a 10 anos

11 anos o mas

12. Encierre el intervalo que indique el numero de anos que tiene de impartir clases en el grado que tiene actualmente bajo su cargo, incluyendo el actual.

menos de 2 anos de 2 a 5 anos

de 6 a 10 anos 11 anos o mas

Parte IV

13. Encierre el intervalo que indique el numero de anos que tiene de trabajar en la escuela donde actualmente da clases, incluyendo el actual.

menos de 2 anos

de 2 a 5 anos

de 6 a 10 anos

11 anos o mas

14. Indique el nombre del Titulo o los titulos obtenidos.

Nombre del Titulo(s) _____

15. De el nombre de la institucion en la cual aprobo el ultimo ano de estudio.

Nombre de la Institucion _____

16. Indique la fecha en que aprobo el ultimo ano de estudio.

Fecha _____

17. Si esta estudiando actualmente, sirvase dar el nombre de la institucion y el tipo de estudio que realiza.

Nombre de la Institucion _____

Tipo de Estudio _____

18. Nos ha contestado muchas preguntas especificas. Reconocemos, sin embargo, que es posible que usted tenga algunas inquietudes sobre la Matematica y la instruccion por radio, las cuales no ha podido expresar libremente es este cuestionario. Por lo tanto, le invitamos a que manifeste sus inquietudes o comente algun tema o topico que considere no esta contemplado en el cuestionario. (Puede usar este espacio o usar el dorso de la hoja, tambien.)

_____

_____

_____

Appendix D: Report to the Smithsonian Science Information Exchange

FORM APPROVED
BOB NO. 105 R0002
EXPIRES 11/76

SSIE NUMBER

SMITHSONIAN SCIENCE INFORMATION EXCHANGE

Room 300 • 1730 M Street, N.W. • Washington, D.C. • 20036
Telephone (202) 381-4211 • Telex 89495

NOTICE OF RESEARCH PROJECT

SUPPORTING ORGANIZATION: Agency for International Development

SUPPORTING ORGANIZATION NUMBER(S): Contract No: and/or Control No: AID/CM-ta-C-73-40

PROJECT TITLE: Application of Radio to Teaching Mathematics in a Developing Country

INVESTIGATOR(S): Patrick Suppes

DEPARTMENT/SPECIALTY, School or Division: Director
Institute for Mathematical Studies in the Social Sciences
Stanford University

PERFORMING ORGANIZATION:

Name and Address: Including Zip Code.
IMSSS, Ventura Hall
Stanford University
Stanford, CA 94305

PERIOD FOR THIS NRP:

Start Date: 1973
End Date: 1979
Annual Funding: $400,000

PROJECT SUMMARY: Be brief-200 word maximum: (Include Objective, Approach, Current Plans and/or Progress)

ABSTRACT

The Radio Mathematics Project was established to design, implement, and evaluate a prototype system of teaching elementary mathematics using radio as the major medium of instruction. The project, working in rural and urban primary schools in Nicaragua, presents daily mathematics lessons in first-, second-, and third-grade classrooms. A lesson has a radio and a postbroadcast portion, each about 30 minutes in length. Radio lessons are constructed from segments of instructional material and entertainment activities, both of which require a high level of active responses from the children. In its work thus far, the project has found (a) that first-grade children can learn new mathematical concepts and skills from instruction given by radio and supplemented by a student worksheet, (b) that children remain attentive and responsive for a half-hour radio lesson, provided they have the opportunity to respond frequently, and (c) children are able to respond at the high rate of three to four times a minute. The children enjoy the instructional segments of the project lessons. Although they provide a change of pace, the entertainment segments are not necessary for maintaining the children's attention. Test results indicate that children in radio classrooms perform better than children in traditional classrooms on all topics taught by the radio.

SI-SSIE 76