AGENCY FOR INTERNATIONAL DEVELOPMENT
WASHINGTON, D. C. 20523

**BIBLIOGRAPHIC INPUT SHEET**

FOR AID USE ONLY
Batch 6

1. SUBJECT CLASSIFICATION
A. PRIMARY: Food production and nutrition — AE10-0000-0000
B. SECONDARY: Agricultural economics

2. TITLE AND SUBTITLE
User's guide for the beef cattle enterprise simulation model

3. AUTHOR(S)
Jaske,M.R.

4. DOCUMENT DATE: 1976
5. NUMBER OF PAGES: 156p.
6. ARC NUMBER: ARC

7. REFERENCE ORGANIZATION NAME AND ADDRESS
Mich.State

8. SUPPLEMENTARY NOTES (Sponsoring Organization, Publishers, Availability)
(In Computer Library for Agr.Systems Simulation. CLASS doc.no.11)
(Suppl.to author's diss.,332p.:PN-AAD-088)

9. ABSTRACT

This user's guide is written to allow operation of the computer simulation model of a general beef cattle enterprise. The major emphasis of the model is on the land extensive cow/calf form of operation in which the breeding of cows results in the sale of calves. The model assists managers to evaluate and to investigate ways to make decisions in a beef cattle enterprise and the operation of the enterprise through the course of a year. Chapter 1 describes the model and the basis for its operation. Chapter 2 lists and defines all the state and control variables used. Chapter 3 lists the instructions necessary for operating the model. Chapter 4 gives a complete listing of the model's program and the subroutines used in it. Those who want to use these routines at locations other than Michigan State University or with compilers different from the CDC FTN4 should check local consultants for incompatabilities which must be resolved.

10. CONTROL NUMBER
PN-AAD-982

11. PRICE OF DOCUMENT

12. DESCRIPTORS
Beef cattle
Computer programs
Manuals
Models
Simulation

13. PROJECT NUMBER

14. CONTRACT NUMBER
CSD-2975 Res.

15. TYPE OF DOCUMENT

AID 590-1 (4-74)

THIS DOCUMENT HAS BEEN EVALUATED AS SUBSTANDARD COPY FOR ROUTINE REPRODUCTION. EFFORTS IN AID/W TO OBTAIN A MORE ACCEPTABLE COPY OF THE DOCUMENT HAVE NOT BEEN SUCCESSFUL. DESPITE THIS DISADVANTAGE, WE HAVE CHOSEN TO REPRODUCE THE DOCUMENT BECAUSE OF THE SUBJECT TREATED AND TO MAKE THE DISCERNIBLE INFORMATION AVAILABLE.

# USER'S GUIDE

# FOR

# THE BEEF CATTLE ENTERPRISE SIMULATION MODEL

Michael R. Jaske

COMPUTER LIBRARY FOR AGRICULTURAL SYSTEMS SIMULATION

CLASS Document No. 11

Agricultural Sector Analysis and Simulation Projects
Supported under Contract AID/csd-2975
U. S. Agency for International Development

Department of Agricultural Economics
Michigan State University
East Lansing, Michigan

July, 1976

TABLE OF CONTENTS


| | Page |
|---|---|
| INTRODUCTION | 1 |
| Chapter | |
| I. THE BEEF CATTLE ENTERPRISE SIMULATION MODEL | 2 |
| II. VARIABLE DEFINITIONS | 25-38 |
| III. USER INSTRUCTIONS | 39 |
| Program Restarts | 41 |
| Initial Program Starts | 45 |
| IV. PROGRAM AND SUBROUTINE LISTINGS | 53 |
| REFERENCES | 149 |

LIST OF TABLES


| | | Page |
|---|---|---|
| Table 2.1 | Definition of Crop and Cattle Expense Variables | 22 |
| Table 2.2 | Definition of Resource Variables | 23 |
| Table 2.3 | Parameter Values and Definitions for Production Cost Element of the Financial Component | 24 |
| Table 3.1 | Initialization Requirements | 46-49 |
| Table 3.2 | Supplimentary Initialization Requirements | 50-51 |
| Table 3.3 | Additional Initialization Requirements | 51-52 |
| Table 3.4 | Additional Initialization Requirements | 52 |

## LIST OF FIGURES


| | | Page |
|---|---|---|
| Figure 1 | Enterprise system diagram illustrating physical and information flows between components | 4 |
| Figure 2 | Flow diagram of the management decision making component in relation to the simulation model | 8 |
| Figure 3 | Block diagram of subroutine HDMOG4 | 11 |
| Figure 4 | Flow chart of subroutine INQUIR of the management component | 19-20 |
| Figure 5 | Flow chart of subroutine RESPNS of the management component | 21 |
| Figure 6 | Sample input cards to restart the simulation model from the spring growth decision point | 44 |

# COMPUTER LIBRARY FOR AGRICULTURAL SYSTEMS SIMULATION

The Computer Library for Agricultural Systems Simulation (CLASS) is one of the four major activities of the Agricultural Sector Analysis and Simulation Projects at Michigan State Unviersity under U. S. Agency for International Development Contract AID/csd-2975. The other three major interrelated project activities include theoretical and methodological research, the Development Analysis Study Program, and field activities, primarily in the Republic of Korea.

The project objective is to develop an approach to institutionalizing an analytical capacity for planning, policy formulation, program development, and project implementation for agricultural sector development within the public decision making structure of developing countries. A major component of the analytical capacity is a series of system simulation models tailored to the needs of the individual country. Much of the experience gained from the field activity and the knowledge gained from the theoretical and methodological research added to the present stock of knowledge about building and maintaining analytical capacities for agricultural sector development can be preserved and extended in the training provided through the Development Analysis Study Program and in the stock of model, component, and utility routine computer software documented in the Computer Library for Agricultural Systems Simulation.

In full operation, the Computer Library for Agricultural Systems Simulation (CLASS) acquires, catalogs, maintains and distributes computer programs and associated documentation. These computer programs are of generalized simulation models, components, and routines designed specifically for the analysis of agricultural development problems and processes. In particular, the library sets standards of admissibility for programs and documentation; catalogs and indexes programs and documentation so as to facilitate their retrieval by users seeking a set of programs to be used in a specific problem analysis; and distributes programs and documentation to users.

To enhance the effectiveness of the library, its functions also include identifying and soliciting needed models; actively bringing programs and documentation up to the library's standards; and providing limited consultation in identifying and implementing appropriate library programs for a particular application. A subsidiary function of the library in conjunction with the identification and solicitation of models is to survey and catalog ongoing research in agricultural systems modeling and simulation.

The CLASS document publication series is the main vehicle for informing potential users of the substance of CLASS holdings and activities.

July, 1976

George E. Rossmiller
Director
Agricultural Sector Analysis and
Simulation Projects

# INTRODUCTION

This User's Guide is written to allow operation of the computer simulation model of a general beef cattle enterprise, as described in Jaske[1]. More specifically, the land extensive cow/calf form of operation in which breeding of cows results in sales of calves is the major emphasis of the model. The model is designed to assist management in evaluating and investigating decision-making strategies. These decisions may be either ones of investment in a particular enterprise, or ones concerning operation of the enterprise through the course of a year.

Four chapters are included to provide sufficient background for operation of the model independent of the main dissertation[1]. Chapter I is a brief description of the simulation model and the basis for its operation. Chapter II enumerates and defines all state and control variables used in the model. Chapter III lists the actual instructions necessary for operating the model. Chapter IV gives a complete listing of the model's program and the many subroutines used in it.

This volume is meant to provide sufficient background for intelligent use of the model, but questions concerning the model's development and the rationale for particular mathematical structures must be answered by consultation with Jaske[1] and Schuette[3].

# CHAPTER ONE

## THE BEEF CATTLE ENTERPRISE SIMULATION MODEL

This chapter will discuss a simulation model of a general beef cattle enterprise. Although all general characteristics of such enterprises are included in the model, the emphasis here is on a land-extensive, forage-producing, cow/calf breeding operation. All processes of this system except land allocation and crop production have been modeled; these processes must be handled through initialization data supplied by the user.

The system model developed for this general beef cattle enterprise consists of five major components and several secondary ones. Major components are

(1) cattle demography

(2) forage growth on the range land

(3) feed stock accounting

(4) nutrient impacts on growth and reproduction

(5) management decision making.

Secondary components are ones controlling the input of exogenous variables to the model from prespecified time patterns, maintenance of proper expected prices into the future over time, and most importantly, the financial component. These components represent all of the facets of the beef cattle enterprise except land allocation and crop

production. These exceptions are handled in the model through fixed land allocations and by arbitrarily specified quantities of crop production over time.

The cattle enterprise as a system is quite complex, involving biological material transformations, photosynthetic energy conversion, and extensive non-linear control over these processes through the actions of the decision-making management, which is mainly responsive to economic considerations. Only a simulation model incorporating the structural aspects of the system can hope to provide a realistic description of the dynamics of these processes through time. Such a simulation model can be characterized as highly non-linear, highly discontinuous, and describable only in the detail typical of computer programs. Figure 1 illustrates the physical and information flows interconnecting the components of the system model. It also indicates the exogenous variables affecting the system.

The component with the greatest impact on the system is the cattle demography component. Three major processes are represented within this component. The first is the birth of calves; this is a function of the breeding policy of the management, the age distribution of the breeding cow herd, the nutrient intake of the herd over time, and the time interval between the previous calving and breeding. The second major process is the death of animals. Deaths can be attributed to old age or to premature events such as disease, weather, or accidents. The final process that this component includes is maturation of animals within the herd. Maturation is the key to the behavior of different

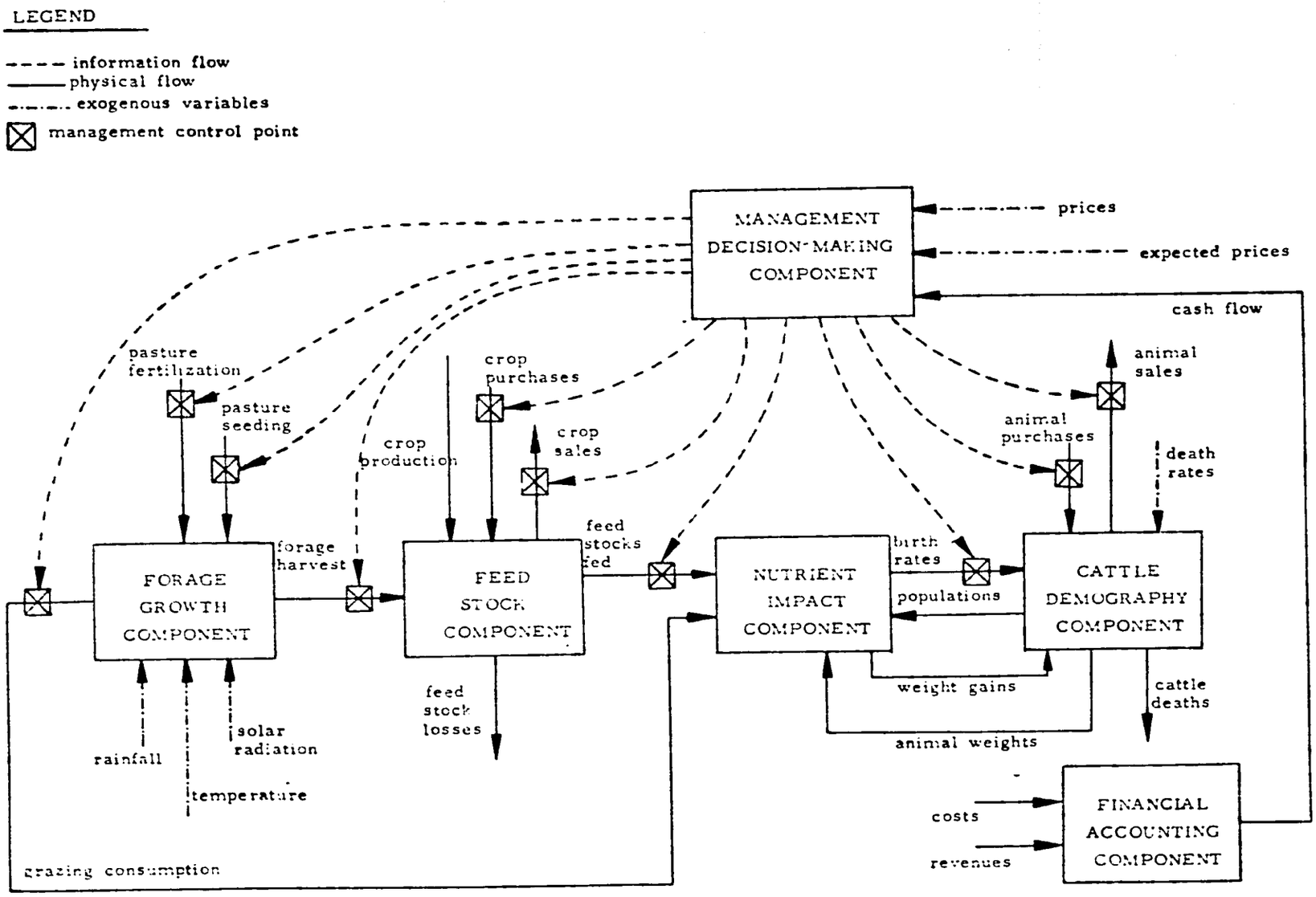


Figure 1. Enterprise system diagram illustrating physical and information flows between components

classes of animal within the herd and will be described primarily with the variables of age and weight.

Another important component is that of forage growth. This component must represent the growth and harvest of forages on a dynamic basis over the growing season. Plant growth is a response to the exogenous variables of weather--solar radiation, average temperature, and rainfall. More important than actual rainfall is the level of soil moisture that is available to the root system to transport up the stem to the leaf structure of the plant. Soil moisture must be determined through the influence of evaporation and percolation of water down below the effective depth reachable by roots, as well as by rainfall. Soil nutrients such as nitrogen, phosphorus, and the trace metals are also important to growth, but the modeling of their exact mathematical relationships is not well known. Digestibility of forages is another important factor in determining the nutritional impact of grazing on cattle. Grazing and mechnical harvesting of forage are the methods of forage removal which are included in the model.

Another component of the model is accounting for feed stocks. This aspect of the model is much less complicated than any of the others, because relatively little is involved other than actual accounting for incomes and outgoes of material. Feed stock purchases and sales are determined exogenously through the interactive management component. Feed stocks used as cattle feed are a result of the level of feed allocation to the herd and of the distribution of that allocation among the possible crops. Feed stock losses are also

determined in this model. Crop production, although exogenously determined in this particular system study, is also a factor affecting the overall level of feed stocks. The last element of this component model is determination of the total digestible nutrient (TDN) value of the feed stock. TDN is used as the index of nutrient value because of its widespread acceptance and the availability of information in this format.

The nutrient impact component develops the effects of feed inputs on the cattle herd. The major processes included here are growth of animals through weight gain and reproduction resulting in births. The growth process is highly influenced by the quantity of digestible nutrients consumed by cattle. The requirements of body maintenance and of growth are met differently by the same feed input; this requires that the energy values for weight maintenance and weight gain be available for each feed stock consumed. When the requirements of body maintenance are fulfilled, any excess energy intake can be applied toward growth or toward other production processes. Reproduction is quite responsive to energy levels available to the breeding females, especially in young heifers being brought into the breeding herd for replacements. The physical processes of estrous cycling in females, both mature and immature, are determined in this component.[1] The productive use of the reproductive condition of the herd is under the control of the herd manager through the breeding policy that is selected for use.

Management decision making constitutes the last component of this enterprise model. Because the model is oriented toward providing a

manager with a tool to improve his decisions, this component is very important. The component is constructed as an expression of the belief that optimization is not an appropriate approach for the questions that this study attempts to address. The reasons for this belief can be briefly summarized as follows: (1) the decision controlling the breeding action are highly dependent on the long time delays before productive revenue is possible, (2) herd management of reproductive animals is highly dependent on the future prices expected, and (3) animal prices are unstable and highly volatile (especially in the recent past). The substitute for optimization of decision is exogenous supply of control variable values. This means that whenever straightforward economic criteria cannot be explicitly used to make a decision, the management component requires an input of control values. The values used are up to the user. This technique provides an opportunity for the user to explore alternative control values based on his intuition and knowledge of the behavior of the system.

Figure 2 illustrates the structure of the management component as well as its relationship to the remainder of the simulation model components. Decision point is the term used to describe situations requiring exogenous user control. Standard decision points are such natural occasions or phenomena as spring growth onset, breeding, weaning, and culling. Special decision points exist when particular state variable values are incompatible with intended actions; these

---

[1]Developed by Margaret Schuette in partial fulfillment of the M. S. requirements, Department of Animal Husbandry, Michigan State University

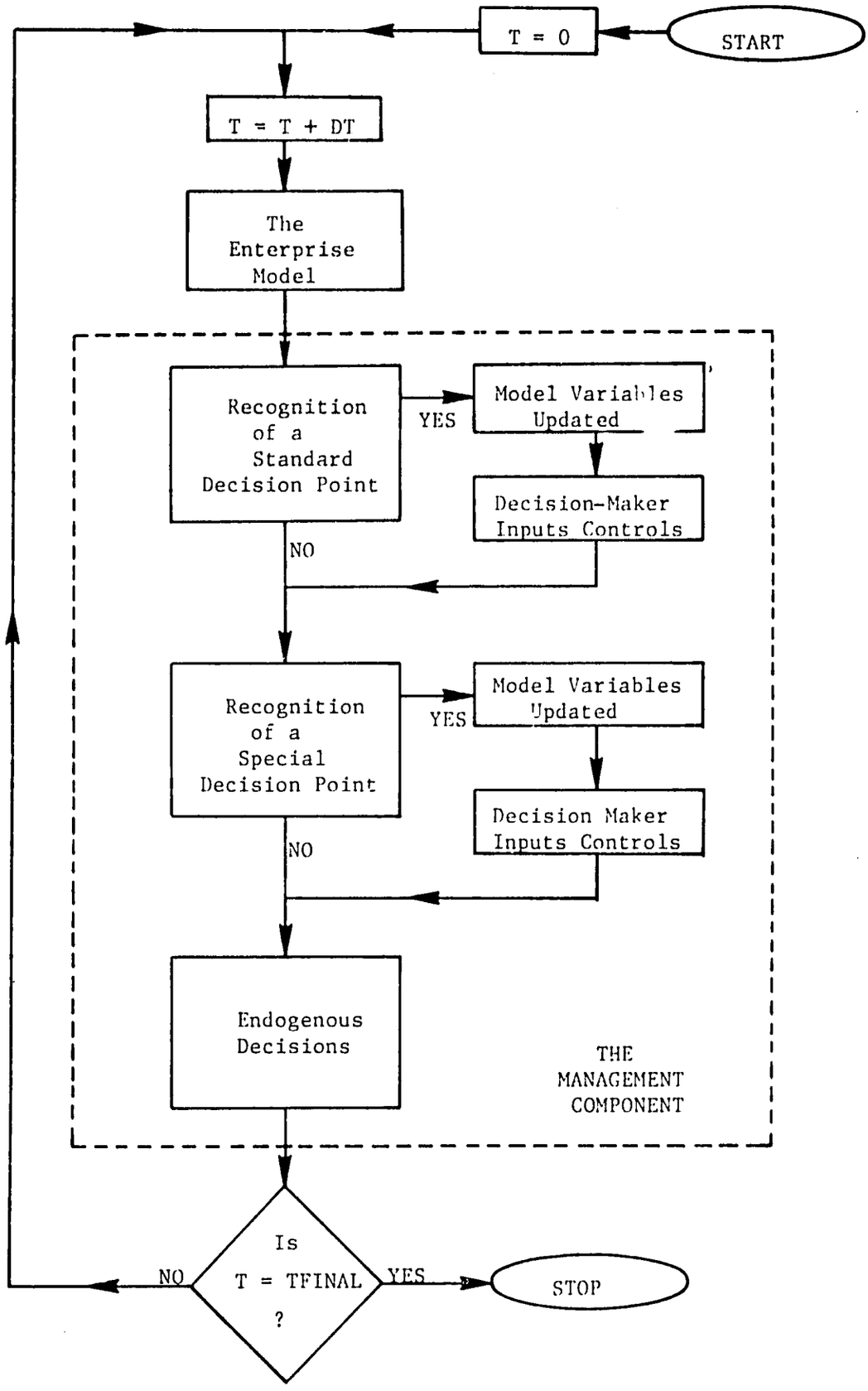


Figure 2. Flow diagram of the management decision-making component in relation to the simulation model

might be low levels of working capital, feed stock levels insufficient for planned levels of feeding during the upcoming time increment, or feed levels at the beginning of the wintering period insufficient for projected needs over that period. A batch interactive structure for the model allows a permanent file to store all state and rate variable values at a decision point while the user decides upon control variable values at his leisure, then restarts the simulation by reading from this permanent file and the source input for control variable values.

A. Cattle Demography Component

The demographic component is based on a disaggregation of the herd into reasonably homogeneous cohorts of animals based on sex, function, and degree of maturity. Nine herd cohorts are used:

(1) mature breeding cows

(2) replacement heifers

(3) bred heifers

(4) breeding bulls

(5) young bulls

(6) steers

(7) male calves

(8) female calves

(9) slaughter heifers.

Although this level of disaggregation seems quite extensive, it is still too coarse for purposes of modeling nutrient impacts and for exploration of realistic management decision making. Subpopulations

within each of these cohorts are defined on the basis of relative maturity. Maturity is a concept which is correlated with age but which can depart from it significantly.

The key to the herd demographic model is recognitiion that maturity can be described by a distributed parameter time delay. For example, an average time for breeding cows to mature from their first pregnancy to old age exists, but there are significant variations above or below this average. A common model for such time delays is given by a high order differential equation relating the input flow rate, x(t), to the output flow rate, y(t).

$$a_k \frac{d^k y(t)}{dt^k} + a_{k-1} \frac{d^{k-1} y(t)}{dt^{k-1}} + a_0 y(t) = x(t) \tag{1}$$

Laplace transformation of (1) gives

$$Y(s) = \prod_{i=1}^{k} \frac{X(s)}{(D_i s + 1)} \tag{2}$$

which suggests that a cascade of first order time delays can be devised to represent the $k^{th}$ order differential equation modeling the distributed parameter time delay of interest. A beneficial advantage of this approach is that the intermediate rates which result, separating the input and output rates, can be manipulated to provide populations at that stage in the delay process. The component model of cattle demography has at its heart a representation for each herd cohort as a delay process with flows interconnecting many of the delays to represent the overall process of maturation from birth to death.

Figure 3 presents a flow chart of subroutine HDMOG4 which simulates the maturation process of cattle over time and maintains

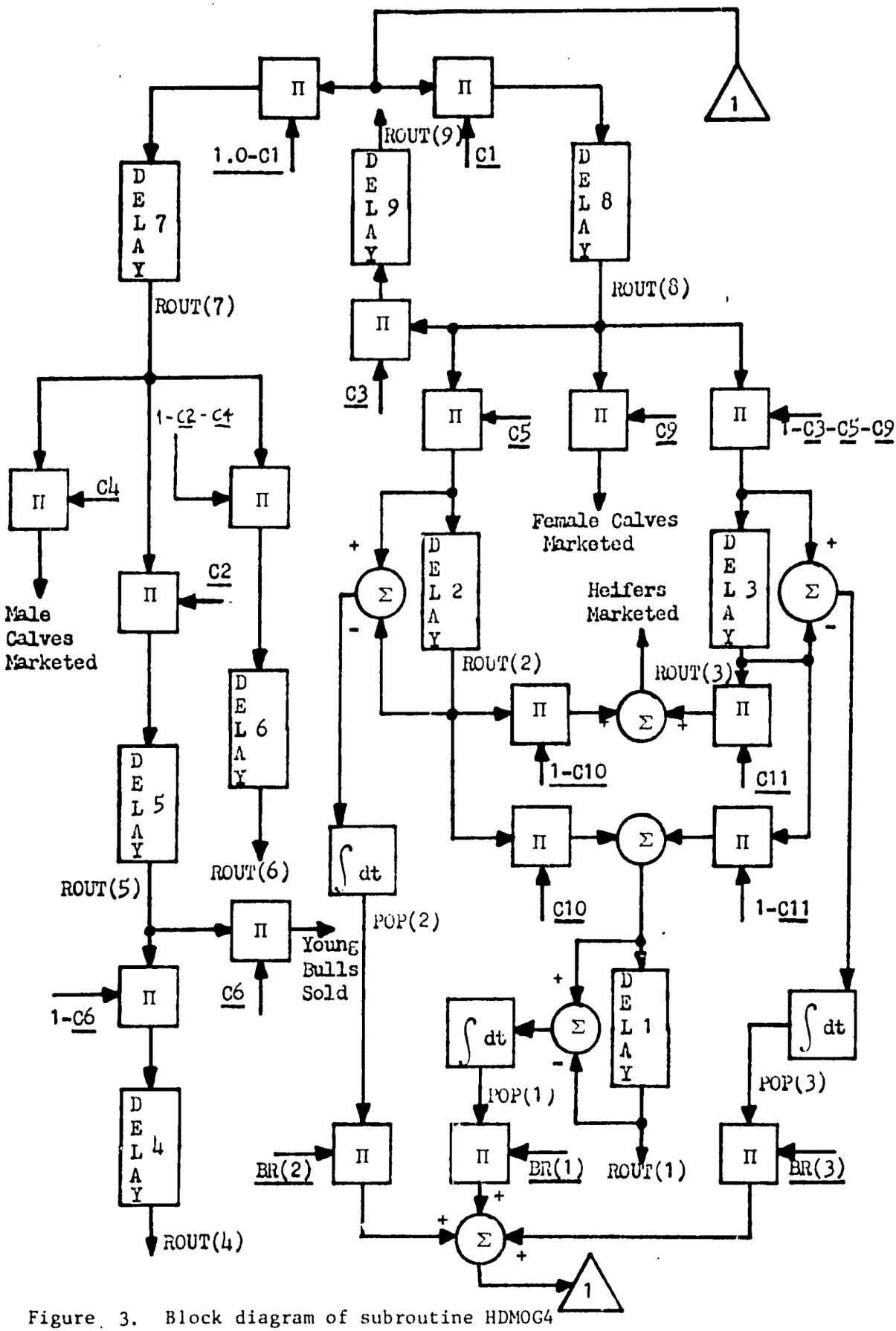


Figure 3. Block diagram of subroutine HDMOG4

population values for each cohort and the subpopulations within that cohort. Numerous control variables exist which represent the direction over herd maturation which management exercises to achieve its goals. For example, variable C3(t) controls the proportion of the output rate of the female calf cohort which enters the slaughter heifer cohort. Cohort numbering on this diagram corresponds to the order of listing in the enumeration of cohorts above.

Death rates for each cohort are modeled as losses from the cohort delays through time. A model of the time delay which is not flow conserving was adopted to allow for such losses as well as those which occur as a result of removing cattle from the cohort (or adding to it). FORTRAN subroutines accomplishing many distributed and discrete time delays are readily developed. Some typical properties that have been modeled are uniform proportional losses from each subpopulation, time-varying delays, individual subpopulation time delays, and individual subpopulation loss rates.

A vitally important process which is modeled in the demographic component is birth of calves. The breeding pattern established during the prior breeding interval as a result of the timing and duration of the breeding interval in conjunction with the previous nutrient intakes of reproductive females manifests itself in the birth of calves. The model of this process establishes a time-depenent curve of total accumulated births for each of the three female cohorts--mature breeding cows, replacement heifers, and bred heifers. Births are determined by numerically approximating the derivative

of this curve through time to give an instantaneous annual birth rate and multiplying this value by the number of animals in each cohort which are capable of giving birth. The birth of calves as a flow process is graphically illustrated in the flow diagram of subroutine HDMOG4 (Figure 3) in the lower right quadrant.

The final process included in the demographic component is weight gains (or losses). Each subpopulation of the demographic model is treated as if it were homogenous and has associated with it an average weight. Weight changes to that subpopulation designation occur through weight changes actually happening to those animals from nutrient intake and requirement interactions and from animals moving into that subpopulation designation from the next less mature group. Balancing these two sources of weight change for a particular subpopulation is handled through use of the idea of the average time spent in a specific subpopulation designation. For example, cohort 1 (mature cows) has an average time delay of 10 years and 10 stages giving an average of one year per stage. With a simulation time increment of 0.05 years, approximately 5% of the animals in any subpopulation of cohort 1 "mature from" their current subpopulation to the next oldest group. Weights in each subpopulation are thus a weighted average 95%, based on animals previously in that subpopulation and 5%, based on animals maturing into that subpopulation from the one next youngest. This mechanism allows for weight gains and losses from both aging of cohort populations and nutrient intake/requirement interactions for particular subpopulations.

B. Forage Growth Component

The forage growth component is important to this system model because of the high use which is made of forage growth by cow/calf operations, whether grazed directly or mechanically harvested and stored for winter feeding. The growth model outline here is based largely on the work of Parton and Marshall [2], but it is extensively modified, especially in the digestibility aspects. Solar radiation is the main driver of forage growth, but it is constrained by the levels of average temperature, soil moisture, and soil nutrient through use of normalized indices to reflect the quality of these variables in promoting growth. The rate of growth per hectare is then

$$PHOTO_n(t) = ACTIVE_n(t)*PHOMAX*SOLAR(t)*MIN \qquad (3)$$

where:

$PHOTO_n(t)$ = total plant growth rate in land parcel n--kg/hec/day

$ACTIVE_n(t)$ = active plant material in land parcel n--kg/hec

PHOMAX = conversion factor, 0.0004 kg/langley/day

SOLAR(t) = solar radiation in langley/day

MIN = minimum of the three growth quality indices.

This rate must be partitioned into the fraction going to greenery growth and the fraction going to energy storage in the roots. Since the quantity of greenery and indirectly the storage energy in each land parcel is a function of the previous grazing and harvesting activity, the proportioning factor $ZX3_n(t)$ is determined separately for each land parcel.

$$ZX3_n(t) = PAR3 + PAR4*\left(1.0 - e^{-PAR5*GRN_n(t)/LAND_n}\right) \qquad (4)$$

where:

$ZX3_n(t)$ = proportion of $PHOTO_n(t)$ going to root storage

PAR3, PAR4, and PAR5 are constant parameters

$GRN_n(t)$ = quantity of greenery in land parcel n--kg.

A transfer of growth energy from the roots to the greenery occurs at a rate that is largely controlled by the proportions of plant material that are in equivalent root storage and greenery. This accounts for the spurt of growth observed after a field has been heavily cropped. The rate of greenery growth from root storage is given by

$$F_n(t) = PAR1*ROOT_n(t)*e^{-GRN_n(t)/PAR2*LAND_n} \tag{5}$$

where:

$F_n(t)$ = rate of material transfer from roots to greenery--kg/hec/day

$LAND_n$ = area of land parcel n--hectares

$ROOT_n(t)$ = equivalent material in root storage--kg/hec

PAR1, PAR2 are constant parameters.

Overall rate equations for forage greenery and root storage growth must include animal grazing and mechanical harvesting before being complete. Additionally, neither of these processes of removal is clean; that is, what is consumed by animals and stored after harvesting is less than what is removed from the field due to losses. When such losses are included, then the following rate equations apply:

$$\frac{dROOT_n(t)}{dt} = PHOTO_n(t)*ZX3_n(t) - F_n(t) \tag{6}$$

$$\frac{dGRN_n(t)}{dt} = PHOTO_n(t)*[1.0 - ZX3_n(t)] + F_n(t)*LAND_n - AWF_n(t)*AHR_n(t) - MWF*MHR_n(t) \tag{7}$$

where:

$AHR_n(t)$ = animal grazing rate in land parcel n--kg/day

$AWF_n(t)$ = animal grazing wastage factor in land parcel n

$MHR_n(t)$ = mechanical harvesting rate in land parcel n--kg/day

MWF = mechanical harvesting wastage factor.

The quantity and quality of forage growth consumed by animals are equally important to determination of nutrient impacts. $DIGEST_n(t)$ describes the quality of forage in land parcel n in terms of total digestible nutrients (TDN) on a dry basis. Digestibility is a dynamic variable that reflects changes in average plant composition and in the actual energy content of different plant parts. Since this component model does not maintain forage quantities on the basis of constituent parts, a less rigorous approach to digestibility determination is required. Digestibility is modeled as a function of three factors: relative age of green material, time of season, and animal forage density. The base digestibility value (in terms of % TDN on a dry matter basis) is determined by the relative age of the green material in each land parcel. Seasonal digestibility decline and decreasing digestibility with decreasing quantity per animal are secondary factors which act to lower the base value when appropriate. This model formulation assumes that the major element in the change of forage digestibility is a process of decline associated with the length of time since growth first started.

C. Feed Stock Accounting

This model component is by far the simplest of the entire model; it only computes the current quantity and quality (TDN) for each feed stock on hand. Feed stocks can be produced, purchased, sold, fed to cattle, or lost to pests. The rate of change of feed stocks is a result of the varying quantities gained or lost. The TDN quality of these feed stock quantities is a function of the quantity retained from the previous period, its rate of spoilage over time, the quantities purchased and harvested, and their original TDN value.

D. Nutrient Impacts

This component determines the impacts of nutrient allocation to the herd as a result of the physiologic demands of individual classifications of herd animals. Effects on weight gains (or losses) are determined through interaction between energy requirements and energy supply from allocated feed stocks and grazed forage. Effects on reproductive potential are also determined as a result of nutrient intake over time. Nutrients are modeled strictly in terms of total digestible nutrients (TDN), which is a description of the energy content. Other descriptors, such as protein, vitamins, and trace minerals, are not explicitly modeled and are assumed to be available in sufficient quantities to allow the growth and reproductive effects that are predicted. Schuette [3] should be reviewed for the details of the physiologic processes modeled and the basis for the model used here.

E. Management Decision-Making

The management decision-making component of the enterprise simulation model is an interactive group of subroutines which operates in a batch mode. Decision point is the term used to characterize a type of decision which the endogenous decision rules of the component are not capable of handling. When any of these decision points are encountered, the model stops the simulation and awaits user supplied control variable values. The user prepares data cards to implement his decisions and then restarts the simulation which reads his data cards and continues the simulation using endogenous decision rules until the next decision point is encountered. The reason for this mixed endogenous/exogenous decision-making component is that a broad selection of realistic control variables is desired to make the simulation of the enterprise behavior as good as is possible, but the ability to create adequate decision rules employing the control variables does not currently exist. The primary reason for this fact is that the nature of the decisions involving the cow/calf breeding operation is extremely complex.

Figures 4 and 5 illustrate the structure of the two subroutines which act to recognize the decision points as they occur through time and read in the control variable sets which the user develops to implement his decision. Figure 4 is the flow chart of subroutine INQUIR which recognizes the regular decision points which are such typical activities as breeding, weaning, and culling. Special decision points are also recognized by INQUIR; these are such events as working capital falling too low, feed stocks unable to cover feed allocations, etc. Figure 5 is a flow chart of the subroutine which reads in control values.

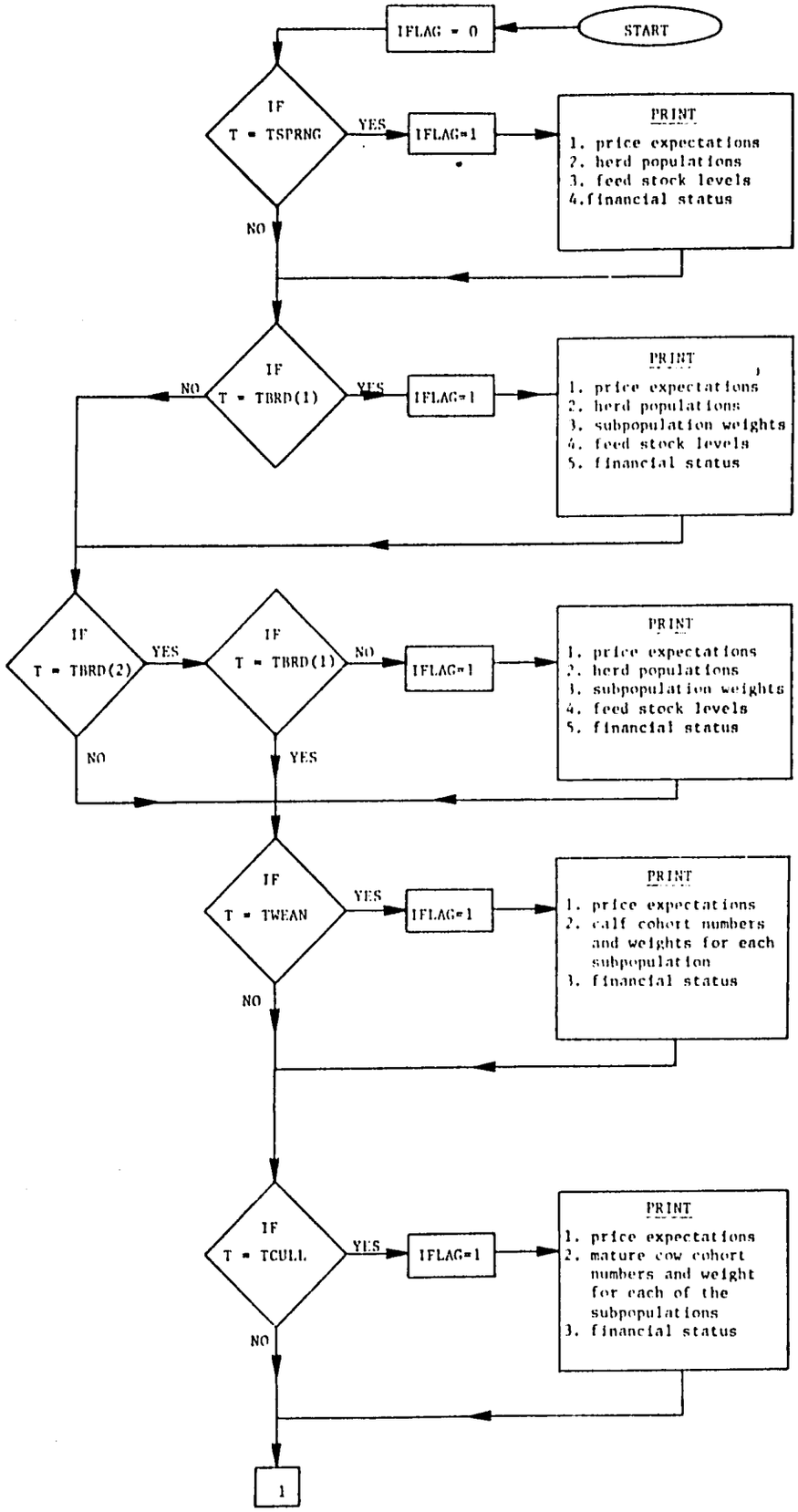


Figure 4. Flow chart of subroutine INQUIR of the management component

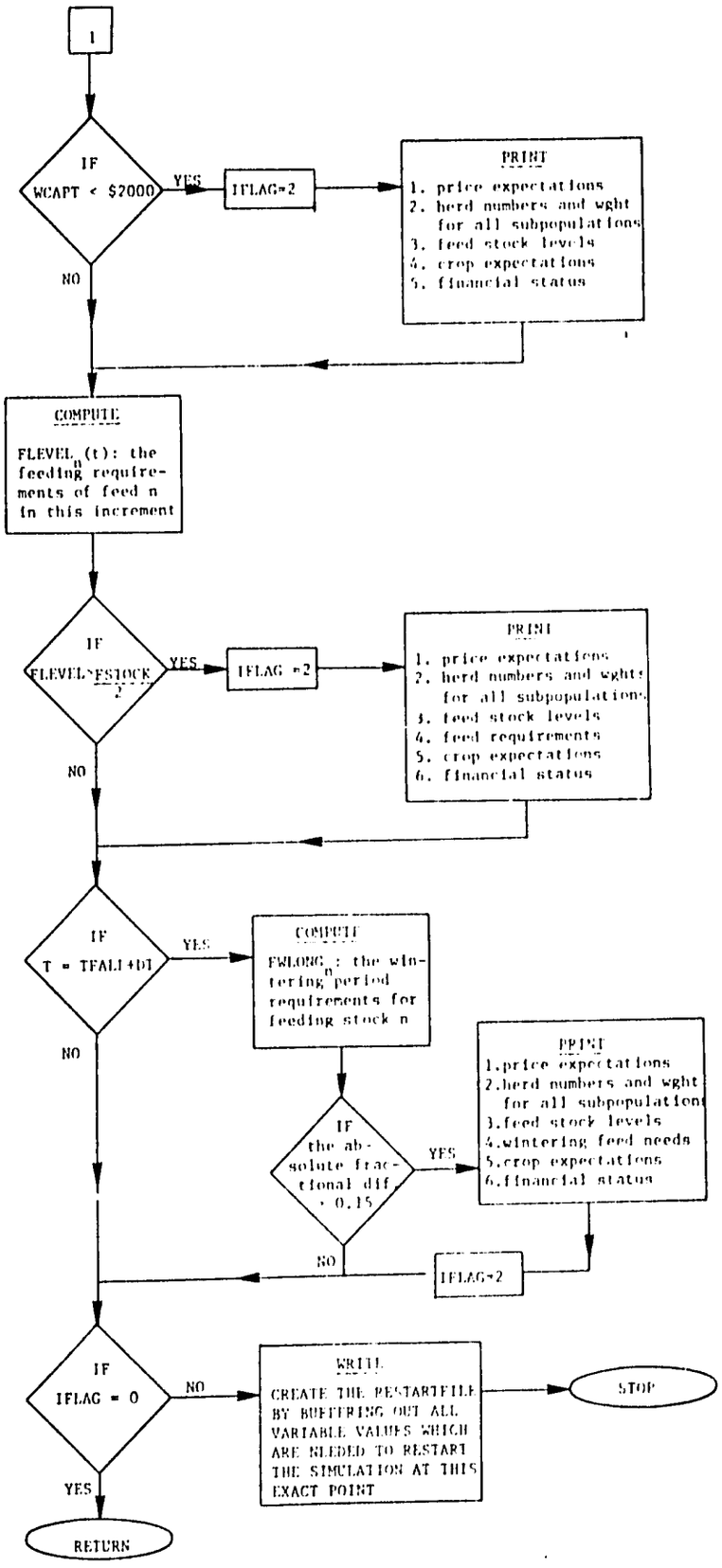


Figure 4. (cont'd.)

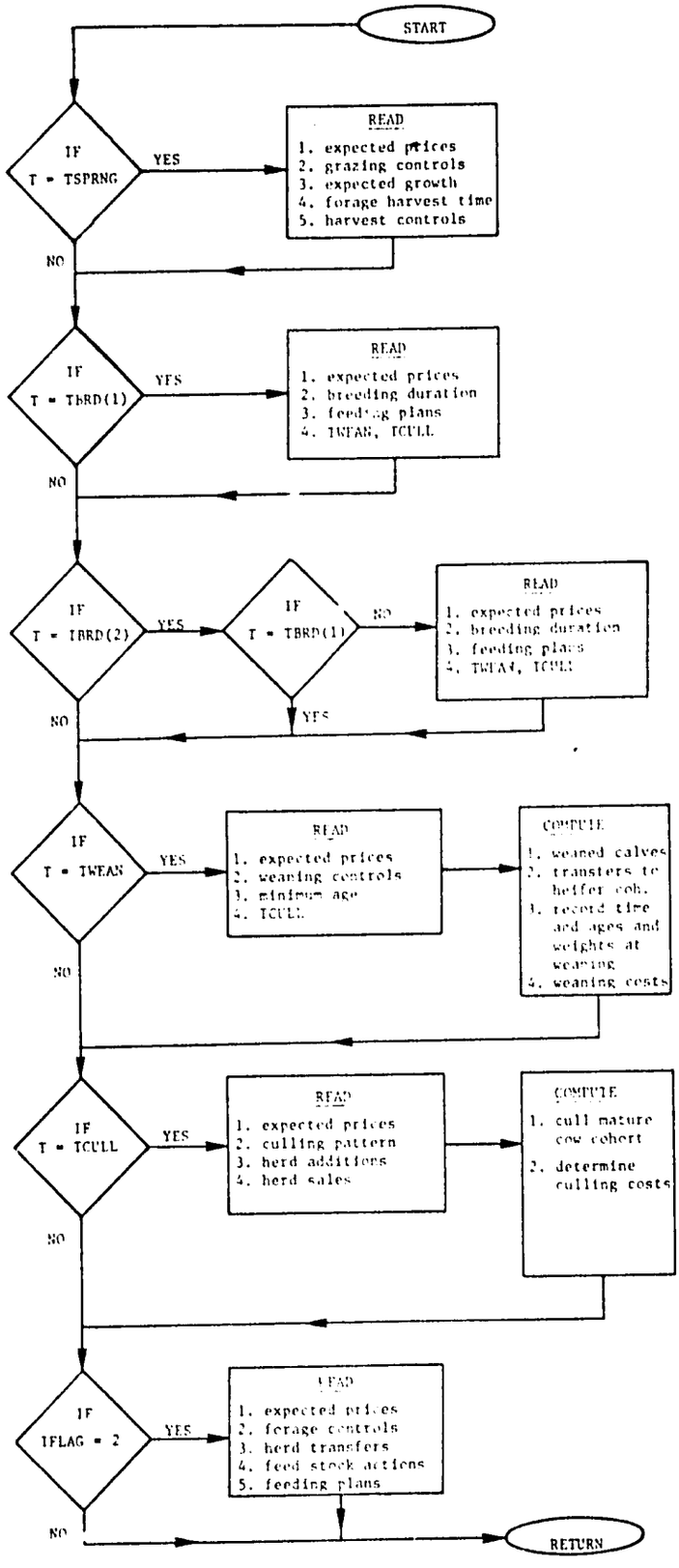


Figure 5. Flow chart of subroutine RESPNS of the management component

## CHAPTER TWO

## VARIABLE DEFINITIONS

This chapter will list and define all variables used in the beef cattle simulation model. Most variables and parameters are named as some mnemonic of the item they represent to assist in understanding of the programming. Most parameter values will not be given in this chapter but can be found in DATA statements or assignment statements within the program and its subroutines. Tables 2.1, 2.2, and 2.3 are included here to define individual elements of some variable arrays which encompass many different concepts. Table 3 also gives some base values for parameters associated with the production cost subroutine.

Table 2.1 Definition of Crop and Cattle Expense Variables

| VARIABLE | DEFINITION | UNITS |
|---|---|---|
| $ACOST_1(t)$ | Labor expenses | $/DT |
| $ACOST_2(t)$ | Repair expenses | $/DT |
| $ACOST_3(t)$ | Utility expenses | $/DT |
| $ACOST_4(t)$ | Veterinary and breeding expenses | $/DT |
| $ACOST_5(t)$ | Fertilizer and seed expenses | $/DT |
| $ACOST_6(t)$ | Leased land expenses | $/DT |
| $ACOST_7(t)$ | Animal feed expenses | $/DT |
| $ACOST_8(t)$ | Cattle purchased costs | $/DT |
| $ACOST_9(t)$ | Miscellaneous | $/DT |
| $CCOST_1(t)$ | Feed crop production expenses | $/DT |
| $CCOST_2(t)$ | Mechanical harvesting of forage expenses | $/DT |
| $CCOST_3(t)$ | Feed stock purchase expenses | $/DT |

Table 1 gives the breakdown of the variables ACOST and CCOST, which are categories of production expenses for cattle and feed stocks, respectively. These variables are used to report costs occurring within a single DT time increment. Table 2 gives a breakdown of the variable RESORC, which is used within subroutine PRCOST to determine expenses within each of the categories of ACOST and CCOST. Each of these eight production resources can be used in a number of different activities, so the sense of the programming in subroutine PRCOST should be that the variables of RESORC are used additively for many different activities and then valued to determine the expenses in categories of ACOST and CCOST.

Table 2.2 Definition of Resource Variables

| VARIABLE | DEFINITION |
|---|---|
| $RESORC_1(t)$ | Hours of labor |
| $RESORC_2(t)$ | Units of veterinary supplies |
| $RESORC_3(t)$ | Units of utilities |
| $RESORC_4(t)$ | Kgs of fertilizer |
| $RESORC_5(t)$ | Kgs of seed |
| $RESORC_6(t)$ | Hectares of land leased |
| $RESORC_7(t)$ | Units of breeding supplies |
| $RESORC_8(t)$ | Units of repair materials |

Table 2.3 Parameter Values and Definitions for Production Cost Element of the Financial Component

| Parameter | Value | Definition |
|---|---|---|
| OVHEAD | 5000. | annual overhead and miscellaneous costs--$ |
| DEFLAT | 0.91 | ratio of crop production costs to prices |
| SPBRED | 0.5 | units of breeding supplies per cow servicing |
| SPVACC | 1.0 | units of vaccination supplies per calf |
| HRCALV | 0.05 | hours of labor per calf born |
| HRFED1 | .00047 | hours of labor per kg. feed fed |
| HRBRED | .25 | hours of labor per cow servicing |
| HRVACC | 0.03 | hours of labor per calf vaccinated |
| HRWEAN | 1.75 | hours of labor per calf weaned |
| HRCULL | 0.2 | hours of labor per cow culled |
| NRCAST | 0.2 | hours of labor per male calf castrated |
| HRSEED | 0.04 | hours of labor per hectare of land seeded |
| HRFERT | 0.04 | hours of labor per hectare of land fertilizer |
| HRHARV | .0021 | hours of labor per kg. forage harvested |
| HREQIP | 0.03 | hours of labor for equipment repair per animal per month |
| HRFCAP | .00002 | hours of labor for repair per kg. feed stocks per month |
| HRMAIN | .00475 | hours of labor for repair per hectare of land per month |
| SPUTL1 | 2.5 | units of utilities per animal per month during wintering |
| SPUTL2 | .0001 | units of utilities per kg. feed stock per month during winter |
| SPUTL3 | 0. | units of utilities per animal per month during grazing |
| SPUTL4 | .00001 | units of utilities per kg. feed stock per month during grazing |
| SPUTL5 | 0.02 | units of utilities per kg. forage harvested |
| SPSEED | 10.0 | units of seeds used per hectare sown |
| SPFERT | 50.0 | units of fertilizer per hectare fertilized |
| SPREP1 | 0.10 | units of repair material per animal per month |
| SPREP2 | .000013 | units of repair material per kg. feed stock per month |
| SPREP3 | 0.01 | units of repair material per hectare of land per month |
| HLEASE | 0. | hectares of leased land per year |

## ALPHABETICAL VARIABLE LISTING

$ACDMIC_i(t)$ = quantity of concentrates consumed by cohort i in this year--kg

$ACDMIR_i(t)$ = quantity of roughages consumed by cohort i in this year--kg

$ACFEED_{ik}(t)$ = quantity of TDN allocated to a member of cohort i per day; k=1 denotes concentrates; k=2 denotes roughages--kg TDN/day

$ACOST_m(t)$ = the production cost in the current DT time increment for the $m^{th}$ cost subdivision--$/DT

$ACOSTD_m(t)$ = total production costs (discounted to Jan. 1) in the $m^{th}$ year of operation--$

$ACTED_{kn}(t)$ = quantity of feed stock n required for feeding in the current DT (k=2), or the winter season (k=1)--kg

$ACTIVE_n(t)$ = forage density photosynthetically active in the $n^{th}$ land parcel--kg/hectare

$ADDRT_i(t)$ = annual rate of addition of animals to herd cohort i --#/yr

ADGDAY(t) = total degree days above the 10°C threshold--°C days

$AFEST_{ij}(t)$ = age at first estrous of heifers in subpopulation j of cohort i--years

AGEMIN = the minimum age of calves weaned--years

$AHR_n(t)$ = rate of forage harvest by grazing in land parcel n--kg/day

$ALGD_i(t)$ = average price grade of cattle in cohort i currently

$ALLOC_i(t)$ = total quantity of feed allocated to individuals in cohort i per day--kg/day

$ALWT_i(t)$ = current average weight of cattle in cohort i--kg

$ANCOST_m(t)$ = total production costs in the $m^{th}$ year of operation--$

$ANREV_m(t)$ = total revenue in the $m^{th}$ year of operation--$

$APFUTR_{mk}(t)$ = current expectation of the value of the $k^{th}$ grade cattle price 2m DT's into the future--$/kg

$APPAST_{mk}(t)$ = value of the $k^{th}$ cattle grade price 2m DT's into the past--$/kg

$APRICE_k(t)$ = current market price of cattle of grade k--$/kg

$AREV_i(t)$ = revenue earned in the current time increment from sales of cattle from cohort i--$/DT

$AREVD_m(t)$ = total revenue (discounted to Jan. 1) in the $m^{th}$ year of operation--$

$ASALES_i(t)$ = the number of cattle sold in the current time increment from cohort i--#/DT

$ASELL_i(t)$ = the proportion of the current population of cohort i that is to be sold in this time increment

$ASOLD_i(t)$ = total number if animals sold in this year from cohort i

$ASTVAL_{ij}(t)$ = value of the cattle in the $j^{th}$ subpopulation of cohort i in the future--$/animal

$AVGGRD_i(t)$ = the average price grade of cattle sold in this time increment from cohort i

AVGTMP(t) = the average temperature in the current DT time increment--C°

$AVCW_i(t)$ = the average weight of cattle sold in this time increment from cohort i--kg

$AWF_n(t)$ = the animal harvest wastage factor in the current time increment for land parcel n

$BASEDG_n(t)$ = the basic digestibility factor in the current time increment for land parcel n

BEGCAV = the time in the year at which cows begin to calve

BEGPRT = time when printing of intermediate output is to start --years

$BFRAC_{il}$ = the $l^{th}$ point in the curve describing the accumulated calving pattern for cohort i (spaced 0.025 years apart)

$BPFUTR_{ml}(t)$ = the current expectation of the value of the $l^{th}$ production resource price 2m DT's into the future--$/unit

$BPPAST_{ml}(t)$ = value of the $l^{th}$ production resource price 2m DT's into the past--$/unit

$BPRICE_l(t)$ = the current market price for the $l^{th}$ resource of production--$/unit

$BR_i(t)$ = the current birth rate on an annual basis for the $i^{th}$ herd cohort--#/year

$CAPTL_m(t)$ = the current value of the $m^{th}$ financial variable;
m=1...outstanding long-term debt--$
m=2...monthly long-term debt payment--$
m=3...annual interest rate charged on long-term debt
m=4...depreciation charges taken in this time increment --$/DT
m=5...sum of payments of principal and interest on debt--$/DT
m=6...original capital investment for the project--$

$CASH_l(t)$ = current cash flow in this time increment--$/DT

CASSET(t) = current value of total net enterprise assets (excluding land value and debts)--$

$CATTIN_{ikl}(t)$ = the quantity of TDN allocated to members of herd cohort i per day from concentrates (k=1) or roughages (k=2) under feed plan l

$CCOST_l(t)$ = the crop production cost in the current time increment for the $l^{th}$ crop cost subdivision--$/DT

$CFEED_{nl}(t)$ = the quantity of feed stock n fed in this year--kg

CFINAL = the proportion of the existing forage in each land parcel that is to be harvested at the end of the growth season (TFALL)

$CLIMIT_n$ = the maximum fraction of feed allocation allowed to come from feed stock n

$CNAME_n$ = the name of the $n^{th}$ feed stock used

$CNCAL_i(t)$ = the quantity of concentrates allocated to cohort i for the current time increment--kg/DT

$CNCFRC_{in}(t)$ = the fraction of the concentrate TDN allocation to cohort i to be obtained from feed stock n

$CPAT_{ijk}$ = the fraction of the $j^{th}$ subpopulation of cohort i to have calved by $CTIM_{ijk}$

$CPFUTR_{mn}(t)$ = the current expectation of the value of the $n^{th}$ feed stock price 2m DT's into the future--$/kg

$CPPAST_{mn}(t)$ = value of the $n^{th}$ feed stock price 2m DT's into the past--$/kg

$CPRICE_n(t)$ = the current market price for the $m^{th}$ feed stock--$/kg

$CPURCH_n(t)$ = the quantity of feed stock n purchased in this year--kg

$CREV_n(t)$ = the revenue earned from sales of feed stock n in the current time increment--$/DT

$CROP_{n1}(t)$ = crop production in the current time increment for feed stock n--kg/DT

$CROPG_n(t)$ = annual crop production for feed stock n to time t--kg

$CRQUAL_{n1}(t)$ = the TDN value of crop production of feed stock n in the current time increment

$CSALES_n(t)$ = the quantity of feed stock n sold in the current time increment--kg/DT

$CSOLD_n(t)$ = the quantity of feed stock n sold in this year--kg

$CTIM_{ijk}$ = the time of year that calves will be born of female animals from subpopulation j of the $i^{th}$ cohort as a result of the $k^{th}$ servicing

$CULFRC_j(t)$ = the fraction of the $j^{th}$ subpopulation of the mature cow cohort that is to be culled at TCULL

C1 = fraction of calf births which are female

C2 = fraction of the output of the male calf cohort transferred to the young bull cohort

C3 = fraction of the output of the female calf cohort transferred to the slaughter heifer cohort

C4 = fraction of the output of the male calf cohort sold on the market as weaned calves

C5 = fraction of the output of the female calf cohort transferred to the replacement heifer cohort

C6 = fraction of the output of the young bull cohort sold on the market

C9 = fraction of the output of the female calf cohort sold on the market as weaned calves

C10 = fraction of the output of the replacement heifer cohort transferred to the mature cow cohort

C11 = fraction of the output of the bred heifer cohort sold on the market

DAYS = the number of days in the DT time increment

$DELAY_i(t)$ = current length of time required for the average member of cohort i to pass through the maturity interval modeled by that cohort--years

DETPRT = a flag denoting detailed print when its value is 1 and denoting selected print when its value is 0

$DFLATR_i(t)$ = the $i^{th}$ discount rate used to compute the discounted present values of financial variables at the end of the simulation run

$DGAIN_{ij}(t)$ = the rate of weight gain for the $j^{th}$ subpopulation of cohort i--kg/day

$DIGEST_n(t)$ = the TDN value of the forage in land parcel n at the current time

$DISTFD_{inl}(t)$ = the fraction of the cohort i allocation of concentrates (if n is a feed concentrate) or of roughages (if n is a feed roughage) to come from feed stock n under feed plan l

$DMI_{ij}(t)$ = the dry matter intake per day of a member of subpopulation j of cohort i--kg/day

$DMITDN_{ij}(t)$ = the average TDN value of the dry matter intake of members of the $j^{th}$ subpopulation of cohort i

$DR_i$ = the annual death rate for herd cohort i members--fraction/year

DT = the time increment used in the simulation--year

DUR = the time horizon over which the simulation is to be run--years

$DURB_i(t)$ = the duration of the breeding season for members of cohort i--years

$EFORG_{ij}(t)$ = quantity of energy available for weight gain after maintenance needs satisfied--mcal

$EGAIN_i(t)$ = energy value of the feed intake in terms of growth for cohort i--$\frac{\text{mcal gain energy}}{\text{kg feed}}$

$EMAIN_i(t)$ = energy value of the feed intake in terms of maintenance for cohort i--$\frac{\text{mcal maint. energy}}{\text{kg feed}}$

ENDCAV = the time at which the calving season is complete--year

ENGLSH = a scaling factor to allow printing of weight units in quantities other than kilograms; i.e., 2.20 would give pounds

EVAP = the equivalent height of water evaporated per day--cm/day

$F_n(t)$ = the rate of transfer of growth from roots to greenery in land parcel n--kg/hectare/day

FATFAC = parameter relating predicted daily gains for cattle at their cohort weight maximum into price grade increases

$FCOST_i(t)$ = the cost of retaining the population of cohort i for an additional time increment at the planned feeding schedule--$

$FDENSE_n(t)$ = forage digestibility factor based on forage density per animal in land parcel n

$FEDTDN_i(t)$ = the average TDN value of the roughage fed to cohort i from feed stock sources

$FEEDAL_i(t)$ = the quantity of roughage allocated to cohort i for the current increment of time--kg/DT

$FEST_{ij}(t)$ = time of first estrous for members of subpopulation j of heifer cohort i

$FLEVEL_n(t)$ = the minimum quantity of forage needed to sustain animals grazing in land parcel n per DT time increment --kg

$FORGAL_i(t)$ = the quantity of roughage allocated to cohort i as a result of grazing policy--kg/DT

$FORTDN_i(t)$ = the TDN value of the forage from roughage allocation to cohort i

$FPLANS_l(t)$ = the time at which the $l^{th}$ feed plan for the herd is completed--year

$FQUAL_n(t)$ = the current TDN value of the $n^{th}$ feed stock

$FQUAN_n(t)$ = the quantity of feed stock n in the current time increment which is carried over from the previous period's stocks--kg

$FRCLOS_n(t)$ = the annual loss rate of feed stock n--fraction/year

$FREV_i(t)$ = expected marginal revenue gained from retention of cohort i animals an additional DT time increment--$

FRQUAL(t) = forage digestibility factor relating current forage digestibility to time in the growth season

FSERCH = the number of DTS forward prices searched for maximum when cattle in slaughter cohorts are to be sold

$FSTOCK_n(t)$ = the current level of feed stock n supplies--kg

$FTOL_1$ = the absolute fractional deviation between current feed stock levels and seasonal requirements allowed

GAP = the length of time used to represent a point of crop production data or weather variable values--year

$GR_n(t)$ = the "pure" growth rate of forage greenery in land parcel n--kg/hec/day

$GRADE_{ij}(t)$ = the current price grade of cattle in the $j^{th}$ subpopulation of cohort i

$GRN_n(t)$ = the current quantity of forage existing within land parcel n--kg

$GRNDEN_n(t)$ = the quantity of forage greenery available per animal per day in land parcel n--kg/animal/day

$HP_{ijk}(t)$ = accumulated pregnancy rate for the $k^{th}$ breeding of members of the $j^{th}$ subpopulation of heifer cohort i

IFLAG = an indicator flag describing the existence of regular and special decision points

$INB_{ij}$ = the number of servicings during the breeding season for animals in the $j^{th}$ subpopulation of cohort i

INTCAV = the number of intervals of length one half month within the calving interval

IPRINT = a flag denoting desire for detailed financial printing and analysis; "1" obtains this, while "0" skips it

$KK_i$ = the number of subpopulations within cohort i

$LABELF_n$ = a flag denoting the classification of feed stock n as a concentrate ($LABELF_n = 1$) or as a roughage ($LABELF_n = 2$)

$LAND_n$ = the area of land parcel n--hectares

LIFE = the average depreciable life of the mix of depreciable assets owned--years

LVALUE = the purchase price in total of the depreciable assets owned--$

$MHR_n(t)$ = the rate of mechanical harvest of forage growth in land parcel n--kg/day

MODE = a flag denoting a program restart ("1") or an initial start ("0")

MWF = the wastage factor in mechanical harvest of forage

NCROPS = the number of feed stocks potentially used by the enterprise

NLANDS = the number of land parcels

NPOINT = the number of points of crop production and weather variable data used to span a year

NSTOCK = the number of feed stocks open to use by the enterprise

OASSET(t) = current value of total net enterprise assets (excluding land value and debts)--$

$OLDCP_{ik}(t)$ = overall calving rate of the $k^{th}$ subpopulation of cohort i which is pregnant

$OLDCRP_n(t)$ = the value of the feed stock n inventory the preceding January 1--$

$OLDVAL_i(t)$ = the value of the cattle on hand in cohort i the preceding January 1--$

$P_n(t)$ = the value of the variable $PHOTO_n(t)$ in land parcel n in the preceding DT increment--kg/hec/day

PADJST = a pregnancy adjustment factor to reflect management skill ($0.0 \leq PADJST \leq 1.0$)

$PCP_j(t)$ = overall pregnancy rate for mature cows of the $j^{th}$ subpopulation

$PDSTRB_{ni}(t)$ = the fraction of the population of cohort i grazing in land parcel n

PERC(t) = the equivalent height of water percolating down below effective root depth--cm/day

$PGRADE_i(t)$ = the average grade of animals purchased and added to cohort i

$PHOTO_n(t)$ = the net growth rate of forage in land parcel from photosynthetic energy conversion--kg/day

$PINDEX_n(t)$ = relative age of forage existing in land parcel n--days

PINTER(t) = payments of interest in the current time increment on long-term debt--$/DT

PMONTH(t) = payments on principal in this time increment for long-term debt--$/DT

$POP_i(t)$ = the current population of cohort i

$PRODUC_1(t)$ = expenses incurred by use of the production resources in this year--$

PROTAX = the current property tax rate on an annual basis--$/hectare/year

$PRQUAL_n(t)$ = the TDN value of feed stock n purchases

PRTCHG = a time value when the frequency of intermediate printing changes from PRTVL1 to PRTVL2--years

PRTVL1 = initial printing interval--years

PRTVL2 = secondary printing interval--years

$PRV_{mk}$ = the discounted present value of the annual values of gross profit (m=1), net profit(m=2), or cash flow (m=3),using discount rate k

RAIN(t) = the current rate of rainfall--cm/day

$REACTD_n(t)$ = the current intentions of feed stock n net purchases at the end of the growth season (TFALL)--kg

$READC1_{\ell n}$ = quantity of feed stock n harvested in the calendar year time interval [($\ell$-1)*GAP, $\ell$*GAP]--kg

$READC2_{\ell n}$ = quality of the quantity given by $READC1_{\ell n}$

$READC3_{\ell n}$ = quantity of feed stock n residue harvested in the calendar year time period [($\ell$-1)*GAP, $\ell$*GAP]--year

$READC4_{\ell n}$ = quality (TDN) of the quantity harvested in $READC3_{\ell n}$

$READIN_{\ell k}$ = value of weather variable k at calendar year time $\ell$*0.05: k=1...solar radiation--langley/day
k=2...average temperature--°C
k=3...rainfall--cm/day

REMOVL(t) = the current fraction of the existing forage in each land parcel to be harvested at each harvest time

$RESORC_l(t)$ = the quantity of production resource l used in the current time increment--units (see table for code)

RGRAZE(t) = the minimum quantity of forage required to maintain the cattle herd grazing in the current time increment --kg/DT

$RHGAL_i(t)$ = the overall roughage allocation to herd cohort i in this time increment--kg/DT

$RHGFRC_{in}(t)$ = the fraction of the roughage TDN allocation (from feed stocks) to cohort i to be obtained from feed stock n

$RIN_{ij}(t)$ = the intermediate output rate in the delay model of cohort i corresponding to subpopulation j

$ROOT_n(t)$ = the current root storage level in equivalent forage growth -- kg/hectare

$ROOTDT_n(t)$ = rate of increase of root storage in land parcel n --kg/hec/day

$ROUT_i(t)$ = the current output rate of animals from herd cohort i--#/year

$RPOP_i(t)$ = the population of cohort i which is reproductively characteristic of cohort i behavior

SDEBT(t) = the current level of short-term debt--$

SDEBTR(t) = the annual interest rate required for short-term debt

SINTER(t) = payments of interest made in the current time increment for short-term debt--$/DT

SLOAN(t) = current quantity of short-term debt acquired this time increment--$/DT

SM(t) = the current level of soil moisture within an effective root depth--cm

SMF(t) = the current value of the soil moisture quality index

SMONTH(t) = the current repayments of principal of short-term debt--$/DT

SNF(t) = the current value of the soil nutrients quality index

$SNUT_n(t)$ = the current level of soil nutrients in land parcel n--units

SOLAR(t) = the current average daytime rate of incoming solar radiation--langleys/day

SPLIT = the fraction of roughage consumption derived from feed stock roughages when an excess roughage allocation has been made

$SPOIL_n(t)$ = the annual rate of TDN decline in storage for feed stock n

SREPAY(t) = the current monthly payment to principal required for the outstanding short-term debt--$/month

$STKFED_n(t)$ = the quantity of feed stock n allocated to herd consumption in the current time increment--kg/DT

$STKPUR_n(t)$ = the current quantity of feed stock n purchased in this time increment--kg/DT

$STOCKL_n(t)$ = the stocking level of grazing cattle in land parcel n--#/hectare

$SUBPOP_{ij}(t)$ = the current number of animals in the $j^{th}$ subpopulation of cohort i

SUMTPF(t) = the current value of the integral of the temperature quality index (TPF)--units

$TACASH_m(t)$ = total annual cash flow of the $m^{th}$ year of operation--$

$TAGRP_m(t)$ = total gross profit of the $m^{th}$ year of operation--$

$TAGRPD_m(t)$ = total gross profit (discounted to Jan. 1) of the $m^{th}$ year of operation--$

$TANP_m(t)$ = total net profit of the $m^{th}$ year of operation--$

$TANPD_m(t)$ = total net profit (discounted to Jan. 1) of the $m^{th}$ year of operation--$

TAX(t) = the number of dollars in taxes paid in this time increment to all authorities--$/DT

$TAXES_m(t)$ = total taxes paid in the $m^{th}$ year of ration--$

$TAXESD_m(t)$ = total taxes paid (discounted to Jan. 1) in the $m^{th}$ year of operation--$

TAXINC(t) = taxable income in the current calendar year to date--$

TAXLIB(t) = income from the previous calendar year liable for income taxes currently--$

$TBRD_i(t)$ = the current value of the date on which breeding of cohort i is to commence--year

$TBRTH_{mk}(t)$ = date of birth for the $k^{th}$ subpopulation group which is nonzero for cohort 2 (m=1) or cohort 3 (m=2)--years

TCULL(t) = the current time at which culling of the mature cow cohort is to occur--year

$TDMIC_i(t)$ = the quantity of concentrates consumed by herd cohort i in the current time increment--kg/DT

$TDMIR_i(t)$ = the quantity of roughage consumed by herd cohort i in the current time increment--kg/DT

$TDNC_i(t)$ = the average TDN value of the concentrate allocation to herd cohort i

$TDNR_i(t)$ = the average TDN value of the roughage allocation to herd cohort i

$TEST_{ij}(t)$ = time at which estrous begins for females in the $j^{th}$ subpopulation of cohort i--years

TFALL = the time at which the growth season stops--year

$TFRAC_{mi}$ = the fraction of the weaned female calves transferred to cohort i, which are in the mth subpopulation older than the minimum age of calves weaned

TGREEN(t) = the total quantity of greenery available for grazing by cattle at time t--kg

$TMHR_l(t)$ = the time at which the $l^{th}$ mechanical harvest of forages is to occur--year

TPF(t) = the current value of the temperature quality index

TPGRP(t) = total dollars of gross profit earned in the current time period--$/DT

TPOINT = number of data points used to describe weather and crop production annual patterns (TPOINT*GAP = 1.0)

TRATE = the rate of taxation for businesses on taxable income

TSPRNG = the time at which the growth season is begun--year

TWEAN(t) = the time at which the calf cohorts are to be weaned--year

TWOLD(t) = date of the last calf weaning, using T = 0.0 as a reference--years

TYRLNG(t) = date at which replacement heifer group is approximately one year of age--years

VGREEN(t) = the average TDN value of the total forage currently available for grazing

$W_{ij}(t)$ = the average weight of members of the $j^{th}$ subpopulation of cohort i--kg

WCAPT(t) = the current level of working capital on hand--$

$WEANWT_{mk}(t)$ = weaning weight for the $k^{th}$ subpopulation group which is nonzero for cohort 2 (m=1) or cohort 3 (m=2)--kg

$WF_j$ = fraction of the population of subpopulation j of the mature cow cohort derived from the next youngest group (subpopulation j-1) in the previous breeding activity

$WFEST_{ij}(t)$ = weight at first estrous for members of subpopulation j of cohort i

$WGTMAX_i$ = the maximum weight that members of cohort i can achieve--kg

WLENGH = the length of the winter season--years

$XCPROD_n(t)$ = the expected production of feed stock n during the growth season--kg

$XCQUAL_n(t)$ = the expected TDN value of the production of feed stock n expected

$XPECTA_k(t)$ = the expected price of cattle of grade k at time t--$/kg

$XPECTB_l(t)$ = the expected price of the $l^{th}$ resource of production at time t--$/unit

$XPECTC_n(t)$ = the expected price for the $n^{th}$ feed stock at time t--$/kg

$ZX3_n(t)$ = the fraction of the photosynthetically converted energy growth rate used for root storage increases

# CHAPTER THREE

## USER INSTRUCTIONS

This chapter will present the basic instructions for use of the simulation model. Two topics will be discussed in some detail--computer system directives as needed on the MSU CDC 6500 hardware and the actual data input structure and formats required for model operation. Use of this model at installations other than Michigan State is easily accomplished, but their differences in system directives must be accommodated by the user.

Four files are used in the simulation model to read data and write output. The user must insure that he properly manipulates these files. File designations are:

(1) TAPE 1--input source for initialization and user data control cards
--usually batch card reader

(2) TAPE 2--output source for WRITE and PRINT statements
--usually the line printer

(3) TAPE 5--file created by subroutine INQUIR to preserve the current state and rate variable values at a decision point

(4) TAPE 6--file read by program MAIN to restart the simulation after the user has decided upon a central strategy.

The user must manipulate TAPE 5 and TAPE 6 through the use of system directives. TAPE 6 must be the local name of a permanent file which is composed of the restart values. It must be attached

under the name TAPE6 prior to model execution. The permanent file is the same one which was previously cataloged and thereby retained from the local file TAPE5 (created by the previous run of the model). Any files created by the model under the name TAPE5 must be cataloged after execution has stopped and before the set of system directives has been completed. If this is not done then the simulation model cannot be restarted. To repeat once again, the name TAPE6 is used to read from the permanent file created under the name TAPE5 in the previous model run.

The following system directives can be used to execute a simulation run on the MSU CDC 6500 system.

```
PNC
job card
HAL, BANNER, anameofoneschoice.
ATTACH, TAPE6, restartpermanentfilename.  ----- this card is not
ATTACH, LGO, BTHEMODELFILE.                       needed for an
LGO.                                              initial model
                                                  startup
CATALOG, TAPE5, restartpermanentfilename2.
7
8
9
     control card data
7
8
9
6
7
8
9
```

Although other installations will not have this same set of system directives, the basic steps for model execution will be the same everywhere. These are

(1) attach the file to read from restart information (if needed)

(2) load the binary program code

(3) execute

(4) catalog the restart file created (if needed).

Control values and initialization values are entered into the simulation model via the card reader. As in any model the user instructions must be carefully followed to obtain correct model results. Error messages will be given and execution stopped if an incorrect number of data cards is encountered. If the correct number of cards has been supplied and they are out of order, the model will give no error message unless format difficulties are encountered. To insure that proper data entry has been made, the model prints selected state variable and control variable values after data read statements have been completed. The user should always review these statements to verify that the proper values appear.

The basic means of identifying when the model is to be restarted from a restart file following a decision point or initially started is the variable MODE. It is the first data card read by the model and is the basis for branching to the different data read sections of the program. MODE is read from the second field in I2 format. A "0" indicates that the following control cards are for an initial program start, while a "1" indicates that a program restart from a decision point is to be made. The remaining discussion of this appendix will be segmental, in two parts: initial program start and program restarts.

Program Restarts

All program restarts share a common grouping of control cards in the beginning. The indicator of a program restart is the first of these. Next is the group of cards specifying the expectations of the user with respect to cattle, production resource, and crop prices.

These expectations and all remaining control cards are in 10F8.0 format--the user places the value and its decimal anywhere within the eight place field. The values for APFUTR(I,J)--the future expectations of cattle prices for five grades up through 40DT time increments spaced each 2nd DT increment--are read in 5 values per card for 20 cards. This requirement is indicated in the decision point printout by APFUTR(5,20). A sample of the cards required might be:

```
bbbb1.00bbbb0.82bbbb0.64bbbb0.59bbbb0.44  : card 1
bbbb1.00bbbb0.83bbbb0.65bbbb0.59bbbb0.45  : card 2
bbbb0.98bbbb0.82bbbb0.64bbbb0.60bbbb0.44  : card 3
                                            .
                                            .
                                            .
bbbb1.00bbbb0.82bbbb0.64bbbb0.59bbbb0.44  : card 20
```

Similarily, 80 entries are required for BPFUTR(8,10)--eight entries per card for 10 cards. CPFUTR(NSTOCK,10) is again similar except that NSTOCK is a variable; if it is greater than 10 then more than one card is needed for each of the 10 time points specifying the pattern of expected feed stock prices into the future. A total of NSTOCK*10 entries is required using 10 cards if NSTOCK $\leq$ 10, or 20 cards if NSTOCK> 10. All variables which have been dimensioned to NSTOCK share this complication about the overflow of card entries if NSTOCK is greater than 10.

The remaining complication which exists to violate the above rule concerning control card data entry concerns the feed plans used. When a feed plan is required as data for a model restart the following set of three lines is printed in the final message for the decision point.

FPLANS(4)
CATTIN(9,2,4)
DISTFD(9,NSTOCK,4)

Instead of reading four values of FPLANS(4), then 72 values for CATTIN(9,2,4), and then 36*NSTOCK values for DISTFD(9,NSTOCK,4), a different requirement exists. First, the four values for FPLANS(4) are read in on a single data card. Second, for the first feed plan one reads two cards of nine entries each for CATTIN, and then one reads NSTOCK cards of nine entries each for DISTFD. Third, the values for CATTIN and DISTFD are read for the second feed plan, etc. Thus the values for CATTIN and DISTFD are mixed together and the values which pertain to each feeding plan are read in together as a group. The separate read-in of all CATTIN and then all DISTFD variables implied by the printed message is misleading.

A sample of the input cards for restarting the model at the spring growth decision point is given in Figure 6. The message printed at the discovery of the decision point is given below; notice the correspondence between the the variables in the following list and the data entries in Figure 6.

APFUTR(5,20)
BPFUTR(8,10)
CPFUTR(NSTOCK,10)
PDSTRB(9,NLANDS)
CSALES(NSTOCK)
XCPROD(NSTOCK)
XCQUAL(NSTOCK)
CFINAL REMOVL
TBRD(1), TBRD(2), TWEAN, TCULL
TMHR(5)

```
1 ———— simulation restart indicator
   0.91     0.51     0.51     0.51     0.35
   0.92     0.52     0.52     0.52     0.37
   0.97     0.55     0.58     0.59     0.40
   1.03     0.62     0.65     0.67     0.46
   1.09     0.58     0.53     0.61     0.44
   1.09     0.58     0.53     0.61     0.44
   1.09     0.58     0.53     0.61     0.44
   0.95     0.55     0.51     0.59     0.43
   0.95     0.55     0.53     0.55     0.40
   0.90     0.50     0.50     0.50     0.35
   0.91     0.51     0.51     0.51     0.35
   0.92     0.52     0.52     0.52     0.37
   0.97     0.55     0.58     0.59     0.40
   1.03     0.62     0.65     0.67     0.46
   1.09     0.58     0.53     0.61     0.44
   1.09     0.58     0.53     0.61     0.44
   1.09     0.58     0.53     0.61     0.44
   0.95     0.55     0.51     0.59     0.43
   0.95     0.55     0.53     0.55     0.40
   0.90     0.50     0.50     0.50     0.35
   2.00     1.29     0.45     0.05     0.55     50.     10.0     0.50
   2.00     1.29     0.45     0.05     0.55     50.     10.0     0.50
   2.00     1.29     0.45     0.05     0.55     50.     10.0     0.50
   2.00     1.29     0.45     0.05     0.55     50.     10.0     0.50
   2.00     1.29     0.45     0.05     0.55     50.     10.0     0.50
   2.00     1.29     0.45     0.05     0.55     50.     10.0     0.50
   2.00     1.29     0.45     0.05     0.55     50.     10.0     0.50
   2.00     1.29     0.45     0.05     0.55     50.     10.0     0.50
   2.00     1.29     0.45     0.05     0.55     50.     10.0     0.50
   .047     .110     .143     .028     .029     .079
   .047     .110     .143     .028     .029     .079
   .050     .120     .154     .030     .031     .074
   .050     .120     .154     .030     .031     .079
   .055     .135     .175     .040     .034     .082
   .055     .135     .175     .040     .034     .082
   .050     .120     .154     .030     .031     .079
   .050     .120     .154     .030     .031     .079
   .050     .120     .154     .030     .031     .079
   0.34      0.       0.       0.       0.       0.      0.34     0.34      0.
   0.34      0.       0.       0.       0.       0.      0.34     0.34      0.
   0.17      0.       0.       0.       0.       0.      0.17     0.17      0.
     0.     1.00     1.00     1.00      0.       0.       0.       0.       0.
  0.138      0.       0.       0.       0.       0.     0.138    0.138      1.
     0.      0.       0.       0.       0.       0.
2550000.  450000.      0.   15000.   20000.      0.
   0.45     0.35      0.      0.43     0.53      0.
   0.50     0.75
   0.45     0.45     0.55     0.85
   0.55     0.99     0.99     0.99     0.99
```

APFUTR

BPFUTR

CPFUTR

PDSTRB

CSALES

XCPROD

XCQUAL

CFINAL REMOVL

TBRD(1),TBRD(2),TWEAN,TCULL

TMHR

Figure 6. Sample input cards to restart the simulation model from the spring growth decision point

The decision point structure of the interactive model is based on recognition of specific times or state variable values. It is quite possible for more than one decision point to be encountered at a single simulation time increment. For example, if weaning time and culling time were identical, then the model would recognize that a decision point existed for each of these activities. When the model is restarted, the user must supply all of the control cards requested for the weaning decision point and all of the cards requested for the culling decision point. This means that a good proportion of the control card values are identical in the two sets supplied. The only exception to this rule is that the initial control card designating a restart or an initial start is only given once, no matter how many decision point control card sets are read in. Figures 4 and 5 give the structure of the computer subroutines which recognize decision points and read in the control values supplied by the user.

Initial Program Starts

Program starts involve much more data than do restarts. Furthermore, the program is written so that a key distinction is made concerning the time at which the program is to begin its simulation. The model uses T=0.0 as January 1, with the result that the interval [0.0,1.0] represents one year's time. If the user wishes to start the model at a time not equal to January 1, he must initialize a greater number of variables, especially financial accounting ones. If the user wishes to start the model with TSPRNG $\leq$ T $\leq$ TFALL, he must initialize even more variables concerning the forage growth component. The remainder of this discussion will be organized into data requirements for specific values of the initial time; i.e., T=0.0, T=0.25, etc.

1. Model starts with T = 0.0

Table 3.1 Initialization Requirements

| No. of Cards | Variable | Format |
|---|---|---|
| 1 | MODE | I2 |
| 1 | DUR, DT, DETPRT, PRTCHG, PRTVL1, PRTVL2, BEGPRT, ENGLSH, IPRINT | 8F8.0,I2 |
| 1 | T | F8.0 |
| 1 | TBRD(1), TBRD(2), TSPRNG, TFALL, TWEAN, TCULL, WLENGH | 7F8.0 |
| 1 | DURB(1), DURB(2), DURB(3) | 3F8.0 |
| 1 | C1, C2, C3, C4, C5, C6, C9, C10, C11 | 9F8.0 |
| 1 | [KK(I), I=1,9] | 9I3 |
| 1 | [DELAY(I), I=1,9] | 9F8.0 |
| 1 | [DR(I), I=1,9] | 9F8.0 |
| 17-19 | [(SUBPOP(I,J), J=1,KK(I)), I=1,9] | 10F8.0 |
| 17-19 | [(W(I,J), J=1, KK(I)), I=1,9] | 10F8.0 |
| 17-19 | [(DGAIN(I,J), J=1,KK(I)), I=1,9] | 10F8.0 |
| 1 | [WGTMAX(I), J=1,9] | 9F8.0 |
| 9 | [(GRADE(I,J), J=1, KK(I)), I=1,9] | 40I2 |
| 1 | [FEEDAL(I), I=1,9] | 9F8.0 |
| 1 | [CNCAL(I), I=1,9] | 9F8.0 |
| 1 | WCAPT, FSERCH, PADJST | 2F8.0 |
| 1 | CAPTL(1), CAPTL(2), CAPTL(3), CAPTL(6), LVALUE, LIFE | 6F8.0 |
| 1 | SDEBT, SDEBTR, SREPAY, SLOAN, PROTAX, TAXINC, TAXLIB | 7F8.0 |

Table 3.1 (cont'd)

| No. of Cards | Variable | Format |
|---|---|---|
| 1 | OVHEAD, DEFLAT, SPBRED, SPVACC, HRCALV, HRFED1, HRFED2, HRBRED, HRVACC, HRWEAN | 10F8.0 |
| 1 | HRCULL, HRCAST, HRSEED, HRFERT, HRHARV, HREQIP, HRFCAP, HRMAIN, SPUTL1, SPUTL2 | 10F8.0 |
| 1 | SPUTL3, SPUTL4, SPUTL5, SPSEED, SPFERT, SPREP1, SPREP2, SPREP3, HLEASE | 9F8.0 |
| 1 | NPOINT, GAP | I4,F8.0 |
| 20 | [(APFUTR(K,L), K=1,5), L=1,20] | 5F8.0 |
| 5 | [(APPAST(K,L), K=1,5), L=1,5] | 5F8.0 |
| 10 | [(BPFUTR(K,L), K=1,8), L=1,10] | 8F8.0 |
| 5 | [(BPPAST(K,L), K=1,8), L=1,5] | 8F8.0 |
| 20 | [(CPFUTR(K,L), K=1,20), L=1,10] | 10F8.0 |
| 10 | [(CPPAST(K,L), K=1,20), L=1,5] | 10F8.0 |
| 1 | [OLDVAL(I), I=1,9] | 9F8.0 |
| 1 | [OLDCRP(N), N=1,20] | 10F8.0 |
| 17-19 | [(ASTVAL(I,J), J=1, KK(I)), I=1,9] | 10F8.0 |
| 1 | NSTOCK, NLANDS, SPLIT | 2I3,F8.0 |
| NSTOCK | [CNAME(N,1), CNAME(N, 2), N=1, NSTOCK] | 2A8 |
| NSTOCK | [(FSTOCK(N), FQUAL(N), SPOIL(N), FRCLOS(N), CSALES(N), STKPUR(N), XCPROD(N), XCQUAL(N), PRQUAL(N), STKFED(N)), N=1,NSTOCK] | 10F8.0 |
| 4(NPOINT) or 8(NPOINT) | [(READC1(L, N), N=1,NSTOCK), (READC2(L,N), N=1,NSTOCK), (READC3(L,N), N=1,NSTOCK), (READC4(L,N), N=1,NSTOCK), L=1,NPOINT] | 10F8.0 |
| 1 | [LAND(N), N=1,NLANDS] | 5F8.0 |
| NPOINT | [(READIN(I,K), K=1,3), I=1,NPOINT] | 3F10.0 |
| 1 or 2 | [CLIMIT(N), N=1,NSTOCK] | 10F8.0 |
| 1 | [LABELF(N), N=1,NSTOCK] | 40I2 |

Table 3.1 (cont'd)

| No. of Cards | Variable | Format |
|---|---|---|
| 1 | OVHEAD, DEFLAT, SPBRED, SPVACC, HRCALV, HRFED1, HRFED2, HRBRED, HRVACC, HRWEAN | 10F8.0 |
| 1 | HRCULL, HRCAST, HRSEED, HRFERT, HRHARV, HREQIP, HRFCAP, HRMAIN, SPUTL1, SPUTL2 | 10F8.0 |
| 1 | SPUTL3, SPUTL4, SPUTL5, SPSEED, SPFERT, SPREP1, SPREP2, SPREP3, HLEASE | 9F8.0 |
| 1 | NPOINT, GAP | I4,F8.0 |
| 20 | [(APFUTR(K,L), K=1,5), L=1,20] | 5F8.0 |
| 5 | [(APPAST(K,L), K=1,5), L=1,5] | 5F8.0 |
| 10 | [(BPFUTR(K,L), K=1,8), L=1,10] | 8F8.0 |
| 5 | [(BPPAST(K,L), K=1,8), L=1,5] | 8F8.0 |
| 20 | [(CPFUTR(K,L), K=1,20), L=1,10] | 10F8.0 |
| 10 | [(CPPAST(K,L), K=1,20), L=1,5] | 10F8.0 |
| 1 | [OLDVAL(I), I=1,9] | 9F8.0 |
| 1 | [OLDCRP(N), N=1,20] | 10F8.0 |
| 17-19 | [(ASTVAL(I,J), J=1, KK(I)), I=1,9] | 10F8.0 |
| 1 | NSTOCK, NLANDS, SPLIT | 2I3,F8.0 |
| NSTOCK | [(FSTOCK(N), FQUAL(N), SPOIL(N), FRCLOS(N), CSALES(N), STKPUR(N), XCPROD(N), XCQUAL(N), PRQUAL(N), STKFED(N)), N= 1, NSTOCK] | 10F8.0 |
| 80 or 160 | [(READC1(L,N), N=1, NSTOCK), (READC2(L,N), N=1, NSTOCK), (READC3(L,N),N=1,NSTOCK), (READC4(L,N),N=1,NSTOCK), L=1,20] | 10F8.0 |
| 1 | [LAND(N), N=1,NLANDS] | 5F8.0 |
| 20 | [(READIN(I,K), K=1,3), I=1,20] | 3F10.0 |
| 1 or 2 | [CLIMIT(N), N=1,NSTOCK] | 10F8.0 |
| 1 | [LABELF(N), N=1,NSTOCK] | 40I2 |

Table 3.1 (cont'd)

| No. of Cards | Variable | Format |
|---|---|---|
| 1 | [FPLANS(L), L=1,4] | 4F8.0 |
| 2 | [(CATTIN(I,K,1), I=1,9), K=1,2] | 9F8.0 |
| NSTOCK | [(DISTFD(I,N,1), I=1,9), N=1,NSTOCK] | 9F8.0 |
| 2 | [(CATTIN(J,K,2), I=1,9), K=1,2] | 9F8.0 |
| NSTOCK | [(DISTFD(J,N,2), J=1,9), N=1,NSTOCK] | 9F8.0 |
| 2 | [(CATTIN(J,K,3), J=1,9), K=1,2] | 9F8.0 |
| NSTOCK | [(DISTED(I,N,3), J=1,9), N=1,NSTOCK] | 9F8.0 |
| 2 | [(CATTIN(J,K,4), I=1,9), K=1,2] | 9F8.0 |
| NSTOCK | [(DISTFD(I,N,4), J=1,9), N=1,NSTOCK] | 9F8.0 |
| 1 | BEGCAV, ENDCAV | 2F8.0 |
| 1 | TWOLD, TYRLNG | 2F8.0 |
| 30 | [INB(1,J), (CTIM(1,J,K), K=1,INB(1,J), (CPAT(1,J,K), K=1,INB(1,J), J=1,KK(1)] | I2/8F8.0/ 8F8.0 |
| a | [TBRTH(2,J),WEANWT(2,J), J=1,16] | 2F8.0 |
| b | [INB(2,J), (CTIM(2,J,K), K=1,INB(2,J), (CPAT(2,J,K), K=1,INB(2,J), J=16,KK(2)] | I2/8F8.0/ 8F8.0 |
| c | [TBRTH(3,J), WEANWT(3,J), J=1,16] | 2F8.0 |
| d | [INB(3,J), (CTIM(3,J,K), K=1,INB(3,J), (CPAT(3,J,K), K=1,INB(3,J), J=16,KK(3)] | I2/8F8.0/ 8F8.0 |
| 1 | [WF(J), J=1,KK(1)] | 10F8.0 |

a. number of cards read corresponds to the number of nonzero subpopulations of cohort 2 in the range of J=1,16

b. number of cards read corresponds to the number of nonzero subpopulations of cohort 2 in the range of J=17,KK(2)

c. number of cards read corresponds to the number of nonzero subpopulations of cohort 3 in the range of J=1,16

d. number of cards read corresponds to the number of non-zero subpopulations of cohort 3 in the range of J=17,KK(3).

2. All Model Starts with T≠0.0

The cards of Table 3.2 are added on after those of Table 3.1, or those of 3.3, if they were needed for model initialization. The additional data cards following these instructions initialize financial variables which are automatically set to zero if T=0.0.

Table 3.2 Supplementary Initialization Requirements

| No. of Cards | Variable | Format |
|---|---|---|
| 1 | [ADDRT(I), I=1,9] | 9F8.0 |
| 1 | [ASOLD(I), I=1,9] | 9F8.0 |
| 1 | [ACDMIC(I), I=1,9] | 9F8.0 |
| 1 | [ACDMIR(I), I=1,9] | 9F8.0 |
| 1 or 2 | [CSOLD(N), N=1,NSTOCK] | 10F8.0 |
| 1 or 2 | [CROPG(N), N=1,NSTOCK] | 10F8.0 |
| 1 or 2 | [CPURCH(N), N=1,NSTOCK] | 10F8.0 |
| 1 or 2 | [CFEED(N,1), N=1,NSTOCK] | 10F8.0 |
| 1 | [PRODUC(L), L=1,9] | 9F8.0 |
| 1 | [ACOSTD(K), K=1,5] | 5F8.0 |
| 1 | [AREVD(K), K=1,5] | 5F8.0 |
| 1 | [ANCOST(K), K=1,5] | 5F8.0 |
| 1 | [ANREV(K), K=1,5] | 5F8.0 |
| 1 | [TACASH(K), K=1,5] | 5F8.0 |
| 1 | [TACSHD(K), K=1,5] | 5F8.0 |
| 1 | [TAXES(K), K=1,5] | 5F8.0 |
| 1 | [TAXESD(K), K=1,5] | 5F8.0 |
| 1 | [TAGRP(K), K=1,5] | 5F8.0 |
| 1 | [TAGRPD(R), R=1,5] | 5F8.0 |

Table 3.2 (cont'd)

| No. of Cards | Variable | Format |
|---|---|---|
| 1 | [TANP(K), K=1,5] | 5F8.0 |
| 1 | [TANPD(K), K=1,5] | 5F8.0 |
| 3 | [CASH(L), L=1,26] | 10F8.0 |

3. Model Starts with TSPRNG $\leq$ T $\leq$ TFALL

Model startups with values of T in the indicated range begin with the entire initialization instructions given in Table 3.1 and are augmented by additional data cards as given in Tables 3.2, 3.3, and perhaps 3.4. The values in Table 3.3 are added after the cards of Table 3.1.

Table 3.3 Additional Initialization Requirements

| No. of Cards | Variables | Format |
|---|---|---|
| 1 | [TMHR(N), N=1,5] | 5F8.0 |
| 1 | CFINAL, REMOVL | 2F8.0 |
| 1 | [MHR(N), N=1, NLANDS] | 5F15.0 |
| 1 | [GRN(N), N=1,NLANDS] | 5F15.0 |
| 1 | [GR(N), N=1,NLANDS] | 5F15.0 |
| 1 | [DIGEST(N), N=1,NLANDS] | 5F15.0 |
| 1 | [SNUT(N), N=1,NLANDS] | 5F15.0 |
| 1 | [AHR(N), N=1,NLANDS] | 5F15.0 |
| NLANDS | [(PDSTRB(N,I), I=1,9), N=1,NLANDS] | 9F8.0 |
| 1 | [P(N), N=1,NLANDS] | 5F15.0 |

Table 3.3 (cont'd)

| No. of Cards | Variables | Format |
|---|---|---|
| 1 | [ROOT(N), N=1,NLANDS] | 5F15.0 |
| 1 | [ROOTDT(N), N=1,NLANDS] | 5F15.0 |
| 1 | SUMTPF, ADGDAY, SM | 3F15.0 |

4. Model Starts with BEGCAV - DT $\leq$ T $\leq$ ENDCAV

When model starts begin with T in this interval, the patterns of calving over time must be specified, since births will be occurring. Table 3.4 indicates the required data card formats. These are added after the cards required in Table 3.2.

Table 3.4 Additional Initialization Requirements

| No. of Cards | Variable | Format |
|---|---|---|
| A[a] | [BFRAC(1,L), L=1,B[b]] | 5F15.0 |
| A[a] | [BFRAC(2,L), L=1,B[b]] | 5F15.0 |
| A[a] | [BFRAC(3,L), L=1,B[b]] | 5F15.0 |

a. the number of data cards required must be computed from the value of B as follows:

A = integer of (B/5 + 1)

b. the number of data values required must be computed as follows:

B = integer of [2(ENDCAV - BEGCAV)/DT + 0.5]

## Chapter Four

## Program and Subroutine Listings

This chapter will include the actual listing of the program and its subroutines as of 1 May 1976. This is the version which has been developed, tested, used, and reported in Jaske [1]. The individual listings have been alphabetized for easy reference. Caution should be exercised by those desiring to use the entire model or parts of it at locations other than Michigan State. All programs and subroutines included here are written for the CDC FTN4 compiler in use at Michigan State. Those attempting to use these routines at locations other than Michigan State or with compilers different from the CDC FTN4, should check local consultants for incompatibilities which must be resolved. The MSU version is available through CLASS.

```
      PROGRAM MAIN(INPUT,OUTPUT,TAPE1=INPUT,TAPE2=OUTPUT,TAPE5,TAPE6)
C
C     THIS PROGRAM CAN BE STARTED IN TWO DIFFERENT WAYS, AN INITIAL
C     START AT T=0, OR A RESTART FROM AN INTERMEDIATE TIME WHERE
C     THE SIMULATION HAS STOPPED TO ALLOW FOR EXOGENOUS CONTROL
C     VARIABLES TO BE ENTERED.
C
C             MODE = 0 .... AN INITIAL START
C             MODE = 1 .... A RESTART
C
      COMMON/BLOCK/DETPRT,SELPRT,BEGPRT,PRTCHG,PRTVL1,PRTVL2,DUR,
     1             PLR(9),DR(9),PGRADE(9),TSPRNG,TFALL,WLENGH
      COMMON/SYSVAR/T,DT,KK(9),KNOWS(9),SUBPOP(9,40),POP(9),ROUT(9),
     1              DELAY(9),DELAYF(9)
      COMMON/PRICES/APRICE(9),BPRICE(9),CPRICE(20)
      COMMON/EXPECT/APFUTR(5,20),APPAST(5,5),CPFUTR(20,10),CPPAST(20,5)
     1              ,BPFUTR(3,10),BPPAST(3,5)
      COMMON/ASSETS/CURVAL(10),ASTVAL(6,5),OLDVAL(10),ASTINC(10),
     1              VALCRP(20),OLDCRP(20),DSPINC(21)
      COMMON/FIELD/NSTOCK,RSTOCK(20),STKFED(20),STKPUR(20),PRQUAL(20),
     1             SPOIL(20),STKLOS(20),FQUAL(20),FRCLOS(20),CPURCH(20),
     2             CROP(20,2),CROPG(20),CFEED(20,2),CROPOL(20,2)
      COMMON/CNTROL/POSTRB(5,9),CNCAL(9),FEEDAL(9),RHGAL(9),CULFRC(10),
     1              TOMR(9),TONC(9),TOMIP(9),TOMIC(9),AHP(5),MHR(5),
     2              OLDMHR(5),RHGFRC(9,20),DMCFRC(9,20),ACFEED(9,2),
     3              SPLIT,DUR3(3),TUD(3),FFRAC(10,2),ASELL(9),ADDRT(9),
     4              C1,C2,C3,C4,C5,C6,C7,C8,C9,C10,C11,TWFAN,TCULL
      COMMON/SOURCE/READIN(20,3),READC1(20,10),READC2(20,10),
     2              NPOINT,GAP,READC3(20,10),READC4(20,10)
      COMMON/MONEY/ASALES(10),CSALES(20),AREV(10),CREV(21),CASH(26),
     1             TAXP(15),TAMP(15),TAXES(15),TACRPD(15),TANPD(15),
     2             TAXESD(15),NACOST,NCCOST,CAPTL(5),TACASH(15),
     3             LVALUE,LIFE,ANREV(15),AREVD(15),ANCOST(15),
     4             ACOST(21),ACOSTD(15),CCOST(21),TACSHD(15),
     5             ASOLD(10),CSOLD(20),SALES,DEBTD
      COMMON/HRDVAL/W(9,40),GRADE(9,40),MGTMAX(9),RIN(9,40),FATFAC,
     1              FMATUR(11),DGAIN(9,20),PAMATE(9),TWOLD,TYRLNG
      COMMON/ENERGY/TOMM,YMILK(7),SMM,DIFM,KM,TOVAN,CFE,CFD,ACDMIR(9),
     1              ACDMIC(9),RTON(9),CTON(9),WSM,NDIF,KW,WEANWT(2,16),
     2              RDI(3)
      COMMON/WEATHR/SOLAR,AVGTMP,RAIN
      COMMON/REPROD/TBRTH(2,16),DEST,GEST,TEST(3,40),BEGCAV,ENDCAV,
     1              INTCAV,D1,TERC,CONCP(5),POPT(11),CPAT(3,4),13),
     2              CTIM(3,4),13),CFC,INB(3,40),NR(3),IPREG,LAC,
     3              PCD(10,14),PCP(11),WF(11),ICCUNT(2,16),CSM,CDIF,
     4              KD,GGEST,PHD(2,16,13),HP(2,16,13),PT(2,16,13),ML,
     5              MAXHE(2),HFOUT,AFEST(3,40),WFEST(3,40),FFST(2,16),
     6              CONNEW(2,16),KCNT(2),SCNEW(2),OLDCP(3,13),MOMX
      COMMON/MATERL/RESORC(10),NRSORC,DVHEAD,DEFLAT,SPDFED,SPVACC,
     1              HRCALV,HRFED1,HRFED2,HRBFED,HRVACC,HRWEAN,HRCULL,
     2              HRCAST,HRSEED,HRFERT,HRMARV,HREDIP,HRFCAP,HRMAIN,
     3              SPUTL1,SPUTL2,SPUTL3,SPUTL4,SPUTL5,SPSEED,SPFERT,
     4              SPREP1,SPREP2,SPREP3,HLEASE
      COMMON/EARTH/ DIGEST(5),GRN(5),LAND(5),NLANDS,SNZERO,SMZERO,
     1             STOCKL(5),ACRSOD(5)
      COMMON/FRDATA/DTEMP,MAF,DDGEST(10),MSTOCK(6),QUALTY(11),TEMP(10),
     1              SMATER(11),WASTEF(5),SOILNT(11)
      COMMON/PRINTS/PRV(3,15),NAME(6,2),COHORT(9,2),DISC(9),CNAME(20,2),
     1              TAMREV,TORREV,DCOUNT,DASSET
      COMMON/DIRECT/CFINAL,REMOVL,FRCDUG(5),CATTIN(9,2,4),NALTER,
     1              AGEHIN,THR(5),FPACT(20),FPLANS(4),DISTFD(9,20,4)
      COMMON/SAVER1/GROWTH(5,2,10),ACTED(5,20),XCPROD(20),XCQUAL(20),
     1              ITER,NCROPS,IPRINT,ENGLSH,DAYS,NITER,PRTIME,PRTVL,
     2              ISTART,IFLAG,LABELP(20),DDFEED(10),DDFTON(9),
     3              CLIMIT(20),FSEPCH,PADJST
      COMMON/SAVER2/TAXINC,TAXLID,TSPACE(20),NSTRT1,NSTRT2,NSTRT3,NSTRT4
     1              ,DENOM,TAGNOT,TAFEED,WCART,NSTRT5,NSTRT6
      COMMON/SAVER3/ROOT(5),SUMTPF,ACCDAY,SM,SNUT(5),GR(5),ROOTDT(5),
     1              P(5)
      COMMON/SAVER4/D,DFRAC(3,30),DR(3),PPOP(3)
      COMMON/SAVER5/SDEBT,SDEBTR,SREPAY,BLOAN,PROTAX,SDEBTC,PRODUC(9)
      DIMENSION ARAY01( 37 ),ARAY02( 416 ),ARAY03( 545 ),ARAY04( 361 )
      DIMENSION ARAY05( 321 ),ARAY06( 960 ),ARAY07( 862 ),ARAY08( 351 )
      DIMENSION ARAY09( 1472),ARAY10( 98 ),ARAY11( 3 ),ARAY12( 5219)
      DIMENSION ARAY13( 4 ),ARAY14( 28 ),ARAY15( 38 ),ARAY16( 128 )
      DIMENSION ARAY17( 66 ),ARAY18( 311 ),ARAY19( 32 ),ARAY20( 28 )
      DIMENSION ARAY21( 832 )
      DIMENSION ARAY22( 97 )
      DIMENSION ARAY23(15)
      EQUIVALENCE(ARAY01(1),DETPRT)
      EQUIVALENCE(ARAY02(1),T)
```

```
      EQUIVALENCE(ARAY03(1),APFUTR(1,1))
      EQUIVALENCE(ARAY04(1),SURVAL(1))
      EQUIVALENCE(ARAY05(1),NSTOCK)
      EQUIVALENCE(ARAY06(1),POSTRB(1,1))
      EQUIVALENCE(ARAY07(1),READIN(1,1))
      EQUIVALENCE(ARAY08(1),ASALES(1))
      EQUIVALENCE(ARAY09(1),Y(1,1))
      EQUIVALENCE(ARAY10(1),TONM)
      EQUIVALENCE(ARAY11(1),  SOLAR)
      EQUIVALENCE(ARAY12(1),TRETH(1,1))
      EQUIVALENCE(ARAY13(1),PECOUR(1))
      EQUIVALENCE(ARAY14(1),DIGEST(1))
      EQUIVALENCE(ARAY15(1),PRICE(1))
      EQUIVALENCE(ARAY16(1),PRV(1,1))
      EQUIVALENCE(ARAY17(1),DTEMP)
      EQUIVALENCE(ARAY18(1),GROWTH(1,1,1))
      EQUIVALENCE(ARAY19(1),TAXINC)
      EQUIVALENCE(ARAY20(1),ROOT(1))
      EQUIVALENCE(ARAY21(1),DFINAL)
      EQUIVALENCE(ARAY22(1),J)
      EQUIVALENCE(ARAY23(1),SDEBT)
      DIMENSION MX(9,4)
      DIMENSION OLDOUT(9)
      REAL LAND,MHP
      REAL LIFE,LVALUE
      INTEGER GRADE,PGRADE
      DATA DDOUNT/.05/
      DATA NECOST,NOCOST/ 9, 3/
      DATA COHORT(1,1),COHORT(1,2)/10HBREEDING C,10HOWS        /
      DATA COHORT(2,1),COHORT(2,2)/10HREPLACEMEN,10HT HEIFERS /
      DATA COHORT(3,1),COHORT(3,2)/10HBREEDING H,10HEIFERS     /
      DATA COHORT(4,1),COHORT(4,2)/10HMATURE BUL,10HLS         /
      DATA COHORT(5,1),COHORT(5,2)/10HYOUNG BULL,10HS          /
      DATA COHORT(6,1),COHORT(6,2)/10HSTEERS    ,10H           /
      DATA COHORT(7,1),COHORT(7,2)/10HMALE CALVE,10HS          /
      DATA COHORT(8,1),COHORT(8,2)/10HFEMALE CAL,10HVES        /
      DATA COHORT(9,1),COHORT(9,2)/10HSLAUGHTER ,10HHEIFERS    /
      DATA DISC/.00,.02,.04,.06,.08,.10,.12,.14,.16/
      DATA FMATUR/1.0,1.0,2.0,2.0,2.0,2.0,2.5,3.0,4.0,5.0/
      DATA FATFAC/.00/
C
C
      DATA BTEMP,MHF/10.0,1.10/
      DATA BUGEST/0.75,0.72,0.69,0.66,0.63,0.60,0.57,0.54,0.51,0.48/
      DATA MSTOCK/.5,1.0,1.5,2.0,2.5,3.0/
      DATA QUALTY/1.00,0.98,0.96,0.96,0.94,0.92,0.90,0.88,0.86,0.84,0.82/
      DATA SRATEF/0.2,0.2,0.3,0.4,0.5,0.6,0.7,0.8,0.8,0.8/
      DATA TEMP/.00,0.05,0.15,0.22,0.60,0.90,1.00,0.55,0.10,0.00/
      DATA WASTEF/1.0,1.1,1.2,1.3,1.4,1.5/
      DATA SOILNT/0.0,0.05,0.15,0.40,0.60,0.80,1.00,1.00,1.00,1.00/
C
C     DATA VALUES FOR REPRODUCTIVE SUBROUTINES
C
      DATA YMILK/5.4,5.0,4.5,4.2,3.9,3.3,2.8/
      DATA PDI/.03,.03,.03,.03,.0275,.025,.0242,.0236,.0231,.0228,
     1         .022,.0209,.02/
      DATA TONM,SMM,DIFM,KM/1.30,0.0,0.08333,6/
      DATA WSM,WDIF,KW/0.0,45.36,12/
      DATA CFC,CFO,CFE/0.98,1.00,0.95/
      DATA POPT/.985,0.942,.931,1.00,0.998,0.984,0.961,0.921,
     1          .868,0.811,.741/
      DATA CONCP/0.65,0.77,.89,0.95,0.99/
      DATA DEST,GEST,DM,CFC,_AC,IPREC/0.0575,0.777,0.0833,0.98,0,3/
C
C
C     PROGRAM MODE CONTROL, EITHER INITIAL START OR RESTART
C
      READ(1,2000) MODE
 2000 FORMAT(I2)
      IF(MODE.EQ.0) GO TO 3000
      BUFFER IN(6,1) (ARAY01(1),ARAY01(37))
      IF(UNIT(6)) 2010,4010,4010
 2010 BUFFER IN(6,1) (ARAY02(1),ARAY02(416))
      IF(UNIT(6)) 2020,4020,4020
 2020 BUFFER IN(6,1) (ARAY03(1),ARAY03(545))
      IF(UNIT(6)) 2030,4030,4030
 2030 BUFFER IN(6,1) (ARAY04(1),ARAY04(361))
      IF(UNIT(6)) 2040,4040,4040
 2040 BUFFER IN(6,1) (ARAY05(1),ARAY05(321))
      IF(UNIT(6)) 2050,4050,4050
 2050 BUFFER IN(6,1) (ARAY06(1),ARAY06(563))
```

```
      IF(UNIT(6)) 2060,4060,4060
 2060 BUFFER IN(6,1) (ARAY7(1),ARAY7(862))
      IF(UNIT(6)) 2070,4070,4070
 2070 BUFFER IN(6,1) (ARAY8(1),ARAY8(351))
      IF(UNIT(6)) 2080,4080,4080
 2080 BUFFER IN(6,1) (ARAY9(1),ARAY9(1472))
      IF(UNIT(6)) 2090,4090,4090
 2090 BUFFER IN(6,1) (ARAY10(1),ARAY10(98))
      IF(UNIT(6)) 2100,410.,410.
 2100 BUFFER IN(6,1) (ARAY11(1),ARAY11(3))
      IF(UNIT(6)) 2110,411.,411.
 2110 BUFFER IN(6,1) (ARAY12(1),ARAY12(5218))
      IF(UNIT(6)) 2120,412.,412.
 2120 BUFFER IN(6,1) (ARAY13(1),ARAY13(4[illegible]))
      IF(UNIT(6)) 2130,413.,413.
 2130 BUFFER IN(6,1) (ARAY14(1),ARAY14(28))
      IF(UNIT(6)) 2140,414.,414.
 2140 BUFFER IN(6,1) (ARAY15(1),ARAY15(38))
      IF(UNIT(6)) 2150,415.,415.
 2150 BUFFER IN(6,1) (ARAY16(1),ARAY16(128))
      IF(UNIT(6)) 2160,416.,416.
 2160 BUFFER IN(6,1) (ARAY17(1),ARAY17(65))
      IF(UNIT(6)) 2170,417.,417.
 2170 BUFFER IN(6,1) (ARAY18(1),ARAY18(311))
      IF(UNIT(6)) 2180,418.,418.
 2180 BUFFER IN(6,1) (ARAY19(1),ARAY19(32))
      IF(UNIT(6)) 2190,419.,419.
 2190 BUFFER IN(6,1) (ARAY20(1),ARAY20(28))
      IF(UNIT(6)) 2193,420.,420.
 2193 BUFFER IN(6,1) (ARAY21(1),ARAY21(83.))
      IF(UNIT(6)) 2195,421.,421.
 2195 BUFFER IN(6,1) (ARAY22(1),ARAY22(97))
      IF(UNIT(6)) 2197,422.,422.
 2197 BUFFER IN(6,1) (ARAY23(1),ARAY23(15))
      IF(UNIT(6)) 3100,423.,423.
 3000 CONTINUE
C
C     INITIALIZATIONS TO THE MODEL FOR AN INITIAL START(MODE = 0)
C
C     RUN PARAMETERS
C
      READ(1,15) DUR,DT,DETPRT,PRTCHG,PRTVL1,PRTVL2,BEGPRT,ENGLSH,IPRINT
   15 FORMAT(8F8.0,I2)
      ISTART = 1
      SELPRT = 0.0
      IF(DETPRT.EQ.0.) SELPRT = 1.0
      NITER =(DUR/DT) + 1.0
      PRTIME = BEGPRT
      PRTVL = PRTVL1
      READ(1,15) T
      NSTRT1 = NSTRT2 = NSTRT3 = 0
      NSTRT4 = NSTRT5 = NSTRT6 = 0
      DAYS = DT*365.0
C
C     INITIALIZATIONS OF SOME CONTROL VARIABLES
C
      READ(1,16) TBRD(1),TBRD(2),TSPRNG,TFALL,TWEAN,TCULL,WLENGH
   16 FORMAT(10F8.2)
      TBRD(3) = TBRD(2)
      READ(1,16) DURB(1),DURB(2),DURB(3)
      READ(1,16) C1,C2,C3,C4,C5,C6,C9,C10,C11
C
C-----INITIALIZATIONS PERTAINING TO THE ANIMAL HERD--------------------
C
C
      READ(1,17) (KK(IKV),IKV=1,9)
   17 FORMAT(10I3)
      READ(1,19) (DELAY(IDV),IDV=1,9)
   19 FORMAT(10F8.0)
      READ(1,19) (DR(IDRV),IDRV=1,9)
C
      DO 25 IN=1,9
      ADDRT(IN) = 0.0
      KNOWS(IN) = 0.0
      DELAYP(IN) = DELAY(IN)
   25 CONTINUE
      KNOWS(2) = DELAYP(2)/DT + 0.5
      IF(KNOWS(2).GT.KK(2)) KNOWS(2) = KK(2)
      KNOWS(3) = DELAYP(3)/DT + 0.5
      IF(KNOWS(3).GT.KK(3)) KNOWS(3) = KK(3)
C
```

```
C
      DO 35 II=1,9
      JJUP = KK(II)
      READ(1,30) (SUBPOP(II,JJ),JJ=1,JJUP)
   30 FORMAT(10F8.0)
   35 CONTINUE
C
      DO 50 IA=1,9
      DO 40 JA=1,40
      RIN(IA,JA) = 0.0
   40 CONTINUE
   50 CONTINUE
      DO 70 IB=1,9
      IF(IB.EQ.1) GO TO 70
      IF(IB.EQ.5) GO TO 70
      IF(IB.EQ.7) GO TO 70
      IF(IB.EQ.8) GO TO 70
      KUPA = KK(IB)
      A = FLOAT(KUPA)/DELAY(IB)
      DO 60 JB=1,KUPA
      RIN(IB,KUPA+1-JB) = A*SUBPOP(IB,JB)
   60 CONTINUE
   70 CONTINUE
      DO 75 IC=2,3
      JUPA = DELAY(IC)/DT + 0.5
      IF(JUPA.GT.KK(IC)) JUPA = KK(IC)
      IDIFF = KK(IC) - JUPA
      DO 73 JC=1,JUPA
      RIN(IC,JUPA+1-JC) = SUBPOP(IC,IDIFF+JC)/DT
   73 CONTINUE
   75 CONTINUE
      DO 80 ID=7,8
      JUPB = KK(ID)
      DO 77 JD=1,JUPB
      RIN(ID,JUPB+1-JD) = SUBPOP(ID,JD)/DT
   77 CONTINUE
   80 CONTINUE
      TPOP = 0.0
      DO 95 IE=1,9
      POP(IE) = 0.0
      JUPC = KK(IE)
      DO 90 JE=1,JUPC
      POP(IE) = POP(IE) + SUBPOP(IE,JE)
   90 CONTINUE
      TPOP = TPOP + POP(IE)
   95 CONTINUE
C
      DO 110 I=1,9
      ROUT(I) = RIN(I,1)
      OLDOUT(I) = ROUT(I)
      ASOLD(I) = 0.0
  110 CONTINUE
C
      ASALES(1) = INT(ROUT(1)*DT + 0.5)
      ASALES(2) = INT(ROUT(2)*DT*(1. - C10) + 0.5)
      ASALES(3) = INT(ROUT(3)*DT*C11 + 0.5)
      ASALES(4) = INT(ROUT(4)*DT + 0.5)
      ASALES(5) = INT(ROUT(5)*DT*C6 + 0.5)
      ASALES(6) = INT(ROUT(6)*DT + 0.5)
      ASALES(7) = INT(ROUT(7)*DT*C4 + 0.5)
      ASALES(8) = INT(ROUT(8)*DT*C9 + 0.5)
      ASALES(9) = INT(ROUT(9)*DT + 0.5)
C
      DO 114 I=1,9
      DO 113 J=1,40
      W(I,J) = 0.0
  113 CONTINUE
  114 CONTINUE
      DO 117 IF=1,9
      JFUP = KK(IF)
      READ(1,115) (W(IF,JF),JF=1,JFUP)
  115 FORMAT(10F8.0)
  117 CONTINUE
C
      DO 123 IG=1,9
      JGUP = KK(IG)
      READ(1,121) (DGAIN(IG,JG),JG=1,JGUP)
  121 FORMAT(10F8.0)
  123 CONTINUE
C
      READ(1,121) (WGTMAX(IBC),IBC=1,9)
```

```
C
      DO 125 IH=1,9
      JHUP = KK(IH)
      READ(1,122) (GRADE(IH,JH),JH=1,JHUP)
  122 FORMAT(4I2)
  125 CONTINUE
C
      READ(1,121) (FEEDAL(IBD),IBD=1,9)
      READ(1,121) (CNCAL(IBE),IBE= 1,9)
C
      TAGWGT = 0.0
      TAFEED = 0.0
      DO 130 IST=1,9
      TAFEED = TAFEED + FEEDAL(IST) + CNCAL(IST)
      JSTUP = KK(IST)
      DO 129 JST=1,JSTUP
      TAGWGT = TAGWGT + DGAIN(IST,JST)*DAYS
  129 CONTINUE
  130 CONTINUE
C
C-----INITIALIZING FINANCIAL AND COST PARAMETERS-----------------------
C
      DO 133 NPRO=1,26
      CASH(NPRO) = 0.0
  133 CONTINUE
      READ(1,121) WCAPT,FSERCH,PADJST
      NRSORC = 8
      READ(1,121) CAPTL(1),CAPTL(2),CAPTL(3),CAPTL(6),LVALUE,LIFE
      DEBTC = CAPTL(1)
      DENOM = 0.0
      ILIFE = INT(LIFE)
      DO 134 LIFDEX=1,ILIFE
      DENOM = DENOM + LIFDEX
  134 CONTINUE
      READ(1,121) SDEBT,SDEBTR,SREPAY,SLOAN,PROTAX,TAXINC,TAXLIB
      SDEBTC = SDEBT
      READ(1,137) OVHEAD,DEP_AT,SPBRED,SPVACC,HRCALV,HRFED1,HRFED2,
     1HRBRED,HRVACC,HRMEAN,HRCULL,HRCAST,HRSEED,HRFERT,HRHARV,HREQIP,
     2HREFCAP,HRMAIN,SPUTL1,SPUTL2,SPUTL3,SPUTL4,SPUTL5,SPSEED,SPFERT,
     3SPREP1,SPREP2,SPREP3,H_EASE
  137 FORMAT(10F8.0)
      READ(1,139) NPOINT,GAP
  139 FORMAT(I4,F8.0)
C
C     EXPECTED PRICE SERIES READ IN
C
      DO 142 IEXP1=1,20
      READ(1,137) (APFUTR(JEXP1,IEXP1),JEXP1=1,5)
  142 CONTINUE
      DO 143 IEXP2=1,5
      READ(1,137) (APPAST(JEXP2,IEXP2),JEXP2=1,5)
  143 CONTINUE
      DO 140 IEXP5=1,10
      READ(1,137) (BPFUTR(JEXP5,IEXP5),JEXP5=1,8)
  140 CONTINUE
      DO 141 IEXP6=1,5
      READ(1,137) (BPPAST(JEXP6,IEXP6),JEXP6=1,5)
  141 CONTINUE
      DO 144 IEXP3=1,10
      READ(1,137) (CPFUTR(JEXP3,IEXP3),JEXP3=1,20)
  144 CONTINUE
      DO 146 IEXP4=1,5
      READ(1,137) (CPPAST(JEXP4,IEXP4),JEXP4=1,20)
  146 CONTINUE
C
C     VARIABLES FOR ASSET VALUATION READ IN
C
      READ(1,121) (OLDVAL(I),I=1,9)
      READ(1,121) (OLDCRP(N),N=1,20)
      DO 145 I=1,9
      JUP = KK(I)
      READ(1,121) (ASTVAL(I,J),J=1,JUP)
  145 CONTINUE
C
C     COMPUTING THE ORIGINAL ASSET VALUE OF THE ENTERPRISE--OASSET
C
      OASSET = 0.0
      DO 147 IOA=1,9
      OASSET = OASSET + OLDVAL(IOA)
  147 CONTINUE
      DO 148 NOA=1,20
```

```
      OASSET = OASSET + OLOCRP(NOA)                                     MAIN
  148 CONTINUE                                                          MAIN
      OASSET = OASSET - CAPT_(1) - SDEBT + WCAPT + LVALUE               MAIN
C                                                                       MAIN
C-----CROP AND FEED STOCK VARIABLES READIN AND INITIALIZED-------------- MAIN
C                                                                       MAIN
      READ(1,150) NSTOCK,NLANDS,SPLIT                                   MAIN
  150 FORMAT(2I3,F8.0)                                                  MAIN
C                                                                       MAIN
C     READING IN THE FEED STOCK NAMES                                   MAIN
C                                                                       MAIN
      DO 153 NXY=1,NSTOCK                                               MAIN
      READ(1,152) CNAME(NXY,1),CNAME(NXY,2)                             MAIN
  152 FORMAT(2A8)                                                       MAIN
  153 CONTINUE                                                          MAIN
      PREPAR = 0.0                                                      MAIN
      NCROPS = NSTOCK                                                   MAIN
      DO 160 IS=1,NSTOCK                                                MAIN
      READ(1,155) FSTOCK(IS),FQUAL(IS),SPOIL(IS),FRCLOS(IS),CSALES(IS), MAIN
     1STKPUR(IS),XCPROD(IS),XCQUAL(IS),PRQUAL(IS),STKFED(IS)            MAIN
  155 FORMAT(10F8.0)                                                    MAIN
      STKLOS(IS) = FSTOCK(IS)*FRCLOS(IS)*DT                             MAIN
      CSOLD(IS) = 0.0                                                   MAIN
      CPURCH(IS) = 0.0                                                  MAIN
      CFEED(IS,1) = CFEED(IS,2) = 0.0                                   MAIN
      CROPQ(IS) = 0.0                                                   MAIN
      CROP(IS,1) = CROP(IS,2) = 0.0                                     MAIN
      CROPQL(IS,1) = CROPQL(IS,2) = 0.0                                 MAIN
  160 CONTINUE                                                          MAIN
C                                                                       MAIN
C     READING IN CROP PRODUCTION AND CROP QUALITY IN DYNAMIC TIME       MAIN
C                                                                       MAIN
      DO 163 IAD=1,NPOINT                                               MAIN
      READ(1,155) (READC1(IAD,JAD),JAD=1,NSTOCK)                        MAIN
      READ(1,155) (READC3(IAD,JAD),JAD=1,NSTOCK)                        MAIN
      READ(1,155) (READC2(IAD,JAD),JAD=1,NSTOCK)                        MAIN
      READ(1,155) (READC4(IAD,JAD),JAD=1,NSTOCK)                        MAIN
  163 CONTINUE                                                          MAIN
      READ(1,155) (LAND(NMK),NMK=1,NLANDS)                              MAIN
C                                                                       MAIN
      SNZERO = 0.0                                                      MAIN
      SMZERO = 0.0                                                      MAIN
C                                                                       MAIN
C     THE BASE WEATHER CYCLE OF THE SITE READ IN                        MAIN
C                                                                       MAIN
      DO 170 IIY=1,NPOINT                                               MAIN
      READ(1,168) (READIN(IIY,JJY),JJY=1,3)                             MAIN
  168 FORMAT(3F10.0)                                                    MAIN
  170 CONTINUE                                                          MAIN
C                                                                       MAIN
      READ(1,155) (CLIMIT(NGA),NGA=1,NSTOCK)                            MAIN
      READ(1,120) (LABELF(NGB),NGB=1,NSTOCK)                            MAIN
      READ(1,121) (FPLANS(LX),LX=1,4)                                   MAIN
      DO 126 LY=1,4                                                     MAIN
      READ(1,121) (CATTIN(IEA,1,LY),IEA=1,9)                            MAIN
      READ(1,121) (CATTIN(IEB,2,LY),IEB=1,9)                            MAIN
      DO 127 NY=1,NSTOCK                                                MAIN
      READ(1,121) (DISTFD(IEC,NY,LY),IEC=1,9)                           MAIN
  127 CONTINUE                                                          MAIN
  126 CONTINUE                                                          MAIN
C                                                                       MAIN
C-----REPRODUCTIVE VARIABLE INITIALIZATION AND READ IN------------------ MAIN
C                                                                       MAIN
      READ(1,300) BEGDAV,ENDDAV                                         MAIN
  300 FORMAT(1,F8.0)                                                    MAIN
C                                                                       MAIN
      NR(1) = 1                                                         MAIN
      NR(2) = NR(3) = 16                                                MAIN
C                                                                       MAIN
      DO 302 ICV=1,3                                                    MAIN
      DO 301 JCV=1,40                                                   MAIN
      INB(ICV,JCV) = 0                                                  MAIN
  301 CONTINUE                                                          MAIN
  302 CONTINUE                                                          MAIN
      DO 303 IBA=1,3                                                    MAIN
      JBAMP = NK(IBA)                                                   MAIN
      DO 303 JBA=1,JBAMP                                                MAIN
      DO 303 LBA=1,8                                                    MAIN
      CPAT(IBA,JBA,LBA) = 0.0                                           MAIN
      CTIM(IBA,JBA,LBA) = 0.0                                           MAIN
  303 CONTINUE                                                          MAIN
```

```
  304 CONTINUE                                                          MAIN
  305 CONTINUE                                                          MAIN
C                                                                       MAIN
      DO 310 JBB=1,16                                                   MAIN
      COWNEW(1,JBB) = COWNEW(2,JBB) = 0.0                               MAIN
  310 CONTINUE                                                          MAIN
      COWNEW(1,1) = SUBPOP(2,KK(2))                                     MAIN
      COWNEW(2,1) = SUBPOP(3,KK(3))                                     MAIN
      SCNEW(1) = COWNEW(1,1)                                            MAIN
      SCNEW(2) = COWNEW(2,1)                                            MAIN
      READ(1,300) TWOLD,TYRLNG                                          MAIN
C                                                                       MAIN
      KCNT(1) = KCNT(2) = 1                                             MAIN
C                                                                       MAIN
      KOUNT = 1                                                         MAIN
      DO 320 IXG=1,3                                                    MAIN
      JXGLOW = NK(IXG)                                                  MAIN
      JXGUP = KK(IXG)                                                   MAIN
      IF(IXG.EQ.1) GO TO 315                                            MAIN
      JYGUP = NK(IXG) - 1                                               MAIN
      KDEX = 1                                                          MAIN
      DO 314 JYG=1,JYGUP                                                MAIN
      IF(SUBPOP(IXG,JYG).LE.0.0) GO TO 314                              MAIN
      READ(1,300) TBRTH(IXG-1,KDEX),WEANWT(IXG-1,KDEX)                  MAIN
      KDEX = KDEX + 1                                                   MAIN
  314 CONTINUE                                                          MAIN
  315 CONTINUE                                                          MAIN
      DO 316 JXG=JXGLOW,JXGUP                                           MAIN
      IF(SUBPOP(IXG,JXG).LE.0.0) GO TO 316                              MAIN
      READ(1,120) INB(IXG,JXG)                                          MAIN
      KXGUP=INB(IXG,JXG)                                                MAIN
      READ(1,300) (CTIM(IXG,JXG,KXG),KXG=1,KXGUP)                       MAIN
      READ(1,300) (CPAT(IXG,JXG,KXG),KXG=1,KXGUP)                       MAIN
      IF(IXG.EQ.1) GO TO 316                                            MAIN
      ICCONT(IXG-1,KCONT) = INB(IXG,JXG)                                MAIN
      KCONT = KCONT + 1                                                 MAIN
  316 CONTINUE                                                          MAIN
  320 CONTINUE                                                          MAIN
C                                                                       MAIN
C-----COMPUTING THE CALVING PATTERN FOR COWS AND HEIFERS                MAIN
C                                                                       MAIN
      DO 325 I1=1,2                                                     MAIN
      DO 324 J1=1,16                                                    MAIN
      DO 323 K1=1,13                                                    MAIN
      PRO(I1,J1,K1) = 0.0                                               MAIN
      HP(I1,J1,K1) = 0.0                                                MAIN
      PT(I1,J1,K1) = 0.0                                                MAIN
  323 CONTINUE                                                          MAIN
  324 CONTINUE                                                          MAIN
  325 CONTINUE                                                          MAIN
      READ(1,300) (WF(IWF),IWF=1,10)                                    MAIN
      SUM = 0.0                                                         MAIN
      SPOP = 0.0                                                        MAIN
      PCP(1) = 0.0                                                      MAIN
      DO 330 IMQ=2,3                                                    MAIN
      JMQLOW = NK(IMQ)                                                  MAIN
      JMQUP = KK(IMQ)                                                   MAIN
      KNT = 0                                                           MAIN
      DO 326 JMQ=JMQLOW,JMQUP                                           MAIN
      IF(SUBPOP(IMQ,JMQ).LE.0.0) GO TO 326                              MAIN
      KNT = KNT + 1                                                     MAIN
      MMQUP = INB(IMQ,JMQ)                                              MAIN
      DO 327 MMQ=1,MMQUP                                                MAIN
      HP(IMQ-1,KNT,MMQ) = CPAT(IMQ,JMQ,MMQ)/CFC                         MAIN
      PT(IMQ-1,KNT,MMQ) = CTIM(IMQ,JMQ,MMQ) - GEST                      MAIN
  327 CONTINUE                                                          MAIN
      SUM = SUM + HP(IMQ-1,KNT,MMQ)*SUBPOP(IMQ,JMQ)                     MAIN
      SPOP = SPOP + SUBPOP(IMQ,JMQ)                                     MAIN
  326 CONTINUE                                                          MAIN
  330 CONTINUE                                                          MAIN
      IF(SPOP .LE.0.0) GO TO 328                                        MAIN
      PCP(1) = SUM/SPOP                                                 MAIN
  328 CONTINUE                                                          MAIN
C                                                                       MAIN
      KQ = KK(1)                                                        MAIN
      DO 335 NIA=1,KQ                                                   MAIN
      NIB = NIA + 1                                                     MAIN
      PCP(NIB) = 0.0                                                    MAIN
      IF(SUBPOP(1,NIA).LE.0.0) GO TO 335                                MAIN
      LIB = INB(1,NIA)                                                  MAIN
      PCP(NIB) = CPAT(1,NIA,LIB)/CFC                                    MAIN
```

```
  335 CONTINUE                                                          MAIN      569
C-----SHIFTING THE CTIM,CPAT, AND INB VALUES FOR HEIFER SUBPOPULATIONS   MAIN      570
      DIFF = DT/2.                                                      MAIN      571
      IF((T.GT.BEGCAV-DIFF).AND.(T.LT.TBRD(1)-DIFF)) GO TO 340          MAIN      572
      IF(T.LE.BEGCAV) INTCV = (BEGCAV-DT-T)/DT + 0.5                    MAIN      573
      IF(T.GT.TBRD(1)-DIFF) INTCV = (1.5+BEGCAV-T)/DT                   MAIN      574
      DO 338 IIZ=2,3                                                    MAIN      575
      JIZLOW = KK(IIZ)                                                  MAIN      576
      JIZUP = KK(IIZ)                                                   MAIN      577
      DO 337 JIZ=JIZLOW,JIZUP                                           MAIN      578
      JAC = JIZUP+JIZLOW-JIZ                                            MAIN      579
      KIZUP = INB(IIZ,JAC-INTCV)                                        MAIN      580
      DO 336 KIZ=1,KIZUP                                                MAIN      581
      CPAT(IIZ,JAC,KIZ) = CPAT(IIZ,JAC-INTCV,KIZ)                       MAIN      582
      CTIM(IIZ,JAC,KIZ) = CTIM(IIZ,JAC-INTCV,KIZ)                       MAIN      583
  336 CONTINUE                                                          MAIN      584
      INB(IIZ,JAC) = INB(IIZ,JAC-INTCV)                                 MAIN      585
  337 CONTINUE                                                          MAIN      586
  338 CONTINUE                                                          MAIN      587
  340 CONTINUE                                                          MAIN      588
      DO 342 IOB=1,3                                                    MAIN      589
      DO 341 LOB=1,13                                                   MAIN      590
      OLOCP(IOB,LOB) = 0.0                                              MAIN      591
  341 CONTINUE                                                          MAIN      592
  342 CONTINUE                                                          MAIN      593
C                                                                       MAIN      594
C-----MISCELLANEOUS INITIALIZATIONS SUBJECT TO CHANGE------------------ MAIN      595
C                                                                       MAIN      596
      IF(T.GT.[illegible]) GO TO 405                                    MAIN      597
      DO 346 IML=1,9                                                    MAIN      598
      ACDMIR(IML) = 0.0                                                 MAIN      599
      ACDMIC(IML) = 0.0                                                 MAIN      600
      RHGAL(IML) = 0.0                                                  MAIN      601
  346 CONTINUE                                                          MAIN      602
      DO 348 NRC=1,NRSDRC                                               MAIN      603
      RESOFC(NRC) = 0.0                                                 MAIN      604
  348 CONTINUE                                                          MAIN      605
      DO 350 NLD=1,NLANDS                                               MAIN      606
      MHR(NLD) = 0.0                                                    MAIN      607
      DO 349 ICH=1,9                                                    MAIN      608
      POSTRB(NLD,ICH) = 0.0                                             MAIN      609
  349 CONTINUE                                                          MAIN      610
  350 CONTINUE                                                          MAIN      611
      DO 375 NLDA=1,NLANDS                                              MAIN      612
      OLDMHR(NLDA) = 0.0                                                MAIN      613
      MHR(NLDA) = 0.0                                                   MAIN      614
  375 CONTINUE                                                          MAIN      615
      JZJUP = KK(1)                                                     MAIN      616
      DO 379 JZJ=1,JZJUP                                                MAIN      617
      CULFRC(JZJ) = 0.10                                                MAIN      618
  379 CONTINUE                                                          MAIN      619
      DO 400 IFD=1,9                                                    MAIN      620
      TDMIR(IFD) = FEEDAL(IFD)                                          MAIN      621
      TDMIC(IFD) =  CNDAL(IFD)                                          MAIN      622
  400 CONTINUE                                                          MAIN      623
C                                                                       MAIN      624
C     FURTHER INITIALIZATION REQUIRED FOR A NON-ZERO TIME START         MAIN      625
C                                                                       MAIN      626
  405 IF(T.LE.[illegible]) GO TO 600                                    MAIN      627
      IF((T-INT(T).LT.TSPRNG).OR.(T-INT(T).GT.TFALL)) GO TO 440         MAIN      628
      READ(1,3[illegible]) (TMHR(LMHR),LMHR=1,5)                        MAIN      629
      READ(1,3[illegible]) CFINAL,REMOVL                                MAIN      630
      READ(1,407) (MHR(NDS),NDS=1,NLANDS)                               MAIN      631
  407 FORMAT(5F1[illegible].)                                           MAIN      632
      DO 41[illegible] NDR=1,NLANDS                                     MAIN      633
      OLDMHR(NDR) = MHR(NDR)                                            MAIN      634
  410 CONTINUE                                                          MAIN      635
      READ(1,407) (GRN(NGN),NGN=1,NLANDS)                               MAIN      636
      READ(1,407) (GR(NGR),NGR=1,NLANDS)                                MAIN      637
      READ(1,407) (DIGEST(NGD),NGD=1,NLANDS)                            MAIN      638
      READ(1,407) (SNUT(NSU),NSU=1,NLANDS)                              MAIN      639
      READ(1,407) (AHR(NAH),NAH=1,NLANDS)                               MAIN      640
      DO 42[illegible] NHR=1,NLANDS                                     MAIN      641
      READ(1,3[illegible]) (POSTRB(NHR,IHR),IHR=1,9)                    MAIN      642
      SUMC = 0.0                                                        MAIN      643
      DO 415 IIG=1,9                                                    MAIN      644
      SUMC = SUMC + POSTRB(NHR,IIG)*POP(IIG)                            MAIN      645
  415 CONTINUE                                                          MAIN      646
      STOCKL(NHR) = SUMC/LAND(NHR)                                      MAIN      647
  420 CONTINUE                                                          MAIN      648
      READ(1,407) (P(NP),NP=1,NLANDS)                                   MAIN      649
```

```
      READ(1,407) (ROOT(NRT),NRT=1,NLANDS)                              MAIN      650
      READ(1,407) (ROOTDT(NDT),NDT=1,NLANDS)                            MAIN      651
      READ(1,407) SUMTPF,ADGDAY,SM                                      MAIN      652
  440 CONTINUE                                                          MAIN      653
      READ(1,300) (ADORT(III),III=1,9)                                  MAIN      654
      READ(1,300) (ASOLD(IIJ),IIJ=1,9)                                  MAIN      655
      READ(1,300) (ACOMIC(IIL),IIL=1,9)                                 MAIN      656
      READ(1,300 )(ACUMIR(IIK),IIK=1,9)                                 MAIN      657
      READ(1,300) (CSOLD(NCR),NCR=1,NSTOCK)                             MAIN      658
      READ(1,300) (CROPG(NCG),NCG=1,NSTOCK)                             MAIN      659
      READ(1,300) (CPURCH(NCX),NCX=1,NSTOCK)                            MAIN      660
      READ(1,300) (CFEED(NCZ,1),NCZ=1,NSTOCK)                           MAIN      661
      READ(1,300) (PRODUC(LL),LL=1,9)                                   MAIN      662
      READ(1,300) (ACOSTD(II10),II10=1,5)                               MAIN      663
      READ(1,300) ( AREVD(II10),II10=1,5)                               MAIN      664
      READ(1,300) (ANCOST(II10),II10=1,5)                               MAIN      665
      READ(1,300) ( ANREV(II10),II10=1,5)                               MAIN      666
      READ(1,300) (TACASH(II10),II10=1,5)                               MAIN      667
      READ(1,300) (TACSRD(II10),II10=1,5)                               MAIN      668
      READ(1,300) ( TAXES(II10),II10=1,5)                               MAIN      669
      READ(1,300) (TAXESD(II10),II10=1,5)                               MAIN      670
      READ(1,300) ( TAGRP(II10),II10=1,5)                               MAIN      671
      READ(1,300) (TAGRPD(II10),II10=1,5)                               MAIN      672
      READ(1,300) (  TANP(II10),II10=1,5)                               MAIN      673
      READ(1,300) ( TANPD(II10),II10=1,5)                               MAIN      674
      READ(1,300) (CASH(LPF),LPF=1,20)                                  MAIN      675
C-----READING IN THE CALVING PATTERNS IF NECESSARY                      MAIN      676
      IF((T.LT.BEGDAV-DIFF).OR.(T.GT.ENDDAV)) GO TO 450                 MAIN      677
      ICAUP = (ENDDAV - BEGDAV)/DT + 0.5                                MAIN      678
      DO 445 IDA=1,3                                                    MAIN      679
      READ(1,407) (DFRAC(IDA,ICA),ICA=1,ICAUP)                          MAIN      680
  445 CONTINUE                                                          MAIN      681
  450 CONTINUE                                                          MAIN      682
  600 CONTINUE                                                          MAIN      683
C                                                                       MAIN      684
C-----PRINTING SELECTED INITIAL CONDITIONS TO VERIFY CARD INPUT         MAIN      685
C                                                                       MAIN      686
      WRITE(2,1105)                                                     MAIN      687
 1105 FORMAT(*1*10(4H----),*INITIAL CONDITIONS AND VALUES*,10(4H----)//) MAIN      688
      WRITE(2,1110)                                                     MAIN      689
 1110 FORMAT(10X,*  COHORT  *,15X,*DELAY*,4X,*STAGES*,5X,*DR    */)     MAIN      690
      DO 1120 I=1,9                                                     MAIN      691
      WRITE(2,1115) COHORT(I,1),COHORT(I,2),DELAY(I),KK(I),DR(I)        MAIN      692
 1115 FORMAT(10X,2A10,F10.4,I10,F10.3/)                                 MAIN      693
 1120 CONTINUE                                                          MAIN      694
      WRITE(2,1130) (N,N=1,9)                                           MAIN      695
 1130 FORMAT(40X,*HERD POPULATION DISTRIBUTION*//10X,10(*COHORT*,I2,    MAIN      696
     12X)/)                                                             MAIN      697
      DO 1140 J=1,40                                                    MAIN      698
      WRITE(2,1135) (SUBPOP(I,J),I=1,9)                                 MAIN      699
 1135 FORMAT(8X,10F10.0)                                                MAIN      700
 1140 CONTINUE                                                          MAIN      701
      WRITE(2,1145)                                                     MAIN      702
 1145 FORMAT(/8X,*TOTALS*)                                              MAIN      703
      WRITE(2,1135) (POP(I),I=1,9)                                      MAIN      704
      ASUM = 0.0                                                        MAIN      705
      DO 1170 I=1,9                                                     MAIN      706
      ASUM = ASUM + OLDVAL(I)                                           MAIN      707
 1170 CONTINUE                                                          MAIN      708
      CSUM = 0.0                                                        MAIN      709
      DO 1172 N=1,20                                                    MAIN      710
      CSUM = CSUM + OLDCRP(N)                                           MAIN      711
 1172 CONTINUE                                                          MAIN      712
      WRITE(2,1180)                                                     MAIN      713
 1180 FORMAT(/10X,*FINANCIAL STATEMENT*/)                               MAIN      714
      WRITE(2,1185) CAPTL(6),ASUM,CSUM,LVALUE,LIFE,CAPTL(1),SDEBT,WCAPT, MAIN      715
     1CAPTL(5),CAPTL(2)                                                 MAIN      716
 1185 FORMAT(8X,*CAPITAL INVESTMENT*,10X,F10.2/                         MAIN      717
     18X,*VALUE OF CATTLE*,13X,F10.2/                                   MAIN      718
     28X,*VALUE OF FEED STOCKS*,8X,F10.2/                               MAIN      719
     38X,*COST OF DEPRECIABLE ASSETS*,2X,F10.2/                         MAIN      720
     48X,*DEPRECIATION LIFE*,11X,F10.0/                                 MAIN      721
     58X,*LONG TERM DEBT*,14X,F10.2/                                    MAIN      722
     +8X,*SHORT TERM DEBT*,13X,F10.2/                                   MAIN      723
     +8X,*WORKING CAPITAL*,13X,F10.2/                                   MAIN      724
     68X,*ANNUAL INTEREST RATE*,8X,F10.3/                               MAIN      725
     78X,*MONTHLY REPAYMENT OF DEBT*,3X,F10.2/)                         MAIN      726
      WRITE(2,1190)                                                     MAIN      727
 1190 FORMAT(*1*10(4H----),*PAGE TWO*,10(4H----)//                      MAIN      728
     115X,*FEED PLANS PROJECTED FOR USE*/)                              MAIN      729
      DO 1210 IPLN=1,4                                                  MAIN      730
```

```
      WRITE(2,1195) IPLN,FPLANS(IPLN)                                   MAIN
 1195 FORMAT(10X,*---FEED PLAN*I2*---*//15X,*ENDING DATE*F7.3/)         MAIN
      WRITE(2,1200)                                                     MAIN
 1200 FORMAT(15X,*COHORT*,10X,*RHG. TON/ANIMAL*,10X,*CNC. TON/ANIMAL*,  MAIN
     110X,*(KG/DAY)*/)                                                  MAIN
      DO 1210 LPLN=1,9                                                  MAIN
      WRITE(2,1205) LPLN,CATTIN(LPLN,2,IPLN),CATTIN(LPLN,1,IPLN)        MAIN
 1205 FORMAT(17X,I2,14X,F10.2,15X,F10.2)                                MAIN
 1210 CONTINUE                                                          MAIN
 1215 CONTINUE                                                          MAIN
      PRINT1299                                                         MAIN
 1299 FORMAT(///5X,21HEND OF INITIAL VALUES)                            MAIN
C                                                                       MAIN
C     THE TIME SIMULATION UP TO THE TIME HORIZON                        MAIN
C                                                                       MAIN
 3100 NLOW = 1                                                          MAIN
      IF(MODE.EQ.1) NLOW = ITER                                         MAIN
      DO 3500 ITER = NLOW,NITER                                         MAIN
      IF((MODE.EQ.1).AND.(ITER.EQ.NLOW)) GO TO 3500                     MAIN
      T = T + DT                                                        MAIN
C-----------------------------------------------------------------------MAIN
C-----------------------------THE ENTERPRISE MODEL----------------------MAIN
C-----------------------------------------------------------------------MAIN
      CALL GENERT(T,DT,NSTOCK,0)                                        MAIN
      CALL EXOG(T,DT,ISTART)                                            MAIN
      CALL HOMOGY                                                       MAIN
      CALL WEIGHT(W,DGAIN,SUBPOP,OLDOUT)                                MAIN
      CALL FEEDS                                                        MAIN
      CALL FORAGE                                                       MAIN
      CALL INQUIR                                                       MAIN
      GO TO 3750                                                        MAIN
 3500 CALL RESPNS                                                       MAIN
 3750 CONTINUE                                                          MAIN
      CALL NORMAL                                                       MAIN
      CALL CONSUM                                                       MAIN
      CALL FINANC                                                       MAIN
      DO 3800 ISE=1,9                                                   MAIN
      OLDOUT(ISE) = FOUT(ISE)                                           MAIN
 3800 CONTINUE                                                          MAIN
C-----------------------------------------------------------------------MAIN
C-----------------------------THE END OF MODEL--------------------------MAIN
C-----------------------------------------------------------------------MAIN
      TPOP = 0.0                                                        MAIN
      DO 194 IZG=1,9                                                    MAIN
      TPOP = TPOP + POP(IZG)                                            MAIN
  194 CONTINUE                                                          MAIN
      IF(ABS(T-PRTIME).GT.DT/2.) GO TO 199                              MAIN
C                                                                       MAIN
C     PRINTING RESULTS                                                  MAIN
C                                                                       MAIN
      IF(T.EQ.PRTCHG) PRTVL=PRTVL2                                      MAIN
      PRTIME = T + PRTVL                                                MAIN
      IF(SELPRT.EQ.0.0) GO TO 100                                       MAIN
      CALL PRINTR(IPRINT)                                               MAIN
  100 IF(DETPRT.EQ.0.) GO TO 199                                        MAIN
      PRINT1097,T                                                       MAIN
 1097 FORMAT(1X,5(5H-----),*DETAILED SIMULATION PRINTOUT*,5(5H-----)//  MAIN
     110X,*CURRENT TIME =*,F5.3/)                                       MAIN
      PRINT1099                                                         MAIN
 1099 FORMAT(/5X,*EXOGENOUS VARIABLES FOR THIS TIME PERIOD*//           MAIN
     15X,*1. PRICES*/)                                                  MAIN
      PRINT1100,(NOUTA,NOUTA=1,5)                                       MAIN
 1100 FORMAT(8X,*CATTLE --- GRADE*,7X,5I10)                             MAIN
      PRINT1101,(APRICE(NOUTB),NOUTB=1,5)                               MAIN
 1101 FORMAT(19X,*VALUE ($/KG)*,5F10.2)                                 MAIN
      PRINT1102,(NOUTC,NOUTC=1,NSTOCK)                                  MAIN
 1102 FORMAT(8X,*CROPS --- CROP NUMBER *,15I7)                          MAIN
      PRINT1103,(CPRICE(NOUTD),NOUTD=1,NSTOCK)                          MAIN
 1103 FORMAT(18X,*VALUE ($/KG)*15F7.3)                                  MAIN
      PRINT1104,(NOUTE,NOUTE=1,NRSORC)                                  MAIN
 1104 FORMAT(8X,*RESOURCES --- NUMBER*,8X,10I10)                        MAIN
      PRINT1125,(BPRICE(NOUTF),NOUTF=1,NRSORC)                          MAIN
 1125 FORMAT(22X,*VALUE ($/UNIT)*10F10.2)                               MAIN
      PRINT1106                                                         MAIN
 1106 FORMAT(/5X,*2. CROP PRODUCTION*/)                                 MAIN
      PRINT1107,(NOUTG,NOUTG=1,NSTOCK)                                  MAIN
 1107 FORMAT(8X,*CROP NUMBER    *15I7)                                  MAIN
      PRINT1108,(CROP(NOUTH,1),NOUTH=1,NSTOCK)                          MAIN
 1108 FORMAT(8X,*AMNT. GROWN    *15F7.3)                                MAIN
      PRINT1109,(CROPVL(NOUTI,1),NOUTI=1,NSTOCK)                        MAIN
 1109 FORMAT(8X,*TON VALUE      *15F7.2)                                MAIN
```

```
      PRINT1119,(CROP(NOUTJ,2),NOUTJ=1,NSTOCK)                          MAIN      812
 1119 FORMAT(8X,*RES. HARVESTED*15F7.0)                                 MAIN      813
      PRINT1111,(CROPOL(NOUTK,2),NOUTK=1,NSTOCK)                        MAIN      814
 1111 FORMAT(8X,*TON VALUE      *15F7.2)                                MAIN      815
      PRINT1112                                                         MAIN      816
 1112 FORMAT(/5X*3. WEATHER*/)                                          MAIN      817
      PRINT1113,SOLAR,AVGTMP,RAIN                                       MAIN      818
 1113 FORMAT(8X,*SOLAR RADIATION(LY/DAY)*F10.0/                         MAIN      819
     18X,*AVERAGE TEMP. (DEG. C) *,F10.1/                               MAIN      820
     28X,*RAINFALL (CM/DAY)*7X,F10.2)                                   MAIN      821
      PRINT1402                                                         MAIN      822
 1402 FORMAT(/5X,*CURRENT MODEL VARIABLE VALUES*)                       MAIN      823
      PRINT1405                                                         MAIN      824
 1405 FORMAT(/5X,*4. FEED STOCK ACTIVITY*//                             MAIN      825
     18X,*CODE*,5X,*NAME*8X,*STOCK*,6X,*QUALITY*,4X,*PURCHASES*,8X,     MAIN      826
     2*SALES*,5X,*CAT. FEED*,7X,*LOSSES*/)                              MAIN      827
      DO 1407 IT=1,NSTOCK                                               MAIN      828
      PRINT1407,IT,CNAME(IT,1),CNAME(IT,2),FSTOCK(IT),FQUAL(IT),        MAIN      829
     1STKPUR(IT),CSALES(IT),STKFED(IT),STKLOS(IT)                       MAIN      830
 1407 FORMAT(9X,I2,2X,2A8,F10.0,F13.2,4(5X,F8.0))                       MAIN      831
 1410 CONTINUE                                                          MAIN      832
      PRINT1420                                                         MAIN      833
 1420 FORMAT(/5X,*5. CATTLE HERD ACTIVITY*//                            MAIN      834
     18X,*COHORT*,13X,*NUMBER*,5X,*SALES*,5X,*PURCHASES*,5X,            MAIN      835
     232H----------ALLOCATION----------,3X,23H------CONSUMPTION------/ MAIN      836
     361X,*FEEDS*,7X,*FORAGE*,5X,*CONCNTR.*8X*CONCNTR.*6X*ROUGHAGE*/)   MAIN      837
      DO 1430 IM=1,9                                                    MAIN      838
      APUR = 0.0                                                        MAIN      839
      IF(ADORT(IM).GT.0.0) APUR = INT(ADORT(IM)*DT)                     MAIN      840 4
      AA = BB = CC = DD = EE = 0.0                                      MAIN      841
      IF(POP(IM).LT.0.1) GO TO 423                                      MAIN      842
      AA= FEEDAL(IM)/POP(IM)                                            MAIN      843
      BB= TONIR(IM)/POP(IM)                                             MAIN      844
      CC= TONIC(IM)/POP(IM)                                             MAIN      845
      DD = (RHGAL(IM)-FEEDAL(IM))/POP(IM)                               MAIN      846
      EE = CNCAL(IM)/POP(IM)                                            MAIN      847
  423 CONTINUE                                                          MAIN      848
      PRINT1425,COHORT(IM,1),COHORT(IM,2),POP(IM),ASALES(IM),APUR,AA,   MAIN      849
     1DD,EE,CC,BB                                                       MAIN      850
 1425 FORMAT(8X,2A10,F5.0,F11.0,F12.0,F10.2,4X,F10.2,3X,F10.2,6X,F10.2, MAIN      851
     14X,F10.2)                                                         MAIN      852
 1430 CONTINUE                                                          MAIN      853
      PRINT1432,TPOP,ASALES(10)                                         MAIN      854
 1432 FORMAT(8X,*TOTAL*,15X,F5.0,F11.0)                                 MAIN      855
      PRINT1450                                                         MAIN      856
 1450 FORMAT(/5X,*6. FINANCIAL RESULTS*/)                               MAIN      857
      OTHERC = CAPTL(5) +  0.0                                          MAIN      858
      YEAR = T - INT(T + 0.0001)                                        MAIN      859
      IF(YEAR.LT.DT/2.) YEAR = 1.0                                      MAIN      860
      INDX = INT((YEAR+0.0001)/DT)                                      MAIN      861
      TNP = CASH(INDX) - CAPTL(4)                                       MAIN      862
      NCC = NCCOST + 1                                                  MAIN      863
      PRINT1455,AREV(10),ACOST(10),CREV(21),CCOST(NCC),OTHERC,TNP,      MAIN      864
     1CASH(INDX)                                                        MAIN      865
 1455 FORMAT(15X,*ANIMAL REVENUE*,F10.2/15X,*ANIMAL COSTS  *,F10.2/     MAIN      866
     115X,*CROP REVENUE  *F10.2/15X*CROP COSTS  *F12.2/                 MAIN      867
     215X,*OTHER EXPENSES*,F10.2//15X,*NET PROFIT    *,F10.2//          MAIN      868
     315X,*CASH FLOW     *,F10.2)                                       MAIN      869
      IF((T-INT(T).LT.TSPRNG).OR.(T-INT(T).GT.TFALL)) GO TO 1480        MAIN      870
      PRINT1460                                                         MAIN      871
 1460 FORMAT(//5X,*7. FORAGE GROWTH REPORT*//8X,*PARCEL*,5X,*SIZE(HEC)*, MAIN      872
     +10X,* 3. YIELD*,                                                  MAIN      873
     110X,*TON VALUE*,10X,*SOIL NUT. INDEX*/)                           MAIN      874
      DO 1475 NLNS=1,NLANDS                                             MAIN      875
      Y = GRN(NLNS)/LAND(NLNS)                                          MAIN      876
      PRINT1470,NLNS,LAND(NLNS),Y,DIGEST(NLNS),SNUT(NLNS)               MAIN      877
 1470 FORMAT(10X,I2,5X,F10.0,10X,F10.1,9X,F10.2,10X,F10.1)              MAIN      878
 1475 CONTINUE                                                          MAIN      879
 1480 CONTINUE                                                          MAIN      880
      IF(DETPRT.NE.0.0) GO TO 1400                                      MAIN      881
      PRINT1494                                                         MAIN      882
      PRINT1499                                                         MAIN      883
 1499 FORMAT(5X,*CURRENT SUBPOPULATIONS*)                               MAIN      884
      DO 1001 I=1,9                                                     MAIN      885
      DO 999 J=1,40                                                     MAIN      886
      PR(I,J) = 0.0                                                     MAIN      887
  999 CONTINUE                                                          MAIN      888
      JUP = KK(I)                                                       MAIN      889
      DO 1000 J=1,JUP                                                   MAIN      890
      PR(I,J) = SUBPOP(I,J)                                             MAIN      891
 1000 CONTINUE                                                          MAIN      892
```

```
1001 CONTINUE                                                           MAIN      893
     JMAX=MAX0(KK(1),KK(2),KK(3),KK(4),KK(5),KK(6),KK(7),KK(8),KK(9))   MAIN      894
     DO 1003 JJ=1,JMAX                                                  MAIN      895
     PRINT1002,(PR(II,JJ),II=1,9)                                       MAIN      896
1002 FORMAT(9F12.3)                                                     MAIN      897
1003 CONTINUE                                                           MAIN      898
     PRINT1004                                                          MAIN      899
1004 FORMAT(///)                                                        MAIN      900
     DO 1006 IIA=1,9                                                    MAIN      901
     DO 1005 JIA=1,40                                                   MAIN      902
     PR(IIA,JIA) = ENGLSH*W(IIA,JIA)                                    MAIN      903
1005 CONTINUE                                                           MAIN      904
1006 CONTINUE                                                           MAIN      905
     PRINT1008                                                          MAIN      906
1008 FORMAT(5X,*CURRENT SUBPOPULATION WEIGHTS*)                         MAIN      907
     DO 1009 JJI=1,JMAX                                                 MAIN      908
     PRINT1002,(PR(II,JJI),II=1,9)                                      MAIN      909
1009 CONTINUE                                                           MAIN      910
     PRINT1004                                                          MAIN      911
     PRINT1302                                                          MAIN      912
1302 FORMAT(5X,*CURRENT DAILY GAIN RATES*)                              MAIN      913
     DO 1305 JJJI=1,JMAX                                                MAIN      914
     PRINT1002,(DGAIN(IIJ,JJJI),IIJ=1,9)                                MAIN      915
1305 CONTINUE                                                           MAIN      916
1400 CONTINUE                                                           MAIN      917
     PRINT1500                                                          MAIN      918
1500 FORMAT(*1*)                                                        MAIN      919
     CALL PRINT2(IPRINT)                                                MAIN      920
 199 CONTINUE                                                           MAIN      921
     DO 26 NF=1,NSTOCK                                                  MAIN      922
     CROP(NF,1) = CROP(NF,2) = 0.0                                      MAIN      923
     CROPOL(NF,1) = CROPOL(NF,2) = 1.0                                  MAIN      924
  26 CONTINUE                                                           MAIN      925
     OG = 0.0                                                           MAIN      926
     DO 27 NH=1,NLANDS                                                  MAIN      927
     CROP(1,1) = CROP(1,1) + MHR(NH)*DAYS                               MAIN      928
     OG = OG + DIGEST(NH)*MHR(NH)*DAYS                                  MAIN      929
  27 CONTINUE                                                           MAIN      930
     IF(CROP(1,1).LT.1.0) GO TO 28                                      MAIN      931
     CROPOL(1,1) = OG/CROP(1,1)                                         MAIN      932
  28 CONTINUE                                                           MAIN      933
5000 CONTINUE                                                           MAIN      934
     STOP                                                               MAIN      935
4010 PRINT4015                                                          MAIN      936
4015 FORMAT(*1*,*ARAY01 NOT READ IN CORRECTLY*)                         MAIN      937
     STOP                                                               MAIN      938
4020 PRINT4025                                                          MAIN      939
4025 FORMAT(*1*,*ARAY02 NOT READ IN CORRECTLY*)                         MAIN      940
     STOP                                                               MAIN      941
4030 PRINT4035                                                          MAIN      942
4035 FORMAT(*1*,*ARAY03 NOT READ IN CORRECTLY*)                         MAIN      943
     STOP                                                               MAIN      944
4040 PRINT4045                                                          MAIN      945
4045 FORMAT(*1*,*ARAY04 NOT READ IN CORRECTLY*)                         MAIN      946
     STOP                                                               MAIN      947
4050 PRINT4055                                                          MAIN      948
4055 FORMAT(*1*,*ARAY05 NOT READ IN CORRECTLY*)                         MAIN      949
     STOP                                                               MAIN      950
4060 PRINT4065                                                          MAIN      951
4065 FORMAT(*1*,*ARAY06 NOT READ IN CORRECTLY*)                         MAIN      952
     STOP                                                               MAIN      953
4070 PRINT4075                                                          MAIN      954
4075 FORMAT(*1*,*ARAY07 NOT READ IN CORRECTLY*)                         MAIN      955
     STOP                                                               MAIN      956
4080 PRINT4085                                                          MAIN      957
4085 FORMAT(*1*,*ARAY08 NOT READ IN CORRECTLY*)                         MAIN      958
     STOP                                                               MAIN      959
4090 PRINT4095                                                          MAIN      960
4095 FORMAT(*1*,*ARAY09 NOT READ IN CORRECTLY*)                         MAIN      961
     STOP                                                               MAIN      962
4100 PRINT4105                                                          MAIN      963
4105 FORMAT(*1*,*ARAY10 NOT READ IN CORRECTLY*)                         MAIN      964
     STOP                                                               MAIN      965
4110 PRINT4115                                                          MAIN      966
4115 FORMAT(*1*,*ARAY11 NOT READ IN CORRECTLY*)                         MAIN      967
     STOP                                                               MAIN      968
4120 PRINT4125                                                          MAIN      969
4125 FORMAT(*1*,*ARAY12 NOT READ IN CORRECTLY*)                         MAIN      970
     STOP                                                               MAIN      971
4130 PRINT4135                                                          MAIN      972
4135 FORMAT(*1*,*ARAY13 NOT READ IN CORRECTLY*)                         MAIN      973
```

```
      STOP                                                              MAIN      974
4140  PRINT4145                                                         MAIN      975
4145  FORMAT(*1*,*ARAY14 NOT READ IN CORRECTLY*)                        MAIN      976
      STOP                                                              MAIN      977
4150  PRINT4155                                                         MAIN      978
4155  FORMAT(*1*,*ARAY15 NOT READ IN CORRECTLY*)                        MAIN      979
      STOP                                                              MAIN      980
4160  PRINT4165                                                         MAIN      981
4165  FORMAT(*1*,*ARAY16 NOT READ IN CORRECTLY*)                        MAIN      982
      STOP                                                              MAIN      983
4170  PRINT4175                                                         MAIN      984
4175  FORMAT(*1*,*ARAY17 NOT READ IN CORRECTLY*)                        MAIN      985
      STOP                                                              MAIN      986
4180  PRINT4185                                                         MAIN      987
4185  FORMAT(*1*,*ARAY18 NOT READ IN CORRECTLY*)                        MAIN      988
      STOP                                                              MAIN      989
4190  PRINT4195                                                         MAIN      990
4195  FORMAT(*1*,*ARAY19 NOT READ IN CORRECTLY*)                        MAIN      991
      STOP                                                              MAIN      992
4200  PRINT4205                                                         MAIN      993
4205  FORMAT(*1*,*ARAY20 NOT READ IN CORRECTLY*)                        MAIN      994
      STOP                                                              MAIN      995
4210  PRINT4215                                                         MAIN      996
4215  FORMAT(*1*,*ARAY21 NOT READ IN CORRECTLY*)                        MAIN      997
      STOP                                                              MAIN      998
4220  PRINT4225                                                         MAIN      999
4225  FORMAT(*1*,*ARAY22 NOT READ IN CORRECTLY*)                        MAIN     1000
      STOP                                                              MAIN     1001
4230  PRINT4235                                                         MAIN     1002
4235  FORMAT(*1*,*ARAY23 NOT READ IN CORRECTLY*)                        MAIN     1003
      END                                                               MAIN     1004
```

```
SUBROUTINE ALAC        73/73    CPT=1                                    FTN 4.5+410          07/19/76 .17.40.45

      SUBROUTINE ALAC                                                                          ALAC        2
C                                                                                              ALAC        3
C      THIS SUBROUTINE COMPUTES THE PERCENTAGES OF COWS WHICH HAVE                             ALAC        4
C      CALVED AND ARE LACTATING - PER SUBPOPULATION PER MONTH.                                 ALAC        5
C                                                                                              ALAC        6
C                                                                                              ALAC        7
      COMMON/SAVER4/Z,BFRAC(3,30),BR(3),FPOP(3)                                                ALAC        8
      COMMON/SYSVAR/T,DT,KK(9),KNOWS(9),SUBPOP(9,40),POP(9),ROUT(9),                           ALAC        9
     1              DELAY(9),DELAYP(9)                                                         ALAC       10
      COMMON/REPROD/TBPTH(2,16),DEST,GLST,TEST(3,40),BEGCAV,ENDCAV,                            ALAC       11
     1              INTCAV,DM,TEBC,CONCP(5),POPT(11),CPAT(3,40,13),                            ALAC       12
     2              CTIM(3,40,13),CFC,INB(3,40),NP(3),IPREG,LAC,                               ALAC       13
     3              PCC(10,14),PCP(11),PF(10),ICOUNT(2,16),CSM,CDIF,                           ALAC       14
     4              KC,GGEST,PHC(2,16,13),HP(2,16,13),PT(2,16,13),ML,                          ALAC       15
     5              MAXHF(2),HFOUT,AFEST(3,40),WFEST(3,40),FEST(2,16),                         ALAC       16
     6              CONNEW(2,16),KCNT(2),SCNEW(2),OLDCP(3,13),MOMX                             ALAC       17
      DIMENSION POLD(10),HOLD(2,16)                                                            ALAC       18
      N=INTCAV-1                                                                               ALAC       19
      ITIME = INT(T+0.0001)                                                                    ALAC       20
      K=KK(1)                                                                                  ALAC       21
      D=.125                                                                                   ALAC       22
      DO 1 I=1,K                                                                               ALAC       23
      POLD(I)=0.0                                                                              ALAC       24
      DO 1 IR=1,14                                                                             ALAC       25
    1 PCC(I,IR)=0.0                                                                            ALAC       26
      DO 2 I=2,3                                                                               ALAC       27
      DO 2 IR=1,16                                                                             ALAC       28
      HOLD(I-1,IR)=0.0                                                                         ALAC       29
      DO 2 IQ=1,13                                                                             ALAC       30
    2 PHC(I-1,IR,IQ)=0.0                                                                       ALAC       31
      KM=K-1                                                                                   ALAC       32
      A = BEGCAV + FLOAT(ITIME)                                                                ALAC       33
      B = A + DM                                                                               ALAC       34
      DO 11 NZ = 2,ML                                                                          ALAC       35
      IF(FPOP(2) .LE. 0.0) 30,31                                                               ALAC       36
   30 ASUM = 0.0                                                                               ALAC       37
      GO TO 33                                                                                 ALAC       38
   31 CONTINUE                                                                                 ALAC       39
      SUM=0.0                                                                                  ALAC       40
      KNNT = 0                                                                                 ALAC       41
      LI=KK(2)                                                                                 ALAC       42
      DO 15 IZ=1,LI                                                                            ALAC       43
      LIN=INB(2,IZ)                                                                            ALAC       44
      PHI=0.0                                                                                  ALAC       45
      DO 13 IY=1,LIN                                                                           ALAC       46
      IF(CTIM(2,IZ,IY) .GT. A .AND. CTIM(2,IZ,IY) .LE. B)12,13                                 ALAC       47
   12 PHI=AMAX1(PHI,CPAT(2,IZ,IY))                                                             ALAC       48
   13 CONTINUE                                                                                 ALAC       49
      SUM=SUM+PHI                                                                              ALAC       50
      IF(PHI .GT. 0.0)14,15                                                                    ALAC       51
   14 KNNT=KNNT+1                                                                              ALAC       52
      IF(PHI .GE. HOLD(1,KNNT)) GO TO 45                                                       ALAC       53
      PHC(1,KNNT,NZ) = 0.0                                                                     ALAC       54
      GO TO 46                                                                                 ALAC       55
   45 CONTINUE                                                                                 ALAC       56
      PHC(1,KNNT,NZ)=PHI-HOLD(1,KNNT)                                                          ALAC       57
   46 CONTINUE                                                                                 ALAC       58
      HOLD(1,KNNT) = PHI                                                                       ALAC       59
   15 CONTINUE                                                                                 ALAC       60
      IF(KNNT .LE. 0) GO TO 32                                                                 ALAC       61
      ASUM=SUM/KNNT                                                                            ALAC       62
      GO TO 33                                                                                 ALAC       63
   32 ASUM = 0.0                                                                               ALAC       64
   33 CONTINUE                                                                                 ALAC       65
      IF(FPOP(3) .LE. 0.0) 35,36                                                               ALAC       66
   35 BSUM = 0.0                                                                               ALAC       67
      GO TO 38                                                                                 ALAC       68
   36 CONTINUE                                                                                 ALAC       69
      SUM=0.0                                                                                  ALAC       70
      KNNT=0                                                                                   ALAC       71
      LO=KK(3)                                                                                 ALAC       72
      DO 19 KZ=1,LO                                                                            ALAC       73
      LON=INB(3,KZ)                                                                            ALAC       74
      RHO=0.0                                                                                  ALAC       75
      DO 17 KY=1,LON                                                                           ALAC       76
      IF(CTIM(3,KZ,KY) .GT. A .AND. CTIM(3,KZ,KY) .LE. B)16,17                                 ALAC       77
   16 RHO=AMAX1(RHO,CPAT(3,KZ,KY))                                                             ALAC       78
   17 CONTINUE
```

```
SUBROUTINE ALAC        73/73   OPT=1                                  FTN 4.5+410          07/19/76 .17.40.45

      SUM=SUM+RHO                                                                          ALAC        79
      IF(RHO .GT. 0.0)18,19                                                                ALAC        80
   18 KKNT=KKNT+1                                                                          ALAC        81
      IF(RHO .GE. HOLD(2,KKNT)) GO TO 47                                                   ALAC        82
      PHO(2,KKNT,NZ) = 0.0                                                                 ALAC        83
      GO TO 48                                                                             ALAC        84
   47 CONTINUE                                                                             ALAC        85
      PHO(2,KKNT,NZ)=RHO-HOLD(2,KKNT)                                                      ALAC        86
   48 CONTINUE                                                                             ALAC        87
      HOLD(2,KKNT) = RHO                                                                   ALAC        88
   19 CONTINUE                                                                             ALAC        89
      IF(KKNT .LE. 0) GO TO 37                                                             ALAC        90
      BSUM=SUM/KKNT                                                                        ALAC        91
      GO TO 38                                                                             ALAC        92
   37 BSUM = 0.0                                                                           ALAC        93
   38 CONTINUE                                                                             ALAC        94
      TRPOP = RPOP(2) + RPOP(3)                                                            ALAC        95
      IF(TRPOP .LE. 0.0) GO TO 40                                                          ALAC        96
      OMEGA = (ASUM*RPOP(2) + BSUM*RPOP(3))/TRPOP                                          ALAC        97
      IF(OMEGA .GE. POLD(1)) GO TO 49                                                      ALAC        98
      PCC(1,NZ) = 0.0                                                                      ALAC        99
      GO TO 50                                                                             ALAC       100
   49 CONTINUE                                                                             ALAC       101
      PCC(1,NZ) = OMEGA - POLD(1)                                                          ALAC       102
   50 CONTINUE                                                                             ALAC       103
      POLD(1) = OMEGA                                                                      ALAC       104
      GO TO 42                                                                             ALAC       105
   40 PCC(1,NZ) = 0.0                                                                      ALAC       106
   42 CONTINUE                                                                             ALAC       107
      IF(RPOP(1).GT.0.0) GO TO 44                                                          ALAC       108
      DO 43 NC=2,K                                                                         ALAC       109
      PCC(NC,NZ) = PCC(1,NZ)                                                               ALAC       110
      POLD(NC) = POLD(1)                                                                   ALAC       111
   43 CONTINUE                                                                             ALAC       112
      GO TO 55                                                                             ALAC       113
   44 CONTINUE                                                                             ALAC       114
      DO 5 NA=2,KM                                                                         ALAC       115
      NM=NA-1                                                                              ALAC       116
      IN=INB(1,NM)                                                                         ALAC       117
      ALPHA=0.0                                                                            ALAC       118
      DO 5 NB=1,IN                                                                         ALAC       119
      IF(CTIM(1,NM,NB) .GT. A .AND. CTIM(1,NM,NB) .LE. B )4,5                              ALAC       120
    4 ALPHA= AMAX1(ALPHA,CPAT(1,NM,NB))                                                    ALAC       121
    5 CONTINUE                                                                             ALAC       122
      IF(ALPHA .GE. POLD(NA)) GO TO 51                                                     ALAC       123
      PCC(NA,NZ) = 0.0                                                                     ALAC       124
      GO TO 52                                                                             ALAC       125
   51 CONTINUE                                                                             ALAC       126
      PCC(NA,NZ)=ALPHA-POLD(NA)                                                            ALAC       127
   52 CONTINUE                                                                             ALAC       128
      POLD(NA) = ALPHA                                                                     ALAC       129
    6 CONTINUE                                                                             ALAC       130
      KIN=INB(1,9)                                                                         ALAC       131
      GAM=0.0                                                                              ALAC       132
      DO 8 LN=1,KIN                                                                        ALAC       133
      IF(CTIM(1,9,LN) .GT. A .AND. CTIM(1,9,LN) .LE. B)7,8                                 ALAC       134
    7 GAM=AMAX1(GAM,CPAT(1,9,LN))                                                          ALAC       135
    8 CONTINUE                                                                             ALAC       136
      KON=INB(1,10)                                                                        ALAC       137
      DELT=0.0                                                                             ALAC       138
      DO 10 LO=1,KON                                                                       ALAC       139
      IF(CTIM(1,10,LO) .GT. A .AND. CTIM(1,10,LO) .LE. B)9,10                              ALAC       140
    9 DELT=AMAX1(DELT,CPAT(1,10,LO))                                                       ALAC       141
   10 CONTINUE                                                                             ALAC       142
      SIGMA = (GAM + DELT)/2.                                                              ALAC       143
      IF(SIGMA .GE. POLD(10)) GO TO 53                                                     ALAC       144
      PCC(10,NZ) = 0.0                                                                     ALAC       145
      GO TO 54                                                                             ALAC       146
   53 CONTINUE                                                                             ALAC       147
      PCC(10,NZ) = SIGMA-POLD(10)                                                          ALAC       148
   54 CONTINUE                                                                             ALAC       149
      POLD(10) = SIGMA                                                                     ALAC       150
   55 CONTINUE                                                                             ALAC       151
      A=B                                                                                  ALAC       152
      B=B+DM                                                                               ALAC       153
   11 CONTINUE                                                                             ALAC       154
      RETURN                                                                               ALAC       155
      END                                                                                  ALAC       156
```

```
SUBROUTINE AWPUB      73/73    OPT=1                                   FTN 4.5+410          07/19/76 .17.40.45

                SUBROUTINE AWPUB(TBTH,WNWT,ADG,AP,WP)                                          AWPUB      2
                                                                                               AWPUB      3
          C        THIS SUBROUTINE CALCULATES AGE AND WEIGHT AT FIRST                          AWPUB      4
          C        ESTRUS (I.E. PUBERTY). AP IS AGE IN YEARS, AND WP IS WEIGHT                 AWPUB      5
          C        IN KILOGRAMS.                (SOURCE- ARIJE AND WILTBANK)                   AWPUB      6
          C                                                                                    AWPUB      7
                                                                                               AWPUB      8
                BTH=(TBTH-INT(TBTH))*365.                                                      AWPUB      9
                IF(BTH.LT.0.) BTH = 365.0 + BTH                                                AWPUB     10
                A=724.*(ADG**2.)-(717.*ADG)                                                    AWPUB     11
                B=(.12*BTH)-(.34*WNWT)                                                         AWPUB     12
                AP=(631.+B+A)/365.                                                             AWPUB     13
                C=331.*(ADG**2.)-(202.*ADG)                                                    AWPUB     14
                D=(.60*BTH)+(.66*WNWT)                                                         AWPUB     15
                WP=(111.+C+D)                                                                  AWPUB     16
                RETURN                                                                         AWPUB     17
                END
```

```
      SUBROUTINE BIRAT                                                  BIRAT      2
C                                                                       BIRAT      3
C     DEVELOPED BY M. SCHUETTE AS OF SEPTEMBER 15, 1975                 BIRAT      4
C     VERSION AS OF 1/10/76                                             BIRAT      5
C                                                                       BIRAT      6
C        THIS SUBROUTINE ORGANIZES THE MULTIPLE CALVING PATTERNS        BIRAT      7
C        WITHIN THE SUBPOPULATIONS OF COHORTS 1,2, AND 3  INTO THREE    BIRAT      8
C        ARRAYS WHICH GIVE THE PERCENT OF COWS WHICH HAVE CALVED        BIRAT      9
C        IN EACH COHORT PER 0.025 YEAR INCREMENT OVER THE CALVING TIME. BIRAT     10
C                                                                       BIRAT     11
C        THIS SUBROUTINE IS CALLED BY SUBROUTINE BIRTH2 AT T = BEGCAV.  BIRAT     12
C                                                                       BIRAT     13
C-----THE FOLLOWING VARIABLES ARE USED....                              BIRAT     14
C                                                                       BIRAT     15
C        BEGCAV = THE BEGINNING OF CALVING IN CYCLE TIME                BIRAT     16
C        BFRAC(I,J) = THE FRACTION OF ACCUMULATED BIRTHS AT POINT J FOR BIRAT     17
C                     COHORT I                                          BIRAT     18
C        CPAT(I,L,M) = FRACTION OF CALVES BORN OF THOSE CONCEIVED OF    BIRAT     19
C                      COWS OF SUBPOP(I,L) ON THE MTH SERVICE           BIRAT     20
C        CTIM(I,L,M) = EXPECTED CALVING TIME CORRESPONDING TO CPAT(I,L,M BIRAT     21
C        ENDCAV = THE END OF CALVING IN CYCLE TIME                      BIRAT     22
C        INB(I,L) = THE NUMBER OF BREEDING CYCLES FOR SUBPOP(I,L)       BIRAT     23
C        KCNT(I) = NUMBER OF SUBPOPULATIONS OF COHORT I SHIFTED TO      BIRAT     24
C                  COHORT 1 BEFORE CALVING COMPLETE                     BIRAT     25
C        NR(I) = POSITION IN SUBPOPULATION CORRESPONDING TO MINIMUM AGE BIRAT     26
C                OF CALVING FOR COHORT I                                BIRAT     27
C        RPOP(I) = POPULATION I OF BREEDING GROUP OF HOMOGENEOUS NATURE BIRAT     28
C        COWNEW(I) = TOTAL NUMBER SHIFTED TO COHORT 1 FOM COHORT I      BIRAT     29
C        SUBPOP(I,L) = THE LTH SUBPOPULATION OF COHORT I                BIRAT     30
C                                                                       BIRAT     31
C-----END OF VARIABLE LIST                                              BIRAT     32
C                                                                       BIRAT     33
      COMMON/SYSVAR/T,DT,KK(3),KNOWS(9),SUBPOP(9,40),POP(9),ROUT(9),    BIRAT     34
     1              DELAY(9),DELAYP(9)                                  BIRAT     35
      COMMON/REPROD/TBRTH(2,16),DEST,GEST,TEST(3,40),BEGCAV,ENDCAV,     BIRAT     36
     1              INTCAV,DM,TEBC,CONCP(5),POPT(11),CPAT(3,40,13),     BIRAT     37
     2              CTIM(3,40,13),CFC,INB(3,40),NR(3),IPREG,LAC,        BIRAT     38
     3              PCD(13,14),PCP(12),WF(13),ICCONT(2,16),CSM,CDIF,    BIRAT     39
     4              KC,GGEST,PHC(2,16,13),MP(2,16,13),PT(2,16,13),ML,   BIRAT     40
     5              MAXHF(2),HFOUT,AFEST(3,40),WFEST(3,40),FEST(2,16),  BIRAT     41
     6              COWNEW(2,16),KCNT(2),SCNEW(2),DLOCP(3,13),MCMX      BIRAT     42
      COMMON/SAVER4/D,BFRAC(3,30),BR(3),RPOP(3)                         BIRAT     43
      DIMENSION OPAT(40)                                                BIRAT     44
C                                                                       BIRAT     45
C     INITIALIZE PARAMETERS                                             BIRAT     46
C                                                                       BIRAT     47
      D=.025                                                            BIRAT     48
      DCV=ENDCAV-BEGCAV                                                 BIRAT     49
      INTCAV=INT((DCV/D)+1.025)                                         BIRAT     50
      DO 20 I=2,3                                                       BIRAT     51
      IF((POP(I).NE.0.0). OR.(RPOP(I).NE.0.0)) GO TO 50                 BIRAT     52
      DO 47 JZ=1,30                                                     BIRAT     53
      BFRAC(I,JZ) = 0.0                                                 BIRAT     54
   47 CONTINUE                                                          BIRAT     55
      GO TO 20                                                          BIRAT     56
   50 CONTINUE                                                          BIRAT     57
      IM=I-1                                                            BIRAT     58
      A = BEGCAV + INT(T + 0.0001)                                      BIRAT     59
      B = A + D                                                         BIRAT     60
      BFRAC(I,1)=0.0                                                    BIRAT     61
      KN=KK(I)                                                          BIRAT     62
      N=NR(I)                                                           BIRAT     63
      DO 1 M=N,KN                                                       BIRAT     64
    1 OPAT(M)=0.                                                        BIRAT     65
C                                                                       BIRAT     66
C      RECORD NUMBERS OF HEIFERS WHICH MAY PRODUCE CALVES.              BIRAT     67
C                                                                       BIRAT     68
      HEFCOW = SUBPOP(I,KN)                                             BIRAT     69
      KS = KCNT(IM)                                                     BIRAT     70
      DO 3 KB=1,KS                                                      BIRAT     71
      HEFCOW = HEFCOW + COWNEW(IM,KB)                                   BIRAT     72
    3 CONTINUE                                                          BIRAT     73
C                                                                       BIRAT     74
C      COMPUTE BFRAC ARRAY FOR COHORTS 2 AND 3.                         BIRAT     75
C                                                                       BIRAT     76
      DO 100 J=2,INTCAV                                                 BIRAT     77
      JO=J-1                                                            BIRAT     78
      SUM=0.0                                                           BIRAT     79
      JKUP = KN - 1                                                     BIRAT     80
      DO 101 JK=N,JKUP                                                  BIRAT     81
      IN=INB(I,JK)                                                      BIRAT     82
```

```
      DO 42 JI=1,IN                                                     BIRAT     83
      IF((CTIM(I,JK,JI).LT.A).OR.(CTIM(I,JK,JI).GE.B)) GO TO 41         BIRAT     84
      SUM = SUM + (CPAT(I,JK,JI) - OPAT(JK))*SUBPOP(I,JK)               BIRAT     85
      OPAT(JK) = CPAT(I,JK,JI)                                          BIRAT     86
   41 CONTINUE                                                          BIRAT     87
   42 CONTINUE                                                          BIRAT     88
  101 CONTINUE                                                          BIRAT     89
      JYUP = INB(I,KN)                                                  BIRAT     90
      DO 44 JY=1,JYUP                                                   BIRAT     91
      IF((CTIM(I,KN,JY).LT.A).OR.(CTIM(I,KN,JY).GE.B)) GO TO 43         BIRAT     92
      SUM = SUM + (CPAT(I,KN,JY) - OPAT(KN))*HEFCOW                     BIRAT     93
      PRINT150,JY,SUM,CPAT(I,KN,JY),OPAT(KN),HEFCOW                     BIRAT     94
  150 FORMAT(* IN BIRAT, JY=*,I2,4(1X,F10.3))                           BIRAT     95
      OPAT(KN) = CPAT(I,KN,JY)                                          BIRAT     96
   43 CONTINUE                                                          BIRAT     97
   44 CONTINUE                                                          BIRAT     98
      IF(RPOP(I) .LE. 0.0)6,7                                           BIRAT     99
    6 BFRAC(I,J)=0.0                                                    BIRAT    100
      GO TO 8                                                           BIRAT    101
    7 BFRAC(I,J)=BFRAC(I,JO)+(SUM/RPOP(I))                              BIRAT    102
    8 CONTINUE                                                          BIRAT    103
      A=B                                                               BIRAT    104
      B=B+D                                                             BIRAT    105
  100 CONTINUE                                                          BIRAT    106
  200 CONTINUE                                                          BIRAT    107
C                                                                       BIRAT    108
C       COMPUTE BFRAC ARRAY FOR COHORT 1.                               BIRAT    109
C                                                                       BIRAT    110
      A = BESCAV + INT(T + 0.0001)                                      BIRAT    111
      B = A + D                                                         BIRAT    112
      BFRAC(1,1)=0.0                                                    BIRAT    113
      KN=KK(1)                                                          BIRAT    114
      DO 9 MP=1,KN                                                      BIRAT    115
    9 OPAT(MP)=0.0                                                      BIRAT    116
      SUB1 = SUBPOP(1,1) - SCNEW(1) - SCNEW(2)                          BIRAT    117
      DO 300 MC=2,INTCAV                                                BIRAT    118
      LM=MC-1                                                           BIRAT    119
      SUM=0.0                                                           BIRAT    120
      SUB1 = SUBPOP(1,1)-(SCNEW(1)+SCNEW(2))                            BIRAT    121
      DO 301 MK=1,KN                                                    BIRAT    122
      MM = MK + 1                                                       BIRAT    123
      IF(MK .EQ. 1)10,13                                                BIRAT    124
   10 IN = INB(1,1)                                                     BIRAT    125
      DO 12 MI=1,IN                                                     BIRAT    126
      IF((CTIM(1,MK,MI).LT.A).OR.(CTIM(1,MK,MI).GE.B)) GO TO 11         BIRAT    127
      ALPHA = CPAT(1,MK,MI) - OPAT(MK)                                  BIRAT    128
      SUM = SUM + ALPHA*(SUB1 + WF(MM)*SUBPOP(1,MM))                    BIRAT    129
      OPAT(1) = CPAT(1,1,MI)                                            BIRAT    130
   11 CONTINUE                                                          BIRAT    131
   12 CONTINUE                                                          BIRAT    132
      GO TO 301                                                         BIRAT    133
   13 IF(MK.EQ.KN) GO TO 23                                             BIRAT    134
      KIM = INB(1,MK)                                                   BIRAT    135
      BETA=0.0                                                          BIRAT    136
      DO 17 MB=1,KIM                                                    BIRAT    137
      IF((CTIM(1,MK,MB).LT.A).OR.(CTIM(1,MK,MB).GE.B))GO TO 16          BIRAT    138
      BETA = CPAT(1,MK,MB) - OPAT(MK)                                   BIRAT    139
      SUM = SUM + BETA*(SUBPOP(1,MK)*(1.-WF(MK))+SUBPOP(1,MM)*WF(MM))   BIRAT    140
      OPAT(MK) = CPAT(1,MK,MB)                                          BIRAT    141
   16 CONTINUE                                                          BIRAT    142
   17 CONTINUE                                                          BIRAT    143
      GO TO 301                                                         BIRAT    144
   23 KJ = INB(1,MK)                                                    BIRAT    145
      DO 28 MJ=1,KJ                                                     BIRAT    146
      IF((CTIM(1,MK,MJ).LT.A).OR.(CTIM(1,MK,MJ).GE.B)) GO TO 27         BIRAT    147
      GAMMA = CPAT(1,MK,MJ) - OPAT(MK)                                  BIRAT    148
      SUM = SUM + GAMMA*SUBPOP(1,MK)*(1. - WF(MK))                      BIRAT    149
      OPAT(MK) = CPAT(1,MK,MJ)                                          BIRAT    150
   27 CONTINUE                                                          BIRAT    151
   28 CONTINUE                                                          BIRAT    152
  301 CONTINUE                                                          BIRAT    153
      IF(RPOP(1) .LE. 0.0)18,19                                         BIRAT    154
   18 BFRAC(1,MC) = 0.0                                                 BIRAT    155
      GO TO 20                                                          BIRAT    156
   19 BFRAC(1,MC) = BFRAC(1,LM) + (SUM/RPOP(1))                         BIRAT    157
   20 CONTINUE                                                          BIRAT    158
      A=B                                                               BIRAT    159
      B=B+D                                                             BIRAT    160
  300 CONTINUE                                                          BIRAT    161
      PRINT500                                                          BIRAT    162
  500 FORMAT(//5X,*IN SUBROUTINE BIRAT, THE ACCUMULATED BIRTH PATTERNS* BIRAT    163
```

```
     1* ARE*//10X,*TIME*,10X,*COHORT 1*,10X,*COHORT 2*,10X,*COHORT 3*/)   BIRAT     164
      TPR = BEGCAV                                                       BIRAT     165
      DO 510 INTC=1,INTCAV                                               BIRAT     166
      PRINT505,TPR,(BFRAC(JNTC,INTC),JNTC=1,3)                           BIRAT     167
  505 FORMAT(5X,F10.4,3(10X,F8.4))                                       BIRAT     168
      TPR = TPR + D                                                      BIRAT     169
  510 CONTINUE                                                           BIRAT     170
      PRINT515                                                           BIRAT     171
  515 FORMAT(/5X,*END OF THE CALVING PERIOD*//)                          BIRAT     172
C                                                                        BIRAT     173
      RETURN                                                             BIRAT     174
      END                                                                BIRAT     175
```

```
      SUBROUTINE BIRTH2                                                 BIRTH2     2
      DEVELOPED BY M.SCHUETTE AS OF SEPTEMBER 15, 1975                  BIRTH2     3
C     VERSION AS OF 1/10/76                                             BIRTH2     4
C                                                                       BIRTH2     5
C      THIS SUBROUTINE DETERMINES THE PERCENT OF COWS IN COHORTS        BIRTH2     6
C      1,2 AND 3 WHICH CALVE OVER THE TIME PERIOD T-DT TO T.            BIRTH2     7
C      IT ALSO KEEPS A RUNNING COUNT OF THE NUMBER OF                   BIRTH2     8
C      REPRODUCING COWS FROM THE ABOVE COHORTS.  WHEN MULTIPLIED        BIRTH2     9
C      BY RPOP 1,2 AND 3 AND SUMMED, THE TOTAL NUMBER OF                BIRTH2    10
C      CALVES BORN OVER THE TIME INTERVAL IS OBTAINED.                  BIRTH2    11
C                                                                       BIRTH2    12
C-----THE FOLLOWING VARIABLES ARE USED....                              BIRTH2    13
C                                                                       BIRTH2    14
C        BEGCAV = BEGINNING OF CALVING IN CYCLE TIME                    BIRTH2    15
C        BFRAC(I,J) = FRACTION OF ACCUMULATED BIRTHS AT POINT J FOR     BIRTH2    16
C                     COHORT I                                          BIRTH2    17
C        BR(I) = AVERAGE BIRTH RATE FOR RPOP(I)                         BIRTH2    18
C        COWNEW(I,K) = NUMBER OF ANIMALS SHIFTED FROM COHORT I TO COHORT BIRTH2   19
C                      1 IN GROUP K(A GROUP IS A SUBPOPULATION)         BIRTH2    20
C        ENDCAV = END OF CALVING IN CYCLE TIME                          BIRTH2    21
C        INTCAV = NUMBER OF POINTS IN CALVING INTERVAL EVALUATED        BIRTH2    22
C        KCNT(I) = NUMBER OF SUBPOPULATIONS SHIFTED TO COHORT 1 FROM    BIRTH2    23
C                  COHORT I BEFORE CALVING PERIOD COMPLETED             BIRTH2    24
C        ROUT(I) = OUTPUT RATE OF COHORT I                              BIRTH2    25
C        RPOP(I) = POPULATION OF BREEDING GROUP I OF HOMOGENEOUS NATURE BIRTH2    26
C        SCNEW(I) = TOTAL NUMBER SHIFTED FROM COHORT I TO COHORT 1      BIRTH2    27
C        SUBPOP(I,L) = THE LTH SUBPOPULATION OF COHORT I                BIRTH2    28
C                                                                       BIRTH2    29
C-----END OF VARIABLE LIST                                              BIRTH2    30
C                                                                       BIRTH2    31
      COMMON/SYSVAR/T,DT,KK(9),KNOWS(9),SUBPOP(9,40),POP(9),ROUT(9),    BIRTH2    32
     1              DELAY(9),DELAYP(9)                                  BIRTH2    33
      COMMON/CNTROL/POSTRB(5,9),CNCAL(9),FEEDAL(9),RHGAL(9),CULFRC(10), BIRTH2    34
     1              TDIR(9),TDNC(9),TDMIR(9),TDMIC(9),AHR(5),MHR(5),    BIRTH2    35
     2              OLDMHR(5),RHGFRC(9,2),DNCFRC(9,20),ADFEED(9,2),     BIRTH2    36
     3              SPLIT,DURB(3),TBRD(3),TFRAC(10,2),ASELL(9),ADORT(9), BIRTH2   37
     4              C1,C2,C3,C4,C5,C6,C8,C9,C10,C11,TMEAN,TCULL         BIRTH2    38
      COMMON/REPROD/TBRTH(2,16),DEST,GEST,TEST(3,40),BEGCAV,ENDCAV,     BIRTH2    39
     1              INTCAV,D1,TEMC,CONCP(5),POPT(11),CPAT(3,4),13),     BIRTH2    40
     2              CTIM(3,4),13),CF(,INT(3,40),NR(3),IPREG,LAC,        BIRTH2    41
     3              RCO(1,14),PCP(11),WF(1,),ICOUNT(2,16),DSM,CDIF,     BIRTH2    42
     4              KO,GGEST,PHO(2,16,13),HP(2,16,13),PT(2,16,13),ML,   BIRTH2    43
     5              MAXHF(2),HFOUT,AFEST(3,40),WFEST(3,40),FEST(2,16),  BIRTH2    44
     6              CONNEW(2,16),KCNT(2),SCNEW(2),DLOCP(3,13),MOMX      BIRTH2    45
      COMMON/SAVER4/D,BFRAC(3,30),BR(3),RPOP(3)                         BIRTH2    46
      DIMENSION FBR(30)                                                 BIRTH2    47
      DEL=(ENDCAV-BEGCAV)+DT                                            BIRTH2    48
      IT = INT(T+0.0001)                                                BIRTH2    49
      YEAR = T - FLOAT(IT)                                              BIRTH2    50
      DIFF = DT/2.                                                      BIRTH2    51
      IF((YEAR.LE.BEGCAV-DIFF).OR.(YEAR.GT.BEGCAV+DIFF)) GO TO 9        BIRTH2    52
C                                                                       BIRTH2    53
C      COMPUTE NUMBERS OF REPRODUCING COWS AT START OF CALVING PERIOD.  BIRTH2    54
C                                                                       BIRTH2    55
      DO 8 JP=1,2                                                       BIRTH2    56
      JM=JP+1                                                           BIRTH2    57
      II=KK(JM)                                                         BIRTH2    58
      KO=NR(JM)                                                         BIRTH2    59
      SUM=0.0                                                           BIRTH2    60
      KL=KCNT(JP)                                                       BIRTH2    61
      DO 6 JL=1,KL                                                      BIRTH2    62
    6 SUM=SUM+COWNEW(JP,JL)                                             BIRTH2    63
      SCNEW(JP)=SUM                                                     BIRTH2    64
      DO 7 MJ=KO,II                                                     BIRTH2    65
    7 SUM=SUM+SUBPOP(JM,MJ)                                             BIRTH2    66
      RPOP(JM)=SUM                                                      BIRTH2    67
    8 CONTINUE                                                          BIRTH2    68
      RPOP(1)=POP(1)-(SCNEW(1)+SCNEW(2))                                BIRTH2    69
      CALL BIRAT                                                        BIRTH2    70
C                                                                       BIRTH2    71
C      COMPUTE NUMBERS OF REPRODUCING COWS DURING CALVING PERIOD.       BIRTH2    72
C                                                                       BIRTH2    73
    9 IF((YEAR.LT.BEGCAV+DIFF).OR.(YEAR.GE.ENDCAV)) GO TO 13            BIRTH2    74
      DO 38 IO=1,2                                                      BIRTH2    75
      IPUP = KCNT(IO)                                                   BIRTH2    76
      SCNEW(IO) = 0.0                                                   BIRTH2    77
      DO 36 IP=1,IPUP                                                   BIRTH2    78
      SCNEW(IO) = SCNEW(IO) + COWNEW(IO,IP)                             BIRTH2    79
   36 CONTINUE                                                          BIRTH2    80
   38 CONTINUE                                                          BIRTH2    81
      DO 12 LR=2,3                                                      BIRTH2    82
```

```
      LM=LR-1                                                           BIRTH2     83
      KQ=NR(LR)                                                         BIRTH2     84
      II=KK(LR)                                                         BIRTH2     85
      SUM=0.0                                                           BIRTH2     86
      DO 11 LS=KQ,II                                                    BIRTH2     87
   11 SUM=SUM+SUBPOP(LR,LS)                                             BIRTH2     88
      RPOP(LR)=SUM+SCNEW(LM)                                            BIRTH2     89
   12 CONTINUE                                                          BIRTH2     90
      RPOP(1)=POP(1)-(SCNEW(1)+SCNEW(2))                                BIRTH2     91
      IF(ROUT(2).LE.0.0) GO TO 30                                       BIRTH2     92
      COWNEW(1,KCNT(1)) = ROUT(2)*C10*DT                                BIRTH2     93
      KCNT(1) = KCNT(1) + 1                                             BIRTH2     94
   30 IF(ROUT(3).LE.0.0) GO TO 32                                       BIRTH2     95
      COWNEW(2,KCNT(2)) = ROUT(3)*(1. - C11)*DT                         BIRTH2     96
      KCNT(2) = KCNT(2) + 1                                             BIRTH2     97
   32 CONTINUE                                                          BIRTH2     98
   13 IF((YEAR.LE.ENDCAV).OR.(YEAR.GT.ENDCAV+DT)) GO TO 16              BIRTH2     99
C                                                                       BIRTH2    100
C     RESET TO INITIAL VALUES.                                          BIRTH2    101
C                                                                       BIRTH2    102
   14 DO 15 NZ=1,2                                                      BIRTH2    103
      NY=NZ+1                                                           BIRTH2    104
      KCNT(NZ)=1                                                        BIRTH2    105
      SCNEW(NZ)=0.0                                                     BIRTH2    106
      RPOP(NY)=0.0                                                      BIRTH2    107
      DO 15 MZ=1,16                                                     BIRTH2    108
      COWNEW(NZ,MZ)=0.0                                                 BIRTH2    109
   15 CONTINUE                                                          BIRTH2    110
      RPOP(1)=0.0                                                       BIRTH2    111
C                                                                       BIRTH2    112
C  * * COMPUTE BIRTH RATES * * * *                                      BIRTH2    113
C                                                                       BIRTH2    114
   16 CONTINUE                                                          BIRTH2    115
      IF(T.LT.BEGCAV+FLOAT(IT)-DEL) GO TO 28                            BIRTH2    116
      IF(YEAR.GE.BEGCAV+DIFF) GO TO 28                                  BIRTH2    117
      IF(ROUT(2).LE.0.0) GO TO 26                                       BIRTH2    118
      COWNEW(1,KCNT(1)) = ROUT(2)*DT*C10                                BIRTH2    119
      KCNT(1) = KCNT(1) + 1                                             BIRTH2    120
   26 IF(ROUT(3).LE.0.0) GO TO 28                                       BIRTH2    121
      COWNEW(2,KCNT(2)) = ROUT(3)*DT*(1. - C11)                         BIRTH2    122
      KCNT(2) = KCNT(2) + 1                                             BIRTH2    123
   28 CONTINUE                                                          BIRTH2    124
      IF((YEAR.GE.BEGCAV).AND.(YEAR.LE.ENDCAV)) GO TO 19                BIRTH2    125
   17 DO 18 IZ=1,3                                                      BIRTH2    126
   18 BR(IZ)=0.0                                                        BIRTH2    127
      GO TO 22                                                          BIRTH2    128
   19 CONTINUE                                                          BIRTH2    129
      TM=T-DT                                                           BIRTH2    130
      N=INTCAV-1                                                        BIRTH2    131
      BC = BEGCAV + FLOAT(IT)                                           BIRTH2    132
      DO 21 I=1,3                                                       BIRTH2    133
      DO 20 JQ=1,INTCAV                                                 BIRTH2    134
   20 FBR(JQ)=BFRAC(I,JQ)                                               BIRTH2    135
      BA=TABLE(FBR,BC,D,N,TM)                                           BIRTH2    136
      BB=TABLE(FBR,BC,D,N,T)                                            BIRTH2    137
      BR(I) = (BB - BA)/DT                                              BIRTH2    138
   21 CONTINUE                                                          BIRTH2    139
   22 CONTINUE                                                          BIRTH2    140
C                                                                       BIRTH2    141
      RETURN                                                            BIRTH2    142
      END                                                               BIRTH2    143
```

```
      SUBROUTINE CAPTAL                                                 CAPTAL     2
C                                                                       CAPTAL     3
C     VERSION AS OF APRIL 29, 1975                                      CAPTAL     4
C     THIS SUBROUTINE HANDLES DEBT REPAYMENT, INTEREST PAYMENTS, AND    CAPTAL     5
C     DEPRECIATION OF CERTAIN CAPITAL ITEMS.                            CAPTAL     6
C                                                                       CAPTAL     7
C-----THE FOLLOWING VARIABLES ARE USED....                              CAPTAL     8
C                                                                       CAPTAL     9
C        CAPTL(1) = OUTSTANDING DEBT TO BE REPAYED                      CAPTAL    10
C        CAPTL(2) = MONTHLY REPAYMENT TO PRINCIPAL                      CAPTAL    11
C        CAPTL(3) = ANNUAL INTEREST RATE ON OUTSTANDING DEBT            CAPTAL    12
C        CAPTL(4) = DEPRECIATION TAKEN IN THIS TIME PERIOD              CAPTAL    13
C        CAPTL(5) = TOTAL PAYMENTS OF DEBT AND INTEREST THIS PERIOD     CAPTAL    14
C        CAPTL(6) = ORIGINAL CAPITAL INVESTMENT REQUIRED FOR PROJECT    CAPTAL    15
C        LVALUE = ORIGINAL COST OF ASSETS TO BE DEPRECIATED             CAPTAL    16
C        LIFE = INTEGER NUMBER OF YEARS OVER WHICH DEPRECIATION ALLOWED CAPTAL    17
C        SDEBT = SHORT TERM DEBT                                        CAPTAL    18
C        SDEBTR = ANNUAL INTEREST RATE FOR SHORT TERM DEBT REPAYMENT    CAPTAL    19
C        SREPAY = MONTHLY REPAYMENT OF SHORT TERM DEBT REQUIRED         CAPTAL    20
C        SLOAN = QUANTITY OF FUNDS BORROWED SHORT TERM                  CAPTAL    21
C                                                                       CAPTAL    22
C-----END OF VARIABLE LIST                                              CAPTAL    23
C                                                                       CAPTAL    24
      COMMON/SYSVAR/T,DT,KK(9),KNOWS(9),SUBPOP(9,40),POP(9),ROUT(9),    CAPTAL    25
     1              DELAY(9),DELAYP(9)                                  CAPTAL    26
      COMMON/MONEY/ASALES(20),OSALES(20),AREV(10),OREV(21),CASH(25),    CAPTAL    27
     1              TAGRP(15),TANP(15),TAXES(15),TAGPD(15),TANPD(15),   CAPTAL    28
     2              TAXESO(15),NACOST,NOCOST,CAPTL(6),TACASH(15),       CAPTAL    29
     3              LVALUE,LIFE,ANREV(15),AREVD(15),ANCOST(15),         CAPTAL    30
     4              ACOST(21),ACOSTO(15),OCOST(21),TACSHO(15),          CAPTAL    31
     5              ASOLD(1.),OSOLD(21),SALES,DEBT,                     CAPTAL    32
      COMMON/SAVER2/TAXINC,TAXLIB,TSPAGE(20),NSTRT1,NSTRT2,NSTRT3,NSTRT4 CAPTAL    33
     1              ,DENOM,TAGWGT,TAFEED,WCAPT,NSTRT5,NSTRT6            CAPTAL    34
      COMMON/SAVER5/SDEBT,SDEBTR,SREPAY,SLOAN,PROTAX,SDEBTO,PRODUC(9)   CAPTAL    35
      REAL LIFE,LVALUE                                                  CAPTAL    36
C                                                                       CAPTAL    37
C     PERIODIC REPAYMENTS                                               CAPTAL    38
C                                                                       CAPTAL    39
      PMONTH = CAPTL(2)*DT/.8333333                                     CAPTAL    40
      IF(CAPTL(1).GT.PMONTH) GO TO 1                                    CAPTAL    41
      PMONTH = CAPTL(1)                                                 CAPTAL    42
    1 CONTINUE                                                          CAPTAL    43
      SMONTH = SREPAY*DT/.0833333                                       CAPTAL    44
      IF(SDEBT.GT.SREPAY) GO TO 2                                       CAPTAL    45
      SMONTH = SDEBT                                                    CAPTAL    46
    2 CONTINUE                                                          CAPTAL    47
      SINTER = DT*SDEBTR*SDEBT                                          CAPTAL    48
      PINTER = DT*CAPTL(3)*CAPTL(1)                                     CAPTAL    49
      CAPTL(1) = CAPTL(1) - PMONTH                                      CAPTAL    50
      SDEBT = SDEBT - SMONTH + SLOAN                                    CAPTAL    51
      CAPTL(5) = PMONTH + PINTER + SMONTH + SINTER                      CAPTAL    52
C                                                                       CAPTAL    53
C     DEPRECIATION OF CAPITAL ASSETS ALLOWED                            CAPTAL    54
C     SUM-OF-THE-DIGITS METHOD USED WITH ONE ANNUAL DEDUCTION           CAPTAL    55
C                                                                       CAPTAL    56
      YEAR = T - INT(T+1.0E-.6)                                         CAPTAL    57
      IF(ABS(YEAR-.29).GT.DT/2.) GO TO 10                               CAPTAL    58
      MYR = INT(LIFE+1.01-T)                                            CAPTAL    59
      CAPTL(4) = (FLOAT(MYR)/DENOM)*LVALUE                              CAPTAL    60
      RETURN                                                            CAPTAL    61
   10 CAPTL(4) = 0.0                                                    CAPTAL    62
C                                                                       CAPTAL    63
      RETURN                                                            CAPTAL    64
      END                                                               CAPTAL    65
```

```
      SUBROUTINE CBOX(CYCLE,LT,NCY,NK)                                  CBOX      2
      DIMENSION CYCLE(1)                                                CBOX      3
      NK = NK + 1                                                       CBOX      4
      IF(NCY.GT.NK) GO TO 1                                             CBOX      5
      TEMP = CYCLE(1)                                                   CBOX      6
      DO 2 I=2,LT                                                       CBOX      7
    2 CYCLE(I-1) = CYCLE(I)                                             CBOX      8
      CYCLE(LT) = TEMP                                                  CBOX      9
      NK = 0                                                            CBOX     10
    1 RETURN                                                            CBOX     11
      END                                                               CBOX     12
```

The above subroutine is taken from Llewellyn[4]

```
      SUBROUTINE CNVRT(TDN,E1,EG)                                       CNVRT     2
C                                                                       CNVRT     3
C     DEVELOPED BY M. SCHUETTE                                          CNVRT     4
C     THIS SUBROUTINE CONVERTS TDN TO NET ENERGY MAINTENANCE            CNVRT     5
C     AND NET ENERGY GAIN.          (SOURCE -- NRC)                     CNVRT     6
C                                                                       CNVRT     7
      REAL ME                                                           CNVRT     8
      ME = TDN*3.6155                                                   CNVRT     9
      FL = 2.2577 - 0.2213*ME                                           CNVRT    10
      F = 10.0**FL                                                      CNVRT    11
      EM = 77.0/F                                                       CNVRT    12
      EG = 2.54 - 0.031*F                                               CNVRT    13
      IF(EG.LT.0.15) EG = 0.15                                          CNVRT    14
      IF(EM.LT.0.25) EM = 0.25                                          CNVRT    15
      RETURN                                                            CNVRT    16
      END                                                               CNVRT    17
```

```
      SUBROUTINE CONSUM                                                 CONSUM     2
C                                                                       CONSUM     3
C     THIS SUBROUTINE COMPUTES THE ALLOCATION OF ROUGHAGE TO EACH COHORT CONSUM    4
C     USING STORED FEED ALLOCATIONS AND THE DISTRIBUTION OF COHORTS IN  CONSUM     5
C     LAND PARCELS.  THE TOTAL DIGESTIBLE NUTRIENTS OF THIS ALLOCATION  CONSUM     6
C     ALSO COMPUTED.  THE NUTRITIVE EFFECTS BOTH ON GROWTH AND ON       CONSUM     7
C     REPRODUCTION ARE DETERMINED BY THE CALL TO SUBROUTINE NUTRN.      CONSUM     8
C     FINALLY, THE REMOVAL RATES OF FORAGE AND FEED STOCKS ARE DETER-   CONSUM     9
C     MINED BY ACTUAL CONSUMPTION.                                      CONSUM    10
C                                                                       CONSUM    11
C-----THE FOLLOWING VARIABLES ARE USED....                              CONSUM    12
C                                                                       CONSUM    13
C        ACFEED(I,1) = TON QUANTITY OF CONCENTRATES PER HEAD PER DAY IN CONSUM    14
C                      COHORT I                                         CONSUM    15
C        ACFEED(I,2) = TON QUANTITY OF ROUGHAGE PER HEAD PER DAY IN     CONSUM    16
C                      COHORT I                                         CONSUM    17
C        AHR(I) = RATE OF ANIMAL HARVEST OF FORAGE FROM LAND PARCEL I   CONSUM    18
C        CNCAL(J) = CONCENTRATES ALLOCATION TO COHORT J IN TIME INCR.   CONSUM    19
C        CNCFRC(J,K) = FRACTION OF CONC. ALLOCATION TO COHORT J FROM    CONSUM    20
C                      STOCK K                                          CONSUM    21
C        DIGEST(I) = DIGESTIBILITY OF FORAGE IN LAND PARCEL I           CONSUM    22
C        FEDTON(J) = AVERAGE TON OF ROUGHAGES FED TO COHORT J           CONSUM    23
C        FEDGAL(J) = ROUGHAGE ALLOCATION TO COHORT J                    CONSUM    24
C        FORGAL(J) = FORAGE ALLOCATION AVAILABLE TO COHORT J            CONSUM    25
C        FORTON(J) = AVERAGE TON OF FORAGE AVAILABLE TO COHORT J        CONSUM    26
C        FQUAL(K) = AVERAGE TON VALUE OF STORED FEED STOCK K            CONSUM    27
C        FSTOCK(K) = QUANTITY ON HAND OF STORED FEED STOCK K            CONSUM    28
C        GRN(I) = QUANTITY OF FORAGE AVAILABLE IN LAND PARCEL I         CONSUM    29
C        POSTRB(I,J) = PROPORTION OF COHORT J POPULATION IN LAND AREA I CONSUM    30
C        RHGAL(J) = AMOUNT OF ROUGHAGE AVAILABLE TO COHORT J            CONSUM    31
C        RHGFRC(J,K) = FRACTION OF ROUGHAGE ALLOCATION TO COHORT J FROM CONSUM    32
C                      FEED STOCK K                                     CONSUM    33
C        SPLIT = FRACTION OF ROUGHAGE CONSUMED FROM FEED STOCK SOURCES  CONSUM    34
C        STKFED(K) = QUANTITY OF FEED STOCK K FED THIS TIME INCREMENT   CONSUM    35
C        TOMIC(J) = TOTAL CONCENTRATES CONSUMED BY COHORT J THIS TIME   CONSUM    36
C                   INCREMENT                                           CONSUM    37
C        TOMIR(J) = TOTAL ROUGHAGE CONSUMED BY COHORT J THIS TIME INCR. CONSUM    38
C        TONC(J) = COHORT J CONCENTRATE ALLOCATION FRACTION DIGESTIBLE  CONSUM    39
C        TONR(J) = COHORT J ROUGHAGE ALLOCATION FRACTION DIGESTIBLE     CONSUM    40
C                                                                       CONSUM    41
C-----END OF VARIABLE LIST                                              CONSUM    42
C                                                                       CONSUM    43
      COMMON/SYSVAR/T,DT,KK(9),KNOWS(9),SUBPOP(9,40),POP(9),ROUT(9),    CONSUM    44
     1              DELAY(9),DELAYP(9)                                  CONSUM    45
      COMMON/FIELD/NSTOCK,FSTOCK(20),STKFED(20),STKPUR(20),PRQUAL(20),  CONSUM    46
     1             SPOIL(20),STKLOS(20),FQUAL(20),FSCLOS(20),CPURCH(20), CONSUM    47
     2             CROP(20,2),CROPG(20),CFEED(20,2),CROPOL(20,2)        CONSUM    48
      COMMON/CNTROL/POSTRB(5,9),CNCAL(9),FEEDAL(9),RHGAL(9),CULFRC(10), CONSUM    49
     1              TONR(9),TONC(9),TOMIP(9),TOMIC(9),AHR(5),MHR(5),    CONSUM    50
     2              OLDMHR(5),RHGFRC(9,20),CNCFRC(9,20),ACFEED(9,2),    CONSUM    51
     3              SPLIT,DUR3(3),TBRD(7),TFRAC(10,2),ASELL(9),ADORT(9), CONSUM    52
     4              C1,C2,C3,C4,C5,C6,C8,C9,C10,C11,TMEAN,TCULL         CONSUM    53
      COMMON/EARTH/ DIGEST(5),GRN(5),LAND(5),NLANDS,SMZERO,SMZERO,      CONSUM    54
     1             STOCKL(5),ACPFOD(5)                                  CONSUM    55
      COMMON/DIRECT/CFINAL,REMDYL,FRCDDS(5),CATTIN(9,2,4),NALTER,       CONSUM    56
     1              AGEMIN,TMHR(5),REACTO(20),FPLANS(4),DISTFD(9,20,4)  CONSUM    57
      DIMENSION FORGAL(9),FORTON(9),FEDTON(9),TOT(9)                    CONSUM    58
      YEAR = T - INT(T+0.0001)                                          CONSUM    59
      DAYS = 365.0*DT                                                   CONSUM    60
C                                                                       CONSUM    61
C     FORAGE ALLOCATION AND DIGESTIBILITY COMPUTED                      CONSUM    62
C                                                                       CONSUM    63
      DO 40 ID=1,9                                                      CONSUM    64
      SUM1 = 0.0                                                        CONSUM    65
      AVGDIG = 0.0                                                      CONSUM    66
      DO 30 NA=1,NLANDS                                                 CONSUM    67
      TOTAL = 0.0                                                       CONSUM    68
      DO 20 IG=1,9                                                      CONSUM    69
      TOT(IG) = POSTRB(NA,IG)*POP(IG)                                   CONSUM    70
      TOTAL = TOTAL + TOT(IG)                                           CONSUM    71
   20 CONTINUE                                                          CONSUM    72
      IF(TOTAL.NE.0.0) GO TO 25                                         CONSUM    73
      AMNT = 0.0                                                        CONSUM    74
      GO TO 27                                                          CONSUM    75
   25 AMNT = GRN(NA)*TOT(ID)/TOTAL                                      CONSUM    76
   27 SUM1 = SUM1 + AMNT                                                CONSUM    77
      AVGDIG = AVGDIG + AMNT*DIGEST(NA)                                 CONSUM    78
   30 CONTINUE                                                          CONSUM    79
      FORGAL(ID) = SUM1                                                 CONSUM    80
      IF(SUM1.NE.0.0) GO TO 39                                          CONSUM    81
      FORTON(ID) = 0.0                                                  CONSUM    82
```

```
      GO TO 40
   39 FORTON(IB) = AVGDIG/SUM1
   40 CONTINUE
C
C     FEED ROUGHAGE AMOUNT AND DIGESTIBILITY COMPUTED
C
      DO 45 JL=1,NSTOCK
      STKFED(JL) = 0.0
   45 CONTINUE
      DO 60 IA=1,9
      IF(FEEDAL(IA).NE.0.0) GO TO 48
      FEDTON(IA) = 0.0
      GO TO 6
   48 FEDTON(IA) = ACFEED(IA,2)*POP(IA)*DAYS/FEEDAL(IA)
   60 CONTINUE
C
C     TOTAL ROUGHAGE FROM FEED AND FORAGE SOURCES
C
      DO 70 IB=1,9
      RHGAL(IB) = FEEDAL(IB) + FORGAL(IB)
      IF(RHGAL(IB).NE.0.0) GO TO 65
      TONR(IB) = 0.0
      GO TO 70
   65 FRAC = FEEDAL(IB)/RHGAL(IB)
      TONR(IB) = FEDTON(IB)*FRAC + FORTON(IB)*(1.0 - FRAC)
   70 CONTINUE
C
C     FEED CONCENTRATE AMOUNT AND DIGESTIBILITY COMPUTED
C
      DO 90 IC=1,9
      IF(CNCAL(IC).NE.0.0) GO TO 78
      TONC(IC) = 0.0
      GO TO 90
   78 TONC(IC) = ACFEED(IC,1)*POP(IC)*DAYS/CNCAL(IC)
   90 CONTINUE
C
C     FEED STOCKS CONSUMED BY CATTLE DETERMINED
C
      DO 97 NC=1,NSTOCK
      SUB1 = SUB2 = 0.0
      FQL = FQUAL(NC)
      IF(FSTOCK(NC).LE.0.0) FQL = PROUAL(NC)
      DO 94 IN=1,9
      SUB1 = SUB1 + POP(IN)*ACFEED(IN,1)*CNCFRC(IN,NC)/FQL
      SUB2 = SUB2 + POP(IN)*ACFEED(IN,2)*RHGFRC(IN,NC)/FQL
   94 CONTINUE
      STKFED(NC) = DAYS*(SUB1 + SUB2)
   97 CONTINUE
C**
      CALL NUTRN
C**
C
C     DETERMINATION OF ACTUAL FORAGE CONSUMPTION
C
      DAYS = 365.0*DT
      DO 110 NB=1,NLANDS
      SUM2= 0.0
      DO 100 IE=1,9
      FRAC = SPLIT
      IF(RHGAL(IE).EQ.FEEDAL(IE)) FRAC = 1.0
      SUM2 = SUM2 + POSTRO(NB,IE)*(TOMIR(IE) - FRAC*FEEDAL(IE))
  100 CONTINUE
      AHF(NB) = SUM2/DAYS
  110 CONTINUE
C
      RETURN
      END
```

```
SUBROUTINE COWCYC      73/73    OPT=1                          FTN 4.5+410          07/19/76 .17.40.45

      SUBROUTINE COWCYC                                                          COWCYC
C     VERSION AS OF 1/16/76                                                      COWCYC
C                                                                                COWCYC
C      THIS SUBROUTINE COMPUTES FEED INTAKE,WEIGHT CHANGES,                      COWCYC
C      CALVING AND ESTROUS CYCLING OF REPRODUCING COWS.                          COWCYC
C                                                                                COWCYC
      COMMON/SYSVAR/T,DT,KK(9),KNOWS(9),SUBPOP(9,40),POP(9),ROUT(9),             COWCYC
     1              DELAY(9),DELAYP(9)                                           COWCYC
      COMMON/CNTROL/POSTR3(5,9),CNCAL(9),FEEDAL(9),RHGAL(9),CULFRC(10),          COWCYC
     1              TONR(9),TONC(3),TDMIR(9),TDMIC(9),AHR(5),MHR(5),             COWCYC
     2              OLDMHR(5),RHGFRC(9,20),CNCFRC(9,20),ACFEED(9,2),             COWCYC
     3              SPLIT,DURB(3),TBRD(3),TFRAC(10,2),ASELL(9),ADDRT(9),         COWCYC
     4              C1,C2,C3,C4,C5,C6,C8,C9,C10,C11,TWEAN,TCULL                  COWCYC
      COMMON/HRDVAL/W(9,40),GRADE(9,40),WGTMAX(9),RIN(9,40),FATFAC,              COWCYC
     1              FMATUR(11),DGAIN(9,40),PAHATF(9),TWOLD,TYRLNG                COWCYC
      COMMON/ENERGY/TDNM,YMILK(7),SMM,DIFM,KM,TCVWN,CFE,CFD,ACDMIR(9),           COWCYC
     1              ACDMIC(9),FTDN(9),CTDN(9),WSM,WDIF,KW,WEANWT(2,16),          COWCYC
     2              RDI(13)                                                      COWCYC
      COMMON/REPROD/TDETH(2,16),DEST,GEST,TEST(3,40),BEGCAV,ENDCAV,              COWCYC
     1              INTCAV,DM,TEBC,CONCP(5),POPT(11),CPAT(3,40,13),              COWCYC
     2              CTIM(3,40,13),CFC,INB(3,40),NR(3),IFREG,LAC,                 COWCYC
     3              PCC(10,14),PCP(11),WF(10),ICOUNT(2,16),CSM,CDIF,             COWCYC
     4              KC,GGEST,PHC(2,16,13),HP(2,16,13),PT(2,16,13),ML,            COWCYC
     5              MAXHF(2),HFOUT,AFEST(3,40),WFEST(3,40),FEST(2,16),           COWCYC
     6              COWNEW(2,16),IZZY(2),SCNEW(2),OLDCP(3,13),MOMX               COWCYC
      DIMENSION XF(2),CCV(14)                                                    COWCYC
      DAYS = 365.0*DT                                                            COWCYC
      YEAR = T - INT(T + 0.0001)                                                 COWCYC
      DIFF = DT/2.                                                               COWCYC
      XF(1) = SUBPOP(1,1)/(SUBPOP(1,1)+SUBPOP(1,2))                              COWCYC
      XF(2) = SUBPOP(1,2)/(SUBPOP(1,1)+SUBPOP(1,2))                              COWCYC
      DO 1 LAX=1,14                                                              COWCYC
      CCV(LAX) = 0.0                                                             COWCYC
    1 CONTINUE                                                                   COWCYC
C                                                                                COWCYC
C      INITIALIZE PARAMETERS                                                     COWCYC
C                                                                                COWCYC
      SP = SC = 0.0                                                              COWCYC
      IF(POP(1) .LE. 0.0) GO TO 101                                              COWCYC
      HEIFC=SCNEW(1)+SCNEW(2)                                                    COWCYC
      IF((YEAR.LE.TBRD(1)-DIFF).OR.(YEAR.GT.TBRD(1)+DIFF)) GO TO 4               COWCYC
      N = 1                                                                      COWCYC
      CALL REPRO(N)                                                              COWCYC
      PRINT200,N                                                                 COWCYC
  200 FORMAT(5X,35HREPRO CALLED FROM COWCYC FOR COHORT,I3)                       COWCYC
    4 CONTINUE                                                                   COWCYC
      RHGPC=-HGAL(1)/POP(1)/DAYS                                                 COWCYC
      CNCPC=CNCAL(1)/POP(1)/DAYS                                                 COWCYC
      RCPC=-HGPC+CNCPC                                                           COWCYC
      RATIO=CNCPC/RCPC                                                           COWCYC
      K=KK(1)                                                                    COWCYC
C      COMPUTE DRY MATTER AND TDN(KGS) REQUIRED AND                              COWCYC
C      CONSUMED BY MATURE COWS.                                                  COWCYC
      DO 10 I=1,K                                                                COWCYC
      IP=I+1                                                                     COWCYC
      DGAIN(1,I) = 0.0                                                           COWCYC
      IF(SUBPOP(1,I) .LE. 0.0)GO TO 10                                           COWCYC
      IF(IPREG .LT. 2) GGEST = 0.0                                               COWCYC
      IF(IPREG .GT. 1) GGEST = 0.192                                             COWCYC
      SMLK=0.0                                                                   COWCYC
      SCPOP=0.0                                                                  COWCYC
      TTR = 0.0                                                                  COWCYC
      PCCV = 0.0                                                                 COWCYC
      CM = SUBPOP(1,I)                                                           COWCYC
      IF(LAC.EQ.0) GO TO 11                                                      COWCYC
C                                                                                COWCYC
C      COMPUTE TDN REQUIRED FOR MILK PRODUCTION.                                 COWCYC
C                                                                                COWCYC
      TMK = TEBC                                                                 COWCYC
      DO 10 IA=1,MOMX                                                            COWCYC
      J=IA                                                                       COWCYC
      AMLK=TABEXE(YMILK,SMM,DIFM,KM,TMK)                                         COWCYC
      IF((YEAR.GE.BEGCAV).AND.(YEAR.LE.ENDCAV)) 20,22                            COWCYC
   20 IF(I.GT.2) GO TO 22                                                        COWCYC
      CM = SUBPOP(1,I) - HEIFC*XF(I)                                             COWCYC
      HC = PCC(1,IA+1)*HEIFC*XF(I)                                               COWCYC
      CCOW=PCC(IP,IA+1)*CM                                                       COWCYC
```

```
SUBROUTINE COWCYC     73/73    OPT=1                          FTN 4.5+410        07/19/76 .17.40.45

      CPOP=HC*CCOW                                                              COWCYC     79
      SMLK=SMLK+(AMLK*HC*0.95)+(AMLK*CCOW)                                      COWCYC     80
      GO TO 23                                                                  COWCYC     81
   22 CPOP=PCC(I,IA+1)*SUBPOP(1,I)                                              COWCYC     82
      SMLK=SMLK+(AMLK*CPOP)                                                     COWCYC     83
   23 SCPOP=SCPOP+CPOP                                                          COWCYC     84
      TMK=T4K-(DM*FLOAT(J))                                                     COWCYC     85
   10 CONTINUE                                                                  COWCYC     86
      RTM = RTL = TTR = 0.0                                                     COWCYC     87
      IF((SCPOP.LE.0.0).AND.(SMLK.LE.0.0)) GO TO 11                             COWCYC     88
      AVMLK=SMLK/SCPOP                                                          COWCYC     89
      RTM=W(1,I)*.0148                                                          COWCYC     90
      RTL=AVMLK*.3041                                                           COWCYC     91
      TTR=RTM+RTL                                                               COWCYC     92
   11 PDNL = TABLIE(PDI,WSM,WDIF,KW,W(1,I))                                     COWCYC     93
      PDL = 0.275                                                               COWCYC     94
      PD = (PDNL*(SUBPOP(1,I) - SCPOP) + PDL*SCPOP)/SUBPOP(1,I)                 COWCYC     95
      DDMI = PD*W(1,I)                                                          COWCYC     96
      IF(DDMI.LE.RGPC) GO TO 6                                                  COWCYC     97
      DMIC = CNCPC                                                              COWCYC     98
      DMIR = RHGPC                                                              COWCYC     99
      GO TO 8                                                                   COWCYC    100
    6 DMIC = CNCPC                                                              COWCYC    101
      IF(DMIC.LE.DDMI) GO TO 7                                                  COWCYC    102
      DMIC = DDMI                                                               COWCYC    103
      DMIR = 0.0                                                                COWCYC    104
      GO TO 8                                                                   COWCYC    105
    7 DMIRUP = DDMI - DMIC                                                      COWCYC    106
      DMIR = AMIN1(DMIRUP,RHGPC)                                                COWCYC    107
    8 CONTINUE                                                                  COWCYC    108
      TAT = DMIC*TDNC(1) + DMIR*TDNR(1)                                         COWCYC    109
      GL=((TAT-TTR)/2.30)*SCPOP                                                 COWCYC    110
C                                                                               COWCYC    111
C     GAINS FROM PREGNANCY, GROWTH, AND CALVING                                 COWCYC    112
C                                                                               COWCYC    113
      RTM = W(1,I)*0.0001                                                       COWCYC    114
      OPOP=SUBPOP(1,I)-SCPOP                                                    COWCYC    115
      GO=((TAT-RTM)/1.10)*OPOP                                                  COWCYC    116
      IF((YEAR.GE.BEGCAV).AND.(YEAR.LE.ENDCAV)) 13,18                           COWCYC    117
   13 IF(I.GT.2) GO TO 16                                                       COWCYC    118
      OCP = CM*OLDCP(1,IP)                                                      COWCYC    119
      OHP = HEIFC*XF(I)*OLDCP(1,1) - SCPOP                                      COWCYC    120
      TOP = OHP + OCP                                                           COWCYC    121
      CPNEW = PCP(IP)*(SUBPOP(1,I) - TOP)                                       COWCYC    122
      GP = GGEST*(TOP + CPNEW)                                                  COWCYC    123
      DO 15 JQ=1,ML                                                             COWCYC    124
      CCV(JQ) = (PCC(1,JQ)*HEIFC*XF(I) + PCC(IP,JQ)*CM)/SUBPOP(1,I)             COWCYC    125
   15 CONTINUE                                                                  COWCYC    126
      TO=T+DT                                                                   COWCYC    127
      PCCV = TABLIE(CCV,CSM,CDIF,KC,TO)                                         COWCYC    128
      WLCV = (PCCV*SUBPOP(1,I)*GGEST*GEST)/DT                                   COWCYC    129
      GO TO 19                                                                  COWCYC    130
   16 OCP = SUBPOP(1,I)*OLDCP(1,I) - SCPOP                                      COWCYC    131
      CPNEW = (SUBPOP(1,I) - OCP)*PCP(IP)                                       COWCYC    132
      GP = GGEST*(OCP + CPNEW)                                                  COWCYC    133
      DO 17 IQ=1,ML                                                             COWCYC    134
   17 CCV(IQ)=PCC(I,IQ)                                                         COWCYC    135
      TO=T+DT                                                                   COWCYC    136
      PCCV = TABLIE(CCV,CSM,CDIF,KC,TO)                                         COWCYC    137
      WLCV=(PCCV*SUBPOP(1,I)*GGEST*GEST)/DT                                     COWCYC    138
      GO TO 19                                                                  COWCYC    139
   18 WLCV=0.0                                                                  COWCYC    140
      GP=GGEST*PCP(IP)*SUBPOP(1,I)                                              COWCYC    141
   19 CONTINUE                                                                  COWCYC    142
C                                                                               COWCYC    143
C      COMPUTE AVERAGE DAILY GAIN FOR SUBPOPULATION.                            COWCYC    144
C                                                                               COWCYC    145
      DGAIN(1,I)=(GL+GO+GP-WLCV)/SUBPOP(1,I)                                    COWCYC    146
C                                                                               COWCYC    147
C      COMPUTE TOTAL AND ACCUMULATED DRY MATTER, AND  TOTAL TDN                 COWCYC    148
C      INTAKES FOR COHORT 1.                                                    COWCYC    149
C                                                                               COWCYC    150
      SR=SR+(DMIR*DAYS*SUBPOP(1,I))                                             COWCYC    151
      SC=SC+(DMIC*DAYS*SUBPOP(1,I))                                             COWCYC    152
  100 CONTINUE                                                                  COWCYC    153
  101 CONTINUE                                                                  COWCYC    154
      TDMIR(1)=SR                                                               COWCYC    155
```

```
SUBROUTINE COWCYC      73/73    OPT=1                                    FTN 4.5+410          07/19/76 .17.40.45

                 TDMIC(1)=SC                                                                COWCYC     156
                 ACDMIR(1)=ACDMIR(1)+SR                                                     COWCYC     157
                 ACDMIC(1)=ACDMIC(1)+SC                                                     COWCYC     158
                 RTDN(1)=TDMIR(1)*TDNR(1)                                                   COWCYC     159
                 CTDN(1)=TDMIC(1)*TDNC(1)                                                   COWCYC     160
                 RETURN                                                                     COWCYC     161
                 END                                                                        COWCYC     162
```

```
      SUBROUTINE DDPLR(RINPUT,ROUT,RATES,PLR,DT,K,J,LIM1,LIM2)
C
C     A DISCRETE DELAY SUBROUTINE HAVING THESE FEATURES...
C        1. UNIFORM STORAGE LOSSES WITH PROPORTION PLR(ANNUAL BASIS)
C        2. MULTIPLE DELAY USE COMPATIBILITY
C
      DIMENSION RATES(LIM1,LIM2)
      DO 10 I=2,K
      RATES(J,I-1) = (1.0 - PLR*DT)*RATES(J,I)
   10 CONTINUE
      RATES(J,K) = RINPUT
      ROUT = RATES(J,1)
C
      RETURN
      END
```

```
      SUBROUTINE DLVDPL(RINPUT,ROUT,RATES,PLR,DEL,DELP,DT,K,J,LIM1,LIM2)
C
C     A DISTRIBUTED DELAY SUBROUTINE HAVING THESE FEATURES...
C        1. VARIABLE DELAY TIME
C        2. UNIFORM STORAGE LOSSES WITH PROPORTION PLR
C        3. MULTIPLE DELAY USE COMPATIBILITY
C     CAUTION ....USE THE FOLLOWING CRITETIA FOR THE MAXIMUM DT SIZE
C     TO INSURE NON-NEGATIVITY OF RATE VARIABLES
C
C     DT  LESS THAN  DEL/(2.*FK*(1.+(DEL*PLR/FK)+(DEL-DELP)/(FK*DT)))
C
      DIMENSION RATES(LIM1,LIM2)
      FK = FLOAT(K)
      B = 1.0 + (DEL-DELP)/(FK*DT) + PLR*DELP/FK
      A = FK*DT/DELP
      DELP = DEL
      KUP = K - 1
      DO 10 I=1,KUP
      RATES(J,I) = RATES(J,I) + A*(RATES(J,I+1)-B*RATES(J,I))
   10 CONTINUE
      RATES(J,K) = RATES(J,K) + A*(RINPUT-B*RATES(J,K))
      ROUT = RATES(J,1)
      RETURN
      END
```

```
      SUBROUTINE DVDPLR(RINPUT,ROUT,RATES,KMAX,KNOWS,DEL,DT,PLR,J,
     1LIM1,LIM2)
C
C     A DISCRETE DELAY SUBROUTINE WITH THESE FEATURES...
C        1. PROPORTIONAL LOSSES WITH ANNUAL RATE PLR
C        2. VARIABLE DELAY LENGTH UP TO KMAX TIMES DT
C        3. MULTIPLE DELAY USE COMPATIBILITY
C        4. INVERSE STAGE NUMBERING, IE. STAGE 1 IS THE NEXT OUTPUT RATE
C     NOTE...DIMENSION OF STORE MUST BE GREATER THAN OR EQUAL TO LIM2
C
      DIMENSION RATES(LIM1,LIM2),KNOWS(LIM1),STORE(40)
      KNEW = DEL/DT + 0.5
      IF(KNEW.GT.KMAX) KNEW = KMAX
      KNOW = KNOWS(J)
      NDIFF = KNEW - KNOW
      A = 1.0 - PLR*DT
      IF(NDIFF.GT.0) GO TO 5
      IF(NDIFF.LT.0) GO TO 15
C        THE DELAY LENGTH IS UNCHANGED
      DO 3 IC=2,KNOW
      RATES(J,IC-1) = A*RATES(J,IC)
    3 CONTINUE
      RATES(J,KNOW) = RINPUT
      ROUT = RATES(J,1)
      GO TO 35
C        THE DELAY LENGTH HAS INCREASED
    5 ROUT = 0.0
      DO 6 IK=1,KNOW
      STORE(IK) = RATES(J,IK)
    6 CONTINUE
      DO 7 IB=1,KNOW
      RATES(J,NDIFF+IB-1) = A*STORE(IB)
    7 CONTINUE
      NHIGH = NDIFF-1
      DO 10 IA=1,NHIGH
      RATES(J,IA) = 0.0
   10 CONTINUE
      RATES(J,KNEW) = RINPUT
      GO TO 35
C        THE DELAY LENGTH HAS DECREASED
   15 NUP = -NDIFF + 1
      ROUT = 0.0
      DO 20 ID=1,NUP
      ROUT = ROUT + RATES(J,ID)
   20 CONTINUE
      NLOW = NUP + 1
      DO 25 IE=NLOW,KNOW
      RATES(J,IE-NUP) = A*RATES(J,IE)
   25 CONTINUE
      RATES(J,KNEW) = RINPUT
      MNDIFF = -NDIFF
      DO 30 IF=1,MNDIFF
      RATES(J,KNEW+IF) = 0.0
   30 CONTINUE
C        ADJUSTING THE NUMBER OF STAGES INDEX FOR THE NEXT USE
   35 KNOWS(J) = KNEW
      RETURN
      END
```

```
      SUBROUTINE EXOG(T,DT,ISTART)
C
C     THIS SUBROUTINE DETERMINES THE CORRECT VALUE OF ALL EXOGENOUS
C     VARIABLES FOR THIS TIME PERIOD.
C
C-----THE FOLLOWING VARIABLES ARE USED....
C
C        SOLAR = AVERAGE DAILY SOLAR RADIATION IN LANGLEYS
C        AVGTMP = AVERAGE DAILY TEMPERATURE IN DEG. C
C        APRICE(K) = PRICE OF CATTLE OF GRADE K
C        BPRICE(L) = PRICE PER UNIT QUANTITY OF RESORC L
C        CPRICE(N) = CPRICE PER UNIT OF CROP N
C        CROP(I,1) = CURRENT VALUE OF CROP I HARVESTED THIS PERIOD
C        CROP(I,2) = AMOUNT OF CROP I RESIDUE HARVESTED THIS PERIOD
C        CROPG(I) = TOTAL AMOUNT OF CROP I HARVESTED THIS YEAR
C        CROPOL(I,1) = TON VALUE OF THE CURRENTLY PRODUCED CROP
C        CROPOL(I,2) = TON VALUE OF THE CURRENTLY PRODUCED CROP RESIDUE
C        RAIN = AVERAGE DAILY RAIN IN CM
C
C-----END OF VARIABLE LIST
C
      COMMON/SOURCE/READIN(20,3),READC1(20,10),READC2(20,10),
     2              NPOINT,GAP,READC3(20,10),READC4(20,10)
      COMMON/WEATHR/SOLAR,AVGTMP,RAIN
      COMMON/FIELD/NSTOCK,FSTOCK(20),STKFED(20),STKPUR(20),PRQUAL(20),
     1             SPOIL(20),STKLOS(20),FQUAL(20),FRCLOS(20),CPURCH(20),
     2             CROP(20,2),CROPG(20),CFEED(20,2),CROPOL(20,2)
      COMMON/PRICES/APRICE(8),BPRICE(8),CPRICE(20)
      COMMON/MATERL/RESORC(10),NRSORC,DWHEAD,DEFLAT,SPBRED,SPVACC,
     1              HRQALV,HRFED1,HRFED2,HRBRED,HRVACC,HRMEAN,HRCULL,
     2              HRMAST,HRSFED,HRFERT,HRHARV,HRECIP,HRFCAP,HRMAIN,
     3              SPUTL1,SPUTL2,SPUTL3,SPUTL4,SPUTL5,SPSEED,SPFERT,
     4              SPREP1,SPREP2,SPREP3,HLEASE
      COMMON/SAVER2/TAXINC,TAXLIB,TSPACE(20),NSTRT1,NSTRT2,NSTRT3,NSTRT4
     1              ,DENOM,TAGHST,TAFEED,HCAPT,NSTRT5,NSTRT6
      COMMON/EXPECT/APFUTR(5,20),APPAST(5,5),CPFUTR(20,10),CPPAST(20,5)
     1              ,BPFUTR(8,10),BPPAST(8,5)
      DIMENSION VAL(20)
      IF(ISTART.NE.1) GO TO 4
      TSPACE(1) = GAP
      DO 2 IT=2,20
      TSPACE(IT) = TSPACE(IT-1) + GAP
    2 CONTINUE
      ISTART = 2
    4 CONTINUE
      YEAR = T - INT(T+0.001)
      DO 6 NN=1,20
      VAL(NN) = 0.0
    6 CONTINUE
C
C     DETERMINING CURRENT PRICES
C
      DO 10 LA=1,5
      APRICE(LA) = XPECTA(LA,T)
   10 CONTINUE
      DO 15 LB=1,8
      BPRICE(LB) = XPECTB(LB,T)
   15 CONTINUE
      DO 20 LC=1,NSTOCK
      CPRICE(LC) = XPECTC(LC,T)
   20 CONTINUE
C
C     DETERMINING THE CURRENT VALUE OF WEATHER VARIABLES
C
      YS = YEAR
      IF(YEAR.LT.DT/2.) YS = 0.999
      DO 23 ND=1,NPOINT
      VAL(ND) = READIN(ND,1)
   23 CONTINUE
      SOLAR = TABLIE(VAL,0.0,GAP,NPOINT-1,YS)
      DO 26 NE=1,NPOINT
      VAL(NE) = READIN(NE,2)
   26 CONTINUE
      AVGTMP = TABLIE(VAL,0.0,GAP,NPOINT-1,YS)
      DO 29 NF=1,NPOINT
      VAL(NF) = READIN(NF,3)
   29 CONTINUE
      RAIN = TABLIE(VAL,0.0,GAP,NPOINT-1,YS)
C
C     DETERMINING THE CURRENT CROP PRODUCTION
C
```

```
      DO 50 IA=1,NSTOCK                                                 EXOG      83
      NINCR = 0                                                         EXOG      84
      DO 40 NP=1,20                                                     EXOG      85
      IF(ABS(YEAR - TSPACE(NP)).LT.DT/2.) NINCR = NP                    EXOG      86
   40 CONTINUE                                                          EXOG      87
      IF(ABS(YEAR).LT.DT/2.) NINCR =20                                  EXOG      88
      IF(NINCR.EQ.0) GO TO  50                                          EXOG      89
      A = CROP(IA,1)                                                    EXOG      90
      C = CROP(IA,2)                                                    EXOG      91
      B = CROPOL(IA,1)                                                  EXOG      92
      D = CROPOL(IA,2)                                                  EXOG      93
      W = READ01(NINCR,IA)                                              EXOG      94
      X = READ02(NINCR,IA)                                              EXOG      95
      Y = READ03(NINCR,IA)                                              EXOG      96
      Z = READ04(NINCR,IA)                                              EXOG      97
      CROP(IA,1) = A + W                                                EXOG      98
      IF(CROP(IA,1).LT.1.0) GO TO 42                                    EXOG      99
      CROPOL(IA,1) = (A*B + W*Y)/CROP(IA,1)                             EXOG     100
   42 CONTINUE                                                          EXOG     101
      CROP(IA,2) = C + X                                                EXOG     102
      IF(CROP(IA,2).LT.1.0) GO TO 44                                    EXOG     103
      CROPOL(IA,2) = (C*D + X*Z)/CROP(IA,2)                             EXOG     104
   44 CONTINUE                                                          EXOG     105
   50 CONTINUE                                                          EXOG     106
      RETURN                                                            EXOG     107
      END                                                               EXOG     108
```

```
      SUBROUTINE FEEDS                                                  FEEDS      2
C                                                                       FEEDS      3
C     THIS SUBROUTINE MAINTAINS CURRENT FEED STOCK QUANTITIES BY AC-    FEEDS      4
C     COUNTING FOR FEEDING TO LIVESTOCK,PURCHASES,SALES,AND LOSSES.     FEEDS      5
C     THE QUALITIY OF THE FEED STOCK IN TERMS OF A TON VALUE IS ALSO    FEEDS      6
C     DETERMINED.                                                       FEEDS      7
C                                                                       FEEDS      8
C-----THE FOLLOWING VARIABLES ARE USED....                              FEEDS      9
C                                                                       FEEDS     10
C        CROPQL(N,1) = TON VALUE OF CROP N HARVESTED                    FEEDS     11
C        CROPQL(N,2) = TON VALUE OF CROP N RESIDUE HARVESTED            FEEDS     12
C        CROPG(N) = TOTAL QUANTITY OF FEED STOCK N GROWN THIS YEAR      FEEDS     13
C        CSALES(K) = AMOUNT OF FEED STOCK K SOLD THIS TIME INCREMENT    FEEDS     14
C        FRCLOS(K) = ANNUAL FRACTION OF FEED STOCK K LOST               FEEDS     15
C        FSTOCK(K)  = QUANTITY OF FEED STOCK K ON HAND                  FEEDS     16
C        PRQUAL(K) = TON VALUE OF PURCHASED FEED STOCK K                FEEDS     17
C        SDOIL(K)  = ANNUAL RATE OF FEED STOCK K QUALITY DETERIORATION  FEEDS     18
C        STKFED(K) = AMOUNT OF FEED STOCK K FED TO LIVESTOCK THIS INCR. FEEDS     19
C        STKLOS(K) = AMOUNT OF FEED STOCK K LOST THIS TIME INCREMENT    FEEDS     20
C        STKPUR(K) = AMOUNT OF FEED STOCK K PURCHASED THIS INCREMENT    FEEDS     21
C                                                                       FEEDS     22
C-----END OF VARIABLE LIST                                              FEEDS     23
C                                                                       FEEDS     24
      COMMON/SYSVAR/T,DT,KK(9),KNOWS(9),SUBPOP(9,40),POP(9),ROUT(9),    FEEDS     25
     1              DELAY(9),DELAYP(9)                                  FEEDS     26
      COMMON/FIELD/NSTOCK,FSTOCK(20),STKFED(20),STKPUR(20),PRQUAL(20),  FEEDS     27
     1              SDOIL(20),STKLOS(20),FQUAL(20),FRCLOS(20),CPURCH(20), FEEDS     28
     2              CROP(20,2),CROPG(20),CFEED(20,2),CROPQL(20,2)       FEEDS     29
      COMMON/MONEY/ASALES(15),CSALES(20),AREV(15),CREV(21),CASH(25),    FEEDS     30
     1              TAXRP(15),TANP(15),TAXES(15),TAGRPD(15),TANPD(15),  FEEDS     31
     2              TAXESD(15),NACOST,NCCOST,CAPTL(5),TACASH(15),       FEEDS     32
     3              LVALUE,LIFE,ANREV(15),AREVD(15),ANCOST(15),         FEEDS     33
     4              ACOST(21),ACOSTD(15),CCOST(21),TACSHD(15),          FEEDS     34
     5              ASOLD(15),CSOLD(21),SALES,DEBTD                     FEEDS     35
C                                                                       FEEDS     36
      DO 20 IA=1,NSTOCK                                                 FEEDS     37
      FQNOLD = FSTOCK(IA) - STKFED(IA) - CSALES(IA) - STKLOS(IA)        FEEDS     38
      FSTOCK(IA) = FQNOLD + STKPUR(IA) + CROP(IA,1) + CROP(IA,2)        FEEDS     39
      FQUAL(IA) = FQUAL(IA)*(1.0 - SDOIL(IA)*DT)                        FEEDS     40
      B = STKPUR(IA)*PRQUAL(IA)                                         FEEDS     41
      C = CROP(IA,1)*CROPQL(IA,1) + CROP(IA,2)*CROPQL(IA,2)             FEEDS     42
      IF(FSTOCK(IA).NE.0.0) GO TO 19                                    FEEDS     43
      FQUAL(IA) = 0.0                                                   FEEDS     44
      GO TO 20                                                          FEEDS     45
   19 FQUAL(IA) = (FQNOLD*FQUAL(IA) + B + C)/FSTOCK(IA)                 FEEDS     46
   20 CONTINUE                                                          FEEDS     47
C                                                                       FEEDS     48
C     SETTING UP FEED STOCK CHANGE VARIABLES FOR THE NEXT DT STEP       FEEDS     49
C                                                                       FEEDS     50
      DO 25 IC=1,NSTOCK                                                 FEEDS     51
      CPURCH(IC) = CPURCH(IC) + STKPUR(IC)                              FEEDS     52
      CFEED(IC,1) = CFEED(IC,1) + STKFED(IC)                            FEEDS     53
   25 CONTINUE                                                          FEEDS     54
      DO 30 IB=1,NSTOCK                                                 FEEDS     55
      STKLOS(IB) = FRCLOS(IB)*DT*FSTOCK(IB)                             FEEDS     56
      STKFED(IB) = 0.0                                                  FEEDS     57
      CSALES(IB) = 0.0                                                  FEEDS     58
      STKPUR(IB) = 0.0                                                  FEEDS     59
      CROPG(IB) = CROPG(IB) + CROP(IB,1)                                FEEDS     60
   30 CONTINUE                                                          FEEDS     61
C                                                                       FEEDS     62
      RETURN                                                            FEEDS     63
      END                                                               FEEDS     64
```

```
      SUBROUTINE FINANC
C
C     VERSION AS OF APRIL 28, 1975
C     THIS SUBROUTINE HANDLES ALL MONETARY TRANSACTIONS AND ANALYSIS
C     BOTH DURING THE SIMULATION RUN AND AT THE CONCLUSION OF THE
C     PROJECT.
C
C     SUBROUTINE REVENU IS CALLED TO COMPUTE ALL INCOMING REVENUE FROM
C     SALES OF BEEF CATTLE OR CROP PRODUCTION.
C     THE FOLLOWING KEY VARIABLES ARE COMPUTED BY REVENU....
C        AREV(11) = TOTAL REVENUE FROM ANIMAL SALES THIS TIME INTERVAL
C        CREV(NCROPS+1) = TOTAL CROP SALES REVENUE THIS INTERVAL
C
C     SUBROUTINE PRCOST IS CALLED TO COMPUTE ALL PRODUCTION COSTS
C     ASSOCIATED WITH ANIMAL AND CROP PRODUCTION, MARKETING, AND
C     TRANSPORTATION.
C     THE FOLLOWING KEY VARIABLES ARE COMPUTED BY PRCOST....
C        ACOST(NACOST+1) = TOTAL COST OF ANIMAL PRODUCTION THIS PERIOD
C        CCOST(NCCOST+1) = THE TOTAL COST OF CROP PRODUCTION THIS PERIOD
C
C     SUBROUTINE CAPTAL IS CALLED TO COMPUTE INTEREST PAYMENTS AND
C     REPAYMENT OF PRINCIPAL AS FUNCTIONS OF CURRENT INDEBTEDNESS.
C     THE FOLLOWING KEY VARIABLES ARE COMPUTED BY CAPTAL....
C        CAPTL(4) = DEPRECIATION TAKEN IN THIS TIME INTERVAL
C        CAPTL(5) = SUM OF INTEREST AND PRINCIPAL PAYMENTS THIS PERIOD
C
      COMMON/SYSVAR/T,DT,KK(9),KNOWS(9),SUBPOP(9,40),POP(9),ROUT(9),
     1              DELAY(9),DELAYP(9)
      COMMON/MONEY/ASALES(10),CSALES(20),AREV(10),CREV(21),CASH(26),
     1              TAGRP(15),TANP(15),TAXES(15),TAGRPD(15),TANPD(15),
     2              TAXESD(15),NACOST,NCCOST,CAPTL(5),TACASH(15),
     3              LVALUE,LIFE,ANREV(15),AREVD(15),ANCOST(15),
     4              ACOST(21),ACOSTD(15),CCOST(21),TACSHD(15),
     5              ACOLD(10),CSOLD(20),SALES,DEBT
      COMMON/BLOCK/DETPRT,DETPRT,BEGPRT,PRTCHG,PRTVL1,PRTVL2,DUR,
     1              PLR(9),DS(9),PGRAIN(9),TSPRNG,TFALL,WLENGH
      COMMON/FIELD/NSTOCK,FSTOCK(20),STKFED(20),STKPUR(20),PRQUAL(20),
     1              SPOIL(20),STKLOS(20),FQUAL(20),FRCLOS(20),CPURCH(20),
     2              CROP(20,2),CROPG(20),CFEED(20,2),CRUPCL(20,2)
      COMMON/SAVER1/TAXINC,TAXLIB,TSPACE(20),NSTRT1,NSTRT2,NSTRT3,NSTRT4
     1              ,DEPCOM,TAGRPT,TANPD,TAXESD,NCAPT,NSTRT5,NSTRT6
      COMMON/PRINTS/PRV(3,15),NAME(6,2),COMDRT(9,2),DISC(9),CNAME(20,2),
     1              TANREV,TCREEV,DCOUNT,DASSET
      COMMON/SAVER5/SDEDT,SDEDTR,SPEPAY,BLOAN,PROTAX,SDEBTC,PRODUC(9)
      NCROPS = NSTOCK
C
C***  COMPUTATION OF REVENUE AND COSTS FOR THIS INTERVAL
C
      CALL REVENU
      CALL CAPTAL
      CALL PRCOST
C
C***  ACCOUNTING OPERATIONS FOR REVENUE AND COSTS
C
C     PART 1....DISCOUNTING FACTORS AND ZEROING ANNUAL TOTALS
C
      YEAR = T - INT(T+1.0E-16)
      ANDFAC = 1.0/((1.0 + DI*DCOUNT)**(YEAR/DT))
      MPER = INT((YEAR + 1.0E-06)/DT)
      IF(YEAR.LT.DT/2.) MPER = (1.0/DT) + 1.5
      MTPER = (1.0/DT) + 0.5
      MYEAR = INT(T+1.0E-DT)
      MYHOP = INT(DUR+0.5)
      IF(ABS(YEAR-DT).GT.DT/2.) GO TO 120
      TAGRP(MYEAR) = TAGRPD(MYEAR) = 0.0
      TANP(MYEAR) = TANPD(MYEAR) = 0.0
      TAXES(MYEAR) = TAXESD(MYEAR) = 0.0
      TACASH(MYEAR) = TACSHD(MYEAR) = 0.0
      ANREV(MYEAR) = AREVD(MYEAR) = 0.0
      ANCOST(MYEAR) = ACOSTD(MYEAR) = 0.0
      DO 110 M=1,MTPER
      CASH(M) = 0.0
  110 CONTINUE
      DO 115 LA=1,NACOST
      PRODUC(LA) = 0.0
  115 CONTINUE
  120 CONTINUE
C
C     PART 2....THE CURRENT TIME INTERVAL
C
```

```
      TREV = AREV(10) + CREV(21)                                        FINANC     83
      TCOST = ACOST(NACOST + 1) + CCOST(NCCOST + 1) + CAPTL(5)           FINANC     84
      TPGRP = TREV - TCOST                                              FINANC     85
C*                                                                      FINANC     86
      CALL TAXSUB(TPGRP,TAX,CAPTL(4))                                   FINANC     87
C*                                                                      FINANC     88
      CASH(MPER) = TPGRP - TAX                                          FINANC     89
      TPNP = CASH(MPER) - CAPTL(4)                                      FINANC     90
      WCAPT = WCAPT + CASH(MPER) + SLOAN                                FINANC     91
      SLOAN = 0.0                                                       FINANC     92
      DO 140 LB=1,NACOST                                                FINANC     93
      PRODUC(LB) = PRODUC(LB) + ACOST(LB)                               FINANC     94
  140 CONTINUE                                                          FINANC     95
C                                                                       FINANC     96
C     PART 3....YEARLY TOTALS AND YEARLY DISCOUNTED TOTALS              FINANC     97
C                                                                       FINANC     98
      ANREV(MYEAR) = ANREV(MYEAR) + TREV                                FINANC     99
      ANCOST(MYEAR) = ANCOST(MYEAR) + TCOST                             FINANC    100
      TAGRP(MYEAR) = TAGRP(MYEAR) + TPGRP                               FINANC    101
      TANP(MYEAR) = TANP(MYEAR) + TPNP                                  FINANC    102
      TAXES(MYEAR) = TAXES(MYEAR) + TAX                                 FINANC    103
      TACASH(MYEAR) = TACASH(MYEAR) + CASH(MPER)                        FINANC    104
      AREVD(MYEAR) = AREVD(MYEAR) + TREV*ANDFAC                         FINANC    105
      ACOSTD(MYEAR) = ACOSTD(MYEAR) + TCOST*ANDFAC                      FINANC    106
      TAGRPD(MYEAR) = TAGRPD(MYEAR) + TPGRP*ANDFAC                      FINANC    107
      TANPD(MYEAR) = TANPD(MYEAR) + TPNP*ANDFAC                         FINANC    108
      TAXESD(MYEAR) = TAXESD(MYEAR) + TAX*ANDFAC                        FINANC    109
      TACSHD(MYEAR) = TACSHD(MYEAR) + CASH(MPER)*ANDFAC                 FINANC    110
C                                                                       FINANC    111
      RETURN                                                            FINANC    112
      END                                                               FINANC    113
```

```
      SUBROUTINE FORAGE                                                 FORAGE      2
C     THIS SUBROUTINE MODELS THE GROWTH OF FORAGE MATERIAL AND THE      FORAGE      3
C     INTERACTION OF GRAZING BEEF CATTLE AND FORAGE PRODUCTION.         FORAGE      4
C-----THE FOLLOWING VARIABLES ARE USED....                              FORAGE      5
C                                                                       FORAGE      6
C        ACPROD(I) = ACCUMULATED FORAGE GROWTH TO DATE IN PARCEL I      FORAGE      7
C        ADGDAY = ACCUMULATED DEGREE DAYS ABOVE THE BASE TEMPERATURE    FORAGE      8
C        AHR(I) = ANIMAL HARVEST RATE FOR LAND PARCEL I                 FORAGE      9
C        AVGTMP = AVERAGE TEMPERATURE OVER A TIME INCREMENT             FORAGE     10
C        AWF = ANIMAL WASTAGE FACTOR                                    FORAGE     11
C        DIGEST(I) = AVERAGE DIGESTIBILITY OF FORAGE IN LAND PARCEL I   FORAGE     12
C        EVAP = EVAPORATION OF SOIL MOISTURE                            FORAGE     13
C        GRN(I) = STOCK OF FORAGE MATERIAL IN LAND PARCEL I             FORAGE     14
C        LAND(I) = AREA OF LAND IN LAND PARCEL I UNDER HOMOGENEOUS TRMT. FORAGE     15
C        MHR(I) = MECHANICAL HARVEST RATE FOR LAND PARCEL I             FORAGE     16
C        MWF = MECHANICAL HARVEST WASTAGE FACTOR                        FORAGE     17
C        NLANDS = NUMBER OF LAND PARCELS                                FORAGE     18
C        PERCOL = RATE OF PERCOLATION OF WATER OUT OF ROOT DEPTH        FORAGE     19
C        RAIN = RAINFALL IN A TIME INCREMENT                            FORAGE     20
C        SM = SOIL MOISTURE TO ROOT DEPTH                               FORAGE     21
C        SNUT = SOIL NUTRIENT TO ROOT DEPTH                             FORAGE     22
C        STOCKL(I) = STOCKING RATE IN LAND PARCEL I                     FORAGE     23
C                                                                       FORAGE     24
C-----END OF VARIABLE LIST                                              FORAGE     25
C                                                                       FORAGE     26
      COMMON/BLOCK/DETPRT,SE.PRT,BEGPRT,PRTCHG,PRTVL1,PRTVL2,DUR,       FORAGE     27
     1            PLR(9),DR(9),PGRADE(9),TSPRNG,TFALL,WLENGH            FORAGE     28
      COMMON/SYSVAR/T,DT,KK(9),KNOWS(9),SUBPOP(9,43),POP(9),ROUT(9),    FORAGE     29
     1            DELAY(9),DELAYP(9)                                    FORAGE     30
      COMMON/WEATHR/SOLAR,AVGTMP,RAIN                                   FORAGE     31
      COMMON/CNTROL/POSTRB(5,9),CNCAL(9),FEECAL(9),RHGAL(9),CULFRC(10), FORAGE     32
     1            TDIR(9),TDNC(9),TDMIR(9),TDMIC(9),AHR(5),MHR(3),      FORAGE     33
     2            OLDMHR(5),RHGFRC(9,20),CNCFRC(9,20),ACFEED(9,2),      FORAGE     34
     3            SPLIT,DURB(3),TFED(3),TFEAC(10,2),ASELL(9),ADORT(9),  FORAGE     35
     4            C1,C2,C3,C4,C5,C6,C8,C9,C10,C11,TWEAN,TCULL           FORAGE     36
      COMMON/EARTH/ DIGEST(5),GRN(5),LAND(5),NLANDS,SNZERO,SMZERO,      FORAGE     37
     1            STOCKL(5),ACPROD(5)                                   FORAGE     38
      COMMON/FRDATA/BTEMP,MWF,BDGEST(10),MSTOCK(6),QUALTY(11),TEMP(10), FORAGE     39
     1            SWATER(10),WASTEF(6),SOILNT(11)                       FORAGE     40
      COMMON/SAVER3/ROOT(5),SUMTPF,ADGDAY,SM,SNUT(5),GR(5),ROOTDT(5),   FORAGE     41
     1            P(5)                                                  FORAGE     42
      COMMON/MATERL/RESORC(10),NRSORC,OVHEAD,DEFLAT,SPBRED,SPVACC,      FORAGE     43
     1            HRCALV,HRFED1,HRFED2,HRBRED,HRVACC,HRWEAN,HRCULL,     FORAGE     44
     2            HRCAST,HRSEED,HRFERT,HRHARV,HREQIP,HRFCAP,HRMAIN,     FORAGE     45
     3            SPUTL1,SPUTL2,SPUTL3,SPUTL4,SPUTL5,SPSEED,SPFERT,     FORAGE     46
     4            SPREP1,SPREP2,SPREP3,HLEASE                           FORAGE     47
      DIMENSION PRODOT(5),GRNDOT(5)                                     FORAGE     48
      DIMENSION DENVAL(7)                                               FORAGE     49
      REAL LAND,MHR,MWF,MSTOCK                                          FORAGE     50
      DATA PAR1,PAR2,PAR3,PAR4,PAR5,PAR6/0.10,400.0,0.10,0.15,.0003,15./ FORAGE     51
      DATA DENVAL/.95,.65,.40,0.95,1.00,1.00,1.00/                      FORAGE     52
C                                                                       FORAGE     53
C     DATA UPON WHICH THIS EMPIRICAL MODEL BASED                        FORAGE     54
C                                                                       FORAGE     55
C                                                                       FORAGE     56
C     INITIALIZATION FOR FIRST CALL TO GRAZE OF THIS SEASON             FORAGE     57
C                                                                       FORAGE     58
      YEAR = T - INT(T)                                                 FORAGE     59
      DIFF = DT/2.                                                      FORAGE     60
      DAYS = 365.0*DT                                                   FORAGE     61
      ALPHA = 0.0012                                                    FORAGE     62
      BETA = -0.003                                                     FORAGE     63
      PERCOL = 0.0                                                      FORAGE     64
      PHOMAX = 0.0004                                                   FORAGE     65
      IF(YEAR.LT.TSPRNG-DIFF) GO TO 250                                 FORAGE     66
      IF(YEAR.GT.TFALL + DIFF) GO TO 250                                FORAGE     67
      IF(ABS(YEAR-TSPRNG).GT.DIFF) GO TO 100                            FORAGE     68
      ADGDAY = 0.0                                                      FORAGE     69
      SUMTPF = 0.0                                                      FORAGE     70
      SM = SMZERO                                                       FORAGE     71
      DO 20 NC=1,NLANDS                                                 FORAGE     72
      SNUT(NC) = SNZERO + SPFERT                                        FORAGE     73
   20 CONTINUE                                                          FORAGE     74
      TPF = TABLIE(TEMP,0.0,3.0,9,AVGTMP)                               FORAGE     75
      SMF = TABLIE(SWATER,0.0,2.0,9,SM)                                 FORAGE     76
C                                                                       FORAGE     77
      DO 90 IA=1,NLANDS                                                 FORAGE     78
      GRN(IA) = 300.                                                    FORAGE     79
      ROOT(IA) = 100.                                                   FORAGE     80
      SNF = TABLIE(SOILNT,0.1,10.0,1 ,SNUT(IA))                         FORAGE     81
                                                                        FORAGE     82
```

```
      PHOTO=   GRN(IA)*PHOMAX*SOLAR*AMIN1(TPF,SMF,SNF)
      P(IA) = PHOTO
      F = PAR1*ROOT(IA)*EXP(-GRN(IA)/PAR2)
      ZX3 = PAR3 + PAR4*(1.0 - EXP(-PAR5*GRN(IA)))
      GR(IA) = F + PHOTO*(1.0 - ZX3)
      ROOTDT(IA) = PHOTO*ZX3 - F
      AHR(IA) = 0.0
      GRN(IA) = 500.*LAND(IA)
      ACPROD(IA) = GRN(IA)
   90 CONTINUE
C
C     COMPUTING THE CORRECT FORAGE STOCKS REMAINING
C
  100 CONTINUE
      DO 200 IB=1,NLANDS
      AWF = TABLE(WASTEF,MSTOCK,STOCKL(IB),5)
      PRODOT(IB) = GP(IB)*LAND(IB)
      GRNDOT(IB) = PRODOT(IB) - AWF*AHR(IB) - MWF*OLDMHR(IB)
      ACPROD(IB) = ACPROD(IB) + DAYS*PRODOT(IB)
      ROOT(IB) = ROOT(IB) + ROOTDT(IB)*DAYS
      IF(ROOT(IB).GE.0.0) GO TO 180
      ROOT(IB) = 0.0
  180 CONTINUE
      GRN(IB) = GRN(IB) + DAYS*GRNDOT(IB)
      IF(GRN(IB).GE.0.0) GO TO 200
      GRN(IB) = 0.0
  200 CONTINUE
C
C     FORAGE PRODUCTION RATE
C
      TPF = TABLE(TEMP,0.0,5.0,9,AVGTMP)
      SUMTPF = SUMTPF + TPF*DAYS
      ADDDAY = ADDDAY + DAYS*(AVGTMP - BTEMP)
      EVAP = ALPHA*AVGTMP*AVGTMP
      PERC = PERCOL*(1.0 - EXP(-SM/PAR6))
      SMDOT = RAIN - EVAP - PERC
      SM = SM + DAYS*SMDOT
      IF(SM.GE.0.0) GO TO 210
      SM = 0.0
  210 IF(SM.LE.25.0) GO TO 215
      SM = 25.0
  215 CONTINUE
      SMF = TABLE(SWATER,0.0,2.0,9,SM)
      DO 217 NG=1,NLANDS
      SNTDOT = BETA*P(NG)
      SNUT(NG) = SNUT(NG) + SNTDOT*DAYS
      IF(SNUT(NG).LT.0.0) SNUT(NG) = 0.0
  217 CONTINUE
      DO 220 IG=1,NLANDS
      SNF = TABLE(SOILNT,0.1,10.0,1.,SNUT(IG))
      DENSE = GRN(IG)/LAND(IG)
      ACTIVE = AMIN1(DENSE,1000.0)
      PHOTO =  ACTIVE*PHOMAX*SOLAR*AMIN1(TPF,SMF,SNF)
      P(IG) = PHOTO
      F = PAR1*ROOT(IG)*EXP(-GRN(IG)/(PAR2*LAND(IG)))
      ZX3 = PAR3 + PAR4*(1.0 - EXP(-PAR5*GRN(IG)/LAND(IG)))
      GR(IG) = F + PHOTO*(1.0 - ZX3)
      ROOTDT(IG) = PHOTO*ZX3 - F
  220 CONTINUE
C
C     THE FORAGE DIGESTIBILITY IN ALL DISTINCT AREAS
C
      DO 230 IC=1,NLANDS
      IF(GR(IC).LE.0.0) GO TO 224
      PINDEX = GRN(IC)/(GR(IC)*LAND(IC))
      IF(STOCKL(IC).GT.0.0) GO TO 222
      GRNDEN = 50.0
      GO TO 223
  222 CONTINUE
      GRNDEN = GRN(IC)/(STOCKL(IC)*LAND(IC)*DAYS)
  223 CONTINUE
      BASEDG = TABLE(BDGEST,0.0,5.0,9,PINDEX)
      FRQUAL = TABLE(QUALITY,0.0,25.0,10,SUMTPF)
      FDENSE = TABLE(DENVAL,0.0,5.0,6,GRNDEN)
      DIGEST(IC) = BASEDG*FRQUAL*FDENSE
      GO TO 230
  224 DIGEST(IC) = DIGEST(IC)/1.2
  230 CONTINUE
      RETURN
  250 CONTINUE
      DO 260 IR=1,NLANDS
```

```
      GRN(IR) = 0.0                                                     FORAGE    164
      DIGEST(IR) = 0.0                                                  FORAGE    165
  260 CONTINUE                                                          FORAGE    166
C                                                                       FORAGE    167
      RETURN                                                            FORAGE    168
      END                                                               FORAGE    169
```

```
      SUBROUTINE GENERT(T,DT,NCROPS,MODE)
C     THIS SUBROUTINE MAINTAINS AND UPDATES THE ARRAYS HOLDING EXPECTED
C     PRICES FOR CATTLE, FEED STOCKS, AND PHYSICAL PRODUCTION RESOURCES.
C     TWO MODES OF OPERATION OF THIS SUBROUTINE ARE POSSIBLE....
C
C             MODE = 0    VALUES CYCLED TO ACCOUNT FOR PASSING TIME
C             MODE = 1    NEW EXPECTED FUTURE PRICES READ IN
C
      COMMON/EXPECT/APFUTR(5,20),APPAST(5,5),CPFUTR(20,10),CPPAST(20,5)
     1              ,BPFUTR(8,10),BPPAST(8,5)
      COMMON/SAVER2/TAXINC,TAXLIB,TSPACE(20),NSTRT1,NSTRT2,NSTRT3,NSTRT4
     1              ,DENOM,TAGWGT,TAFEED,WCART,NSTRT5,NSTRT6
      DIMENSION FORWRD(20),BCKWRD(5),WNDWRD(10),LEEWRD(5)
      REAL LEEWRD
      IF(MODE.EQ.1) GO TO 100
C     EXPECTED CATTLE PRICES CYCLED
C
      DO 30 IG=1,5
      DO 10 NFUT=1,20
      FORWRD(NFUT) = APFUTR(IG,NFUT)
   10 CONTINUE
      CALL CBOX(FORWRD,20,2,NSTRT1)
      DO 15 NPAST=1,5
      BCKWRD(NPAST) = APPAST(IG,NPAST)
   15 CONTINUE
      CALL CBOX(BCKWRD,5,2,NSTRT2)
      BCKWRD(5) = FORWRD(1)
      DO 20 NFUT=1,20
      APFUTR(IG,NFUT) = FORWRD(NFUT)
   20 CONTINUE
      DO 25 NPAST=1,5
      APPAST(IG,NPAST) = BCKWRD(NPAST)
   25 CONTINUE
   30 CONTINUE
C     EXPECTED CROP PRICES CYCLED
C
      DO 60 NC=1,20
      DO 40 NWIND=1,10
      WNDWRD(NWIND) = CPFUTR(NC,NWIND)
   40 CONTINUE
      CALL CBOX(WNDWRD,10,2,NSTRT3)
      DO 45 NLEE=1,5
      LEEWRD(NLEE) = CPPAST(NC,NLEE)
   45 CONTINUE
      CALL CBOX(LEEWRD,5,2,NSTRT4)
      LEEWRD(5) = WNDWRD(1)
      DO 50 NWIND=1,10
      CPFUTR(NC,NWIND) = WNDWRD(NWIND)
   50 CONTINUE
      DO 55 NLEE=1,5
      CPPAST(NC,NLEE) = LEEWRD(NLEE)
   55 CONTINUE
   60 CONTINUE
C     EXPECTED PRICES OF PHYSICAL PRODUCTION RESOURCES CYCLED
C
      DO 90 LA=1,8
      DO 70 LWIND=1,10
      WNDWRD(LWIND) = BPFUTR(LA,LWIND)
   70 CONTINUE
      CALL CBOX(WNDWRD,10,2,NSTRT5)
      DO 75 LLEE=1,5
      LEEWRD(LLEE) = BPPAST(LA,LLEE)
   75 CONTINUE
      CALL CBOX(LEEWRD,5,2,NSTRT6)
      LEEWRD(5) = WNDWRD(1)
      DO 80 LWIND=1,10
      BPFUTR(LA,LWIND) = WNDWRD(LWIND)
   80 CONTINUE
      DO 85 LLEE=1,5
      BPPAST(LA,LLEE) = LEEWRD(LLEE)
   85 CONTINUE
   90 CONTINUE
      RETURN
C     EXPECTED PRICES UPDATED
C
```

```
100 CONTINUE                                                            GENERT     82
    DO 130 IF=1,20                                                      GENERT     83
    READ(1,125) (APFUTR(IGR,IF),IGR=1,5)                                GENERT     84
125 FORMAT(10F8.6)                                                      GENERT     85
130 CONTINUE                                                            GENERT     86
    DO 135 LF=1,10                                                      GENERT     87
    READ(1,125) (BPFUTR(LR,LF),LR=1,8)                                  GENERT     88
135 CONTINUE                                                            GENERT     89
    DO 140 NF=1,10                                                      GENERT     90
    READ(1,125) (CPFUTR(NCR,NF),NCR=1,NCRDPS)                           GENERT     91
140 CONTINUE                                                            GENERT     92
    RETURN                                                              GENERT     93
    END                                                                 GENERT     94
```

```
      SUBROUTINE GROFEM
C
C     THIS SUBROUTINE COMPUTES THE GROWTH OF FEMALE CALVES AND HEIFERS.
C     COHORTS 2, 3, 8 , AND 9 ARE MODELED HERE.
C
C     REPRO IS CALLED TO DETERMINE BREEDING RESULTS ON REPLACEMENT AND
C      BRED HEIFERS.
C
C     AWPUB IS CALLED TO DETERMINE THE FIRST ESTROUS TIME FOR HEIFERS.
C
      COMMON/BLOCK/DETPRT,SE_PRT,BEGPRT,PRTCHG,PRTVL1,PRTVL2,DUR,
     1             PLR(9),DR(9),PGRADE(9),TSPRNG,TFALL,WLENGH
      COMMON/SYSVAR/T,DT,KK(9),KHONS(9),SUBPOP(9,40),POP(9),ROUT(9),
     1             DELAY(9),DELAYP(9)
      COMMON/CNTROL/POSTN(10,9),CNCAL(9),FEEDAL(9),RHGAL(9),CULFRC(10),
     1             TDIK(9),TDNC(9),TDMIR(9),TDMIC(9),AMP(5),MHR(5),
     2             OLDMHR(5),RHGFRC(9,20),CNCFRC(9,20),ACFEED(9,2),
     3             SPLIT,DURB(3),TBRD(3),TFFAC(10,2),ASELL(9),ADDRT(9),
     4             C1,C2,C3,C4,C5,C6,C8,C9,C10,C11,TWEAN,TCULL
      COMMON/ENERGY/TDIM,YMILK(7),SMM,DIFM,KM,TCVWN,CFE,CFD,ACDMIR(9),
     1             ACDMIC(9),RTDN(9),CTDN(9),WSM,WDIF,KW,WEANWT(2,16),
     2             FDI(13)
      COMMON/FROVAL/W(3,40),GRADE(9,40),WGTMAX(9),BIN(9,40),FATFAC,
     1             FMATOF(11),DMAIN(9,40),PAWATE(9),THOLD,TYRENG
      COMMON/REPROD/TBRTH(2,16),DEST,GEST,TEST(3,40),BEGCAV,ENDCAV,
     1             INTCAV,DM,TEBC,CONCP(5),POPT(11),CPAT(3,40,13),
     2             CTIM(3,40,13),CFC,INB(3,-3),NR(3),IPREG,LAC,
     3             PCS(10,14),PCP(11),WF(10),ICOUNT(2,16),CSM,CDIF,
     4             KG,GGEST,PHC(2,16,13),HP(2,16,13),PT(2,16,13),ML,
     5             MAXHF(2),HFOUT,AFEST(3,40),WFEST(3,40),FEST(2,16),
     6             CONNEW(2,16),KCNT(2),SCNEW(2),OLDCP(3,13),MOMX
      DIMENSION SR(4),SC(4),DAVDGN(5),HCV(6)
      REAL MLK
      DATA CAVDGN/-0.0,-0.3,-0.4,-0.5,-0.2119/
C
C      INITIALIZATIONS
C
      TAMD=.15
      DAYS = 365.0*DT
      DMX=0.35
      TBH=TBRD(2)+INT(T)
      YEAR = T - INT(T + 0.0001)
      DIFF = DT/2.0
      DO 99 I=1,4
      SR(I)=0.0
      SC(I)=0.0
   99 CONTINUE
      J = KK(8)
      JA = KK(9)
C
C     * * * COMPUTE GROWTH  OF HEIFER CALVES
C
      IF(POP(8) .LE. 0.0)GO TO 101
C
C      COMPUTE FEED ALLOCATION (KGS. DM) /ANIMAL/DAY.
C
      RHGPC=RHGAL(8)/POP(8)/DAYS
      CNCPC=CNCAL(8)/POP(8)/DAYS
      RCPC=RHGPC+CNCPC
      CALL CNVRT(TDNR(8),EMAR,EGAR)
      CALL CNVRT(TDNC(8),EMAC,EGAC)
      DO 100  I=1,J
      DGAIN(8,I) = 0.0
      IF(SUBPOP(8,I).LE.0.10) GO TO 100
      TSC=(FLOAT(I)/FLOAT(J))*DELAY(8)
C
C      COMPUTE NET ENERGY REQUIRED AND NET ENERGIES AVAILABLE
C      FROM FEEDS, AND DRY MATTER INTAKES FROM ROUGHAGE
C      AND CONCENTRATES.
C
   10 WM=W(8,I)**.75
      EMR=.077*WM
      MLK=TABEXE(YMILK,SMM,DIFM,KM,TSC)
      DMMLK=.12*MLK
      CALL CNVRT(TDNM,EMAM,EGAM)
      IF(TSC.GT.TAMD) GO TO 2
      EM = EMAM*CFE
      FM = EMR/EM
      EMINT = -.226.3*WM + 2.115*TSC
      IF(EMINT.LT.DMMLK) DMMLK = EMINT
      FG=DMMLK-FM
```

```
      EG=EGAM*CFE*FG
      DMIC=0.0
      DMIR=0.0
      IF(EG.LT.0.0) 6,7
    2 DMI=DMX*WM
      DF=DMI-DMMLK
      IF(RCPC .GT. DF)3,4
    3 DMIC = CNCPC
      IF(DMIC.LE.DF) GO TO 803
      DMIC = DF
      DMIR = 0.0
      GO TO 5
  803 DMIRUP = DF - DMIC
      DMIR = AMIN1(DMIRUP,RHGPC)
      GO TO 5
    4 DMIR=RHGPC*CFD
      DMIC=CNCPC
    5 DI=DMMLK+DMIR+DMIC
      EM=((EMAM*DMMLK)+(EMAR*DMIR)+(EMAC*DMIC))*(CFE/DI)
      FM=EMS/EM
      FG=DI-FM
      TEG=((EGAM*DMMLK)+(EGAR*DMIR)+(EGAC*DMIC))/DI
      IF((FG.LT.0.0).AND.(TEG.LT.0.0)) FG = -FG
      EG=TEG*CFE*FG
      IF(EG .LT. 0.)6,7
C
C      COMPUTE AVERAGE DAILY GAIN (ADG) FROM TIME T TO T+DT.
C
    6 E=ABS(EG)
      CFAC = TABLIE(CAVDGN,0.0,0.50,4,E)
      DGAIN(8,I) = -1.0*(1.0 - EXP(DT*FLOAT(I)/CFAC))
      GO TO 8
    7 CFAC = TABLIE(CAVDGN,0.0,0.50,4,EG)
      DGAIN(8,I) =  1.0*(1.0 - EXP(DT*FLOAT(I)/CFAC))
C
C      COMPUTE TOTAL DRY MATTER INTAKES AND ACCUMULATED DRY
C      MATTER INTAKES OF COHORT 8.
C
    8 SR(4)=SR(4)+(DMIR*DAYS*SUBPOP(8,I))
      SC(4)=SC(4)+(DMIC*DAYS*SUBPOP(8,I))
  100 CONTINUE
  101 CONTINUE
      TDMIR(8)=SR(4)
      TDMIC(8)=SC(4)
      RTDN(8)=TDMIR(8)*TDNR(8)
      CTDN(8)=TDMIC(8)*TDNC(8)
      ACDMIR(8)=ACDMIR(8)+SR(4)
      ACDMIC(8)=ACDMIC(8)+SC(4)
C
C      * * * GROWTH OF SLAUGHTER HEIFERS.
C
      IF(POP(9) .LE. 0.0) GO TO 201
C      COMPUTE ROUGHAGE AND CONCENTRATE ALLOCATION (KGS. DM)
C      PER ANIMAL PER DAY.
C
      RHGPC=RHGAL(9)/POP(9)/DAYS
      CNCPC=CNCAL(9)/POP(9)/DAYS
      RCPC=RHGPC+CNCPC
      RATIO=CNCPC/(CNCPC+RHGPC)
      CALL CNVRT(TDNR(9),EMAR,EGAR)
      CALL CNVRT(TDNC(9),EMAC,EGAC)
      DO 200 L=1,JA
      DGAIN(9,L) = 0.0
      IF(SUBPOP(9,L).LE.0.10) GO TO 200
C
C      COMPUTE NET ENERGY MAINTENANCE REQUIRED AND NET ENERGIES
C      AVAILABLE IN FEEDS, AND DRY MATTER INTAKES FROM
C      ROUGHAGE AND CONCENTRATES.
C
      WM=W(9,L)**.75
      EMS=.77*WM
      PD=TABLE(PDI,WSM,WDIF,KW,W(9,L))
      DDMI=PD*W(9,L)
      IF(RCPC.GT.0.0) GO TO 20
      EG = -EMS
      GO TO 23
   20 IF(DDMI.LE.RCPC) GO TO 21
      DMIC = CNCPC
      DMIR=RHGPC*CFD
      GO TO 22
   21 DMIC = CNCPC
```

```
      IF(DMIC.LE.ODMI) GO TO 821
      DMIC = ODMI
      DMIR = 0.0
      GO TO 22
  821 DMIRUP = ODMI - DMIC
      DMIR = AMIN1(DMIRUP,RHSPC)
   22 DI=DMIR+DMIC
      EM=((EMAR*DMIR)+(EMAC*DMIC))*(CFE/DI)
      FM=EMR/EM
      FG=DI-FM
      TEG=((EGAR*DMIR)+(EGAC*DMIC))/DI
      IF((FG.LT.0.0).AND.(TEG.LT.0.0)) FG = -FG
      EG=TEG*CFE*FG
      IF(EG .LT. 0.)23,24
C
C      COMPUTE AVERAGE DAILY GAIN (ADG) FROM TIME T TO T+DT.
C
   23 E=ABS(EG)
      A=.03139+((.0506*E)/WM)
      DGAIN(9,L)=(-1.)*(SQRT(A)-.05603)/.0253
      GO TO 25
   24 B=.03139+((.0506*EG)/WM)
      DGAIN(9,L)=(SQRT(B)-.05603)/.0253
C
C      COMPUTE TOTAL AND ACCUMULATED DRY MATTER INTAKES
C      OF ROUGHAGE AND CONCENTRATES OVER TIME PERIOD DT FOR
C      COHORT 9.
C
   25 SR(3)=SR(3)+(DMIR*DAYS*SUBPOP(9,L))
      SC(3)=SC(3)+(DMIC*DAYS*SUBPOP(9,L))
  200 CONTINUE
  201 CONTINUE
      TOMIR(9)=SR(3)
      TOMIC(9)=SC(3)
      RTON(9)=TOMIR(9)*TONR(9)
      CTON(9)=TOMIC(9)*TONC(9)
      ACDMIR(9)=ACDMIR(9)+SR(3)
      ACDMIC(9)=ACDMIC(9)+SC(3)
C
C      * * * GROWTH AND MATURATION OF MARKET BREEDING
C      HEIFERS AND REPLACEMENT HEIFERS.
C
      IF(IPREG .EQ. 1 .OR. IPREG .EQ. 3) GGEST = 0.192
      IF(IPREG .EQ. 0 .OR. IPREG .EQ. 2) GGEST = 0.0
      DO 400 M=2,3
      K = M - 1
      SC(K) = SR(K) = 0.0
      IF(POP(M).LE.0.0) GO TO 301
      IF((YEAR.LE.TBRD(2)-DIFF).OR.(YEAR.GT.TBRD(2)+DIFF)) GO TO 49
      PRINT48,M
   48 FORMAT(5X,*REPRO CALLED FROM GROFEM FOR COHORT*I3)
      CALL REPRO(M)
   49 CONTINUE
      KOUNT=1
      JB=KK(M)
      KNT=1
      INDKTR = 0
C
C      COMPUTE FEED ALLOCATION (KGS. DM) /ANIMAL/DAY.
C
      RHGPC=RHGAL(M)/POP(M)/DAYS
      CNCPC=CNCAL(M)/POP(M)/DAYS
      RCPC=RHGPC+CNCPC
      RATIO=CNCPC/RCPC
      CALL CNVRT(TONR(M),EMAR,EGAR)
      CALL CNVRT(TONC(M),EMAC,EGAC)
      DO 300 L=1,JB
      AWCH=0.0
      AEL=0.0
      DGAIN(M,L) = 0.0
      IF(SUBPOP(M,L).LE.0.10) GO TO 300
C
C      IF HEIFERS HAVE REACHED ABOUT ONE YEAR OF AGE OR
C      SPRING PASTURING HAS BEGUN, COMPUTE AGE AND WEIGHT AT
C      FIRST ESTRUS.
C
      IF((T.LE.TYRLNG-DIFF).OR.(T.GT.TYRLNG+DIFF)) GO TO 41
      IF(L .GE. NR(M)) GO TO 41
      IF(INDKTR .EQ. 1) GO TO 69
      DO 40 IKR=1,16
      FEST(K,IKR) = 0.0
```

```
   40 CONTINUE                                                          GROFEM   245
      DO 68 IKT = 1,JB                                                  GROFEM   246
      AFEST(K,IKT) = 0.0                                                GROFEM   247
      WFEST(K,IKT) = 0.0                                                GROFEM   248
   68 CONTINUE                                                          GROFEM   249
      INJKTR = 1                                                        GROFEM   250
   69 CONTINUE                                                          GROFEM   251
      TSPAN = ABS(TYRLNG - TWOLD)*365.0                                 GROFEM   252
      ADGWS = (W(M,L) - WEANWT(K,KNT))/TSPAN                            GROFEM   253
      CALL AWPUB(TBRTH(K,KNT),WEANWT(K,KNT),ADGWS,AP,WP)                GROFEM   254
      AFEST(M-1,L) = AP                                                 GROFEM   255
      WFEST(M-1,L) = WP                                                 GROFEM   256
      FEST(K,KNT) = AP + TBRTH(K,KNT)                                   GROFEM   257
      KNT=KNT+1                                                         GROFEM   258
   41 CONTINUE                                                          GROFEM   259
C                                                                       GROFEM   260
C      COMPUTE NET ENERGY REQUIRED AND NET ENERGIES AVAILABLE           GROFEM   261
C      FROM FEEDS, AND DRY MATTER INTAKES FROM ROUGHAGE                 GROFEM   262
C      AND CONCENTRATES.                                                GROFEM   263
C                                                                       GROFEM   264
C                                                                       GROFEM   265
C      COMPUTE AVERAGE DAILY GAIN (ADG) FROM TIME T TO T+DT.            GROFEM   266
      WM=W(M,L)**.75                                                    GROFEM   267
      EMR=.077*WM                                                       GROFEM   268
C                                                                       GROFEM   269
C      COMPUTE ENERGY REQUIRED FOR LACTATION AND GAINS DUE TO GESTATION GROFEM   270
C      FOR HEIFERS WHICH ARE PREGNANT OR LACTATING, AND WEIGHT LOSS     GROFEM   271
C      FOR FIRST CALF HEIFERS WHICH HAVE CALVED.                        GROFEM   272
C                                                                       GROFEM   273
      SMLK = 0.0                                                        GROFEM   274
      SCPOP=0.0                                                         GROFEM   275
      IF(L.LT.NR(M)) GO TO 53                                           GROFEM   276
      IF(LAC.NE.1) GO TO 53                                             GROFEM   277
      TMK = TE30                                                        GROFEM   278
      DO 52 IA=1,MOMX                                                   GROFEM   279
      JQ=IA                                                             GROFEM   280
      AMLK=TABEXP(YMILK,SMM,DIFM,KM,TMK)                                GROFEM   281
      CPOP = PHO(K,KOUNT,IA+1)*SUBPOP(M,L)                              GROFEM   282
      SMLK=SMLK+(AMLK*0.95*CPOP)                                        GROFEM   283
      SCPOP=SCPOP+CPOP                                                  GROFEM   284
      TMK=TMK-(DM*FLOAT(JQ))                                            GROFEM   285
   52 CONTINUE                                                          GROFEM   286
      ELAC=(SMLK*0.69.)                                                 GROFEM   287
      EML=WM*0.024*SCPOP                                                GROFEM   288
      AEL=(ELAC+EML)/SUBPOP(M,L)                                        GROFEM   289
   53 CONTINUE                                                          GROFEM   290
C-----THE PROPORTION OF THE BODY WEIGHT OF DRY MATTER INTAKE DAILY      GROFEM   291
      PDNL = TABLIE(PDI,WSM,MDIF,KW,W(M,L))                             GROFEM   292
      PDL = 0.0275                                                      GROFEM   293
      PD =(PDNL*(SUBPOP(M,L) - SCPOP) + PDL*SCPOP)/SUBPOP(M,L)          GROFEM   294
      DOMI = PD*W(M,L)                                                  GROFEM   295
      ISHIFT = 0                                                        GROFEM   296
C-----ROUGHAGE AND CONCENTRATE INTAKES DETERMINED                       GROFEM   297
      OMIR = OMIC = 0.0                                                 GROFEM   298
      IF(SCPC.GT.0.0) GO TO 42                                          GROFEM   299
      ISHIFT = 1                                                        GROFEM   300
      GO TO 73                                                          GROFEM   301
   42 IF(DOMI.LE.RCPC) GO TO 43                                         GROFEM   302
      OMIC = CNCPC                                                      GROFEM   303
      OMIR = RHGPC*CFD                                                  GROFEM   304
      GO TO 44                                                          GROFEM   305
   43 OMIC = CNCPC                                                      GROFEM   306
      IF(OMIC.LE.DOMI) GO TO 843                                        GROFEM   307
      OMIC = DOMI                                                       GROFEM   308
      OMIR = 0.0                                                        GROFEM   309
      GO TO 44                                                          GROFEM   310
  843 OMIRUP = DOMI - OMIC                                              GROFEM   311
      OMIR = AMIN1(OMIRUP,RHGPC)                                        GROFEM   312
   44 DI = OMIR + OMIC                                                  GROFEM   313
   73 CONTINUE                                                          GROFEM   314
      IF(L.LT.NR(M)) GO TO 65                                           GROFEM   315
      IF((IPREG.NE.1).AND.(IPREG.NE.3)) GO TO 65                        GROFEM   316
      JZ = ICOUNT(K,KOUNT)                                              GROFEM   317
      IF((YEAR.LT.TBRD(2)).OR.(YEAR.GT.TMEAN)) GO TO 54                 GROFEM   318
      IF((YEAR.GT.ENDCAV).AND.(TBRD(2).GT.ENDCAV)) GO TO 54             GROFEM   319
      GO TO 57                                                          GROFEM   320
   54 CONTINUE                                                          GROFEM   321
      IF((YEAR.GE.BEGCAV).AND.(YEAR.LE.ENDCAV)) 55,57                   GROFEM   322
   55 COWP = DLOCP(M,KOUNT)*SUBPOP(M,L) - SCPOP                         GROFEM   323
      GP = GGEST*COWP/SUBPOP(M,L)                                       GROFEM   324
      DO 56 IQ=1,ML                                                     GROFEM   325
```

```
   56 HCV(IQ)=PHC(K,KOUNT,IQ)                                          GROFEM    326
      TD=T+DT                                                          GROFEM    327
      PHCV=TABEXE(HCV,CSM,CDIF,KC,TD)                                  GROFEM    328
      WLCV = (PHCV*GGEST*GEST)/DT                                      GROFEM    329
      GO TO 54                                                         GROFEM    330
   57 WLCV=0.0                                                         GROFEM    331
      IF(YEAR.LT.TBRD(2)) HPREG = 0.0                                  GROFEM    332
      IF(YEAR.GT.TBRD(2)+DUR3(2)) HPREG = HP(K,KOUNT,JZ)               GROFEM    333
      IF((YEAR.LT.TBRD(2)).OR.(YEAR.GT.TBRD(2)+DUR3(2)))GO TO 63       GROFEM    334
      HPREG = 0.0                                                      GROFEM    335
      DO 61 KQ=1,JZ                                                    GROFEM    336
      PTP=PT(K,KOUNT,KQ) + DEST                                        GROFEM    337
      IF(T .GE.PT(K,KOUNT,KQ) .AND. T .LT. PTP)60,61                   GROFEM    338
   60 HPREG=HP(K,KOUNT,KQ)                                             GROFEM    339
      GO TO 62                                                         GROFEM    340
   61 CONTINUE                                                         GROFEM    341
   62 GP=GGEST*HPREG                                                   GROFEM    342
      GO TO 64                                                         GROFEM    343
   63 GP = GGEST*HPREG                                                 GROFEM    344
   64 AWCH=GP-WLCV                                                     GROFEM    345
      KOUNT=KOUNT+1                                                    GROFEM    346
   65 CONTINUE                                                         GROFEM    347
      IF(ISHIFT.EQ.0) GO TO 74                                         GROFEM    348
      EG = - EMR - AEL                                                 GROFEM    349
      GO TO 75                                                         GROFEM    350
   74 CONTINUE                                                         GROFEM    351
      EM=((EMAR*DMIR)+(EMAC*DMIC))*(CFE/DI)                            GROFEM    352
      FM=(EMR+AEL)/EM                                                  GROFEM    353
      FG=DI-FM                                                         GROFEM    354
      TEG=((EGAR*DMIR)+(EGAC*DMIC))/DI                                 GROFEM    355
      IF((FG.LT.0.0).AND.(TEG.LT.0.0)) FG = -FG                        GROFEM    356
      EG=TEG*CFE*FG                                                    GROFEM    357
      IF(EG .LT. 0.)45,46                                              GROFEM    358
C                                                                      GROFEM    359
C      COMPUTE AVERAGE DAILY GAIN (ADG) FROM TIME T TO T+DT.           GROFEM    360
C                                                                      GROFEM    361
   45 E=ABS(EG)                                                        GROFEM    362
      A=.003139+((.0506*E)/WM)                                         GROFEM    363
      DGAIN(N,L)=((-1.)*(SQRT(A)-.05603)/.0253)+AWCH                   GROFEM    364
      GO TO 47                                                         GROFEM    365
   46 B=.003139+((.0506*EG)/WM)                                        GROFEM    366
      DGAIN(M,L)=((SQRT(B)-.05603)/.0253)+AWCH                         GROFEM    367
C                                                                      GROFEM    368
C      COMPUTE TOTAL AND ACCUMULATED DRY MATTER INTAKES                GROFEM    369
C      OF ROUGHAGE AND CONCENTRATES OVER TIME PERIOD DT FOR            GROFEM    370
C      COHORTS 2 AND 3.                                                GROFEM    371
C                                                                      GROFEM    372
   47 SR(K)=SR(K)+(DMIR*DAYS*SUBPOP(N,L))                              GROFEM    373
      SC(K)=SC(K)+(DMIC*DAYS*SUBPOP(M,L))                              GROFEM    374
  300 CONTINUE                                                         GROFEM    375
  301 CONTINUE                                                         GROFEM    376
      TDMIR(M)=SR(K)                                                   GROFEM    377
      TDMIC(M)=SC(K)                                                   GROFEM    378
      RTDN(M)=TDMIR(M)*TDNR(M)                                         GROFEM    379
      CTDN(M)=TDMIC(M)*TDNC(M)                                         GROFEM    380
      ACDMIR(M)=ACDMIR(M)+SR(K)                                        GROFEM    381
      ACDMIC(M)=ACDMIC(M)+SC(K)                                        GROFEM    382
  400 CONTINUE                                                         GROFEM    383
      RETURN                                                           GROFEM    384
      END                                                              GROFEM    385
```

```
      SUBROUTINE GROMAL                                                 GROMAL      2
                                                                        GROMAL      3
C      THIS SUBROUTINE COMPUTES GROWTH OF STEERS FROM BIRTH TO MATURITY GROMAL      4
C      OR TIME OF MARKETING, AND GROWTH AND MAINTENANCE OF  BULLS.      GROMAL      5
C                                                                       GROMAL      6
C                                                                       GROMAL      7
      COMMON/BLOCK/DETPRT,SE_PRT,BEGPRT,PRTCHG,PRTVL1,PRTVL2,DUR,       GROMAL      8
     1             PLR(9),DP(9),PGPADE(9),TSPRNG,TFALL,WLENGH           GROMAL      9
      COMMON/SYSVAR/T,DT,KK(9),KNOWS(9),SUBPOP(9,40),POP(9),ROUT(9),    GROMAL     10
     1             DELAY(9),DELAYP(9)                                   GROMAL     11
      COMMON/CNTROL/PDSTRB(9,9),CNCAL(9),FEEDAL(9),RHGAL(9),CULFRC(10), GROMAL     12
     1             TONR(9),TONC(9),TDMIR(9),TDMIC(9),AHR(5),MHR(5),     GROMAL     13
     2             OLDMHR(5),RHGFRC(9,20),CNCFRC(9,20),ACFEED(9,2),     GROMAL     14
     3             SPLIT,DUMM(3),TBFD(3),TFRAC(10,2),ASELL(9),ADDRT(9), GROMAL     15
     4             C1,C2,C3,C4,C5,C6,C8,C9,C10,C11,TWEAN,TCULL          GROMAL     16
      COMMON/ENERGY/TDMM,YMILK(7),SMM,DIFM,KM,TCVMM,CFE,CFD,ACDMIR(9),  GROMAL     17
     1             ACDMIC(9),RTCN(9),CTON(9),WSM,WDIF,KW,WEANWT(2,16),  GROMAL     18
     2             PDI(13)                                              GROMAL     19
      COMMON/HROVAL/W(9,40),GRADE(9,40),WGTMAX(9),RIN(9,40),FATFAC,     GROMAL     20
     1             FMATUR(11),DGAIN(9,40),PAWATE(9),TWOLD,TYRLNG        GROMAL     21
      DIMENSION SR(4),SC(4),DAVDGN(5)                                   GROMAL     22
      REAL MLK                                                          GROMAL     23
      DATA DAVDGN/-0.6,-0.5,-0.4,-0.3,-0.2019/                          GROMAL     24
C                                                                       GROMAL     25
C      INITIALIZATIONS                                                  GROMAL     26
C                                                                       GROMAL     27
      DAYS = 365.0*DT                                                   GROMAL     28
      TAMD=0.15                                                         GROMAL     29
      DMX=0.95                                                          GROMAL     30
      CFB = 0.0003                                                      GROMAL     31
C                                                                       GROMAL     32
C      COMPUTE GROWTH AND MAINTENANCE OF MATURE BULLS, YOUNG BULLS,     GROMAL     33
C      MARKET STEERS, AND MALE CALVES RESPECTIVELY.                     GROMAL     34
C                                                                       GROMAL     35
      DO 500 I=4,7                                                      GROMAL     36
      IK=KK(I)                                                          GROMAL     37
      IM=I-3                                                            GROMAL     38
      SR(IM) = SC(IM) = 0.0                                             GROMAL     39
      IF(POP(I).LE.0.0) GO TO 401                                       GROMAL     40
C                                                                       GROMAL     41
C      COMPUTE FEED ALLOCATION (KGS. DM) / ANIMAL / DAY.                GROMAL     42
C                                                                       GROMAL     43
      RHGPB=RHGAL(I)/POP(I)/DAYS                                        GROMAL     44
      CNCPB=CNCAL(I)/POP(I)/DAYS                                        GROMAL     45
      RCPB=RHGPB+CNCPB                                                  GROMAL     46
      RATIO = CNCPB/RCPB                                                GROMAL     47
      CALL CNVRT(TONR(I),EMAR,EGAR)                                     GROMAL     48
      CALL CNVRT(TONC(I),EMAC,EGAC)                                     GROMAL     49
      DO 400 J=1,IK                                                     GROMAL     50
      DGAIN(I,J) = 0.0                                                  GROMAL     51
      IF(SUBPOP(I,J).LE.0.10) GO TO 400                                 GROMAL     52
C                                                                       GROMAL     53
C      COMPUTE NET ENERGY REQUIRED AND NET ENERGIES AVAILABLE           GROMAL     54
C      FROM FEEDS, AND DRY MATTER INTAKES FROM ROUGHAGES AND CONCENTRATE GROMAL     55
C                                                                       GROMAL     56
      WM=W(I,J)**0.75                                                   GROMAL     57
      EMR=0.077*WM                                                      GROMAL     58
      IF(I .EQ. 7)2,8                                                   GROMAL     59
C                                                                       GROMAL     60
C      COMPUTE ENERGY AND DRY MATTER VALUES FOR SUCKLING CALVES.        GROMAL     61
C                                                                       GROMAL     62
    2 TSC=(FLOAT(J)/FLOAT(IK))*DELAY(7)                                 GROMAL     63
      MLK=TABEXP(YMILK,SMM,DIFM,KM,TSC)                                 GROMAL     64
      DMMLK=0.12*MLK                                                    GROMAL     65
      CALL CNVRT(TCVMM,EMAM,EGAM)                                       GROMAL     66
      IF(TSC.GT.TAMD) GO TO 4                                           GROMAL     67
      EM = EMAM*CFE                                                     GROMAL     68
      FM = EMR/EM                                                       GROMAL     69
      EMINT = 0.022603*WM + 2.115*TSC                                   GROMAL     70
      IF(EMINT.LT.DMMLK) DMMLK = EMINT                                  GROMAL     71
      FG=DMMLK-FM                                                       GROMAL     72
      EG=EGAM*CFE*FG                                                    GROMAL     73
      DMIC=0.0                                                          GROMAL     74
      DMIR=0.0                                                          GROMAL     75
      IF(EG.LT.0.0) 21,22                                               GROMAL     76
C                                                                       GROMAL     77
C-----OLDER CALVES CONSUME SOME FEEDS OTHER THAN MILK                   GROMAL     78
C                                                                       GROMAL     79
    4 DMI=DMX*WM                                                        GROMAL     80
      DF=DMI-DMMLK                                                      GROMAL     81
      IF(RCPB .GT. DF)5,6                                               GROMAL     82
    5 DMIC = CNCPB
```

```
      IF(DMIC.LE.DF) GO TO 805                                          GROMAL     83
      DMIC = DF                                                         GROMAL     84
      DMIR = 0.0                                                        GROMAL     85
      GO TO 7                                                           GROMAL     86
  805 DMIRUP = DF - DMIC                                                GROMAL     87
      DMIR = AMIN1(DMIRUP,RHGPB)                                        GROMAL     88
      GO TO 7                                                           GROMAL     89
    5 DMIC=DNCPB                                                        GROMAL     90
      DMIR=RHGPB*CFD                                                    GROMAL     91
    7 DI=DMMLK+DMIR+DMIC                                                GROMAL     92
      EM=((EMAR*DMMLK)+(EMAR*DMIR)+(EMAC*DMIC))*(CFE/DI)                GROMAL     93
      FM=EMR/EM                                                         GROMAL     94
      FG=DI-FM                                                          GROMAL     95
      TEG=((EGAR*DMMLK)+(EGAR*DMIR)+(EGAC*DMIC))/DI                     GROMAL     96
      IF((FG.LT.0.0).AND.(TEG.LT.0.0)) FG = -FG                         GROMAL     97
      EG=TEG*CFE*FG                                                     GROMAL     98
      IF(EG.LT.0.0) 21,22                                               GROMAL     99
C                                                                       GROMAL    100
C      COMPUTE ENERGY AND DRY MATTER VALUES FOR BULLS AND STEERS.       GROMAL    101
C                                                                       GROMAL    102
    8 IF(I .EQ. 4 .OR. I .EQ. 5)9,10                                    GROMAL    103
    9 CFBUL = CFB*W(I,J)                                                GROMAL    104
      SQCF =  INT(W(I,J)/100.)*CFBUL*CFBUL                              GROMAL    105
      CFM = 1.0 + CFBUL + SQCF                                          GROMAL    106
      GO TO 11                                                          GROMAL    107
   10 CFM=CFE                                                           GROMAL    108
   11 CONTINUE                                                          GROMAL    109
      RO=TABLE(ROI,WGM,WDIF,KW,W(I,J))                                  GROMAL    110
      DOMI=RO*W(I,J)                                                    GROMAL    111
      IF(DOMI.GT.0.0) GO TO 12                                          GROMAL    112
      EG = 0.0 - EMR                                                    GROMAL    113
      GO TO 15                                                          GROMAL    114
   12 IF(DOMI.LE.RCPB) GO TO 13                                         GROMAL    115
      DMIC = DNCPB                                                      GROMAL    116
      DMIR=RHGPB*CFD                                                    GROMAL    117
      GO TO 14                                                          GROMAL    118
   13 DMIC = DNCPB                                                      GROMAL    119
      IF(DMIC.LE.DOMI) GO TO 813                                        GROMAL    120
      DMIC = DOMI                                                       GROMAL    121
      DMIR = 0.0                                                        GROMAL    122
      GO TO 14                                                          GROMAL    123
  813 DMIRUP = DOMI - DMIC                                              GROMAL    124
      DMIR = AMIN1(DMIRUP,RHGPB)                                        GROMAL    125
   14 DI=DMIR+DMIC                                                      GROMAL    126
      EM=((EMAR*DMIR)+(EMAC*DMIC))*(CFM/DI)                             GROMAL    127
      FM=EMR/EM                                                         GROMAL    128
      FG=DI-FM                                                          GROMAL    129
      TEG=((EGAR*DMIR)+(EGAC*DMIC))/DI                                  GROMAL    130
      IF((FG.LT.0.0).AND.(TEG.LT.0.0)) FG = -FG                         GROMAL    131
      EG=TEG*CFM*FG                                                     GROMAL    132
      IF(EG .LT. 0.0)15,16                                              GROMAL    133
C                                                                       GROMAL    134
C      COMPUTE AVERAGE DAILY GAIN (ADG) FROM TIME T TO T+DT.            GROMAL    135
C                                                                       GROMAL    136
   15 E=ABS(EG)                                                         GROMAL    137
      A=0.02779 + ((0.02736*E)/WM)                                      GROMAL    138
      DGAIN(I,J)=(-1.0)*(SQRT(A)-0.05272)/0.01368                       GROMAL    139
      IF(I .EQ. 4)DGAIN(I,J)=DGAIN(I,J)/2.25                            GROMAL    140
      GO TO 17                                                          GROMAL    141
   16 B=0.02779 + ((0.02736*EG)/WM)                                     GROMAL    142
      DGAIN(I,J)=(SQRT(B)-0.05272)/0.01368                              GROMAL    143
      IF(I .EQ. 4)DGAIN(I,J)=DGAIN(I,J)/2.25                            GROMAL    144
      GO TO 17                                                          GROMAL    145
C                                                                       GROMAL    146
C-----CALVES GAIN WEIGHT AT AN INCREASING RATE WITH AGE                 GROMAL    147
C                                                                       GROMAL    148
   21 E = ABS(EG)                                                       GROMAL    149
      CFAC = TABLIE(CAVDGN,0.0,1.50,4,E)                                GROMAL    150
      DGAIN(7,J) = -1.0*(1.0 - EXP(DT*FLOAT(J)/CFAC))                   GROMAL    151
      GO TO 17                                                          GROMAL    152
   22 CFAC = TABLIE(CAVDGN,0.0,1.50,4,EG)                               GROMAL    153
      DGAIN(7,J) =  1.0*(1.0 - EXP(DT*FLOAT(J)/CFAC))                   GROMAL    154
C                                                                       GROMAL    155
C      COMPUTE TOTAL AND ACCUMULATED DRY MATTER INTAKES AND TOTAL TON   GROMAL    156
C      INTAKE OF ROUGHAGE AND CONCENTRATES OVER TIME PERIOD DT          GROMAL    157
C      FOR COHORTS 4,5,6, AND 7.                                        GROMAL    158
C                                                                       GROMAL    159
   17 SR(IM)=SR(IM)+(DMIR*DAYS*SUMROF(I,J))                             GROMAL    160
      SC(IM)=SC(IM)+(DMIC*DAYS*SUMCOF(I,J))                             GROMAL    161
  400 CONTINUE                                                          GROMAL    162
  401 CONTINUE                                                          GROMAL    163
```

```
      TOMIR(I)=SR(IM)                                                   GROMAL    164
      TOMIC(I)=SC(IM)                                                   GROMAL    165
      RTON(I)=TOMIR(I)*TONR(I)                                          GROMAL    166
      CTON(I)=TOMIC(I)*TONC(I)                                          GROMAL    167
      ACOMIR(I)=ACOMIR(I)+SR(IM)                                        GROMAL    168
      ACOMIC(I)=ACOMIC(I)+SC(IM)                                        GROMAL    169
  501 CONTINUE                                                          GROMAL    170
      RETURN                                                            GROMAL    171
      END                                                               GROMAL    172
```

```
      SUBROUTINE HDMOG4                                                 HDMOG4      2
                                                                        HDMOG4      3
C     VERSION 2 ---- SEPTEMBER 15, 1975                                 HDMOG4      4
C     THIS VERSION INCORPORATES THE BIRTH GENERATING SUBROUTINES        HDMOG4      5
C     OF M. SCHUETTE                                                    HDMOG4      6
C                                                                       HDMOG4      7
C     HERD DEMOGRAPHY BASED ON UPON THESE ASSUMPTIONS...                HDMOG4      8
C      1. NINE SEPERATE HERD COHORTS --- SEE DOCUMENTATION FOR DETAILS  HDMOG4      9
C      2. VARIABLE DELAY TIMES USING SUBROUTINE DLVDPL                  HDMOG4     10
C      3. INDIVIDUAL COHORT PROPORTIONAL LOSS RATES...PLR               HDMOG4     11
C      4. INDIVIDUAL NUMBER OF STAGES PER COHORT DELAY                  HDMOG4     12
C      5. EXTERNAL SPECIFICATION OF THESE PARAMETERS                    HDMOG4     13
C         A. C1...FRACTION OF BIRTHS FEMALE                             HDMOG4     14
C         B. C2...FRACTION OF MALE CALVES HELD FOR BULL PRODUCTION      HDMOG4     15
C         C. C3...FRACTION OF FEMALE CALVES FOR SLAUGHTER MARKET        HDMOG4     16
C         D. C4...FRACTION OF MALE CALVES SOLD FOR SLAUGHTER AFTER WEANIN HDMOG4     17
C         E. C5...FRACTION OF FEMALE CALVES HELD FOR HERD REPLACEMENT   HDMOG4     18
C         F. C6...FRACTION OF YOUNG BULLS SOLD BEFORE MATURITY          HDMOG4     19
C         G. C9...FRACTION OF FEMALE CALVES SOLD FOR SLAUGHTER          HDMOG4     20
C         H. C11...FRACTION OF REPLACEMENT HEIFERS ENTERING COW COHORT  HDMOG4     21
C         I. C11...FRACTION OF BRED HEIFERS SOLD TO THE MARKET          HDMOG4     22
C         J. DR(I)...CURRENT ANNUAL DEATH RATE FOR COHORT I             HDMOG4     23
C         K. ADDRT(I)...NET ANNUAL RATE OF ADDITIONS TO COHORT I        HDMOG4     24
C         L. BR...CURRENT ANNUAL BIRTH RATE FOR THE THREE COHORTS THAT  HDMOG4     25
C                 ARE BREEDABLE, IE. MATURE COWS AND BRED AND REPLACMENT HDMOG4     26
C                 HEIFERS                                               HDMOG4     27
C                                                                       HDMOG4     28
C     THE FOLLOWING COHORT NUMBERING IS USED....                        HDMOG4     29
C        COHORT(1) = MATURE COWS                                        HDMOG4     30
C        COHORT(2) = REPLACEMENT HEIFERS                                HDMOG4     31
C        COHORT(3) = BREEDING HEIFERS NOT FOR HERD REPLACEMENT          HDMOG4     32
C        COHORT(4) = MATURE BULLS                                       HDMOG4     33
C        COHORT(5) = YOUNG BULLS                                        HDMOG4     34
C        COHORT(6) = STEERS RAISED FOR SLAUGHTER                        HDMOG4     35
C        COHORT(7) = MALE CALVES                                        HDMOG4     36
C        COHORT(8) = FEMALE CALVES                                      HDMOG4     37
C        COHORT(9) = HEIFERS RAISED FOR SLAUGHTER                       HDMOG4     38
C                                                                       HDMOG4     39
      COMMON/BLOCK/DETPRT,SE_PRT,BEGPRT,PRTCHG,PRTVL1,PRTVL2,DUR,       HDMOG4     40
     1             PLR(9),DR(9),PGRADE(9),TSPRNG,TFALL,WLENGH           HDMOG4     41
      COMMON/SYSVAR/T,DT,KK(9),KNOWS(9),SUBPOP(9,40),POP(9),ROUT(9),    HDMOG4     42
     1             DELAY(9),DELAYP(9)                                   HDMOG4     43
      COMMON/HRDVAL/W(9,40),GRADE(9,40),AGTMAX(9),RIN(9,40),FATFAC,     HDMOG4     44
     1             FMATUR(11),DGAIN(9,40),PARATE(9),TWOLD,TYRLNG        HDMOG4     45
      COMMON/CNTROL/PDSTRB(5,9),CNCAL(9),FEEDAL(9),RHGAL(9),CULFRC(10), HDMOG4     46
     1             TDNR(9),TDNC(9),TDMIR(9),TDMIC(9),AHR(5),MHR(5),     HDMOG4     47
     2             CLDMHR(5),RHGFRC(9,20),CNCFRC(9,20),ACFEED(9,2),     HDMOG4     48
     3             SPLIT,DURB(3),TBRD(3),TFRAC(10,2),ASELL(9),ADDRT(9), HDMOG4     49
     4             C1,C2,C3,C4,C5,C6,C8,C9,C10,C11,TWEAN,TCULL          HDMOG4     50
      COMMON/SAVER4/D,BFRAC(3,31),BR(3),RPOP(3)                         HDMOG4     51
      DIMENSION SAVE(9)                                                 HDMOG4     52
C                                                                       HDMOG4     53
C     COMPUTING PLR AND BIRTH RATES                                     HDMOG4     54
C                                                                       HDMOG4     55
      DO 110 ID = 1,9                                                   HDMOG4     56
      SAVE(ID) = 0.0                                                    HDMOG4     57
      IF(POP(ID).NE.0.0) GO TO 90                                       HDMOG4     58
      IF(ADDRT(ID).LT.0.0) GO TO 90                                     HDMOG4     59
      SAVE(ID) = ADDRT(ID)                                              HDMOG4     60
      GO TO 110                                                         HDMOG4     61
   90 CONTINUE                                                          HDMOG4     62
      PLR(ID) = DR(ID) - ADDRT(ID)/POP(ID)                              HDMOG4     63
      GO TO 110                                                         HDMOG4     64
  100 PLR(ID) = 0.0                                                     HDMOG4     65
  110 CONTINUE                                                          HDMOG4     66
      RPOP(1) = 0.0                                                     HDMOG4     67
      RPOP(2) = 0.0                                                     HDMOG4     68
      RPOP(3) = 0.0                                                     HDMOG4     69
      CALL BIRTH2                                                       HDMOG4     70
      CALVES = BR(1)*RPOP(1) + BR(2)*RPOP(2) + BR(3)*RPOP(3)            HDMOG4     71
C                                                                       HDMOG4     72
C     HERD POPULATION DYNAMICS                                          HDMOG4     73
C                                                                       HDMOG4     74
      RATEIN = C10*ROUT(2) + (1.0 - C11)*ROUT(3)                        HDMOG4     75
      CALL DLVDPL(RATEIN,ROUT(1),RIN,PLR(1),DELAY(1),DELAYP(1),DT,KK(1), HDMOG4     76
     11,9,30)                                                           HDMOG4     77
C                                                                       HDMOG4     78
      RATEIN = C5*ROUT(8)                                               HDMOG4     79
      CALL DVDPLR(RATEIN,ROUT(2),RIN,KK(2),KNOWS,DELAY(2),DT,PLR(2)     HDMOG4     80
     1,2,9,30)                                                          HDMOG4     81
C                                                                       HDMOG4     82
```

```
      RATEIN = (1.0 - C3 - C5 - C9)*ROUT(8)                             HOMOG4     83
      CALL DVDPLR(RATEIN,ROUT(3),RIN,KK(3),KNOWS,DELAY(3),DT,PLR(3),    HOMOG4     84
     13,9,30)                                                           HOMOG4     85
C                                                                       HOMOG4     86
      RATEIN = (1.0 - C6)*ROUT(5)                                       HOMOG4     87
      CALL DLVDPL(RATEIN,ROUT(4),RIN,PLR(4),DELAY(4),DELAYP(4),DT,KK(4), HOMOG4     88
     14,9,30)                                                           HOMOG4     89
C                                                                       HOMOG4     90
      RATEIN = C2*ROUT(7)                                               HOMOG4     91
      CALL DLVDPL(RATEIN,ROUT(5),RIN,PLR(5),DELAY(5),DELAYP(5),DT,KK(5), HOMOG4     92
     15,9,30)                                                           HOMOG4     93
C                                                                       HOMOG4     94
      RATEIN = (1.0 - C2 - C4)*ROUT(7)                                  HOMOG4     95
      CALL DLVDPL(RATEIN,ROUT(6),RIN,PLR(6),DELAY(6),DELAYP(6),DT,KK(6), HOMOG4     96
     16,9,30)                                                           HOMOG4     97
C                                                                       HOMOG4     98
      RATEIN = C3*ROUT(8)                                               HOMOG4     99
      CALL DLVDPL(RATEIN,ROUT(9),RIN,PLR(9),DELAY(9),DELAYP(9),DT,KK(9), HOMOG4    100
     19,9,30)                                                           HOMOG4    101
C                                                                       HOMOG4    102
      RATEIN = (1.0 - C1)*CALVES                                        HOMOG4    103
      CALL DDPLR(RATEIN,ROUT(7),RIN,PLR(7),DT,KK(7),7,9,30)             HOMOG4    104
C                                                                       HOMOG4    105
      RATEIN = C1*CALVES                                                HOMOG4    106
      CALL DDPLR(RATEIN,ROUT(8),RIN,PLR(8),DT,KK(8),8,9,30)             HOMOG4    107
C                                                                       HOMOG4    108
C     CORRECTING POPULATION FOR TRANSFERS WHEN POPULATION HAS BEEN ZERO HOMOG4    109
C                                                                       HOMOG4    110
C                                                                       HOMOG4    111
      DO 30 IE=1,9                                                      HOMOG4    112
      JEUP = KK(IE)                                                     HOMOG4    113
      IF((IE.EQ.2).OR.(IE.EQ.3)) JEUP = KNOWS(IE)                       HOMOG4    114
      RIN(IE,JEUP) = RIN(IE,JEUP) + SAVE(IE)                            HOMOG4    115
   30 CONTINUE                                                          HOMOG4    116
C                                                                       HOMOG4    117
C     COMPUTATION OF SUBPOPULATIONS AND POPULATIONS WITHIN COHORTS      HOMOG4    118
C                                                                       HOMOG4    119
      KMAX = MAX1(KK(1),KK(2),KK(3),KK(4),KK(5),KK(6),KK(7),KK(8),KK(9)) HOMOG4    120
      DO 50 IA=1,9                                                      HOMOG4    121
      DO 40 JA=1,KMAX                                                   HOMOG4    122
      SUBPOP(IA,JA) = 0.0                                               HOMOG4    123
   40 CONTINUE                                                          HOMOG4    124
   50 CONTINUE                                                          HOMOG4    125
      DO 70 IB=1,9                                                      HOMOG4    126
      IF((IB.EQ.2).OR.(IB.EQ.3)) GO TO 70                               HOMOG4    127
      IF((IB.EQ.7).OR.(IB.EQ.8)) GO TO 70                               HOMOG4    128
      KINT = KK(IB)                                                     HOMOG4    129
      A = DELAY(IB)/FLOAT(KINT)                                         HOMOG4    130
      DO 60 JB=1,KINT                                                   HOMOG4    131
      SUBPOP(IB,JB) = A*RIN(IB,KINT+1-JB)                               HOMOG4    132
   60 CONTINUE                                                          HOMOG4    133
   70 CONTINUE                                                          HOMOG4    134
      DO 76 IY=2,3                                                      HOMOG4    135
      JUP = KNOWS(IY)                                                   HOMOG4    136
      IDIFF = KK(IY) - JUP                                              HOMOG4    137
      DO 72 IU=1,JUP                                                    HOMOG4    138
      SUBPOP(IY,IDIFF+IU) = DT*RIN(IY,JUP+1-IU)                         HOMOG4    139
   72 CONTINUE                                                          HOMOG4    140
   76 CONTINUE                                                          HOMOG4    141
      DO 78 IZ=7,8                                                      HOMOG4    142
      IUP = KK(IZ)                                                      HOMOG4    143
      DO 77 IX=1,IUP                                                    HOMOG4    144
      SUBPOP(IZ,IX) = DT*RIN(IZ,IUP+1-IX)                               HOMOG4    145
   77 CONTINUE                                                          HOMOG4    146
   78 CONTINUE                                                          HOMOG4    147
      TPOP = 0.0                                                        HOMOG4    148
      DO 95 IC=1,9                                                      HOMOG4    149
      POP(IC) = 0.0                                                     HOMOG4    150
      LUP = KK(IC)                                                      HOMOG4    151
      DO 80 JC=1,LUP                                                    HOMOG4    152
      POP(IC) = POP(IC) + SUBPOP(IC,JC)                                 HOMOG4    153
   80 CONTINUE                                                          HOMOG4    154
      IF(POP(IC).GE.0.50) GO TO 95                                      HOMOG4    155
      DO 85 LC=1,LUP                                                    HOMOG4    156
      SUBPOP(IC,LC) = 0.0                                               HOMOG4    157
      RIN(IC,LUP + 1 - LC) = 0.0                                        HOMOG4    158
   85 CONTINUE                                                          HOMOG4    159
   95 CONTINUE                                                          HOMOG4    160
                                                                        HOMOG4    161
      RETURN                                                            HOMOG4    162
      END
```

```
      SUBROUTINE INQUIR                                                 INQUIR      2
C        VERSION AS OF 1/10/76                                          INQUIR      3
C                                                                       INQUIR      4
C     THIS SUBROUTINE RECOGNIZES THAT A DECISION POINT HAS BEEN         INQUIR      5
C     REACHED, AND THEN IT PRINTS THE NECESSARY INFORMATION FOR A       INQUIR      6
C     DECISION TO BE MADE. FINALLY IT CREATES THE RESTART FILE TO       INQUIR      7
C     ALLOW THE SIMULATION TO ADVANCE THROUGH TIME TO THE NEXT          INQUIR      8
C     DECISION POINT.                                                   INQUIR      9
C                                                                       INQUIR     10
      COMMON/BLOCK/DETPRT,SE-PRT,BEGPRT,PRTCHG,PRTVL1,PRTVL2,DUR,       INQUIR     11
     1            PLR(9),DR(9),PGRADE(9),TSPRNG,TFALL,WLENGH            INQUIR     12
      COMMON/SYSVAR/T,DT,KK(9),KNOWS(9),SUBPOP(9,40),POP(9),ROUT(9),    INQUIR     13
     1              DELAY(9),DELAYP(9)                                  INQUIR     14
      COMMON/EXPECT/APFUTR(5,20),APPAST(5,5),CPFUTR(20,10),CPPAST(20,5) INQUIR     15
     1              ,BPFUTR(5,10),BPPAST(5,5)                           INQUIR     16
      COMMON/ASSETS/CONVAL(20),ASTVAL(9,30),OLDVAL(10),ASTINC(10),      INQUIR     17
     1              VALCRP(20),OLDCRP(20),CRPINC(20)                    INQUIR     18
      COMMON/FIELD/NSTOCK,FSTOCK(20),STKFED(20),STKPUR(20),PROUAL(20),  INQUIR     19
     1             SPOIL(20),STKLOS(20),FMUAL(20),FRCLOS(20),CPURCH(20),INQUIR     20
     2             CROP(20,2),CROPG(20),CFEED(20,2),CROPOL(20,2)        INQUIR     21
      COMMON/CNTROL/POSTPB(9,9),CNCAL(9),FEEDAL(9),RHGAL(9),CULFRC(10), INQUIR     22
     1              TONE(9),TONC(9),TONIR(9),TONIC(9),AHR(5),MHR(5),    INQUIR     23
     2              OLDMHR(5),RHGFRC(9,20),CNCFRC(9,20),ACFEED(9,2),    INQUIR     24
     3              SPLIT,DURB(3),TB D(5),TE AC(10,2),ASELL(9),ADORT(9), INQUIR     25
     4              C1,C2,C3,C4,C5,C6,C8,C9,C10,C11,TMEAN,TCULL         INQUIR     26
      COMMON/SOURCE/READIN(20,3),READC1(20,10),READC2(20,10),           INQUIR     27
     2              NPOINT,GAP,READC3(20,10),READC4(20,10)              INQUIR     28
      COMMON/MONEY/ASALES(20),OSALES(20),APREV(10),OREV(21),CASH(25),   INQUIR     29
     1             TAGRP(15),TAMP(25),TAXES(15),TAGRPD(15),TAMPD(15),   INQUIR     30
     2             TAXESD(15),NACOST,NCCOST,CAPTL(6),TACASH(15),        INQUIR     31
     3             LVALUE,LIFE,ANRCV(15),APEVD(15),ANCOST(15),          INQUIR     32
     4             ACOST(21),ACOSTD(25),COST(21),TACSHD(15),            INQUIR     33
     5             ASOLD(10),OSOLD(20),SALES,DEBT)                      INQUIR     34
      COMMON/HRDVAL/W(9,40),GRADE(9,40),WGTMAX(9),RIN(9,40),FATFAC,     INQUIR     35
     1              FMATUR(11),DGAIN(9,40),PAWATE(9),IWOLD,TYRLNG       INQUIR     36
      COMMON/ENERGY/TONM,YMILK(7),SMM,DIFM,KP,TCWN,CFE,CFD,ACDMIR(9),   INQUIR     37
     1              ACDMIC(9),RILN(9),CTON(9),HSM,HDIF,KH,HEANHT(2,16), INQUIR     38
     2              PDI(13)                                             INQUIR     39
      COMMON/WEATHR/SOLAR,AVSTMP,RAIN                                   INQUIR     40
      COMMON/REPROD/TURTH(2,16),DEST,GEST,TEST(3,40),BEGCAV,ENDCAV,     INQUIR     41
     1              INTCAV,DT,TEDC,CONCP(5),POPT(11),CPAT(3,40,13),     INQUIR     42
     2              CTIM(3,40,13),CFC,INB(3,40),NR(3),IPREG,LAC,        INQUIR     43
     3              PCC(10,14),PCP(11),WF(10),ICOUNT(2,16),CSM,CDIF,    INQUIR     44
     4              KC,GGEST,PHC(2,10,13),HP(2,16,13),PT(2,16,13),ML,   INQUIR     45
     5              MAXHF(2),HFOUT,AFEST(3,40),WFEST(3,40),FEST(2,16),  INQUIR     46
     6              CONNEW(2,16),XCNT(2),CONEW(2),CLDCP(3,13),MOMX      INQUIR     47
      COMMON/MATERL/SESOPC(10),N-SOPR,OWHEAD,DEFLAT,SP3RED,SPVACC,      INQUIR     48
     1              HRCALV,HRFED1,HRFED2,HRSFED,HRVACC,HRMEAN,HRCULL,   INQUIR     49
     2              HRCAST,HRSEED,HRFERT,HRHRV,HREDIP,HRFCAP,HRMAIN,    INQUIR     50
     3              SPUTL1,SPUTL2,SPUTL3,SPUTL4,SPUTL5,SPSEED,SPFERT,   INQUIR     51
     4              SPREP1,SPREP2,SPREP3,HLEASE                         INQUIR     52
      COMMON/EARTH/ DIGEST(5),GRN(5),LAND(5),NLANDS,SNZERO,SMZERO,      INQUIR     53
     1             STOCKL(5),ACPROD(5)                                  INQUIR     54
      COMMON/PRICES/APRICE(9),BPRICE(9),CPRICE(20)                      INQUIR     55
      COMMON/PRINTS/PR(3,15),NAME(6,2),COHORT(9,2),DISC(9),CNAME(20,2), INQUIR     56
     1              TAXREV,TORREV,DCOUNT,DASSET                         INQUIR     57
      COMMON/FRDATA/BTEMP,RNF,BDGEST(10),MSTOCK(6),QUALTY(11),TEMP(10), INQUIR     58
     1              SWATER(10),WASTEF(6),SOILNT(11)                     INQUIR     59
      COMMON/SAVER1/GROWTH(5,2,10),ACTED(5,20),XCPROD(20),XCQUAL(20),   INQUIR     60
     1              ITER,NCRDPS,IPRINT,ENGLSH,DAYS,NITER,PRTIME,PRTVL,  INQUIR     61
     2              ISTART,IFLAG,LABELF(20),DOFEED(10),DOFTDN(9),       INQUIR     62
     3              CLIMIT(2),FSERCH,PADJST                             INQUIR     63
      COMMON/SAVER2/TAXINC,TAXLIB,TSPACE(20),NSTRT1,NSTRT2,NSTRT3,NSTRT4 INQUIR     64
     1              ,DENOM,TAGHGT,TAFEED,WCAPT,NSTRT5,NSTRT6            INQUIR     65
      COMMON/SAVER3/ROOT(5),SUMTPF,ALGDAY,SM,SNUT(5),GR(5),ROOTOT(5),   INQUIR     66
     1              P(5)                                                INQUIR     67
      COMMON/DIRECT/CFINAL,REMOVL,FRCODG(5),CATTIN(9,2,4),WALTER,       INQUIR     68
     1              AGEMIN,T4HR(5),REACTD(20),FPLANS(4),DISTFD(9,20,4)  INQUIR     69
      COMMON/SAVER4/D,BFRAC(3,20),BR(3),FPOP(3)                         INQUIR     70
      COMMON/SAVER5/SDEBT,SDEBTR,SREPAY,SLOAN,PROTAX,SDEBTO,PRODUC(9)   INQUIR     71
      DIMENSION ARAY01(  37 ),ARAY02( 426 ),ARAY03( 545 ),ARAY04( 361 ) INQUIR     72
      DIMENSION ARAY05( 321 ),ARAY06( 568 ),ARAY07( 862 ),ARAY08( 351 ) INQUIR     73
      DIMENSION ARAY09( 1472),ARAY10(  98 ),ARAY11(   3 ),ARAY12( 5218) INQUIR     74
      DIMENSION ARAY13(   4 ),ARAY14(  28 ),ARAY15(  38 ),ARAY16( 128 ) INQUIR     75
      DIMENSION ARAY17(  66 ),ARAY18( 311 ),ARAY19( 32  ),ARAY20( 28  ) INQUIR     76
      DIMENSION ARAY21( 63. )                                           INQUIR     77
      DIMENSION ARAY22(  97 )                                           INQUIR     78
      DIMENSION ARRYE3(15)                                              INQUIR     79
      EQUIVALENCE(ARAY01(1),DETPRT)                                     INQUIR     80
      EQUIVALENCE(ARAY02(1),T)                                          INQUIR     81
      EQUIVALENCE(ARAY03(1),APFUTR(1,1))                                INQUIR     82
```

```
      EQUIVALENCE(ARAY34(1),CURVAL(1))                                  INQUIR     83
      EQUIVALENCE(ARAY35(1),NSTOCK)                                     INQUIR     84
      EQUIVALENCE(ARAY36(1),POSTRB(1,1))                                INQUIR     85
      EQUIVALENCE(ARAY37(1),READIN(1,1))                                INQUIR     86
      EQUIVALENCE(ARAY38(1),ASALES(1))                                  INQUIR     87
      EQUIVALENCE(ARAY39(1),W(1,1))                                     INQUIR     88
      EQUIVALENCE(ARAY10(1),TONM)                                       INQUIR     89
      EQUIVALENCE(ARAY11(1),SOLAR)                                      INQUIR     90
      EQUIVALENCE(ARAY12(1),TBRTH(1,1))                                 INQUIR     91
      EQUIVALENCE(ARAY13(1),RESORO(1))                                  INQUIR     92
      EQUIVALENCE(ARAY14(1),DIGEST(1))                                  INQUIR     93
      EQUIVALENCE(ARAY15(1),APRICE(1))                                  INQUIR     94
      EQUIVALENCE(ARAY16(1),PRV(1,1))                                   INQUIR     95
      EQUIVALENCE(ARAY17(1),BTEMP)                                      INQUIR     96
      EQUIVALENCE(ARAY18(1),GROWTH(1,1,1))                              INQUIR     97
      EQUIVALENCE(ARAY19(1),TAXINC)                                     INQUIR     98
      EQUIVALENCE(ARAY20(1),ROOT(1))                                    INQUIR     99
      EQUIVALENCE(ARAY21(1),CFINAL)                                     INQUIR    100
      EQUIVALENCE(ARAY22(1),D)                                          INQUIR    101
      EQUIVALENCE(ARAY23(1),SDEBT)                                      INQUIR    102
      REAL LAND,NHR                                                     INQUIR    103
C                                                                       INQUIR    104
      YEAR = T - INT(T + 0.001)                                         INQUIR    105
      DIFF = DT/2.                                                      INQUIR    106
      TCASHF = 0.0                                                      INQUIR    107
      DO 3 ICSH=1,26                                                    INQUIR    108
      TCASHF = TCASHF + CASH(ICSH)                                      INQUIR    109
    3 CONTINUE                                                          INQUIR    110
      RAT = TAGWGT/TAFEED                                               INQUIR    111
C-----------------------------------------------------------------------INQUIR    112
C        SPRING GROWTH ONSET DECISION POINT                             INQUIR    113
C-----------------------------------------------------------------------INQUIR    114
      IFLAG = 0                                                         INQUIR    115
      IF((YEAR.LE.TSPRNG-DIFF).OR.(YEAR.GT.TSPRNG+DIFF)) GO TO 100      INQUIR    116
      IFLAG = 1                                                         INQUIR    117
C                                                                       INQUIR    118
C     STATUS VARIABLE PRINTING                                          INQUIR    119
C                                                                       INQUIR    120
      PRINT1                                                            INQUIR    121
   10 FORMAT(*1*,30X,*SPRING GROWTH DECISION POINT*//)                  INQUIR    122
      PRINT13,T,TSPRNG                                                  INQUIR    123
   13 FORMAT(10X,*CURRENT TIME*F5.3,10X,*ONSET OF SPRING GROWTH*F5.3/)  INQUIR    124
      PRINT16                                                           INQUIR    125
   16 FORMAT(40X,*CATTLE HERD POPULATION DISTRIBUTION*/)                INQUIR    126
      PRINT19,(IE,IE=1,9)                                               INQUIR    127
   19 FORMAT(10X,9(*COHORT*I4)/)                                        INQUIR    128
      DO 25 JA=1,40                                                     INQUIR    129
      PRINT20,(SUBPOP(IA,JA),IA=1,9)                                    INQUIR    130
   20 FORMAT(10X,10F10.0)                                               INQUIR    131
   25 CONTINUE                                                          INQUIR    132
      PRINT30                                                           INQUIR    133
   30 FORMAT(40X,*WEIGHTS OF THE HERD SUBPOPULATIONS*/)                 INQUIR    134
      PRINT19,(IF,IF=1,9)                                               INQUIR    135
      DO 35 JB=1,40                                                     INQUIR    136
      PRINT20,(W(IB,JB),IB=1,9)                                         INQUIR    137
   35 CONTINUE                                                          INQUIR    138
      PRINT40                                                           INQUIR    139
   40 FORMAT(40X,*CURRENT FEED STOCKS*//15X,*NAME*,15X,*STOCK*,         INQUIR    140
     113X,*QUALITY*/)                                                   INQUIR    141
      DO 50 NA=1,NSTOCK                                                 INQUIR    142
      PRINT45,CNAME(NA,1),CNAME(NA,2),FSTOCK(NA),FQUAL(NA)              INQUIR    143
   45 FORMAT(8X,2A8,F11.0,10X,F10.2)                                    INQUIR    144
   50 CONTINUE                                                          INQUIR    145
      PRINT55                                                           INQUIR    146
   55 FORMAT(40X,*EXPECTED CROP AND ANIMAL PRICES*//20X,*CATTLE PRICES* INQUIR    147
     1* ($/KG)*//10X,*      TIME  GRADE 1  GRADE 2  GRADE 3  GRADE 4  * INQUIR    148
     2*GRADE 5*/)                                                       INQUIR    149
      TPR1 = T                                                          INQUIR    150
      DO 60 IC=1,10                                                     INQUIR    151
      PRINT58,TPR1,(APFUTR(JC,IC),JC=1,5)                               INQUIR    152
   58 FORMAT(10X,13F9.3)                                                INQUIR    153
      TPR1 = TPR1 + 2.0*DT                                              INQUIR    154
   60 CONTINUE                                                          INQUIR    155
      PRINT62,(NP,NP=1,8)                                               INQUIR    156
   62 FORMAT(/20X,*PRODUCTION RESOURCE PRICES*//10X,*      TIME*,       INQUIR    157
     18(* RESOURCE*I2)/)                                                INQUIR    158
      TPRIA = T                                                         INQUIR    159
      DO 64 NPA=1,10                                                    INQUIR    160
      PRINT63,TPRIA,(RPFUTR(JPA,NPA),JPA=1,8)                           INQUIR    161
   63 FORMAT(8X,10F10.3)                                                INQUIR    162
      TRPIA = TPRIA + 2.0*DT                                            INQUIR    163
```

```
   64 CONTINUE                                                          INQUIR    164
      PRINT65,(NB,NB=1,NSTOCK)                                          INQUIR    165
   65 FORMAT(20X,*CROP PRICES ($/KG)*//10X,*      TIME*,                INQUIR    166
     110(*    CROP*I2)/)                                                INQUIR    167
      TPR2 = T                                                          INQUIR    168
      DO 70 ID=1,10                                                     INQUIR    169
      PRINT58,TPR2,(CPFUTR(JD,ID),JD=1,NSTOCK)                          INQUIR    170
      TPR2 = TPR2 + 2.0*DT                                              INQUIR    171
   70 CONTINUE                                                          INQUIR    172
      PRINT75,XCPROD(1),XCQUAL(1)                                       INQUIR    173
   75 FORMAT(//10X,*EXPECTED FORAGE PRODUCTION*,F10.3//                 INQUIR    174
     110X,*EXPECTED FORAGE QUALITY    *,F10.2)                          INQUIR    175
      PRINT9.                                                           INQUIR    176
   80 FORMAT(///20X,*DECISION-MAKING CRITERIA*/)                        INQUIR    177
      PRINT85,TAXINC,CAPTL(1),CAPTL(2),TCASHF,WCAPT,RAT                 INQUIR    178
   84 FORMAT(20X,*TAXABLE INCOME THIS YEAR*F10.2//                      INQUIR    179
     125X,*MORTGAGE REMAINING*6X,F10.2//                                INQUIR    180
     225X,*MONTHLY PAYMENT REQUIRED*F10.2//                             INQUIR    181
     325X*CASH FLOW IN THIS YEAR*F10.2//                                INQUIR    182
     425X,*WORKING CAPITAL ON HAND   *F10.2//                           INQUIR    183
     525X,*CURRENT EFFICIENCY MEASURE(PRODUCTION/FEED) = *F10.3/)       INQUIR    184
C                                                                       INQUIR    185
C     EXOGENOUS INPUT REQUIREMENTS NOTICE                               INQUIR    186
C                                                                       INQUIR    187
      PRINT9.                                                           INQUIR    188
   90 FORMAT(*1*,///20X,*EXOGENOUS INPUT REQUIREMENTS IN ORDER*//       INQUIR    189
     125X,*APFUTR(5,20)*/                                               INQUIR    190
     +25X,*BPFUTR(8,10)*/                                               INQUIR    191
     225X,*CPFUTR(NSTOCK,10)*/                                          INQUIR    192
     325X,*POST-MOLARDS,2)*/                                            INQUIR    193
     425X,*COALES(NSTOCK)*/                                             INQUIR    194
     +25X,*STKPOP(NSTOCK)*/                                             INQUIR    195
     525X,*XCPROD(NSTOCK)*/                                             INQUIR    196
     625X,*XCQUAL(NSTOCK)*/                                             INQUIR    197
     725X,*CFINAL      REMOVL*/                                         INQUIR    198
     825X,*TBRD(1),TBRD(2),TMEAN,TCULL*/                                INQUIR    199
     925X,*TMHR(5)*/                                                    INQUIR    200
     +//)                                                               INQUIR    201
      PRINT9.                                                           INQUIR    202
   95 FORMAT(20X,*SEE THE USER GUIDE FOR INPUT FORMATS*)                INQUIR    203
C-----------------------------------------------------------------------INQUIR    204
C        BREEDING DECISION POINT                                        INQUIR    205
C-----------------------------------------------------------------------INQUIR    206
  100 IF((YEAR.LE.TBRD(1)-DIFF).OR.(YEAR.GT.TBRD(1)+DIFF)) GO TO 200    INQUIR    207
      IFLAG = 1                                                         INQUIR    208
C                                                                       INQUIR    209
C     STATUS VARIABLE PRINTING                                          INQUIR    210
C                                                                       INQUIR    211
      PRINT110,T,TBRD(1),TBRD(2)                                        INQUIR    212
  110 FORMAT(*1*,30X,*BREEDING DECISION POINT*//                        INQUIR    213
     110X,*CURRENT TIME*,F5.3,10X,*MATURE COW BREEDING AT*,F5.3,10X,    INQUIR    214
     2*HEIFER BREEDING AT*,F5.3/)                                       INQUIR    215
      PRINT15                                                           INQUIR    216
      PRINT19,(IH,IH=1,9)                                               INQUIR    217
      DO 115 JI=1,40                                                    INQUIR    218
      PRINT20,(SUBPOP(II,JI),II=1,9)                                    INQUIR    219
  115 CONTINUE                                                          INQUIR    220
      JJUP = KK(1)                                                      INQUIR    221
      PRINT120,(JJ,CULFRC(JJ),JJ=1,JJUP)                                INQUIR    222
  120 FORMAT(//15X,*EXPECTED COW CULLING PATTERN*//20X,*SUBPOP*,5X,     INQUIR    223
     1*FRACTION*//10(22X,I2,7X,F8.2/))                                  INQUIR    224
      PRINT59                                                           INQUIR    225
      TPR3 = T                                                          INQUIR    226
      DO 125 IK=1,20                                                    INQUIR    227
      PRINT58,TPR3,(APFUTR(JK,IK),JK=1,5)                               INQUIR    228
      TPR3 = TPR3 + 2.0*DT                                              INQUIR    229
  125 CONTINUE                                                          INQUIR    230
      PRINT62,(NPB,NPB=1,8)                                             INQUIR    231
      TPR3A = T                                                         INQUIR    232
      DO 128 IKA=1,1                                                    INQUIR    233
      PRINT62,TPR3A,(BPFUTR(JKA,IKA),JKA=1,8)                           INQUIR    234
      TPR3A = TPR3A + 2.0*DT                                            INQUIR    235
  128 CONTINUE                                                          INQUIR    236
      PRINT65,(NC,NC=1,NSTOCK)                                          INQUIR    237
      TPR4 = T                                                          INQUIR    238
      DO 130 IL=1,10                                                    INQUIR    239
      PRINT58,TPR4,(CPFUTR(JL,IL),JL=1,NSTOCK)                          INQUIR    240
      TPR4 = TPR4 + 2.0*DT                                              INQUIR    241
  130 CONTINUE                                                          INQUIR    242
      PRINT9.                                                           INQUIR    243
      PRINT84,TAXINC,CAPTL(1),CAPTL(2),TCASHF,WCAPT,RAT                 INQUIR    244
```

```
C                                                                       INQUIR    245
C     EXOGENOUS INPUT REQUIREMENTS NOTICE                               INQUIR    246
C                                                                       INQUIR    247
      PRINT190                                                          INQUIR    248
  190 FORMAT(*1*,20X,*EXOGENOUS INPUT REQUIREMENTS IN ORDER*//          INQUIR    249
     125X,*APFUTR(5,20)*/                                               INQUIR    250
     +25X,*BPFUTR(8,10)*/                                               INQUIR    251
     225X,*CPFUTR(NSTOCK,10)*/                                          INQUIR    252
     325X,*DURB(2)*/                                                    INQUIR    253
     425X,*REACTD(NSTOCK)*/                                             INQUIR    254
     +25X,*FPLANS(4)*/                                                  INQUIR    255
     525X,*CATTIN(9,2,4)*/                                              INQUIR    256
     625X,*DISTFD(9,20,4)*/                                             INQUIR    257
     725X,*TWEAN,TCULL*/                                                INQUIR    258
     +//)                                                               INQUIR    259
      PRINT90                                                           INQUIR    260
  200 IF((YEAR.LE.TBRD(2)-DIFF).OR.(YEAR.GT.TBRD(2)+DIFF)) GO TO 300    INQUIR    261
      IF(IFLAG.EQ.1) GO TO 300                                          INQUIR    262
      IFLAG = 1                                                         INQUIR    263
C                                                                       INQUIR    264
C     STATUS VARIABLE PRINTING                                          INQUIR    265
C                                                                       INQUIR    266
      PRINT210,T,TBRD(1),TBRD(2)                                        INQUIR    267
  210 FORMAT(*1*,3X,*BREEDING DECISION POINT*//                         INQUIR    268
     110X,*CURRENT TIME*,F5.3,10X,*MATURE COW BREEDING AT*,F5.3,10X,    INQUIR    269
     2*HEIFER BREEDING AT*,F5.3/)                                       INQUIR    270
      PRINT15                                                           INQUIR    271
      PRINT19,(IHB,IHB=1,9)                                             INQUIR    272
      DO 215 JIB=1,KK                                                   INQUIR    273
      PRINT20,(SUBPOP(IIB,JIB),IIB=1,9)                                 INQUIR    274
  215 CONTINUE                                                          INQUIR    275
      JJBUP = KK(1)                                                     INQUIR    276
      PRINT120,(JJB,CULFRC(JJB),JJB=1,JJBUP)                            INQUIR    277
      PRINT55                                                           INQUIR    278
      TPR31 = T                                                         INQUIR    279
      DO 225 IKB=1,20                                                   INQUIR    280
      PRINT54,TPR31,(APFUTR(JKB,IKB),JKB=1,5)                           INQUIR    281
      TPR31 = TPR31 + 2.0*DT                                            INQUIR    282
  225 CONTINUE                                                          INQUIR    283
      PRINT60,(NPC,NPC=1,8)                                             INQUIR    284
      TPR31A = T                                                        INQUIR    285
      DO 228 ILR=1,10                                                   INQUIR    286
      PRINT53,TPR31A,(BPFUTR(JLR,ILR),JLR=1,8)                          INQUIR    287
      TPR31A = TPR31A + 2.0*DT                                          INQUIR    288
  228 CONTINUE                                                          INQUIR    289
      PRINT55,(NCB,NCB=1,NSTOCK)                                        INQUIR    290
      TPR41 = T                                                         INQUIR    291
      DO 230 ILB=1,NSTOCK                                               INQUIR    292
      PRINT56,TPR41,(CPFUTR(JLB,ILB),JLB=1,NSTOCK)                      INQUIR    293
      TPR41 = TPR41 + 2.0*DT                                            INQUIR    294
  230 CONTINUE                                                          INQUIR    295
      PRINT95                                                           INQUIR    296
      PRINT94,TAXINC,CAPTL(1),CAPTL(2),TCASHF,WCAPT,RAT                 INQUIR    297
                                                                        INQUIR    298
C     EXOGENOUS INPUT REQUIREMENTS NOTICE                               INQUIR    299
C                                                                       INQUIR    300
      PRINT290                                                          INQUIR    301
  290 FORMAT(*1*,20X,*EXOGENOUS INPUT REQUIREMENTS IN ORDER*//          INQUIR    302
     125X,*APFUTR(5,20)*/                                               INQUIR    303
     +25X,*BPFUTR(8,10)*/                                               INQUIR    304
     225X,*CPFUTR(NSTOCK,10)*/                                          INQUIR    305
     325X,*DURB(2)*/                                                    INQUIR    306
     425X,*REACTD(NSTOCK)*/                                             INQUIR    307
     +25X,*FPLANS(4)*/                                                  INQUIR    308
     525X,*CATTIN(9,2,4)*/                                              INQUIR    309
     625X,*DISTFD(9,20,4)*/                                             INQUIR    310
     725X,*TWEAN,TCULL*/                                                INQUIR    311
     +//)                                                               INQUIR    312
      PRINT95                                                           INQUIR    313
C-----------------------------------------------------------------------INQUIR    314
C        CALF WEANING DECISION POINT                                    INQUIR    315
C-----------------------------------------------------------------------INQUIR    316
  300 IF((YEAR.LE.TWEAN-DIFF).OR.(YEAR.GT.TWEAN+DIFF)) GO TO 400        INQUIR    317
      IFLAG = 1                                                         INQUIR    318
C                                                                       INQUIR    319
C     STATUS VARIABLE PRINTING                                          INQUIR    320
C                                                                       INQUIR    321
      PRINT310,T,TWEAN                                                  INQUIR    322
  310 FORMAT(*1*,3X,*CALF WEANING DECISION POINT*//                     INQUIR    323
     110X,*CURRENT TIME*,F5.3,10X,*CALVES WEANED AT*,F5.3/)             INQUIR    324
      PRINT15                                                           INQUIR    325
```

```
      PRINT19,(IN,IN=1,9)
      DO 315 JM=1,40
      PRINT2.,(SUBPOP(IO,JM),IO=1,9)
  315 CONTINUE
      PRINT8.
      DO 317 IM1=1,4
      PRINT2.,(W(IM2,IM1),IM2=7,8)
  317 CONTINUE
      JPUP = KK(1)
      PRINT120,(JP,CULFRC(JP),JP=1,JPUP)
      PRINT55
      TPR5 = T
      DO 320 IQ=1,10
      PRINT53,TPR5,(APFUTR(JQ,IQ),JQ=1,5)
      TPR5 = TPR5 + 2.0*DT
  320 CONTINUE
      PRINT61,(NPD,NPD=1,8)
      TPR5A = T
      DO 323 IQZ=1,10
      PRINT63,TPR5A,(BPFUTR(JQZ,IQZ),JQZ=1,8)
      TPR5A = TPR5A + 2.0*DT
  323 CONTINUE
      PRINT52,(NF,NF=1,NSTOCK)
      TPR6 = T
      DO 325 IR=1,10
      PRINT53,TPR6,(CPFUTR(JR,IR),JR=1,NSTOCK)
      TPR6 = TPR6 + 2.0*DT
  325 CONTINUE
      PRINT8.
      PRINT8.,TAXINC,CAPTL(1),CAPTL(2),TCASHF,WCAPT,RAT
C
C     EXOGENOUS INPUT REQUIREMENTS NOTICE
C
      PRINT390
  390 FORMAT(*1*,///20X,*EXOGENOUS INPUT REQUIREMENTS IN ORDER*//
     125X,*APFUTR(5,20)*/
     +25X,*BPFUTR(8,10)*/
     225X,*CPFUTR(NSTOCK,10)*/
     325X,*TFRAC(10,2)*/
     425X,*ASEMIN*/
     525X,*C2 C3 C4 C5 C6 C9 C10 C11*/
     625X,*TCULL*/
     +//)
      PRINT95
C-----------------------------------------------------------------------
C         COW CULLING DECISION POINT
C-----------------------------------------------------------------------
  400 IF((YEAR.LE.TCULL-DIFF).OR.(YEAR.GT.TCULL+DIFF)) GO TO 500
      IFLAG = 1
C
C     STATUS VARIABLE PRINTING
C
      PRINT410,T,TCULL
  410 FORMAT(*1*,30X,*COW CULLING DECISION POINT*//
     110X,*CURRENT TIME*,F5.3,10X,*CULLING AT*,F5.3/)
      PRINT18
      PRINT19,(IW,IW=1,4)
      DO 415 JX=1,40
      PRINT2.,(SUBPOP(IX,JX),IX=1,4)
  415 CONTINUE
      PRINT416
  416 FORMAT(//)
      PRINT55
      TPR7 = T
      DO 420 IY=1,5
      PRINT53,TPR7,(APFUTR(JY,IY),JY=1,5)
      TPR7 = TPR7 + 2.0*DT
  420 CONTINUE
      PRINT62,(NPE,NPE=1,8)
      TPR7A = T
      DO 423 IUV=1,10
      PRINT63,TPR7A,(BPFUTR(JUV,IUV),JUV=1,8)
      TPR7A = TPR7A + 2.0*DT
  423 CONTINUE
      PRINT65,(NP,NP=1,NSTOCK)
      TPR8 = T
      DO 425 IZ=1,5
      PRINT53,TPR8,(CPFUTR(JZ,IZ),JZ=1,NSTOCK)
      TPR8 = TPR8 + 2.0*DT
  425 CONTINUE
      PRINT8.
```

```
      PRINT84,TAXINC,CAPTL(1),CAPTL(2),TCASHF,WCAPT,RAT
C
C     EXOGENOUS INPUT REQUIREMENTS NOTICE
C
      PRINT490
  490 FORMAT(*1*///20X,*EXOGENOUS INPUT REQUIREMENTS IN ORDER*//
     125X,*APFUT(5,20)*/
     +25X,*BPFUT(3,11)*/
     225X,*CPFUT(NSTOCK,10)*/
     325X,*CULFRC(KK(2))*/
     425X,*ADDRT(9)*/
     +25X,*PAWATE(9)*/
     525X,*C2 C3 C4 C5 C6 C9 C10 C11*/
     +//)
      PRINT95
C-----------------------------------------------------------------------
C        SPECIAL DECISION POINT
C-----------------------------------------------------------------------
  500 CONTINUE
      IF((YEAR.LE.TFALL+DT-DIFF).OR.(YEAR.GT.TFALL+DT+DIFF)) GO TO 510
      DO 501 NFA=1,NSTOCK
      ACTED(1,NFA) = 0.0
  501 CONTINUE
      TPLAN = T
      JFUTUP = (WLENGH - YEAR + TFALL)/DT + 0.5
      DO 508 JFUT=1,JFUTUP
      TPLAN = TPLAN + DT
      TY = TPLAN - INT(TPLAN + 0.0001)
      IPLAN = 1
      DO 502 ITEST=1,4
      IF(TY.GT.FPLANS(ITEST)) IPLAN = ITEST + 1
  502 CONTINUE
      DO 505 NFA=1,NSTOCK
      SUM1 = SUM2 = 0.0
      FQL = FQUAL(NFA)
      IF(FSTOCK(NFA).EQ.0.0) FQL = PRQUAL(NFA)
      DO 504 IFA=1,9
      IF(LABELF(NFA).EQ.1) ALPHA1 = DISTFD(IFA,NFA,IPLAN)
      IF(LABELF(NFA).EQ.1) ALPHA2 = 0.0
      IF(LABELF(NFA).EQ.2) ALPHA2 = DISTFD(IFA,NFA,IPLAN)
      IF(LABELF(NFA).EQ.2) ALPHA1 = 0.0
      SUM1 = SUM1 + CATTIN(IFA,1,IPLAN)*POP(IFA)*ALPHA1
      SUM2 = SUM2 + CATTIN(IFA,2,IPLAN)*POP(IFA)*ALPHA2
  504 CONTINUE
      ACTED(1,NFA) = ACTED(1,NFA) + DAYS*(SUM1 + SUM2)/FQL
  505 CONTINUE
  508 CONTINUE
      DO 509 NSA=1,NSTOCK
      IF(FSTOCK(NSA).GT.0.0) GO TO 507
      IF(ACTED(1,NSA).GT.0.0) IFLAG = 2
      GO TO 509
  507 CONTINUE
      AB = ABS(ACTED(1,NSA) - FSTOCK(NSA))/FSTOCK(NSA)
      IF(AB.GT.0.15) IFLAG = 2
  509 CONTINUE
  510 CONTINUE
      IPLAN = 1
      DO 511 ITEST=1,4
      IF(YEAR.GT.FPLANS(ITEST)) IPLAN = ITEST + 1
  511 CONTINUE
      DO 512 NSB=1,NSTOCK
      ACTED(2,NSB) = 0.0
  512 CONTINUE
      DO 514 NSC=1,NSTOCK
      SUB1 = SUB2 = 0.0
      FQUL = FQUAL(NSC)
      IF(FSTOCK(NSC).EQ.0.0) FQUL = PRQUAL(NSC)
      DO 513 ISC =1,9
      IF(LABELF(NSC).EQ.1) BETA1 = DISTFD(ISC,NSC,IPLAN)
      IF(LABELF(NSC).EQ.1) BETA2 = 0.0
      IF(LABELF(NSC).EQ.2) BETA2 = DISTFD(ISC,NSC,IPLAN)
      IF(LABELF(NSC).EQ.2) BETA1 = 0.0
      SUB1 = SUB1 + CATTIN(ISC,1,IPLAN)*POP(ISC)*BETA1
      SUB2 = SUB2 + CATTIN(ISC,2,IPLAN)*POP(ISC)*BETA2
  513 CONTINUE
      ACTED(2,NSC) = DAYS*(SUB1 + SUB2)/FQUL
      IF(ACTED(2,NSC)*2.0.GT.FSTOCK(NSC) - STKLOS(NSC)) IFLAG = 2
  514 CONTINUE
      IF(CAPT.LT.0.0) IFLAG = 2
      IF(IFLAG.NE.2) GO TO 800
C
```

```
C     STATUS VARIABLE PRINTING
C
      PRINT515,T
  515 FORMAT(*1*,30X,*SPECIAL DECISION POINT*//
     110X,*CURRENT TIME*F5.3/)
      PRINT16
      PRINT19,(IS,IS=1,9)
      DO 520 JT=1,40
      PRINT20,(SUBPOP(IT,JT),IT=1,9)
  520 CONTINUE
      PRINT416
      PRINT30
      PRINT19,(IU,IU=1,9)
      DO 525 JV=1,40
      PRINT20,(WT(IV,JV),IV=1,9)
  525 CONTINUE
      PRINT416
      PRINT526
  526 FORMAT(20X,*CURRENT FEED STOCKS*//15X,*NAME*,10X,*QUANTITY*,5X,
     1*CON. RQMTS*,5X,*SEA. RQMTS*/)
      DO 530 NX=1,NSTOCK
      PRINT528,CNAME(NX,1),CNAME(NX,2),FSTOCK(NX),ACTED(2,NX),
     1ACTED(1,NX)
  528 FORMAT(8X,2A8,F9.0,F15.0,F15.0)
  530 CONTINUE
      IF((YEAR.LT.TSPRNG).OR.(YEAR.GT.TFALL)) GO TO 547
      PRINT535
  535 FORMAT(/35X,*FORAGE CONDITION DURING GROWTH SEASON*//
     18X,*LAND AREA*,10X,*SIZE*,10X,*QUANTITY*,10X,*QUALITY*,10X,
     2*T. GROWTH*/)
      DO 545 NY=1,NLANDS
      PRINT540,NY,LAND(NY),GRN(NY),DIGEST(NY),ACPROD(NY)
  540 FORMAT(10X,I2,9X,F10.2,8X,F10.0,7X,F10.2,9X,F10.0)
  545 CONTINUE
  547 CONTINUE
      PRINT55
      TPR9 = T
      DO 555 IVB=1,20
      PRINT54,TPR9,(APFUTR(JVB,IVB),JVB=1,5)
      TPR9 = TPR9 + 2.0*DT
  555 CONTINUE
      PRINT62,(NPF,NPF=1,8)
      TPR9A = T
      DO 558 IOU=1,10
      PRINT63,TPR9A,(BPFUTR(JOU,IOU),JOU=1,8)
      TPR9A = TPR9A + 2.0*DT
  558 CONTINUE
      PRINT65,(NZ,NZ=1,NSTOCK)
      TPR10 = T
      DO 560 IVC=1,10
      PRINT58,TPR10,(CPFUTR(JVC,IVC),JVC=1,NSTOCK)
      TPR10 = TPR10 + 2.0*DT
  560 CONTINUE
      PRINT80
      PRINT60,TAXINC,CAPTL(1),CAPTL(2),TCASHF,WCAPT,RAT
C
C     EXOGENOUS INPUTS NOTICE
C
      PRINT590
  590 FORMAT(*1*///20X,*EXOGENOUS INPUT REQUIREMENTS IN ORDER*//
     125X,*APFUTR(5,20)*/
     +25X,*BPFUTR(8,10)*/
     225X,*CPFUTR(NSTOCK,10)*/
     325X,*POSTRB(NLANDS,9)*/
     525X,*CULFAC(KK(1))*/
     625X,*ADORT(9)*/
     +25X,*PAWATE(9)*/
     725X,*C1,C3,C4,C5,C6,C9,C10,C11*/
     825X,*TMEAN,TCULL,TBRD(1),TBRD(2)*/
     925X,*FPLANS(4)*/
     +25X,*CATTIN(9,2,4)*/
     +25X,*DISTFU(9,21,4)*/
     +25X,*CSALES(NSTOCK)*/
     125X,*STKPUR(NSTOCK)*/
     225X,*REACTU(NSTOCK)*/
     325X,*SLOAN,SUBBTR,SREPAY*/
     425X,*TMRP(4)*/
     525X,*CFINAL     REMOVL*/
     +//)
      PRINT95
  800 IF(IFLAG.EQ.0) RETURN
```

```
C                                                                       INQUIR    569
C-----ALL VARIABLES BUFFERED OUT AS BINARY DATA TO BE CATALOGED          INQUIR    570
C                                                                       INQUIR    571
      BUFFER OUT(5,1) (ARAY01(1),ARAY01(37))                            INQUIR    572
      IF(UNIT(5)) 810,1000,1000                                         INQUIR    573
  810 BUFFER OUT(5,1) (ARAY02(1),ARAY02(416))                           INQUIR    574
      IF(UNIT(5)) 820,1010,1010                                         INQUIR    575
  820 BUFFER OUT(5,1) (ARAY03(1),ARAY03(545))                           INQUIR    576
      IF(UNIT(5)) 830,1020,1020                                         INQUIR    577
  830 BUFFER OUT(5,1) (ARAY04(1),ARAY04(361))                           INQUIR    578
      IF(UNIT(5)) 840,1030,1030                                         INQUIR    579
  840 BUFFER OUT(5,1) (ARAY05(1),ARAY05(321))                           INQUIR    580
      IF(UNIT(5)) 850,1040,1040                                         INQUIR    581
  850 BUFFER OUT(5,1) (ARAY06(1),ARAY06(568))                           INQUIR    582
      IF(UNIT(5)) 860,1050,1050                                         INQUIR    583
  860 BUFFER OUT(5,1) (ARAY07(1),ARAY07(862))                           INQUIR    584
      IF(UNIT(5)) 870,1060,1060                                         INQUIR    585
  870 BUFFER OUT(5,1) (ARAY08(1),ARAY08(351))                           INQUIR    586
      IF(UNIT(5)) 880,1070,1070                                         INQUIR    587
  880 BUFFER OUT(5,1) (ARAY09(1),ARAY09(1472))                          INQUIR    588
      IF(UNIT(5)) 890,1080,1080                                         INQUIR    589
  890 BUFFER OUT(5,1) (ARAY10(1),ARAY10(98))                            INQUIR    590
      IF(UNIT(5)) 900,1090,1090                                         INQUIR    591
  900 BUFFER OUT(5,1) (ARAY11(1),ARAY11(3))                             INQUIR    592
      IF(UNIT(5)) 910,1100,1100                                         INQUIR    593
  910 BUFFER OUT(5,1) (ARAY12(1),ARAY12(5218))                          INQUIR    594
      IF(UNIT(5)) 920,1110,1110                                         INQUIR    595
  920 BUFFER OUT(5,1) (ARAY13(1),ARAY13(4.))                            INQUIR    596
      IF(UNIT(5)) 930,1120,1120                                         INQUIR    597
  930 BUFFER OUT(5,1) (ARAY14(1),ARAY14(28))                            INQUIR    598
      IF(UNIT(5)) 940,1130,1130                                         INQUIR    599
  940 BUFFER OUT(5,1) (ARAY15(1),ARAY15(38))                            INQUIR    600
      IF(UNIT(5)) 950,1140,1140                                         INQUIR    601
  950 BUFFER OUT(5,1) (ARAY16(1),ARAY16(128))                           INQUIR    602
      IF(UNIT(5)) 960,1150,1150                                         INQUIR    603
  960 BUFFER OUT(5,1) (ARAY17(1),ARAY17(65))                            INQUIR    604
      IF(UNIT(5)) 970,1160,1160                                         INQUIR    605
  970 BUFFER OUT(5,1) (ARAY18(1),ARAY18(311))                           INQUIR    606
      IF(UNIT(5)) 980,1170,1170                                         INQUIR    607
  980 BUFFER OUT(5,1) (ARAY19(1),ARAY19(32))                            INQUIR    608
      IF(UNIT(5)) 990,1180,1180                                         INQUIR    609
  990 BUFFER OUT(5,1) (ARAY20(1),ARAY20(28))                            INQUIR    610
      IF(UNIT(5)) 992,1190,1190                                         INQUIR    611
  992 BUFFER OUT(5,1) (ARAY21(1),ARAY21(830))                           INQUIR    612
      IF(UNIT(5)) 994,1200,1200                                         INQUIR    613
  994 BUFFER OUT(5,1) (ARAY22(1),ARAY22(97))                            INQUIR    614
      IF(UNIT(5)) 996,1210,1210                                         INQUIR    615
  996 BUFFER OUT(5,1) (ARAY23(1),ARAY23(15))                            INQUIR    616
      IF(UNIT(5)) 998,1220,1220                                         INQUIR    617
  998 PRINT999                                                          INQUIR    618
  999 FORMAT(//////*    ALL ARAYS WRITTEN OUT SUCCESSFULLY*)            INQUIR    619
      STOP                                                              INQUIR    620
 1000 PRINT1005                                                         INQUIR    621
 1005 FORMAT(*1*,*ARAY01 NOT BUFFERED OUT CORRECTLY*)                   INQUIR    622
      STOP                                                              INQUIR    623
 1010 PRINT1015                                                         INQUIR    624
 1015 FORMAT(*1*,*ARAY02 NOT BUFFERED OUT CORRECTLY*)                   INQUIR    625
      STOP                                                              INQUIR    626
 1020 PRINT1025                                                         INQUIR    627
 1025 FORMAT(*1*,*ARAY03 NOT BUFFERED OUT CORRECTLY*)                   INQUIR    628
      STOP                                                              INQUIR    629
 1030 PRINT1035                                                         INQUIR    630
 1035 FORMAT(*1*,*ARAY04 NOT BUFFERED OUT CORRECTLY*)                   INQUIR    631
      STOP                                                              INQUIR    632
 1040 PRINT1045                                                         INQUIR    633
 1045 FORMAT(*1*,*ARAY05 NOT BUFFERED OUT CORRECTLY*)                   INQUIR    634
      STOP                                                              INQUIR    635
 1050 PRINT1055                                                         INQUIR    636
 1055 FORMAT(*1*,*ARAY06 NOT BUFFERED OUT CORRECTLY*)                   INQUIR    637
      STOP                                                              INQUIR    638
 1060 PRINT1065                                                         INQUIR    639
 1065 FORMAT(*1*,*ARAY07 NOT BUFFERED OUT CORRECTLY*)                   INQUIR    640
      STOP                                                              INQUIR    641
 1070 PRINT1075                                                         INQUIR    642
 1075 FORMAT(*1*,*ARAY08 NOT BUFFERED OUT CORRECTLY*)                   INQUIR    643
      STOP                                                              INQUIR    644
 1080 PRINT1085                                                         INQUIR    645
 1085 FORMAT(*1*,*ARAY09 NOT BUFFERED OUT CORRECTLY*)                   INQUIR    646
      STOP                                                              INQUIR    647
 1090 PRINT1095                                                         INQUIR    648
 1095 FORMAT(*1*,*ARAY10 NOT BUFFERED OUT CORRECTLY*)                   INQUIR    649
```

```
      STOP                                                              INQUIR    650
1100  PRINT1105                                                         INQUIR    651
1105  FORMAT(*1*,*ARAY11 NOT BUFFERED OUT CORRECTLY*)                   INQUIR    652
      STOP                                                              INQUIR    653
1110  PRINT1115                                                         INQUIR    654
1115  FORMAT(*1*,*ARAY12 NOT BUFFERED OUT CORRECTLY*)                   INQUIR    655
      STOP                                                              INQUIR    656
1120  PRINT1125                                                         INQUIR    657
1125  FORMAT(*1*,*ARAY13 NOT BUFFERED OUT CORRECTLY*)                   INQUIR    658
      STOP                                                              INQUIR    659
1130  PRINT1135                                                         INQUIR    660
1135  FORMAT(*1*,*ARAY14 NOT BUFFERED OUT CORRECTLY*)                   INQUIR    661
      STOP                                                              INQUIR    662
1140  PRINT1145                                                         INQUIR    663
1145  FORMAT(*1*,*ARAY15 NOT BUFFERED OUT CORRECTLY*)                   INQUIR    664
      STOP                                                              INQUIR    665
1150  PRINT1155                                                         INQUIR    666
1155  FORMAT(*1*,*ARAY16 NOT BUFFERED OUT CORRECTLY*)                   INQUIR    667
      STOP                                                              INQUIR    668
1160  PRINT1165                                                         INQUIR    669
1165  FORMAT(*1*,*ARAY17 NOT BUFFERED OUT CORRECTLY*)                   INQUIR    670
      STOP                                                              INQUIR    671
1170  PRINT1175                                                         INQUIR    672
1175  FORMAT(*1*,*ARAY18 NOT BUFFERED OUT CORRECTLY*)                   INQUIR    673
      STOP                                                              INQUIR    674
1180  PRINT1185                                                         INQUIR    675
1185  FORMAT(*1*,*ARAY19 NOT BUFFERED OUT CORRECTLY*)                   INQUIR    676
      STOP                                                              INQUIR    677
1190  PRINT1195                                                         INQUIR    678
1195  FORMAT(*1*,*ARAY20 NOT BUFFERED OUT CORRECTLY*)                   INQUIR    679
      STOP                                                              INQUIR    680
1200  PRINT1205                                                         INQUIR    681
1205  FORMAT(*1*,*ARAY21 NOT BUFFERED OUT CORRECTLY*)                   INQUIR    682
      STOP                                                              INQUIR    683
1210  PRINT1215                                                         INQUIR    684
1215  FORMAT(*1*,*ARAY22 NOT BUFFERED OUT CORRECTLY*)                   INQUIR    685
      STOP                                                              INQUIR    686
1220  PRINT1225                                                         INQUIR    687
1225  FORMAT(*1*,*ARAY23 NOT BUFFERED OUT CORRECTLY*)                   INQUIR    688
      STOP                                                              INQUIR    689
      END                                                               INQUIR    690
```

```
      SUBROUTINE NORMAL                                                 NORMAL     2
C        VERSION AS OF 1/5/75                                           NORMAL     3
C                                                                       NORMAL     4
C     THIS SUBROUTINE PERFORMS ALL MANAGEMENT FUNCTIONS WHICH CAN BE    NORMAL     5
C     ACCOMPLISHED WITHOUT EXOGENOUS INPUT OF CONTROL VARIABLES.        NORMAL     6
C                                                                       NORMAL     7
C     THE FOLLOWING FUNCTIONS ARE PERFORMED....                         NORMAL     8
C                                                                       NORMAL     9
C        1. SALES OF SLAUGHTER COHORTS                                  NORMAL    10
C        2. MECHANICAL HARVESTING OF FORAGE GROWTH                      NORMAL    11
C        3. CROP PURCHASES AND SALES AT T = TFALL                       NORMAL    12
C        4. ASSIGNMENT OF FEEDAL AND CNCAL VALUES DURING WINTER FEEDING NORMAL    13
C                                                                       NORMAL    14
C-----THE FOLLOWING CONTROL VARIABLES ARE USED....                      NORMAL    15
C                                                                       NORMAL    16
C        ADDRT(I) = NET ANNUAL RATE OF ADDITIONS TO COHORT I            NORMAL    17
C        AGEMIN = THE MINIMUM AGE FOR WEANING TO BE PERFORMED           NORMAL    18
C        CFINAL = PROPORTION OF FORAGE IN THE FIELD HARVESTED AT TFALL  NORMAL    19
C        CNCAL(I) = CONCENTRATE ALLOCATION TO COHORT I                  NORMAL    20
C        CNCFRC(I,N) = FRACTION OF CONCENTRATE ALLOCATION FROM CROP N   NORMAL    21
C        CSALES(N) = AMOUNT OF CROP N SOLD THIS PERIOD                  NORMAL    22
C        DGAIN(I,J) = DESIRED DAILY GAIN RATE FOR SUBPOP(I,J)           NORMAL    23
C        FEEDAL(I) = ROUGHAGE ALLOCATION FROM FEED STOCKS FOR COHORT I  NORMAL    24
C        MHR(NL) = MECHANICAL HARVEST RATE FOR LAND AREA NL             NORMAL    25
C        PDSTRB(NL,I) = FRACTION OF COHORT I POPULATION GRAZING IN A. NL NORMAL   26
C        REACTD(N) = NET PURCHASES OF FEED STOCKS N THIS TIME PERIOD    NORMAL    27
C        REMOVL = FRACTION OF FORAGE ABOVE HERD NEEDS TO BE HARVESTED   NORMAL    28
C        RHGFRC(I,N) = FRACTION OF ROUGHAGE ALLOCATION FROM CROP N      NORMAL    29
C        STKPUR(N) = PURCHASES OF FEED STOCK N THIS PERIOD              NORMAL    30
C        TMHR(NH) = TIMES THAT FORAGE IS TO BE MECHANICALLY HARVESTED   NORMAL    31
C                                                                       NORMAL    32
C-----END OF VARIABLE LIST                                              NORMAL    33
C                                                                       NORMAL    34
      COMMON/BLOCK/DETPRT,SE.PRT,BEGPRT,PRTCHG,PRTVL1,PRTVL2,DUR,       NORMAL    35
     1            PLR(9),DR(9),PGRADE(9),TSPRNG,TFALL,WLENGH            NORMAL    36
      COMMON/SYSVAR/T,DT,KK(9),KNOWS(9),SUBPOP(9,40),POP(9),ROUT(9),    NORMAL    37
     1            DELAY(9),DELAYP(9)                                    NORMAL    38
      COMMON/FIELD/NSTOCK,FSTOCK(20),STKFED(20),STKPUR(20),PRQUAL(20),  NORMAL    39
     1            SPOIL(20),STKLOS(20),FQUAL(20),FRCLOS(20),CPURCH(20), NORMAL    40
     2            CROP(20,2),CROPG(20),CFEED(20,2),CROPOL(20,2)         NORMAL    41
      COMMON/CNTROL/PDSTRB(5,9),CNCAL(9),FEEDAL(9),RHGAL(9),CULFRC(10), NORMAL    42
     1              TDNR(9),TDNC(9),TDMIR(9),TDMIC(9),AHF(5),MHR(5),    NORMAL    43
     2              OLDMHR(5),RHGFRC(9,20),CNCFRC(9,20),ACFEED(9,2),    NORMAL    44
     3              SPLIT,DUR3(3),TDRD(3),TFFAC(10,2),ASELL(9),ADDRT(9), NORMAL   45
     4              C1,C2,C3,C4,C5,C6,C8,C9,C10,C11,TWEAN,TCULL         NORMAL    46
      COMMON/PRICES/APRICE(9),BPRICE(9),CPRICE(20)                      NORMAL    47
      COMMON/MONEY/ASALES(10),CSALES(20),AREV(10),CREV(21),CASH(26),    NORMAL    48
     1            TAGRP(15),TANP(15),TAXES(15),TAGRPO(15),TANPO(15),    NORMAL    49
     2            TAXESO(15),NACOST,NCCOST,CAPTL(5),TACASH(15),         NORMAL    50
     3            LVALUE,LIFE,ANREV(15),AREVO(15),ANCOST(15),           NORMAL    51
     4            ACOST(21),ACOSTO(15),CCOST(21),TACSHO(15),            NORMAL    52
     5            ASOLD(10),CSOLD(20),SALES,DEBTO                       NORMAL    53
      COMMON/DIRECT/CFINAL,REMOVL,FRLOSS(5),CATTIN(9,2,4),NALTER,       NORMAL    54
     1              AGEMIN,TMHR(5),REACTD(20),FPLANS(4),DISTFD(9,20,4)  NORMAL    55
      COMMON/EARTH/DIGEST(5),GRN(5),LAND(5),NLANDS,SNZERO,SMZERO,       NORMAL    56
     1            STOCKL(5),ACPROD(5)                                   NORMAL    57
      COMMON/HRDVAL/W(9,40),GRADE(9,40),WGTMAX(9),RIN(9,40),FATFAC,     NORMAL    58
     1              FMATUR(10),DGAIN(9,40),PAWATE(9),TWOLD,TYRLNG       NORMAL    59
      COMMON/MATERL/RESORG(10),NRSCRL,OVHEAD,DEFLAT,SPDFED,SPVACC,      NORMAL    60
     1              HRCALV,HRFED1,HRFED2,HRDFED,HRVACC,HRWEAN,HRCULL,   NORMAL    61
     2              HRCAST,HRSEED,HRFERT,HRHARV,HRECIP,HRECAP,HRMAIN,   NORMAL    62
     3              SPUTL1,SPUTL2,SPUTL3,SPUTL4,SPUTL5,SPSEED,SPFERT,   NORMAL    63
     4              SPREP1,SPREP2,SPREP3,HLEASE                         NORMAL    64
      COMMON/SAVER1/GROWTH(5,2,10),ACTED(5,20),XCPROD(20),XCQUAL(20),   NORMAL    65
     1              ITER,NCROPS,IPRINT,ENGLSH,DAYS,NITER,PRTIME,PRTVL,  NORMAL    66
     2              ISTART,IFLAG,LABELF(20),DDFEED(10),DDFTON(9),       NORMAL    67
     3              CLIMIT(20),FSERCH,PADJST                            NORMAL    68
      DIMENSION AG(2),BG(2)                                             NORMAL    69
      REAL MHR,LAND                                                     NORMAL    70
      INTEGER GRADE                                                     NORMAL    71
      DATA AG/.00684,.01265/                                            NORMAL    72
      DATA BG/.05272,.05603/                                            NORMAL    73
C                                                                       NORMAL    74
      YEAR = T - INT(T + 0.001)                                         NORMAL    75
      DAYS = 365.0*DT                                                   NORMAL    76
      DIFF = DT/2.                                                      NORMAL    77
C                                                                       NORMAL    78
C-----DETERMINATION OF SALES IN SLAUGHTER COHORTS----------------------- NORMAL    79
C                                                                       NORMAL    80
      JPLAN = 1                                                         NORMAL    81
      DO 1 LPA = 1,4                                                    NORMAL    82
```

```
      IF(YEAR.GT.FPLANS(LPA)) JPLAN = LPA + 1                           NORMAL     83
    1 CONTINUE                                                          NORMAL     84
      DO 50 I=1,2                                                       NORMAL     85
      IF(I.EQ.1) IA = 5                                                 NORMAL     86
      IF(I.EQ.2) IA = 9                                                 NORMAL     87
      IF(POP(IA).EQ.0.0) GO TO 50                                       NORMAL     88
      CVAL = 0.0                                                        NORMAL     89
      TC = TR = 0.0                                                     NORMAL     90
      SUMMA = SUMMB = 0.0                                               NORMAL     91
      DO 3 NTA=1,NSTOCK                                                 NORMAL     92
      FQ = FQUAL(NTA)                                                   NORMAL     93
      IF(FSTOCK(NTA).LE.0.0) FQ = PRQUAL(NTA)                           NORMAL     94
      IF(LABELF(NTA).NE.1) GO TO 2                                      NORMAL     95
      CINT = CATTIN(IA,1,JPLAN)*DISTFD(IA,NTA,JPLAN)/FQ                 NORMAL     96
      SUMMA = SUMMA + CINT                                              NORMAL     97
      TC = TC + CINT*FQ                                                 NORMAL     98
      CVAL = CVAL + CINT*CPRICE(NTA)                                    NORMAL     99
      GO TO 3                                                           NORMAL    100
    2 RINT = CATTIN(IA,2,JPLAN)*DISTFD(IA,NTA,JPLAN)/FQ                 NORMAL    101
      SUMMB = SUMMB + RINT                                              NORMAL    102
      TR = TR + RINT*FQ                                                 NORMAL    103
      CVAL = CVAL + RINT*CPRICE(NTA)                                    NORMAL    104
    3 CONTINUE                                                          NORMAL    105
      CAL = SUMMA*DAYS                                                  NORMAL    106
      IF(CAL.GT.0.0) GO TO 4                                            NORMAL    107
      CTD = 0.0                                                         NORMAL    108
      GO TO 5                                                           NORMAL    109
    4 CTD = TC/CAL                                                      NORMAL    110
    5 FAL = SUMMB*DAYS                                                  NORMAL    111
      IF(FAL.GT.0.0) GO TO 6                                            NORMAL    112
      RTD = 0.0                                                         NORMAL    113
      GO TO 7                                                           NORMAL    114
    6 RTD = TR/FAL                                                      NORMAL    115
    7 FALOLD = FAL                                                      NORMAL    116
      IF((YEAR.LT.TSPRNG-DIFF).OR.(YEAR.GT.TFALL+DIFF)) GO TO 9         NORMAL    117
      DGST = 0.0                                                        NORMAL    118
      DO 8 NL=1,NLANDS                                                  NORMAL    119
      FAL = FAL + POSTRB(IA,NL)*GRN(NL)/POP(IA)/DAYS                    NORMAL    120
      DGST = DGST + POSTRB(IA,NL)*GRN(NL)*DIGEST(NL)/POP(IA)/DAYS       NORMAL    121
    8 CONTINUE                                                          NORMAL    122
      IF(FAL.EQ.FALOLD) GO TO 12                                        NORMAL    123
      DGST = DGST/(FAL-FALOLD)                                          NORMAL    124
   12 CONTINUE                                                          NORMAL    125
      RTD = (FALOLD*RTD + (FAL - FALOLD)*DGST)/FAL                      NORMAL    126
    9 ALLOC = CAL + FAL                                                 NORMAL    127
      ALTON = (CAL*CTD + FAL*RTD)/ALLOC                                 NORMAL    128
      CALL CNVRT(ALTON,EMAIN,EGAIN)                                     NORMAL    129
C-----THE NET REVENUE OF INCREMENTAL WEIGHT GAIN THIS PERIOD            NORMAL    130
      FTIME = T + DT                                                    NORMAL    131
      FREV = 0.0                                                        NORMAL    132
      FWGT = 0.0                                                        NORMAL    133
      JAUP = KK(IA)                                                     NORMAL    134
      DO 10 JA=1,JAUP                                                   NORMAL    135
      IF(SUBPOP(IA,JA).LT.0.1) GO TO 10                                 NORMAL    136
      DMIMAX = 0.025*W(IA,JA)                                           NORMAL    137
      DMI = AMIN1(DMIMAX,ALLOC)                                         NORMAL    138
      WMET = W(IA,JA)**0.75                                             NORMAL    139
      EG = (DMI - (0.077*WMET/EMAIN))*EGAIN                             NORMAL    140
      IF(IA.EQ.9) GO TO 13                                              NORMAL    141
      DGN = 0.0                                                         NORMAL    142
      IF(EG.LT.0.0) GO TO 10                                            NORMAL    143
      SQTEMP = 0.002779 + (0.02736*EG/WMET)                             NORMAL    144
      DGN = (SQRT(SQTEMP) - 0.05272)/0.01369                            NORMAL    145
      GO TO 15                                                          NORMAL    146
   13 DGN = 0.0                                                         NORMAL    147
      IF(EG.LT.0.0) GO TO 10                                            NORMAL    148
      SQTEMP = 0.003139 + (0.0506*EG/WMET)                              NORMAL    149
      DGN = (SQRT(SQTEMP) - 0.0506)/0.0253                              NORMAL    150
   15 WG = DGN*DAYS*SUBPOP(IA,JA)                                       NORMAL    151
      FWGT = FWGT + WG                                                  NORMAL    152
      FREV = FREV + WG*XPECTA(GRADE(IA,JA),FTIME)                       NORMAL    153
   10 CONTINUE                                                          NORMAL    154
      SUM = 0.0                                                         NORMAL    155
      FCOST1 = CVAL*DAYS*POP(IA)                                        NORMAL    156
      FCOST2 = HREFD1*(CAL + FALOLD)*POP(IA)*DAYS*BPRICE(1)             NORMAL    157
      AUDRT(IA) = 0.0                                                   NORMAL    158
      IF((FREV/1.10).GT.(FCOST1+FCOST2)) GO TO 50                       NORMAL    159
C-----SEARCHING FUTURE EXPECTATIONS FOR A HIGHER PRICE                  NORMAL    160
      PBEST = APRICE(3)                                                 NORMAL    161
      TBEST = T                                                         NORMAL    162
      TNOW = T                                                          NORMAL    163
```

```
      LAUP = INT(FSERCH)                                                NORMAL
      DO 30 LA=1,LAUP                                                   NORMAL
      TTHEN = TNOW + FLOAT(LA)*DT                                       NORMAL
      PTHEN = XPECTA(3,TTHEN)                                           NORMAL
      IF(PTHEN.LE.PBEST) GO TO 30                                       NORMAL
      PBEST = PTHEN                                                     NORMAL
      TBEST = TTHEN                                                     NORMAL
   30 CONTINUE                                                          NORMAL
      IF(TBEST.GT.T+DT) GO TO 50                                        NORMAL
C-----SELLING THE CATTLE IF NET LOSS OCCURS NOW, AND NO BETTER PRICE    NORMAL
      ADORT(IA) = -POP(IA)*(1.0 - DR(IA)*DT)/DT                         NORMAL
   50 CONTINUE                                                          NORMAL
C                                                                       NORMAL
C-----CROP PURCHASES AND SALES AFTER FALL HARVEST----------------------- NORMAL
C                                                                       NORMAL
      IF((YEAR.LE.TFALL-DIFF).OR.(YEAR.GT.TFALL+DIFF)) GO TO 150        NORMAL
      DO 105 NM=1,NSTOCK                                                NORMAL
      CSALES(NM) = 0.0                                                  NORMAL
      STKPUR(NM) = 0.0                                                  NORMAL
      IF(REACTD(NM).LT.0.0) CSALES(NM) = -REACTD(NM)                    NORMAL
      IF(REACTD(NM).GT.0.0) STKPUR(NM) = REACTD(NM)                     NORMAL
  105 CONTINUE                                                          NORMAL
  150 CONTINUE                                                          NORMAL
C                                                                       NORMAL
C-----MECHANICAL HARVESTING OF FORAGE GROWTH--------------------------- NORMAL
C                                                                       NORMAL
      DO 205 NC=1,NLANDS                                                NORMAL
      MHR(NC) = 0.0                                                     NORMAL
      OLDMHR(NC) = MHR(NC)                                              NORMAL
  205 CONTINUE                                                          NORMAL
      IF((YEAR.LT.TSPRNG-DIFF).OR.(YEAR.GT.TFALL-DIFF)) GO TO 224       NORMAL
      DO 223 KHARV = 1,5                                                NORMAL
      IF((YEAR.LE.TMHR(KHARV)-DIFF).OR.(YEAR.GT.TMHR(KHARV)+DIFF))      NORMAL
     1       GO TO 223                                                  NORMAL
      DO 220 NA=1,NLANDS                                                NORMAL
      SUMANL = 0.0                                                      NORMAL
      DO 210 IA=1,9                                                     NORMAL
      SUMANL = SUMANL + POSTRB(NA,IA)*POP(IA)                           NORMAL
  210 CONTINUE                                                          NORMAL
      MHR(NA) = 0.0                                                     NORMAL
      FLEVEL = SUMANL*5.0*DAYS                                          NORMAL
      IF(GRN(NA).LT.FLEVEL) GO TO 220                                   NORMAL
      EXCESS = GRN(NA) - FLEVEL                                         NORMAL
      MHR(NA) = REMOVL*EXCESS/DAYS                                      NORMAL
      OLDMHR(NA) = MHR(NA)                                              NORMAL
  220 CONTINUE                                                          NORMAL
  223 CONTINUE                                                          NORMAL
  224 CONTINUE                                                          NORMAL
      IF((YEAR.LE.TFALL-DIFF).OR.(YEAR.GT.TFALL+DIFF)) GO TO 230        NORMAL
      DO 225 NB=1,NLANDS                                                NORMAL
      MHR(NB) =  GRN(NB)*CFINAL/DAYS                                    NORMAL
      OLDMHR(NB) = MHR(NB)                                              NORMAL
  225 CONTINUE                                                          NORMAL
  230 CONTINUE                                                          NORMAL
      DO 250 NZ=1,NLANDS                                                NORMAL
      TOTAL = 0.0                                                       NORMAL
      DO 240 IZ=1,9                                                     NORMAL
      TOTAL = TOTAL + POSTRB(NZ,IZ)*POP(IZ)                             NORMAL
  240 CONTINUE                                                          NORMAL
      STOCKL(NZ) = TOTAL/LAND(NZ)                                       NORMAL
  250 CONTINUE                                                          NORMAL
C                                                                       NORMAL
C-----ASSIGNMENT OF ROUGHAGE AND CONCENTRATE ALLOCATIONS---------------- NORMAL
C                                                                       NORMAL
      DO 310 ID=1,9                                                     NORMAL
      CNCAL(ID) = 0.0                                                   NORMAL
      FEEDAL(ID) = 0.0                                                  NORMAL
  310 CONTINUE                                                          NORMAL
      IAVOID = 1                                                        NORMAL
      LPLAN = 1                                                         NORMAL
      DO 312 LLT=1,4                                                    NORMAL
      IF(YEAR.GT.FPLANS(LLT)) LPLAN = LLT + 1                           NORMAL
  312 CONTINUE                                                          NORMAL
      DO 315 NU=1,NSTOCK                                                NORMAL
      DO 314 IU=1,9                                                     NORMAL
      CNCFRC(IU,NU) = 0.0                                               NORMAL
      RHGFRC(IU,NU) = 0.0                                               NORMAL
      IF(LABELF(NU).EQ.1) CNCFRC(IU,NU) = DISTFD(IU,NU,LPLAN)           NORMAL
      IF(LABELF(NU).EQ.2) RHGFRC(IU,NU) = DISTFD(IU,NU,LPLAN)           NORMAL
      IF(NU.GT.1) GO TO 314                                             NORMAL
      ACFEED(IU,1) = CATTIN(IU,1,LPLAN)                                 NORMAL
```

```
      ACFEED(IU,2) = CATTIN(IU,2,LPLAN)                                 NORMAL
  314 CONTINUE                                                          NORMAL
  315 CONTINUE                                                          NORMAL
  316 CONTINUE                                                          NORMAL
      DO 320 IV=1,9                                                     NORMAL
      SUM1 = SUM2 = 0.0                                                 NORMAL
      DO 317 NV=1,NSTOCK                                                NORMAL
      FQL = FEQUAL(NV)                                                  NORMAL
      IF(FSTOCK(NV).LE.0.0) FQL = PEQUAL(NV)                            NORMAL
      SUM1 = SUM1 + ACFEED(IV,1)*RHGFRC(IV,NV)/FQL                      NORMAL
      SUM2 = SUM2 + ACFEED(IV,2)*RHGFRC(IV,NV)/FQL                      NORMAL
  317 CONTINUE                                                          NORMAL
      CNCAL(IV) = SUM1*POP(IV)*DAYS                                     NORMAL
      FEEDAL(IV) = SUM2*POP(IV)*DAYS                                    NORMAL
  320 CONTINUE                                                          NORMAL
  321 IF(IAVOID.EQ.2) GO TO 380                                         NORMAL
      FEED = 0.0                                                        NORMAL
      DO 325 IG=1,9                                                     NORMAL
      FEED = FEED + FEEDAL(IG) + CNCAL(IG)                              NORMAL
  325 CONTINUE                                                          NORMAL
      TSTOCK = 0.0                                                      NORMAL
      DO 327 NR=1,NSTOCK                                                NORMAL
      TSTOCK = TSTOCK + FSTOCK(NR) - STKLOS(NR) - CSALES(NR)            NORMAL
  327 CONTINUE                                                          NORMAL
      IF(2.0*FEED.LT.TSTOCK) GO TO 340                                  NORMAL
C-----REDUCING FEED ALLOCATIONS WHEN STOCKS SMALL                       NORMAL
      DO 335 IH=1,9                                                     NORMAL
      ACFEED(IH,1) = ACFEED(IV,1)*0.75                                  NORMAL
      ACFEED(IH,2) = ACFEED(IV,2)*0.75                                  NORMAL
  335 CONTINUE                                                          NORMAL
      GO TO 316                                                         NORMAL
  340 CONTINUE                                                          NORMAL
      IF((YEAR.LE.TSPRNG-DIFF).OR.(YEAR.GT.TFALL+DIFF)) GO TO 380       NORMAL
C-----CHECKING THE FORAGE SUPPLY/DEMAND PICTURE FOR POSSIBLE PROBLEMS   NORMAL
      TGRAZE = 0.0                                                      NORMAL
      DO 355 NX=1,NLANDS                                                NORMAL
      TGRAZE = TGRAZE + STOCKL(NX)*LAND(NX)                             NORMAL
  355 CONTINUE                                                          NORMAL
      RGRAZE = TGRAZE*5.0*DAYS                                          NORMAL
      VGREEN = 0.0                                                      NORMAL
      TGREEN = 0.0                                                      NORMAL
      DO 360 NY=1,NLANDS                                                NORMAL
      TGREEN = TGREEN + GRN(NY)                                         NORMAL
      VGREEN = VGREEN + GRN(NY)*DIGEST(NY)                              NORMAL
  360 CONTINUE                                                          NORMAL
      VGREEN = VGREEN/TGREEN                                            NORMAL
      IF((TGREEN.GE.RGRAZE).AND.(VGREEN.GE.0.40)) GO TO 380             NORMAL
      DO 365 IW=1,9                                                     NORMAL
      DO 364 NV=1,NSTOCK                                                NORMAL
      CNCFRC(IW,NV) = 0.0                                               NORMAL
      RHGFRC(IW,NV) = 0.0                                               NORMAL
      IF(NV.EQ.1) RHGFRC(IW,NV) = 1.0                                   NORMAL
  364 CONTINUE                                                          NORMAL
  365 CONTINUE                                                          NORMAL
      DO 370 IT=1,9                                                     NORMAL
      ACFEED(IT,1) = 0.0                                                NORMAL
      ACFEED(IT,2) = 5.0                                                NORMAL
      IF((IT.EQ.7).OR.(IT.EQ.8)) ACFEED(IT,2) = 2.0                     NORMAL
  370 CONTINUE                                                          NORMAL
      IAVOID = 2                                                        NORMAL
      GO TO 316                                                         NORMAL
  380 CONTINUE                                                          NORMAL
C                                                                       NORMAL
      RETURN                                                            NORMAL
      END                                                               NORMAL
```

GE

```
SUBROUTINE NUTRN        73/73    OPT=1                                    FTN 4.5+410          07/19/76 .17.40.45

      SUBROUTINE NUTRN                                                                          NUTRN      2
C     THIS SUBROUTINE IS THE SHELL WHEREBY THE SUBROUTINES OF M.SCHUETTE                        NUTRN      3
C     ARE CALLED AND MANIPULATED.                                                               NUTRN      4
C                                                                                               NUTRN      5
C     ALAC DETERMINES LACTATION PATTERNS AS A RESULT OF CALVING                                 NUTRN      6
C     COMCYC DETERMINES GROWTH AND REPRODUCTIVE CHANGES FOR COHORT 1                            NUTRN      7
C     GROFEM DETERMINES GROWTH AND REPRODUCTIVE CHANGES FOR COHORTS 2,                          NUTRN      8
C       3, 8, AND 9.                                                                            NUTRN      9
C     GROMAL DETERMINES GROWTH CHANGES FOR COHORTS 4, 5, 6, AND 7.                              NUTRN     10
C                                                                                               NUTRN     11
      COMMON/BLOCK/DETPRT,SELPRT,BEGPRT,PRTCHG,PRTVL1,PRTVL2,DUR,                               NUTRN     12
     1            PLP(9),DR(9),FGRADE(9),TSPRNG,TFALL,WLENGH                                    NUTRN     13
      COMMON/SYSVAR/T,DT,KK(9),KNOWS(9),SUBPOP(9,40),POP(9),ROUT(9),                            NUTRN     14
     1            DELAY(9),DELAYP(9)                                                            NUTRN     15
      COMMON/CNTPOL/PDSTRB(5,9),CNOAL(9),FEEDAL(9),RHGAL(9),CULFRC(10),                         NUTRN     16
     1            TDNR(9),TDNC(9),TDMIF(9),TDMIC(9),AHF(5),MHF(5),                              NUTRN     17
     2            CLDMHR(5),SHAFRC(9,20),CNSFRC(9,20),ACFEED(9,2),                              NUTRN     18
     3            SPLIT,SUPB(3),TBRD(7),TFRAC(10,2),ASFLL(9),ADDRT(9),                          NUTRN     19
     4            C1,C2,C3,C4,C5,C6,C8,C9,C10,C11,TWEAN,TCULL                                   NUTRN     20
      COMMON/HRDVAL/W(9,40),GRADE(9,40),WGTMAX(9),BIN(9,40),FATFAC,                             NUTRN     21
     1            FMATUR(11),DGAIN(9,40),PAWATE(9),TWOLD,TYRLNG                                 NUTRN     22
      COMMON/ENERGY/TONM,YMILK(7),SMM,DIFM,KM,TCVWN,CFE,CFD,ACOMIR(9),                          NUTRN     23
     1            ACOMIC(9),RTDN(9),CTDN(9),WSM,WDIF,KW,WEANWT(2,16),                           NUTRN     24
     2            PDI(13)                                                                       NUTRN     25
      COMMON/REPROD/TBPT(2,16),BEST,GEST,TEST(3,40),BEGCAV,ENDCAV,                              NUTRN     26
     1            INTCAV,DM,TERB,CONDP(5),POPT(11),CPAT(3,40,13),                               NUTRN     27
     2            CTIM(3,40,13),CFC,TNB(3,40),NR(3),IPREG,LAC,                                  NUTRN     28
     3            PCP(13,28),PCP(11),NC(10),ICOUNT(2,16),CSM,CDIF,                              NUTRN     29
     4            KG,GGEST,PHC(2,16,13),HP(2,16,13),PT(2,16,13),ML,                             NUTRN     30
     5            MAXHF(2),HFOUT,AFEST(3,40),WFEST(3,40),FEST(2,16),                            NUTRN     31
     6            COWNEW(2,16),KCNT(2),SCNEW(2),OLDCP(3,13),MOMX                                NUTRN     32
      COMMON/PRICES/APRICE(9),BPRICE(9),CPRICE(20)                                              NUTRN     33
      COMMON/SAVER4/D,BFRAC(3,30),BF(3),PPOP(3)                                                 NUTRN     34
      COMMON/SAVER1/GROWTH(5,2,10),ACTED(5,20),XCPROD(20),XCQUAL(20),                           NUTRN     35
     1            ITEM,NCROPS,IPRINT,ENGLSH,DAYS,NITER,PRTIME,PRTVL,                            NUTRN      1
     2            ISTART,IFLAG,LABELF(20),DJFEED(10),COFTON(9),                                 NUTRN      2
     3            CLIMIT(20),FSPROH,PADJST                                                      NUTRN      3
      EQUIVALENCE(GROWTH(1,1,1),PPW(1,1))                                                       NUTRN      4
      DIMENSION PPW(3,20)                                                                       NUTRN      5
      IT = INT(T+0.0001)                                                                        NUTRN      6
      DAYS = 365.0*DT                                                                           NUTRN     36
      YEAR = T - IT                                                                             NUTRN     37
      DIFF = DT/2.                                                                              NUTRN     38
C                                                                                               NUTRN     39
C-----DETERMINING THE PROPER LAC FLAG DENOTING HERD LACTATION STATUS                            NUTRN     40
C     KEY....LAC = 0, NO HEIFERS OR COWS ARE LACTATING                                          NUTRN     41
C                = 1, BOTH HEIFERS AND COWS ARE LACTATING                                       NUTRN     42
C                = 2, ONLY COWS ARE LACTATING                                                   NUTRN     43
C                = 3, ONLY HEIFERS ARE PREGNANT                                                 NUTRN     44
C                                                                                               NUTRN     45
      LAC = 0                                                                                   NUTRN     46
      IF((YEAR.LT.BEGCAV).OR.(YEAR.GT.TWEAN))GO TO 10                                           NUTRN     47
      DO 3 L=1,INTCAV                                                                           NUTRN     48
      IF(BFRAC(1,L).LE.0.0) GO TO 3                                                             NUTRN     49
      LAC = 2                                                                                   NUTRN     50
    3 CONTINUE                                                                                  NUTRN     51
      DO 7 L=1,INTCAV                                                                           NUTRN     52
      IF((BFRAC(2,L).LE.0.0).AND.(BFRAC(3,L).LE.0.0)) GO TO 7                                   NUTRN     53
      IF(LAC.EQ.2) LAC = 1                                                                      NUTRN     54
      IF(LAC.EQ.0) LAC = 3                                                                      NUTRN     55
    7 CONTINUE                                                                                  NUTRN     56
   10 CONTINUE                                                                                  NUTRN     57
C                                                                                               NUTRN     58
C-----DETERMINING THE PROPER IPREG FLAG DENOTING HERD STATUS                                    NUTRN     59
C     KEY....IPREG = 0, NO HEIFERS OR COWS ARE PREGNANT                                         NUTRN     60
C                  = 1, ONLY HEIFERS ARE PREGNANT                                               NUTRN     61
C                  = 2, ONLY COWS ARE PREGNANT                                                  NUTRN     62
C                  = 3, BOTH HEIFERS AND COWS ARE PREGNANT                                      NUTRN     63
C                                                                                               NUTRN     64
      TB = AMIN1(TBRD(1),TBRD(2))                                                               NUTRN     65
      ENDC = TBRD(1) + DURB(1)                                                                  NUTRN     66
      ENDH = TBRD(2) + DURB(2)                                                                  NUTRN     67
      ENDMAX = AMAX1(ENDC,ENDH)                                                                 NUTRN     68
C                                                                                               NUTRN     69
      IF((YEAR.LT.BEGCAV).AND.(YEAR.GT.ENDMAX)) GO TO 50                                        NUTRN     70
      IF((DURB(1).LE.0.0).AND.(DURB(2).LE.0.0)) GO TO 40                                        NUTRN     71
```

```
      IF(YEAR.GE.ENDCAV) GO TO 31
C
C     COMPUTING IPREG WHEN T IS LESS THAN ENDCAV
C
      IF(TB.GE.ENDCAV) GO TO 50
      IF(YEAR.LT.TB) GO TO 50
      IF(TB.GE.TBRD(1)) GO TO 20
      IF(YEAR.GE.TBRD(1)) GO TO 12
      IF(IPREG.EQ.0) GO TO 42
      IF(IPREG.EQ.2) GO TO 46
      GO TO 50
   12 IF(IPREG.EQ.1) GO TO 46
      GO TO 50
   20 IF(TB.GE.TBRD(2)) GO TO 24
      IF(YEAR.GE.TBRD(2)) GO TO 23
      IF(IPREG.EQ.0) GO TO 44
      IF(IPREG.EQ.1) GO TO 46
      GO TO 50
   23 IF(IPREG.EQ.2) GO TO 46
      GO TO 50
   24 IF((DURB(1).GT.0.0).AND.(DURB(2).LE.0.0)) GO TO 27
      IF(IPREG.EQ.0) GO TO 42
      IF(IPREG.EQ.2) GO TO 46
      GO TO 50
   27 IF((DURB(1).EQ.0.0).AND.(DURB(2).GT.0.0)) GO TO 31
      IF(IPREG.EQ.0) GO TO 44
      IF(IPREG.EQ.1) GO TO 46
      GO TO 50
C
C     COMPUTING IPREG WHEN T GREATER THAN OR EQUAL TO ENDCAV
C
   31 IF((TBRD(1).LT.ENDCAV).AND.(TBRD(2).LT.ENDCAV)) GO TO 50
      IF(YEAR.LT.TB) GO TO 41
      IF(TB.GE.TBRD(1)) GO TO 35
      IF(YEAR.GE.TBRD(1)) GO TO 34
   33 IF(IPREG.NE.1) GO TO 42
      GO TO 50
   34 IF(IPREG.NE.3) GO TO 46
      GO TO 50
   35 IF(TB.GE.TBRD(2)) GO TO 38
      IF(YEAR.GE.TBRD(2)) GO TO 34
   37 IF(IPREG.NE.2) GO TO 44
      GO TO 50
   38 IF((DURB(1).LE.0.0).AND.(DURB(2) .GT.0.0)) GO TO 33
      IF((DURB(1).GT.0.0).AND.(DURB(2).LE.0.0)) GO TO 37
      GO TO 50
C
C     ASSIGNING IPREG VALUES ON THE BASIS OF TIMINGS
C
   40 IF(IPREG.EQ.0) GO TO 50
      IF((IPREG.GT.0).AND.(YEAR.GE.ENDCAV)) GO TO 41
      GO TO 50
   41 IPREG = 0
      GO TO 50
   42 IPREG = 1
      GO TO 50
   44 IPREG = 2
      GO TO 50
   46 IPREG = 3
   50 CONTINUE
C
C-----RESETTING BREEDING VARIABLES TO ZERO AT THE END OF CALVING IF NO
C-----BREEDING IS TO BE PERFORMED THIS YEAR
C
      IF((YEAR.LE.ENDCAV).OR.(YEAR.GT.ENDCAV+DT)) GO TO 53
      DO 52 IXR=1,3
      DO 52 JXR=1,13
      OLDCP(IXR,JXR) = 0.0
   52 CONTINUE
   53 CONTINUE
      IF((TBRD(1).GT.0.0).AND.(TBRD(2).GT.0.0)) GO TO 100
      IF((YEAR.LE.ENDCAV-DIFF).OR.(YEAR.GT.ENDCAV+DIFF)) GO TO 100
      KCW = KK(1)
      DO 60 KWK=1,KCW
      TEST(1,KWK) = PCP(KWK) = WF(KWK) = 0.0
      INB(1,KWK) = 1
      DO 55 KVC=1,13
```

```
SUBROUTINE NUTRN      73/73   OPT=1                                   FTN 4.5+410        07/19/76 .17.40.45

      CPAT(1,KWK,KVC) = 0.0                                                              NUTRN      150
      IF(KVC.EQ.2) GO TO 55                                                              NUTRN      151
      CTIM(1,KWK,KVC) = 0.0                                                              NUTRN      152
   55 CONTINUE                                                                           NUTRN      153
   60 CONTINUE                                                                           NUTRN      154
      POP(KCW+1) = 0.0                                                                   NUTRN      155
      DO 90 IHF=2,3                                                                      NUTRN      156
      KHF = KK(IHF)                                                                      NUTRN      157
      DO 70 JH=1,KHF                                                                     NUTRN      158
      TEST(IHF,JH) = 0.0                                                                 NUTRN      159
      IND(IHF,JH) = 1                                                                    NUTRN      160
      DO 65 KCP=1,13                                                                     NUTRN      161
      CPAT(IHF,JH,KCP) = 0.0                                                             NUTRN      162
      CTIM(IHF,JH,KCP) = 0.0                                                             NUTRN      163
   65 CONTINUE                                                                           NUTRN      164
   70 CONTINUE                                                                           NUTRN      165
      IF(POP(IHF).LE.0.0) GO TO 77                                                       NUTRN      166
      DO 75 KFT=1,16                                                                     NUTRN      167
      CTIM(IHF,KFT,2) = FEST(IHF-1,KFT)                                                  NUTRN      168
   75 CONTINUE                                                                           NUTRN      169
   77 CONTINUE                                                                           NUTRN      170
      DO 85 LPT=1,16                                                                     NUTRN      171
      DO 80 KKT=1,13                                                                     NUTRN      172
      HP(IHF-1,LPT,KKT) = PT(IHF-1,LPT,KKT) = 0.0                                        NUTRN      173
   80 CONTINUE                                                                           NUTRN      174
   85 CONTINUE                                                                           NUTRN      175
   90 CONTINUE                                                                           NUTRN      176
C                                                                                        NUTRN      177
C-----SETTING UP CONTROLS OVER HEIFERS PREGNANT                                          NUTRN      178
C                                                                                        NUTRN      179
  100 IF(LAC.EQ.0) GO TO 115                                                             NUTRN      180
      ML = INT((ENDCAV-BEGCAV)/DM + 1.5)                                                 NUTRN      181
      TEBC = YEAR - BEGCAV                                                               NUTRN      182
      MET = INT((TEBC/DM) + 1.5)                                                         NUTRN      183
      IF(MET - ML.GT.0.0) GO TO 110                                                      NUTRN      184
      MOMX = MET                                                                         NUTRN      185
      GO TO 115                                                                          NUTRN      186
  110 MOMX = ML                                                                          NUTRN      187
  115 CONTINUE                                                                           NUTRN      188
      CSM = BEGCAV + IT                                                                  NUTRN      189
      CDIF = DM                                                                          NUTRN      190
      KC = ML - 1                                                                        NUTRN      191
      NR(1) = 1                                                                          NUTRN      192
      DO 125 IFY=2,3                                                                     NUTRN      193
      JFYUP = KK(IFY)                                                                    NUTRN      194
      DO 120 JFY=1,JFYUP                                                                 NUTRN      195
      IF(SUBPOP(IFY,JFY).LE.0.0) GO TO 120                                               NUTRN      196
      MXP = JFY + INT(GEST/DT + 0.5)                                                     NUTRN      197
      IF(MXP.GT.JFYUP) MXP = JFY - 1                                                     NUTRN      198
      NR(IFY) = MXP                                                                      NUTRN      199
      GO TO 125                                                                          NUTRN      200
  120 CONTINUE                                                                           NUTRN      201
  125 CONTINUE                                                                           NUTRN      202
C                                                                                        NUTRN      203
C-----SAVING OLD PREGNANCY RATES IN THE EVENT THAT BREEDING BEGINS                       NUTRN      204
C-----BEFORE CALVING HAS FINISHED                                                        NUTRN      205
C                                                                                        NUTRN      206
      IF((YEAR.LE.BEGCAV-DIFF).OR.(YEAR.GT.BEGCAV+DIFF)) GO TO 140                       NUTRN      207
      DO 135 ILA=1,3                                                                     NUTRN      208
      IF(ILA.GT.1) GO TO 130                                                             NUTRN      209
      DO 127 JLA=1,11                                                                    NUTRN      210
      OLDCP(ILA,JLA) = POP(JLA)                                                          NUTRN      211
  127 CONTINUE                                                                           NUTRN      212
      GO TO 135                                                                          NUTRN      213
  130 JLBUP = MAXHF(ILA - 1)                                                             NUTRN      214
      DO 132 JLB=1,JLBUP                                                                 NUTRN      215
      KLB = ICOUNT(ILA-1,JLB)                                                            NUTRN      216
      OLDCP(ILA,JLB) = HP(ILA-1,JLB,KLB)                                                 NUTRN      217
  132 CONTINUE                                                                           NUTRN      218
  135 CONTINUE                                                                           NUTRN      219
C                                                                                        NUTRM        7
C-----DETERMING THE AVERAGE POST-PARTUM WEIGHT OF FEMALES                                NUTRM        8
C                                                                                        NUTRM        9
      GGEST = 0.192                                                                      NUTRM       10
      SW = SP = 0.0                                                                      NUTRM       11
      SIG = 0.80168832                                                                   NUTRM       12
      THETA = 0.23460278                                                                 NUTRM       13
```

GE

```
SUBROUTINE NUTRN      73/73    OPT=1                                  FTN 4.5+410          07/19/76 .17.40.45

                 DO 290 IK=1,3                                                          NUTRM      14
                 KI = KK(IK)                                                            NUTRM      15
                 DO 270 JK=1,20                                                         NUTRM      16
                 PPW(IK,JK) = 0.0                                                       NUTRM      17
             270 CONTINUE                                                               NUTRM      18
                 IF(IK.GT.1) GO TO 280                                                  NUTRM      19
           C                                                                            NUTRM      20
           C     WEIGHTS FOR THE MATURE COWS                                            NUTRM      21
           C                                                                            NUTRM      22
                 AGEIN = DELAY(2) + DELAY(8)                                            NUTRM      23
                 TIM = DELAY(IK)/FLOAT(KI)                                              NUTRM      24
                 DO 277 JZ=1,KI                                                         NUTRM      25
                 TAU = TIM*FLOAT(JZ) + AGEIN - 2.0                                      NUTRM      26
                 IF(SUBPOP(IK,JZ).LE.0.0) GO TO 277                                     NUTRM      27
                 WMIN = WGTMAX(1)*(1.0 - 0.477*EXP(-0.0879*TAU))                        NUTRM      28
                 IF(IPREG.LT.2) GO TO 273                                               NUTRM      29
                 PPW(IK,JZ) = (W(IK,JZ) - (OLDCP(IK,JZ)*GEST*GGEST*365.0))/WMIN         NUTRM      30
                 GO TO 277                                                              NUTRM      31
             273 PPW(IK,JZ) = W(IK,JZ)/WMIN                                             NUTRM      32
             277 CONTINUE                                                               NUTRM      33
                 GO TO 290                                                              NUTRM      34
           C                                                                            NUTRM      35
           C     WEIGHTS FOR REPLACEMENT AND BRED HEIFERS                               NUTRM      36
           C                                                                            NUTRM      37
             280 IQA = 0                                                                NUTRM      38
                 JKL = 1                                                                NUTRM      39
                 DO 288 LK=1,KI                                                         NUTRM      40
                 IF(SUBPOP(IK,LK) .LE. 0.0) GO TO 288                                   NUTRM      41
                 AGE = AGEIN - FLOAT(KI - LK)*DT                                        NUTRM      42
                 IF(AGE.GT.1.0) GO TO 281                                               NUTRM      43
                 WMIN = THETA*WGTMAX(1)*EXP(SIG*AGE)                                    NUTRM      44
                 GO TO 282                                                              NUTRM      45
             281 WMIN = WGTMAX(1)*(1.0 - 0.477*EXP(-0.0879*(AGE - 1.0)))                NUTRM      46
             282 IF(LK.GE.NR(IK)) GO TO 283                                             NUTRM      47
                 IQA = IQA + 1                                                          NUTRM      48
                 PPW(IK,IQA) = W(IK,LK)/WMIN                                            NUTRM      49
                 GO TO 288                                                              NUTRM      50
             283 SP = SP + SUBPOP(IK,LK)                                                NUTRM      51
                 IF((IPREG.EQ.1).OR.(IPREG.EQ.3)) GO TO 284                             NUTRM      52
                 SW = SW + (W(IK,LK)*SUBPOP(IK,LK))/WMIN                                NUTRM      53
                 GO TO 288                                                              NUTRM      54
             284 SO = (W(IK,LK)-(OLDCP(IK,JKL)*GEST*GGEST*365.0))                       NUTRM      55
                 SW = SW + (SO)*SUBPOP(IK,LK))/WMIN                                     NUTRM      56
                 JKL = JKL + 1                                                          NUTRM      57
             288 CONTINUE                                                               NUTRM      58
             290 CONTINUE                                                               NUTRM      59
                 IF(SP.EQ.0.0) GO TO 300                                                NUTRM      60
                 PPW(1,1) =(PPW(1,1)*SUBPOP(1,1) + SW)/(SUBPOP(1,1) + SP)               NUTRM      61
             300 CONTINUE                                                               NUTRM      62
           C                                                                            NUTRN     220
           C-----CALLING THE GROWTH AND COW  REPRODUCTION SUBROUTINES                   NUTRN     221
           C                                                                            NUTRN     222
                 CALL ALAC                                                              NUTRN     223
             140 CONTINUE                                                               NUTRN     224
                 CALL COWCYC                                                            NUTRN     225
                 CALL GEOFEM                                                            NUTRN     226
                 CALL GROMAL                                                            NUTRN     227
           C                                                                            NUTRN     228
           C-----SETTING UP CALVING INTERVAL END POINTS AFTER REBREEDING COMPLETED      NUTRN     229
           C                                                                            NUTRN     230
                 IF((YEAR.LE.ENDMAX-DIFF).OR.(YEAR.GT.ENDMAX+DIFF)) GO TO 170           NUTRN     231
                 TYPLNG = BEGCAV + 1.0 + IT                                             NUTRN     232
                 TLOW = TBRD(1) + GEST + IT                                             NUTRN     233
                 THIGH = TLOW + DUR3(1)                                                 NUTRN     234
                 DO 165 I=1,3                                                           NUTRN     235
                 JUP = KK(I)                                                            NUTRN     236
                 DO 160 J=1,JUP                                                         NUTRN     237
                 KUP = INB(I,J)                                                         NUTRN     238
                 IF(KUP.EQ.0) GO TO 160                                                 NUTRN     239
                 DO 155 K=1,KUP                                                         NUTRN     240
                 IF(CTIM(I,J,K).LT.TLOW) TLOW = CTIM(I,J,K)                             NUTRN     241
                 IF(CTIM(I,J,K).GT.THIGH) THIGH = CTIM(I,J,K)                           NUTRN     242
             155 CONTINUE                                                               NUTRN     243
             160 CONTINUE                                                               NUTRN     244
             165 CONTINUE                                                               NUTRN     245
                 BEGCAV = TLOW - DIFF - INT(TLOW)                                       NUTRN     246
                 ENDCAV = THIGH + DIFF - INT(THIGH)                                     NUTRN     247
```

```
SUBROUTINE NUTRN      73/73   OPT=1                          FTN 4.5+410        07/19/76 .17.40.45

                170 CONTINUE                                                      NUTRN      248
310           C                                                                   NUTRN      249
                    PRINT200,LAC,IPREG                                            NUTRN      250
                200 FORMAT(5X,*TEMPORARY NUTRN PRINTING, LAC,IPREG...*,2I4)       NUTRN      251
                    RETURN                                                        NUTRN      252
                    END                                                           NUTRN      253
```

```
      SUBROUTINE PRCOST                                                 PRCOST      2
C                                                                       PRCOST      3
C     VERSION AS OF 11/19/75                                            PRCOST      4
C     THIS SUBROUTINE COMPUTES PRODUCTION AND ANIMAL PURCHASE COSTS     PRCOST      5
C     FOR THE ANIMAL AND CROP SECTORS.                                  PRCOST      6
C                                                                       PRCOST      7
C-----THE FOLLOWING VARIABLES ARE USED                                  PRCOST      8
C                                                                       PRCOST      9
C        ACOST(I) = COST OF GROUP I EXPENSES THIS TIME PERIOD           PRCOST     10
C        ADDRT(M) = ANNUAL RATE OF ADDITIONS TO COHORT M                PRCOST     11
C        APRICE(J) = PRICE PER KG OF ANIMALS MEETING GRADE J STANDARDS  PRCOST     12
C        BPRICE(J) = PRICE PER UNIT QUANTITY OF RESORC(J)               PRCOST     13
C        CCOST(I) = COST OF GROUP I EXPENSES FOR CROPS THIS TIME PERIOD PRCOST     14
C        CPRICE(J) = PRICE OF CROP J IN $ PER KG                        PRCOST     15
C        CROP(N,1) = PRODUCTION OF CROP N IN THIS TIME PERIOD(KG)       PRCOST     16
C        DEFLAT = PRICE DEFLATOR REPRESENTING RATIO OF CROP PRODUCTION  PRCOST     17
C                 COSTS TO THE CURRENT MARKET PRICE                     PRCOST     18
C        OVHEAD = ANNUAL OVERHEAD COSTS OF THIS ENTERPRISE              PRCOST     19
C        PGRADE(M) = GRADE OF ANIMALS PURCHASED FOR COHORT M            PRCOST     20
C        RESORC(K) = AMOUNT OF RESOURCE K USED THIS TIME PERIOD         PRCOST     21
C        STKFED(L) = AMOUNT OF STOCK L FED TO ANIMALS THIS PERIOD       PRCOST     22
C        STKPUR(L) = AMOUNT OF STOCK L PURCHASED THIS TIME PERIOD       PRCOST     23
C        UNIT = A SCALING FACTOR FOR PARAMETERS ON A PER MONTH BASIS    PRCOST     24
C                                                                       PRCOST     25
C-----END OF VARIABLE LIST                                              PRCOST     26
C                                                                       PRCOST     27
      COMMON/BLOCK/DETPRT,SELPRT,BEGPRT,PRTCHG,PRTVL1,PRTVL2,DUR,       PRCOST     28
     1            PLR(9),OR(9),PGRADE(9),TSFRNG,TFALL,WLENGM            PRCOST     29
      COMMON/SYSVAR/T,DT,KK(9),KNOWS(9),SUBPOP(9,40),POP(9),ROUT(9),    PRCOST     30
     1              DELAY(9),DELAYP(9)                                  PRCOST     31
      COMMON/MONEY/ASALES(10),CSALES(20),AREV(10),CREV(20),CASH(25),    PRCOST     32
     1             TAGRP(15),TANP(15),TAXES(15),TAGRPD(15),TANPD(15),   PRCOST     33
     2             TAXESD(15),NACOST,NCCOST,CAPTL(5),TACASH(15),        PRCOST     34
     3             LVALUE,LIFE,ANREV(15),AREVD(15),ANCOST(15),          PRCOST     35
     4             ACOST(21),ACOSTD(15),CCOST(21),TACSHD(15),           PRCOST     36
     5             ASOLD(10),CSOLD(20),SALES,DEBTJ                      PRCOST     37
      COMMON/CNTROL/POSTNB(5,9),CNCAL(9),FEECAL(9),RHGAL(9),CULFRC(10), PRCOST     38
     1              TDNR(9),TDNC(9),TDMIR(9),TDMIC(9),AHS(5),MHR(5),    PRCOST     39
     2              OLDMHR(5),RHGFRC(9,20),CNCFRC(9,20),ACFEED(9,2),    PRCOST     40
     3              SPLIT,DURB(3),TBRD(3),TFRAC(10,2),ASFLL(9),ADDRT(9), PRCOST     41
     4              C1,C2,C3,C4,C5,C6,C8,C9,C10,C11,TMEAN,TCULL         PRCOST     42
      COMMON/MATERL/RESORC(10),NRSCRC,OVHEAD,DEFLAT,SPJRED,SPVACC,      PRCOST     43
     1              HRCALV,HRFED1,HRFED2,HRBRED,HRVACC,HRMEAN,HRCULL,   PRCOST     44
     2              HRDAST,HRSEED,HRFERT,HRHARV,HREQIP,HRFCAP,HRMAIN,   PRCOST     45
     3              SPUTL1,SPUTL2,SPUTL3,SPUTL4,SPUTL5,SPSEED,SPFERT,   PRCOST     46
     4              SPREP1,SPREP2,SPREP3,HLEASE                         PRCOST     47
      COMMON/EARTH/DIGEST(5),GRN(5),LAND(5),NLANDS,SNZERO,SMZERO,       PRCOST     48
     1             STOCKL(5),ACPROD(5)                                  PRCOST     49
      COMMON/FIELD/NSTOCK,FSTOCK(20),STKFED(20),STKPUR(20),PRQUAL(20),  PRCOST     50
     1             SPOIL(20),STKLOS(20),FQUAL(20),FRCLOS(20),CPURCH(20), PRCOST     51
     2             CROP(20,2),CROPG(20),CFEED(20,2),CROPQL(20,2)        PRCOST     52
      COMMON/PRICES/APRICE(9),BPRICE(9),CPRICE(20)                      PRCOST     53
      COMMON/HROVAL/W(9,40),GRADE(9,40),WGTMAX(9),RIN(9,40),FATFAC,     PRCOST     54
     1              FMATUR(10),DGAIN(9,40),PAWATE(9),TWOLD,TYRLNG       PRCOST     55
      COMMON/REPROD/TBRTH(2,16),DEST,GEST,TEST(3,40),BEGCAV,ENDCAV,     PRCOST     56
     1              INTCAV,DM,TEBC,CONCP(5),POPT(11),CPAT(3,40,13),     PRCOST     57
     2              CTIM(3,40,13),CFC,INB(3,40),NR(3),IPREG,LAC,        PRCOST     58
     3              PCD(10,14),PCP(11),WF(11),ICCUNT(2,16),CSM,CDIF,    PRCOST     59
     4              KC,GGEST,PHC(2,16,13),HP(2,16,13),PT(2,16,13),ML,   PRCOST     60
     5              MAXHF(2),HFOUT,AFEST(3,40),WFEST(3,40),FEST(2,16),  PRCOST     61
     6              CONNEW(2,16),KCNT(2),SCNEW(2),OLDCP(3,13),MOMX      PRCOST     62
      REAL MHR,LAND                                                     PRCOST     63
      INTEGER PGRADE                                                    PRCOST     64
      DATA AGEVAC/0.50/                                                 PRCOST     65
      NCROPS = NSTOCK                                                   PRCOST     66
      YEAR = T - INT(T + 0.001)                                         PRCOST     67
      DIFF = DT/2.                                                      PRCOST     68
      UNIT = DT/.083333333                                              PRCOST     69
      DAYS = 365.0*DT                                                   PRCOST     70
C                                                                       PRCOST     71
C     OTHER PRODUCTION RESOURCES USED THIS TIME INTERVAL                PRCOST     72
C                                                                       PRCOST     73
C     ---   CALVING COSTS IF ANY   ---                                 PRCOST     74
      IF((SUBPOP(7,1).EQ.0.0).AND.(SUBPOP(8,1).EQ.0.0)) GO TO 55        PRCOST     75
      CALVES = SUBPOP(7,1) + SUBPOP(8,1)                                PRCOST     76
      RESORC(1) = RESORC(1) + CALVES*HRCALV                             PRCOST     77
   55 CONTINUE                                                          PRCOST     78
C     ---   BREEDING COSTS IF ANY   ---                                PRCOST     79
      EVENTS = 0.0                                                      PRCOST     80
      DO 65 INO=1,3                                                     PRCOST     81
      IF((YEAR.LE.TBRD(INO)-DIFF).OR.(YEAR.GT.TBRD(INO)+DURB(INO)+DIFF)) PRCOST     82
```

```
                                                                    GO TO 65 PRCOST      83
    1
      SPRD = DT/DURB(INO)                                                    PRCOST      84
      JNPUP = KK(INO)                                                        PRCOST      85
      DO 60 JNP=1,JNPUP                                                      PRCOST      86
      EVENTS = EVENTS + INB(INO,JNP)*SUBPOP(INO,JNP)*SPRD                    PRCOST      87
   60 CONTINUE                                                               PRCOST      88
   65 CONTINUE                                                               PRCOST      89
      RESORC(1) = RESORC(1) + EVENTS*HRBRED                                  PRCOST      90
      RESORC(7) = RESORC(7) + EVENTS*SPBRED                                  PRCOST      91
C     ---    CASTRATION AND VACCINATION COSTS IF ANY    ---                  PRCOST      92
      IF(ABS(YEAR - AGEVAC).GT.DT/2.) GO TO 66                               PRCOST      93
      RESORC(1) = RESORC(1) + POP(7)*(1. - PC2)*HRCAST                       PRCOST      94
      RESORC(1) = RESORC(1) + (POP(7) + POP(8))*HRVACC                       PRCOST      95
      RESORC(4) = RESORC(4) + (POP(7) + POP(8))*SPVACC                       PRCOST      96
   66 CONTINUE                                                               PRCOST      97
C     ---    FEEDING COSTS DETERMINED FROM THE ALLOCATION DIVERSITY    ---  PRCOST      98
      REMOVL = 0.0                                                           PRCOST      99
      DO 69 NXA=1,NSTOCK                                                     PRCOST     100
      REMOVL = REMOVL + STKFED(NXA)*HRFED1                                   PRCOST     101
   69 CONTINUE                                                               PRCOST     102
      SPREAD = 0.0                                                           PRCOST     103
      DO 72 IXA=1,9                                                          PRCOST     104
      IF(POP(IXA).EQ.0.0) GO TO 72                                           PRCOST     105
      SPREAD = SPREAD + HRFED2*(CNCAL(IXA) +FEEDAL(IXA))/POP(IXA)            PRCOST     106
   72 CONTINUE                                                               PRCOST     107
      RESORC(1) = RESORC(1) + REMOVL + SPREAD                                PRCOST     108
      TLAND = 0.0                                                            PRCOST     109
      DO 2 L4=1,NLANDS                                                       PRCOST     110
      TLAND = TLAND + LAND(L4)                                               PRCOST     111
    2 CONTINUE                                                               PRCOST     112
      SUMSTK = 0.0                                                           PRCOST     113
      DO 3 NF=1,NSTOCK                                                       PRCOST     114
      SUMSTK = SUMSTK + FSTOCK(NF)                                           PRCOST     115
    3 CONTINUE                                                               PRCOST     116
      TPOP = 0.0                                                             PRCOST     117
      DO 4 IXB=1,9                                                           PRCOST     118
      TPOP = TPOP + POP(IXB)                                                 PRCOST     119
    4 CONTINUE                                                               PRCOST     120
C     ---    UTILITY REQUIREMENTS FOR THE FEEDS AND THE HERD    ---         PRCOST     121
      IF((YEAR.GE.TSPRNG).AND.(YEAR.LE.TFALL)) GO TO 5                       PRCOST     122
      RESORC(3) = RESORC(3) + SPUTL1*UNIT*TPOP                               PRCOST     123
      RESORC(3) = RESORC(3) + SPUTL2*UNIT*SUMSTK                             PRCOST     124
      GO TO 6                                                                PRCOST     125
    5 RESORC(3) = RESORC(3) + SPUTL3*UNIT*TPOP                               PRCOST     126
      RESORC(3) = RESORC(3) + SPUTL4*UNIT*SUMSTK                             PRCOST     127
    6 CONTINUE                                                               PRCOST     128
C     ---    RESOURCES USED IN RESEEDING AND FERTILIZING PASTURE    ---    PRCOST     129
      IF(ABS(YEAR - TSPRNG).GT.DT/2.) GO TO 9                                PRCOST     130
      RESORC(5) = RESORC(5) + SPSEED*TLAND                                   PRCOST     131
      RESORC(1) = RESORC(1) + (HRSEED + HRFERT)*TLAND                        PRCOST     132
      RESORC(4) = RESORC(4) + SPFERT*TLAND                                   PRCOST     133
    9 CONTINUE                                                               PRCOST     134
C     ---    RESOURCE USE FROM MECHANICALLY HARVESTING CROPS    ---         PRCOST     135
      DO 10 LB=1,NLANDS                                                      PRCOST     136
      RESORC(1) = RESORC(1) + HRHARV*OLDMHR(LB)*DAYS                         PRCOST     137
      RESORC(3) = RESORC(3) + SPUTL5*OLDMHR(LB)*DAYS                         PRCOST     138
   10 CONTINUE                                                               PRCOST     139
C     ---    QUANTITY OF LEASED LAND USED THIS TIME INCREMENT    ---        PRCOST     140
      RESORC(6) = RESORC(6) + HLEASE                                         PRCOST     141
C     ---    RESOURCES USED IN REPAIR TO EQUIPMENT AND BUILDINGS    ---    PRCOST     142
      Q = HREQIP*TPOP + HRFCAP*SUMSTK + HRMAIN*TLAND                         PRCOST     143
      RESORC(1) = RESORC(1) + UNIT*Q                                         PRCOST     144
      R = SPREP1*TPOP + SPREP2*SUMSTK + SPREP3*TLAND                         PRCOST     145
      RESORC(8) = RESORC(8) + UNIT*R                                         PRCOST     146
C                                                                            PRCOST     147
C***  CROP PRODUCTION COSTS THIS TIME INTERVAL                               PRCOST     148
C                                                                            PRCOST     149
      DO 15 NZ=1,NCCOST                                                      PRCOST     150
      CCOST(NZ) = 0.0                                                        PRCOST     151
   15 CONTINUE                                                               PRCOST     152
      DO 20 NA=2,NCROPS                                                      PRCOST     153
      CCOST(1) = CCOST(1) + CROP(NA,1)*CPRICE(NA)*DEFLAT                     PRCOST     154
   20 CONTINUE                                                               PRCOST     155
      CCOST(2) = 0.0                                                         PRCOST     156
      HTEMP = HRHARV*SPRICE(1)                                               PRCOST     157
      STEMP = SPUTL5*SPRICE(3)                                               PRCOST     158
      DO 22 NX=1,NLANDS                                                      PRCOST     159
      CCOST(2) = CCOST(2) + (HTEMP + STEMP)*OLDMHR(NX)*DAYS                  PRCOST     160
   22 CONTINUE                                                               PRCOST     161
      DO 25 NB=1,NSTOCK                                                      PRCOST     162
      CCOST(3) = CCOST(3) + STKPUR(NB)*CPRICE(NB)                            PRCOST     163
```

```
   25 CONTINUE
C
C***  ANIMAL PRODUCTION COSTS THIS TIME INTERVAL
C
      IAUP = NACOST + 1
      DO 30 IA=1,IAUP
      ACOST(IA) = 0.0
   30 CONTINUE
      ACOST(1)  = RESORC(1)*BPRICE(1)
      ACOST(2)  = RESORC(8)*BPRICE(8)
      ACOST(3)  = RESORC(3)*BPRICE(3)
      ACOST(4)  = RESORC(2)*BPRICE(2)  + RESORC(7)*BPRICE(7)
      ACOST(5)  = RESORC(4)*BPRICE(4)  + RESORC(5)*BPRICE(5)
      ACOST(6)  = RESORC(6)*BPRICE(6)*DT
      DO 35 IB=1,NSTOCK
      ACOST(7)  = ACOST(7) + STKFED(IB)*CPRICE(IB)
   35 CONTINUE
      DO 40 IC=1,9
      IF(ADDRT(IC).LE.0.0) GO TO 40
      LP = PGRADE(IC)
      ACOST(8)= ACOST(8) + ADDRT(IC)*DT*APRICE(LP)*PAWATE(IC)
   40 CONTINUE
      ACOST(9) = OVHEAD*DT
      ACOST(NACOST + 1)  = 0.0
      DO 45 NC=1,NACOST
      IF(NC.EQ.7) GO TO 45
      ACOST(NACOST + 1)  = ACOST(NACOST+1) + ACOST(NC)
   45 CONTINUE
      CCOST(NCCOST + 1)  = 0.0
      DO 50 ND=1,NCCOST
      IF(ND.EQ.2) GO TO 50
      CCOST(NCCOST + 1)  = CCOST(NCCOST + 1) + CCOST(ND)
   50 CONTINUE
C
C***  INITIALIZING RESOURCE CONSUMED FOR THE NEXT TIME INCREMENT
C
      DO 100 NG=1,NRSORC
      RESORC(NG) = 0.0
  100 CONTINUE
C
      RETURN
      END
```

```
      SUBROUTINE PRINTR(IPRINT)                                         PRINTR      2
C     THIS SUBROUTINE COMPUTES AND PRINTS INFORMATION OF INTEREST AT    PRINTR      3
C     YEAR END AND AT THE TERMINATION OF THE PROJECT WITH T = DUR.      PRINTR      4
C     PHYSICAL PRODUCTION DURING THE YEAR, ACTUAL SALES, CURRENT STOCKS, PRINTR      5
C     ACCOUNTING VARIABLES, CHANGES IN ASSET VALUE, AND DISCOUNTING THE PRINTR      6
C     ANNUAL PROFITS OVER TIME ARE THE MAJOR TASKS PERFORMED.           PRINTR      7
C                                                                       PRINTR      8
C                                                                       PRINTR      9
      COMMON/BLOCK/DETPRT,SE.PRT,BEGPRT,PRTCHG,PRTVL1,PRTVL2,DUR,       PRINTR     10
     1             PLS(9),DR(9),PGRADE(9),TSPRNG,TFALL,HLENGH           PRINTR     11
      COMMON/SYSVAR/T,DT,KK(9),KNOWS(9),SUBPOP(9,40),POP(9),KOUT(9),    PRINTR     12
     1              DELAY(9),DELAYP(9)                                  PRINTR     13
      COMMON/FIELD/NSTOCK,FSTOCK(20),STKFED(20),STKPUR(20),PRQUAL(20),  PRINTR     14
     1             SPOUL(20),STKLOS(20),FQUAL(20),FRCLOS(20),CPURCH(20), PRINTR     15
     2             CROP(20,2),CROPG(20),CFEED(20,2),CROPQL(20,2)        PRINTR     16
      COMMON/MONEY/ASALES(15),CSALES(21),AREV(15),CREV(21),CASH(26),    PRINTR     17
     1             TAGRP(15),TANP(15),TAXES(15),TAGRPD(15),TANPD(15),   PRINTR     18
     2             TAXESD(15),NACOST,NCCOST,CAPTL(5),TACASH(15),        PRINTR     19
     3             LVALUE,LIFE,ANREV(15),AREVD(15),ANCOST(15),          PRINTR     20
     4             ACOST(21),ACOSTD(15),CCOST(21),TACSHD(15),           PRINTR     21
     5             ASOLD(10),CSOLD(20),SALES,DEBTS                      PRINTR     22
      COMMON/ASSETS/CURVAL(10),ASTVAL(9,40),OLDVAL(10),ASTINC(10),      PRINTR     23
     1              VALCRP(20),OLDCRP(20),CRPINC(21)                    PRINTR     24
      COMMON/PRICES/APRICE(9),BPRICE(9),CPRICE(20)                      PRINTR     25
      COMMON/PRINTS/PRV(3,15),NAME(6,2),CONOPT(9,2),DISC(9),CNAME(20,2), PRINTR     26
     1              TANREV,TCRREV,DCOUNT,DASSET                         PRINTR     27
      COMMON/SAVERS/SDEBT,SDEBTR,SREPAY,SLOAN,PROTAX,SDEBTD,PRODUC(9)   PRINTR     28
      DATA NAME(1,1),NAME(1,2)/8HGROSS RE,8HVENUE    /                  PRINTR     29
      DATA NAME(2,1),NAME(2,2)/8HDIRECT C,8HOSTS     /                  PRINTR     30
      DATA NAME(3,1),NAME(3,2)/8HGROSS PR,8HOFITS    /                  PRINTR     31
      DATA NAME(4,1),NAME(4,2)/8HTAXES   ,8H         /                  PRINTR     32
      DATA NAME(5,1),NAME(5,2)/8HNET PROF,8HIT       /                  PRINTR     33
      DATA NAME(6,1),NAME(6,2)/8HCASH FLO,8HW        /                  PRINTR     34
C                                                                       PRINTR     35
      YEAR = T - INT(T+0.01)                                            PRINTR     36
      IF(ABS(YEAR).GT.DT/2.) GO TO 215                                  PRINTR     37
      IF(T.LE.1.0) SALES = 0.0                                          PRINTR     38
      SALES = SALES + ASOLD(10)                                         PRINTR     39
      IF(IPRINT.NE.1) RETURN                                            PRINTR     40
C                                                                       PRINTR     41
C     COMPUTING INCREMENTAL ASSET VALUE AT YEARS END                    PRINTR     42
C                                                                       PRINTR     43
C     ---CATTLE DIFFERENCES---                                          PRINTR     44
      DO 120 IA=1,9                                                     PRINTR     45
      CURVAL(IA) = 0.0                                                  PRINTR     46
      JAUP = KK(IA)                                                     PRINTR     47
      DO 115 JA=1,JAUP                                                  PRINTR     48
      CURVAL(IA) = CURVAL(IA) + SUBPOP(IA,JA)*ASTVAL(IA,JA)             PRINTR     49
  115 CONTINUE                                                          PRINTR     50
  120 CONTINUE                                                          PRINTR     51
      ASTINC(10) = 0.0                                                  PRINTR     52
      DO 125 IB=1,9                                                     PRINTR     53
      ASTINC(IB) = CURVAL(IB) - OLDVAL(IB)                              PRINTR     54
      ASTINC(10) = ASTINC(10) + ASTINC(IB)                              PRINTR     55
      OLDVAL(IB) = CURVAL(IB)                                           PRINTR     56
  125 CONTINUE                                                          PRINTR     57
C     ---FEED STOCK DIFFERENCES---                                      PRINTR     58
      DO 130 NC=1,NSTOCK                                                PRINTR     59
      VALCRP(NC) = FSTOCK(NC)*CPRICE(NC)                                PRINTR     60
  130 CONTINUE                                                          PRINTR     61
      CRPINC(21) = 0.0                                                  PRINTR     62
      DO 135 ND=1,NSTOCK                                                PRINTR     63
      CRPINC(ND) = VALCRP(ND) - OLDCRP(ND)                              PRINTR     64
      CRPINC(21) = CRPINC(21) + CRPINC(ND)                              PRINTR     65
      OLDCRP(ND) = VALCRP(ND)                                           PRINTR     66
  135 CONTINUE                                                          PRINTR     67
C                                                                       PRINTR     68
C***  ANNUAL PRINTING                                                   PRINTR     69
C                                                                       PRINTR     70
      TPOP = 0.0                                                        PRINTR     71
      DO 140 IC=1,9                                                     PRINTR     72
      TPOP = TPOP + POP(IC)                                             PRINTR     73
  140 CONTINUE                                                          PRINTR     74
      PRINT149                                                          PRINTR     75
  149 FORMAT(*1*,4X,20(5H*****)/)                                       PRINTR     76
      MY = INT(T+.5)                                                    PRINTR     77
      PRINT151,T                                                        PRINTR     78
  151 FORMAT(5X,*ANNUAL FINANCIAL ACCOUNTING OF OPERATIONS*//5X,        PRINTR     79
     1 20(5H*****)//15X,                                                PRINTR     80
     2*YEARS AFTER PROJECT INITIATION =*,F5.2//)                        PRINTR     81
      DCNT = DCOUNT*100.                                                PRINTR     82
```

```
      PRINT155,DCNT                                                     PRINTR     83
  155 FORMAT(10X,*CLASSIFICATION*,10X,*ANNUAL TOTAL*,10X,               PRINTR     84
     1*DISCOUNTED TO JAN. 1 AT*F4.1* PER CENT*/)                        PRINTR     85
      PRINT160,NAME(1,1),NAME(1,2),ANREV(MY),AREVD(MY)                  PRINTR     86
      PRINT160,NAME(2,1),NAME(2,2),ANCOST(MY),ACOSTD(MY)                PRINTR     87
      PRINT160,NAME(3,1),NAME(3,2),TAGRP(MY),TAGRPD(MY)                 PRINTR     88
      PRINT160,NAME(4,1),NAME(4,2),TAXES(MY),TAXESD(MY)                 PRINTR     89
      PRINT160,NAME(5,1),NAME(5,2),TANP(MY),TANPD(MY)                   PRINTR     90
      PRINT160,NAME(6,1),NAME(6,2),TACASH(MY),TACSHD(MY)                PRINTR     91
  160 FORMAT(10X,2A8,8X,F10.2,10X,F10.2)                                PRINTR     92
C                                                                       PRINTR     93
      PRINT161                                                          PRINTR     94
  161 FORMAT(//)                                                        PRINTR     95
      MT = INT(1.0/DT + 0.5)                                            PRINTR     96
      PRINT165,DT,(MB,CASH(MB),MB=1,MT)                                 PRINTR     97
  165 FORMAT(10X,*CASH FLOW FOR EACH TIME PERIOD*20X,                   PRINTR     98
     1*NOTE -- THESE PERIODS ARE OF EQUAL LENGTH OVER THE YEAR*//       PRINTR     99
     212X,*PERIOD*,6X,*AMOUNT PER PERIOD*,27X,*THEIR LENGTH IS*,F7.4,   PRINTR    100
     3*  YEARS*//26(10X,I6,9X,F10.2/))                                  PRINTR    101
C                                                                       PRINTR    102
      PRINT170                                                          PRINTR    103
  170 FORMAT(////10X,*PHYSICAL PRODUCTION DURING THE YEAR*//)           PRINTR    104
      PRINT171                                                          PRINTR    105
  171 FORMAT(20X,*ANIMAL COHORT*,10X,*CUR. POPULATION*,10X,*NUMBER SOLD* PRINTR    106
     1,10X,*INCRMT. VALUE*/)                                            PRINTR    107
      DO 177 I=1,9                                                      PRINTR    108
      PRINT173,COHORT(I,1),COHORT(I,2),POP(I),ASOLD(I),ASTINC(I)        PRINTR    109
  173 FORMAT(20X,2A10,6X,F10.0,12X,F10.0,13X,F10.2)                     PRINTR    110
  177 CONTINUE                                                          PRINTR    111
      PRINT178,TPOP,ASOLD(10),ASTINC(10)                                PRINTR    112
  178 FORMAT(20X,*TOTAL*,21X,F10.0,12X,F10.0,13X,F10.2)                 PRINTR    113
      PRINT179                                                          PRINTR    114
  179 FORMAT(//)                                                        PRINTR    115
      PRINT180                                                          PRINTR    116
  180 FORMAT(20X,*FEED STOCK NAME*,5X,*   STOCK  *,5X,*PRODUCTION*,5X,  PRINTR    117
     1*   SALES   *,5X,*PURCHASES*5X* CROPS FED*5X*INCRMT. VALUE*/)      PRINTR    118
      DO 185 JB=1,NSTOCK                                                PRINTR    119
      PRINT182,CNAME(JB,1),CNAME(JB,2),FSTOCK(JB),CROPG(JB),CSOLD(JB),  PRINTR    120
     1CPURCH(JB),CFEED(JB,1),CRPINC(JB)                                 PRINTR    121
  182 FORMAT(20X,2A8,3X,5(F10.0,5X),F10.2)                              PRINTR    122
      CROPG(JB) = 0.0                                                   PRINTR    123
      CSOLD(JB) = 0.0                                                   PRINTR    124
      CPURCH(JB) = 0.0                                                  PRINTR    125
      CFEED(JB,1) = 0.0                                                 PRINTR    126
      CFEED(JB,2) = 0.0                                                 PRINTR    127
  185 CONTINUE                                                          PRINTR    128
      PRINT187,CRPINC(21)                                               PRINTR    129
  187 FORMAT(10X,*TOTAL*,F10.2)                                         PRINTR    130
      PRINT199                                                          PRINTR    131
  199 FORMAT(*1*)                                                       PRINTR    132
      PRINT202                                                          PRINTR    133
  202 FORMAT(/25X,*ANNUAL REPORT*,30X,*PAGE 2*/)                        PRINTR    134
      PRINT206                                                          PRINTR    135
  206 FORMAT(10X,*ANIMAL PRODUCTION EXPENSES*/)                         PRINTR    136
      PRINT210,(PRODUC(NI),NI=1,NACOST)                                 PRINTR    137
  210 FORMAT(15X,*LABOR*11X,F10.2/                                      PRINTR    138
     115X,*REPAIRS*9X,F10.2/                                            PRINTR    139
     215X,*UTILITIES*8X,F10.2/                                          PRINTR    140
     315X,*VET. AND BREED.  *F10.2/                                     PRINTR    141
     415X,*FERT. AND SEED  *,F10.2/                                     PRINTR    142
     515X,*LEASED LAND*5X,F10.2/                                        PRINTR    143
     615X,*FEED*12X,F10.2/                                              PRINTR    144
     715X,*CATTLE PURCHASES*,F10.2/                                     PRINTR    145
     815X,*OTHER*,11X,F10.2//)                                          PRINTR    146
      PRINT199                                                          PRINTR    147
C                                                                       PRINTR    148
C***  PRINTING OUT THE END OF PROJECT FINANCIAL ANALYSIS                PRINTR    149
C                                                                       PRINTR    150
  215 IF(ABS(T-DUR).GT.DT/2.) RETURN                                    PRINTR    151
      TCRREV = 0.0                                                      PRINTR    152
      TANREV = 0.0                                                      PRINTR    153
      DO 217 M=1,MYRUP                                                  PRINTR    154
      TANREV = TANREV + ANREV(M)                                        PRINTR    155
      TCRREV = TCRREV + ANCOST(M)                                       PRINTR    156
  217 CONTINUE                                                          PRINTR    157
C                                                                       PRINTR    158
C     COMPUTING PRESENT DISCOUNTED VALUES USING A VARIETY OF DISCOUNTS  PRINTR    159
C                                                                       PRINTR    160
      DO 219 IA=1,9                                                     PRINTR    161
      PRV(1,IA) = PRV(2,IA) = PRV(3,IA) =                               PRINTR    162
  219 CONTINUE                                                          PRINTR    163
```

```
      DO 250 IB = 1,9
      DFLATR = 1.0 + DISC(IB)
      DO 220 JA=1,MYRUP
      PRV(1,IB) = PRV(1,IB) + TAGRP(JA)/(DFLATR**JA)
  220 CONTINUE
      DO 230 JB=1,MYRUP
      PRV(2,IB) = PRV(2,IB) + TANP(JB)/(DFLATR**JB)
  230 CONTINUE
      DO 240 JC=1,MYRUP
      PRV(3,IB) = PRV(3,IB) + TACASH(JC)/(DFLATR**JC)
  240 CONTINUE
  250 CONTINUE
      IF(IPRINT.NE.1) RETURN
      PRINT300
  300 FORMAT(///5X,20(5H*****)//40X,
     1*FINAL SUMMARY REPORT OF THE PROJECT*//5X,20(5H*****)//)
      PRINT302
  302 FORMAT(15X,*GENERAL PROJECT CHARACTERISTICS*/)
      PRINT305,COR
  305 FORMAT(20X,*PROJECT LIFETIME (YEARS) = *,F4.1/)
      CAPT = CAPTL(6)/1000.
      PRINT310,CAPT
  310 FORMAT(20X,*INITIAL CAPITAL INVESTMENT ($000) =*,F10.2/)
      DEBTAD = DEBTC/1000.
      PRINT311,DEBTAD
  311 FORMAT(20X,*ORIGINAL LONG TERM DEBT ($000) = *,F10.2/)
      CAPTNW = CAPTL(1)/1000.
      PRINT312,CAPTNW
  312 FORMAT(20X,*REMAINING INDEBTEDNESS ($000) =*,F10.2/)
      SOD = SDEBTC/1000.
      PRINT313,SOD
  313 FORMAT(20X,*ORIGINAL SHORT TERM DEBT ($000) = *,F10.0/)
      SCD = SDEBT/1000.
      PRINT314,SCD
  314 FORMAT(20X,*REMAINING SHORT TERM DEBT ($000) = *,F10.2/)
      PRINT315,SALES
  315 FORMAT(20X,*TOTAL CATTLE SOLD (HEAD) =*,F10.0/)
      TAN = TANREV/1000.
      PRINT320,TAN
  320 FORMAT(20X,*TOTAL SALES REVENUE ($000) =*,F10.2/)
      TCP = TCRREV/1000.
      PRINT325,TCP
  325 FORMAT(20X,*TOTAL DIRECT PRODUCTION COSTS ($000) =*,F10.2/)
C
      PRINT330,((NAME(I,J),J=1,2),I=1,6)
  330 FORMAT(////15X,*FINANCIAL STATEMENT OVER THE PROJECTS LIFETIME*
     1//15X,*YEARS*,10X,12A8)
      MYRUP = INT(DUR+0.5)
      DO 340 M=1,MYRUP
      PRINT335,M,ANREV(M),ANCOST(M),TAGRP(M),TAXES(M),TANP(M),TACASH(M)
  335 FORMAT(/15X,I3,12X,F10.2,5(6X,F10.2))
  340 CONTINUE
      PRINT342
  342 FORMAT(*1*/25X,*FINAL REPORT*,30X,*PAGE TWO*)
      PRINT345,NAME(3,1),NAME(3,2),NAME(5,1),NAME(5,2),NAME(6,1),
     1NAME(6,2)
  345 FORMAT(///15X,*ANALYSIS OF TOTAL LIFETIME PROJECT VALUE*//
     115X,*DISCOUNT*,25X,*DISCOUNTED PRESENT VALUE OF*/
     217X,*RATE*,17X,2A8,9X,2A8,9X,2A8//)
      DO 355 I=1,9
      PRINT350,DISC(I),(PRV(J,I),J=1,3)
  350 FORMAT(15X,F5.3,20X,F10.2,12X,F10.2,15X,F10.2/)
  355 CONTINUE
C
C     COMPUTING AN INTERNAL RATE OF RETURN USING CASH FLOWS(ANNUAL)
C
      VAL = 0.0
      DO 362 IR=1,MYRUP
      VAL = VAL + TACASH(IR)
  362 CONTINUE
      IF(VAL.LE.0.0) GO TO 385
      R1 = 0.0
      R2 = 0.01
      RDIFF = 0.01
C-----CURRENT ASSET VALUE
      CASSET = 0.0
      DO 364 IG=1,9
      CASSET = CASSET + CURVAL(IG)
  364 CONTINUE
      DO 366 NG=1,NSTOCK
      CASSET = CASSET + VALCRP(NG)
```

```
  366 CONTINUE                                                          PRINTR    245
      CASSET = CASSET - CAPT.(1) - SDEBT + WCAPT                        PRINTR    246
      ILIFE = 0                                                         PRINTR    247
      DO 368 LG=1,LIFE                                                  PRINTR    248
      ILIFE = ILIFE + LG                                                PRINTR    249
  368 CONTINUE                                                          PRINTR    250
      CASSET = CASSET + LVALJE*FLOAT(MYRUP/ILIFE)                       PRINTR    251
      VAL1 = 0.0                                                        PRINTR    252
      DO 370 IYA=1,MYRUP                                                PRINTR    253
      DENOM = (1.0 + R1)**IYA                                           PRINTR    254
      VAL1 = VAL1 + TACASH(IYA)/DENOM                                   PRINTR    255
  370 CONTINUE                                                          PRINTR    256
      DV1 = -DASSET + VAL1 + CASSET/DENOM                               PRINTR    257
C-----THE SEARCH LOOP                                                   PRINTR    258
      DO 380 ICNT=1,50                                                  PRINTR    259
      VAL2 = 0.0                                                        PRINTR    260
      DO 373 IYB=1,MYRUP                                                PRINTR    261
      DENOM = (1.0 + R2)**IYB                                           PRINTR    262
      VAL2 = VAL2 + TACASH(IYB)/DENOM                                   PRINTR    263
  373 CONTINUE                                                          PRINTR    264
      DV2 = -DASSET + VAL2 + CASSET/DENOM                               PRINTR    265
      DDVDR = (DV2 - DV1)/(R2 - R1)                                     PRINTR    266
      R1 = R2                                                           PRINTR    267
      R2 = R2 - DV2/DDVDR                                               PRINTR    268
      IF(ABS(R1 - R2).LE.RDIFF) GO TO 390                               PRINTR    269
      DV1 = DV2                                                         PRINTR    270
  380 CONTINUE                                                          PRINTR    271
C-----PRINTING THE BEST IRR ACHIEVED IN 50 CYCLES OF THE SEARCH LOOP    PRINTR    272
      PRINT382,R1,R2                                                    PRINTR    273
  382 FORMAT(//5X,*THE BEST INTERNAL RATES OF RETURN ACHIEVED IN 50 *   PRINTR    274
     1*CYCLES OF THE SEARCH LOOP*//10X,*OLD =*F10.3,10X,*NEW =*,F10.3//) PRINTR    275
      RETURN                                                            PRINTR    276
C-----PRINT THAT NO IRR IS POSSIBLE SINCE TOTAL CASH FLOW IS NEGATIVE   PRINTR    277
  385 PRINT387                                                          PRINTR    278
  387 FORMAT(5X,*NO INTERNAL RATE OF RETURN IS CALCULATED SINCE THE*/5X, PRINTR    279
     1* TOTAL CASH FLOW OF THE PERIOD IS NEGATIVE */)                   PRINTR    280
      RETURN                                                            PRINTR    281
C-----PRINTING THE INTERNAL RATE OF RETURN OF CASH FLOW TO ASSETS       PRINTR    282
  390 PRINT395,R2                                                       PRINTR    283
  395 FORMAT(//5X,*THE INTERNAL RATE OF RETURN OF THE PROJECT IS*,F10.3) PRINTR    284
      PRINT399                                                          PRINTR    285
C                                                                       PRINTR    286
      RETURN                                                            PRINTR    287
      END                                                               PRINTR    288
```

GE

```
SUBROUTINE REPRO      73/73    OPT=1                                    FTN 4.5+410          07/19/76 .17.40.45

                 SUBROUTINE REPRO(N)                                                          REPRO      2
                                                                                              REPRO      3
           C        THIS SUBROUTINE CALCULATES THE EXPECTED TIME AND BIRTH RATE               REPRO      4
           C        OF EACH SUBPOPULATION OF MARKET BREEDING HEIFERS,                         REPRO      5
           C        REPLACEMENT HEIFERS, AND MATURE COWS.                                     REPRO      6
           C                                                                                  REPRO      7
                 COMMON/SYSVAR/T,DT,KK(9),KNOWS(9),SUBPOP(9,40),POP(9),ROUT(9),               REPRO      8
                1              DELAY(9),DELAYP(9)                                             REPRO      9
                 COMMON/REPROD/TBRTH(2,16),EEST,GEST,TEST(3,40),DEGCAV,ENDCAV,                REPRO     10
                               INTCAV,DP,TEMC,CONCP(5),POPT(11),CPAT(3,40,13),                REPRO     11
                1              CTIM(3,40,13),CFC,INB(3,40),MR(3),IPRES,LAC,                   REPRO     12
                2              PCC(12,14),DSP(11),WF(16),ICOUNT(2,16),CSM,CDIF,               REPRO     13
                3              KC,GEST,PRC(2,16,13),HP(2,16,13),PI(2,16,13),ML,               REPRO     14
                4              MAXHF(2),HFCUT,AFEST(3,40),WFEST(3,40),FEST(2,16),             REPRO     15
                5              COMFW(2,10),IZZY(2),SCNFW(2),CLOCP(3,13),MOMX                  REPRO     16
                6              POSTFB(5,9),CNCAL(9),FEEDAL(9),PHGAL(9),CULFRC(10),            REPRO     17
                 COMMON/CNTROL/TDHR(9),TDNC(9),TDMIF(9),TDMIC(9),AHR(5),MHR(5),               REPRO     18
                1              OLDMHR(5),PHGFRC(9,20),CNCFRC(9,20),ACFEED(9,2),               REPRO     19
                2              SPLIT,DURA(3),FRAD(3),TFRAC(10,2),ASFLL(9),ADDRT(9),           REPRO     20
                3              C1,C2,C3,C4,C5,C6,C7,C8,C9,C10,C11,TWEAN,TCULL                 REPRO     21
                4              GROWTH(2,2,2),POTFD(5,30),XCPROD(20),XCOJAL(20),               REPRO     22
                 COMMON/SAVER1/ITER,NCOPPS,IPRINT,ENGLSH,DAYS,NITER,RETIME,PRTVL,             REPRO     23
                               ISTART,IFLAG,LAPFL(20),DDFEED(10),DDFTON(9),                   REPRO     24
                               CLIMIT(2 ),ESEWCH,PADJST                                       REPRO     25
                 COMMON/HFDVAL/W(9,40),GRADF(9,40),HSTMAX(9),RIN(9,40),FATFAC,                REPRE      1
                1              FMATUR(11),DGAIN(9,40),PAWATE(9),TWOLD,TYRLNG                  REPRE      2
                 EQUIVALENCE(GROWTH(1,1,1),PPW(1,1))                                          REPRE      3
                 DIMENSION PPW(2,20),DPPE(5),PCTP(5)                                          REPRE      4
                 DATA DPPE/0.548,0.2055,0.1244,0.1233,0.0959/                                 REPRE      5
                 DATA PCTP/.59,0.75,.85,0.9,.95/                                              REPRE      6
                 DATA KPPD/5/                                                                 REPRE      7
                 ALPHA = 0.80168832                                                           REPRE      8
                 BETA = 0.23400279                                                            REPRE      9
                 FSVC = 0.72                                                                  REPRE     10
           C                                                                                  REPRE     11
           C-----COMPUTING THE NEW TIME OF FEMALE ESTROUS                                     REPRE     12
           C                                                                                  REPRE     13
                 IF((TBRD(1).LT.0.0).OR.(TBRD(2).LT.0.0)) GO TO 105                           REPRE     14
                 TBMN = AMIN1(TBRD(1),TBRD(2))                                                REPRE     15
                 GO TO 11                                                                     REPRE     16
             105 TBMN = AMAX1(TBRD(1),TBRD(2))                                                REPRE     17
             110 CONTINUE                                                                     REPRE     18
                 IF((TBRD(1).EQ.TBMN).AND.(N.EQ.1)) GO TO 120                                 REPRE     19
                 IF(TBRD(2).NE.TBMN) GO TO 1                                                  REPRE     20
                 IF(N.EQ.2) GO TO 120                                                         REPRE     21
                 IF((N.NE.3).OR.(POP(2).GT.0.0)) GO TO 140                                    REPRE     22
           C                                                                                  REPRE     23
           C     ESTROUS DETERMINED FOR HEIFERS                                               REPRE     24
           C                                                                                  REPRE     25
                                                                                              REPRE     26
             120 NUM = 0                                                                      REPRE     27
                 ASUM = 0.0                                                                   REPRE     28
                 DO 130 MM=2,3                                                                REPRE     29
                 KI = KK(MM)                                                                  REPRE     30
                 DO 125 JM=1,KI                                                               REPRE     31
                 IF(CTIM(MM,JM,1).LE.0.0) GO TO 125                                           REPRE     32
                 ASUM = ASUM + CTIM(MM,JM,1)                                                  REPRE     33
                 NUM = NUM + 1                                                                REPRE     34
             125 CONTINUE                                                                     REPRE     35
             130 CONTINUE                                                                     REPRE     36
                 DP = TABLI(DPPE,PCTP,PPW(1,1),KPPD)                                          REPRE     37
                 R = RANF(-1.)                                                                REPRE     38
                 RANDF = 1.0 + R*0.2*(1.0 - PPW(1,1))                                         REPRE     39
                 IF(NUM .EQ.0) GO TO 135                                                      REPRE     40
                 TEST(1,1) = ((ASUM/FLOAT(NUM)) + DEST + DP)*RANDF                            REPRE     41
                 GO TO 140                                                                    REPRE     42
             135 TEST(1,1) = (CTIM(1,1,1) + DEST + DP)*RANDF                                  REPRE     43
             140 CONTINUE                                                                     REPRE     44
           C                                                                                  REPRE     45
           C     RESETTING HEIFER PREGNANCY PATTERNS TO ZERO                                  REPRE     46
           C                                                                                  REPRO     27
                 K=KK(N)                                                                      REPRO     28
                 MEM=1                                                                        REPRO     50
                 IF(N .GT. 1)1,2                                                              REPRO     51
                 TBD=TBRD(2)+INT(T)                                                           REPRO     52
                 DRB=DURB(2)                                                                  REPRO     53
                 MAXHF(M)=0.0                                                                 REPRO     54
                 DO 14 MM=1,16
```

```
SUBROUTINE REPRO      73/73   OPT=1                                   FTN 4.5+410          07/19/76 .17.40.45

      DO 14 MP=1,13                                                                REPRO      55
      HP(M,MH,MP)=0.0                                                              REPRO      56
      PT(M,MH,MP)=0.0                                                              REPRO      57
   14 CONTINUE                                                                     REPRO      58
      KOUNT = 0                                                                    REPRO      59
      DO 18 IFF = 1,K                                                              REPRO      60
      IF(SUBPOP(N,IFF) .LE. 0.0) GO TO 17                                          REPRO      61
      KOUNT = KOUNT+1                                                              REPRO      62
      TEST(N,IFF) = FEST(M,KOUNT)                                                  REPRO      63
      GO TO 18                                                                     REPRO      64
   17 TEST(N,IFF) = 0.0                                                            REPRO      65
   18 CONTINUE                                                                     REPRO      66
      GO TO 5                                                                      REPRO      67
    2 TBD=TBPD(1)+INT(T)                                                           REPRO      68
C                                                                                  REPRE      47
C     ESTROUS FOR MATURE COWS                                                      REPRE      48
C                                                                                  REPRE      49
      DRB=CUFB(1)                                                                  REPRO      69
      DO 4 IA=2,K                                                                  REPRO      70
      IB=IA-1                                                                      REPRO      71
      R=RANF(-1.)                                                                  REPRO      72
      PCP(IA) = 0.0                                                                REPRE      50
      DP = TABLI(DPPE,PCTP,PPW(N,IA),KPPC)                                         REPRE      51
      R = RANF(-1.0)                                                               REPRE      52
      RANDF = 1.0 + R*0.2*(1.0 - PPW(N,IA))                                        REPRE      53
      TEST(N,IA) = (CTIM(N,IB,1) + DEST + DP)*RANDF                                REPRE      54
    4 CONTINUE                                                                     REPRO      74
    5 TEND=TBD+DRB                                                                 REPRO      75
      ISY=INT((TEND-TBD)/DEST)+1                                                   REPRO      76
      DO 6 JI=1,K                                                                  REPRO      77
      INB(N,JI) = 1                                                                REPRE      55
      DO 6 JX=1,13                                                                 REPRO      78
      CPAT(N,JI,JX)=0.0                                                            REPRO      79
    6 CTIM(N,JI,JX)=0.0                                                            REPRO      80
      KCNT=1                                                                       REPRO      81
      DO 400 I=1,K                                                                 REPRO      82
      IW=I-1                                                                       REPRO      83
      IF(SUBPOP(N,I).GT.0.0) GO TO 150                                             REPRE      56
      GO TO 210                                                                    REPRE      57
C                                                                                  REPRE      58
C-----DETERMINING THE NUMBER OF SERVICES WITHIN THE BREEDING PERIOD                REPRE      59
C                                                                                  REPRE      60
  150 IF((TEST(N,I).GT.0.0).AND.(TEST(N,I).LE.TEND)) GO TO 155                     REPRE      61
      IF(N.GT.1) GO TO 180                                                         REPRE      62
      GO TO 210                                                                    REPRE      63
  155 DIF = TBD - TEST(N,I)                                                        REPRE      64
      IF(KCNT.EQ.1) JLOW = I                                                       REPRE      65
      IF(DIF) 160,9,9                                                              REPRE      66
  160 TFSRV = TEST(N,I)                                                            REPRE      67
      GO TO 10                                                                     REPRE      68
    9 IN=INT(DIF/DEST)+1                                                           REPRO      91
      TFSRV =TEST(N,I)+(DEST*IN)                                                   REPRO      92
   10 INB(N,I)=INT((TEND-TFSRV)/DEST)+1                                            REPRO      93
      INN=INB(N,I)                                                                 REPRO      94
      IF(N .GT. 1)11,12                                                            REPRO      95
   11 ICOUNT(M,KCNT)=INN                                                           REPRO      96
C                                                                                  REPRE      69
C-----COMPUTING THE BIRTH PATERN FOR HEIFERS                                       REPRE      70
C                                                                                  REPRE      71
      AGE = DELAY(2) + DELAY(8) - FLOAT(K-I)*DT                                    REPRE      72
      IF(AGE.GT.1.0) GO TO 165                                                     REPRE      73
      WMIN = BETA*WGTMAX(1)*EXP(ALPHA*AGE)                                         REPRE      74
      GO TO 170                                                                    REPRE      75
  165 WMIN = WGTMAX(1)*(1.0 - 0.477*EXP(-0.087*(AGE - 1.0)))                       REPRE      76
  170 PBW = W(N,I)/WMIN                                                            REPRE      77
      PRTG = (PPW(N,KCNT) + 3.0*PBW + 9.0*(PBW - PPW(N,KCNT))                      REPRE      78
     1       + 3.0*(PBW - 1.0))/4.0                                                REPRE      79
      IF(PRTG.GT.1.0) PRTG = 1.0                                                   REPRE      80
      SPRT = PRTG*FSVC*POPT(1)                                                     REPRE      81
      DO 175 J=1,INN                                                               REPRE      82
      JA=J-1                                                                       REPRO      99
      PREHP = CONCP(J)*SPRT                                                        REPRE      83
      IF(PREHP.GT.1.0) PREHP = 1.0                                                 REPRE      84
      HP(M,KCNT,J) = PREHP                                                         REPRE      85
      CPAT(N,I,J)=HP(N,KCNT,J)*CFC                                                 REPRO     101
      PT(M,KCNT,J)=TFSRV+(DEST*JA)                                                 REPRO     102
      CTIM(N,I,J) = PT(M,KCNT,J) + DEST                                            REPRO     103
```

```
SUBROUTINE REPRO      73/73    OPT=1                                    FTN 4.5+410          07/19/76 .17.40.45

      175 CONTINUE                                                                          REPRE      86
      180 CONTINUE                                                                          REPRE      87
          MAXHF(M) = KCNT                                                                   REPRE      88
          KCNT=KCNT+1                                                                       REPRO     105
          GO TO 400                                                                         REPRO     106
C                                                                                           REPRE      89
C-----COMPUTING THE BIRTH PATTERN FOR MATURE COWS                                           REPRE      90
C                                                                                           REPRE      91
       12 IX=I+1                                                                            REPRO     107
          TIN = DELAY(N)/FLOAT(K)                                                           REPRE      92
          TAU = (TIN*FLOAT(I)) + DELAY(2) + DELAY(8) - 2.0                                  REPRE      93
          WMIN = WGTMAX(1)*(1.0 - 0.477*EXP(-0.0879*TAU))                                   REPRE      94
          PBW = W(N,I)/WMIN                                                                 REPRE      95
          PRTG = (PPW(N,I) + 3.0*PBW + 9.0*(PBW - PPW(N,I))                                 REPRE      96
     1          + 3.0*(PBW - 1.0))/4.0                                                      REPRE      97
          IF(PRTG.GT.1.0) PRTG = 1.0                                                        REPRE      98
          DO 200 JB=1,INN                                                                   REPRO     108
          LA=JB-1                                                                           REPRO     109
          PRECP = CONCP(JB)*POPT(IX)*PRTG*FSVC                                              REPRE      99
          IF(PRECP.GT.1.0) PRECP = 1.0                                                      REPRE     100
          PCP(IX) = PRECP                                                                   REPRE     101
          CPAT(N,I,JB) = PRECP*CFC                                                          REPRE     102
          CTIM(N,I,JB)=TFSEV+(DEST*LA)+GEST                                                 REPRO     111
      200 CONTINUE                                                                          REPRO     103
          IF(I .EQ. 1)WF(1)=1.                                                              REPRO     112
          WF(I) = GEST*KK(1)/DELAY(1)                                                       REPRO     113
      210 CONTINUE                                                                          REPRO     104
      400 CONTINUE                                                                          REPRO     121
          IF(N.EQ.1) GO TO 511                                                              REPRE     105
          IF((N.EQ.2).AND.(POP(3).GT.0.0)) GO TO 500                                        REPRE     106
          SPOP = 0.0                                                                        REPRO     123
          SUM = 0.0                                                                         REPRO     124
          DO 455 JQ=2,3                                                                     REPRO     125
          JK=KK(JQ)                                                                         REPRO     126
          DO 450 KJ=1,JK                                                                    REPRO     127
          IF(SUBPOP(JQ,KJ) .LE. 0.0)GO TO 450                                               REPRO     128
          IX=INB(JQ,KJ)                                                                     REPRO     129
          SUM=SUM+(CPAT(JQ,KJ,IX)*SUBPOP(JQ,KJ))                                            REPRO     130
          SPOP=SPOP+SUBPOP(JQ,KJ)                                                           REPRO     131
      450 CONTINUE                                                                          REPRO     132
      455 CONTINUE                                                                          REPRO     133
          PCP(1) = (SUM/SPOP)/CFC                                                           REPRO     134
      500 CONTINUE                                                                          REPRO     135
          DO 20 JQN=1,16                                                                    REPRO     137
          FEST(M,JQN) = 0.0                                                                 REPRO     138
       20 CONTINUE                                                                          REPRO     139
C                                                                                           REPRO     140
C         SHIFTING CPAT, CTIM, AND INB TO ACCOUNT FOR GESTATION MATURATION                  REPRO     141
C                                                                                           REPRO     142
          IFRWRD = (GEST/DT) + 0.5                                                          REPRO     143
          ISHIFT = 3                                                                        REPRO     144
          IF(JLOW+KCNT-1+IFRWRD.LE.KK(N)) ISHIFT = 1                                        REPRO     145
          IF(JLOW+IFRWRD.GE.KK(N)) ISHIFT = 2                                               REPRO     146
          IF(ISHIFT.NE.1) GO TO 456                                                         REPRO     147
C-----CASE1.....NO HEIFERS MATURED OUT OF THAT COHORT BEFORE CALVING                         REPRO     148
          JCHLOW = JLOW + IFRWRD                                                            REPRO     149
          JCHUP = JCHLOW + KCNT - 1                                                         REPRO     150
          GO TO 458                                                                         REPRO     151
      456 IF(ISHIFT.NE.2) GO TO 457                                                         REPRO     152
C-----CASE2....ALL HEIFERS MATURED OUT OF THAT COHORT BEFORE CALVING                         REPRO     153
          JSFLOW = JLOW                                                                     REPRO     154
          JSPUP = JLOW + KCNT - 1                                                           REPRO     155
          GO TO 464                                                                         REPRO     156
      457 IF(ISHIFT.NE.3) STOP                                                              REPRO     157
C-----CASE3...SOME HEIFERS MATURED OUT OF THAT COHORT BEFORE CALVING                         REPRO     158
          JCHLOW = JLOW + IFRWRD                                                            REPRO     159
          JCHUP = KK(N) - 1                                                                 REPRO     160
          JSFLOW = KK(N) - IFRWRD                                                           REPRO     161
          JSPUP = JLOW + KCNT - 1                                                           REPRO     162
C-----COMPUTING THE SHIFTED VALUES                                                          REPRO     163
      458 CONTINUE                                                                          REPRO     164
          DO 460 JCH=JCHLOW,JCHUP                                                           REPRO     165
          DO 459 KCH=1,ISX                                                                  REPRO     166
          CTIM(N,JCH,KCH) = CTIM(N,JCH-IFRWRD,KCH)                                          REPRO     167
          CPAT(N,JCH,KCH) = CPAT(N,JCH-IFRWRD,KCH)                                          REPRO     168
      459 CONTINUE                                                                          REPRO     169
          INB(N,JCH) = INB(N,JCH-IFRWRD)                                                    REPRO     170
```

```
SUBROUTINE REPRO      73/73   OPT=1                          FTN 4.5+413        07/19/76 .17.40.45

          460 CONTINUE                                                          REPRO     171
              IF(ISHIFT.EQ.1) GO TO 501                                         REPRO     172
          464 CONTINUE                                                          REPRO     173
              DO 470 KSP=1,ISX                                                  REPRO     174
              SPOP = 0.0                                                        REPRO     175
              DO 465 JS=JSPLOW,JSPUP                                            REPRO     176
              IF(INB(N,JS).LT.KSP) GO TO 465                                    REPRO     177
              SPOP = SPOP + SUBPOP(N,JS)                                        REPRO     178
          465 CONTINUE                                                          REPRO     179
              STIM = 0.0                                                        REPRO     180
              SPAT = 0.0                                                        REPRO     181
              DO 468 JSP=JSPLOW,JSPUP                                           REPRO     182
              STIM = STIM + CTIM(N,JSP,KSP)*SUBPOP(N,JSP)                       REPRO     183
              SPAT = SPAT + CPAT(N,JSP,KSP)*SUBPOP(N,JSP)                       REPRO     184
          468 CONTINUE                                                          REPRO     185
              CPAT(N,KK(N),KSP) = SPAT/SPOP                                     REPRO     186
              CTIM(N,KK(N),KSP) = STIM/SPOP                                     REPRO     187
          470 CONTINUE                                                          REPRO     188
              INBMAX = 1                                                        REPRO     189
              DO 475 JP=JSPLOW,JSPUP                                            REPRO     190
              IF(INB(N,JP).GT.INBMAX) INBMAX = INB(N,JP)                        REPRO     191
          475 CONTINUE                                                          REPRO     192
              INB(N,KK(N)) = INBMAX                                             REPRO     193
          501 CONTINUE                                                          REPRO     194
        C                                                                       REPRO     195
        C     SCALING FACTOR ON BIRTHS TO REFLECT MANAGEMENT + ENVIRONMENT      REPRO     196
        C                                                                       REPRO     197
              JZUP = KK(N)                                                      REPRO     198
              DO 520 JZ=1,JZUP                                                  REPRO     199
              KZUP = INB(N,JZ)                                                  REPRO     200
              DO 510 KZ=1,KZUP                                                  REPRO     201
              CPAT(N,JZ,KZ) = PADJST*CPAT(N,JZ,KZ)                              REPRO     202
          510 CONTINUE                                                          REPRO     203
          520 CONTINUE                                                          REPRO     204
              RETURN                                                            REPRO     205
              END                                                               REPRO     206
```

```
      SUBROUTINE RESPNS                                                 RESPNS     2
C        VERSION AS OF 12/1/75                                          RESPNS     3
C                                                                       RESPNS     4
C     THIS SUBROUTINE CARRIES OUT TWO TYPES OF OPERATIONS.  FIRST, IT   RESPNS     5
C     RECOGNIZES THAT DECISION POINTS WERE REACHED, AND READS IN THE    RESPNS     6
C     APPROPRIATE CONTROL VARIABLES.  SECOND, IT EXECUTES DECISIONS     RESPNS     7
C     BASED ON THESE CONTROL VARIABLES.  SOME EXAMPLES ARE CULLING,     RESPNS     8
C     WEANING, ETC.                                                     RESPNS     9
C                                                                       RESPNS    10
C-----THE FOLLOWING CONTROL VARIABLES ARE USED....                      RESPNS    11
C                                                                       RESPNS    12
C        ADDRT(I) = ANNUAL RATE OF ADDITION OF ANIMALS TO COHORT I      RESPNS    13
C        AGEMIN = MINIMUM AGE OF CALVES TO BE WEANED                    RESPNS    14
C        ASELL(I) = FRACTION OF COHORT I SOLD THIS TIME UNTERVAL        RESPNS    15
C        CATTIN(I,K,L) = THE TDN ALLOCATION PER MEMBER OF COHORT I PER  RESPNS    16
C                        DAY OF FEED TYPE K UNDER FEEDING PLAN L        RESPNS    17
C        CNCAL(I) = FEED CONCENTRATE ALLOCATION TO COHORT I             RESPNS    18
C        CNCFRC(I,N) = FRACTION OF CONCENTRATE ALLOCATION FROM CROP N   RESPNS    19
C        CULFRC(J) = FRACTION OF SUBPOP(1,J) CULLED THIS INCREMENT      RESPNS    20
C        CSALES(N) = AMOUNT OF FEED STOCK N SOLD IN THIS TIME INCREMENT RESPNS    21
C        DISTFD(I,N,L) = FRACTION OF TDN ALLOCATED TO COHORT I FROM FEED RESPNS   22
C                        STOCK N UNDER FEEDING PLAN L                   RESPNS    23
C        DURB(I) = DURATION OF BREEDING FOR COHORT I ANIMALS            RESPNS    24
C        FEEDAL(I) = ROUGHAGE FEED ALLOCATION TO COHORT I               RESPNS    25
C        MHR(L) = MECHANICAL HARVESTING RATE FROM LAND AREA L           RESPNS    26
C        POSTRB(L,I) = FRACTION OF POP(I) GRAZING IN LAND AREA L        RESPNS    27
C        RHGFRC(I,N) = FRACTION OF ROUGHAGE ALLOCATION FROM CROP N      RESPNS    28
C        STKPUR(N) = AMOUNT OF CROP N PURCHASED THIS TIME INCREMENT     RESPNS    29
C        TBRD(I) = ONSET OF BREEDING FOR COHORT I ANIMALS               RESPNS    30
C        TCULL = TIME FOR CULLING OF THE MATURE COW HERD                RESPNS    31
C        TFRAC(K,I) = FRACTION OF WEANED FEMALE CALVES FROM SUBPOP(8,K) RESPNS    32
C                     TRANSFERRED TO COHORT I                           RESPNS    33
C        TWEAN = TIME OF CALF WEANING                                   RESPNS    34
C                                                                       RESPNS    35
C-----END OF CONTROL VARIABLE LIST                                      RESPNS    36
C                                                                       RESPNS    37
C                                                                       RESPNS    38
      COMMON/SYSVAR/T,DT,KK(9),KNOWS(9),SUBPOP(9,40),POP(9),ROUT(9),    RESPNS    39
     1              DELAY(9),DELAYP(9)                                  RESPNS    40
      COMMON/CNTROL/POSTRB(5,9),CNCAL(9),FEEDAL(9),RHGAL(9),CULFRC(10), RESPNS    41
     1              TDNR(9),TDNC(9),TDMIR(9),TDMIC(9),AHP(5),MHR(5),    RESPNS    42
     2              OLDMHR(5),RHGFRC(9,20),CNCFRC(9,20),ACFEED(9,2),    RESPNS    43
     3              SPLIT,DURB(9),TBRD(9),TFRAC(10,2),ASELL(9),ADDRT(9), RESPNS    44
     4              C1,C2,C3,C4,C5,C6,C8,C9,C10,C11,TWEAN,TCULL         RESPNS    45
      COMMON/HRDVAL/WT(9,40),GRADE(9,40),WGTMAX(9),RIN(9,40),FATFAC,    RESPNS    46
     1              FMATUR(11),DGAIN(9,4 ),PAWATE(9),TWOLD,TYRLNG       RESPNS    47
      COMMON/FIELD/NSTOCK,FSTOCK(20),STKFED(20),STKPUR(20),PRQUAL(20),  RESPNS    48
     1              SPOIL(20),STKLOS(20),FQUAL(20),FRCLOS(20),CPURCH(20), RESPNS  49
     2              CROP(20,2),CROPG(20),CFEED(20,2),CROPCL(20,2)       RESPNS    50
      COMMON/MONEY/ASALES(10),CSALES(20),AREV(10),CREV(21),CASH(26),    RESPNS    51
     1              TAGRP(15),TANP(15),TAXES(15),TAGRPO(15),TANPO(15),  RESPNS    52
     2              TAXESO(15),NACOST,NCCOST,CAPTL(6),TACASH(15),       RESPNS    53
     3              LVALUE,LIFE,ANREV(15),AREVO(15),ANCOST(15),         RESPNS    54
     4              ACOST(20),ACOSTO(15),CCOST(21),TACSHO(15),          RESPNS    55
     5              ASOLD(10),CSOLD(20),SALES,DEBTO                     RESPNS    56
      COMMON/REPROD/TURTH(2,16),DEST,GEST,TEST(3,40),BEGCAV,ENDCAV,     RESPNS    57
     1              INTCAV,D1,TEBC,CONCP(3),POPT(11),CPAT(3,40,13),     RESPNS    58
     2              CTIM(3,40,13),CFC,INB(3,40),NR(3),IPREG,LAC,        RESPNS    59
     3              POD(10,14),POP(11),WF(10),ICOUNT(2,16),DSM,CDIF,    RESPNS    60
     4              KONGEST,PHO(2,16,13),HP(2,16,13),PT(2,16,13),ML,    RESPNS    61
     5              MAXHF(2),HFOUT,AFEST(3,4 ),WFEST(3,40),FEST(2,16),  RESPNS    62
     6              CONNEW(2,16),KCNT(2),SONEW(2),OLDCP(3,13),MCMX      RESPNS    63
      COMMON/ENERGY/TDNM,YMIN-K(7),SMM,DIFM,KM,TCVMM,CFE,CFO,ACDMIR(9), RESPNS    64
     1              ACDMIC(9),RTDN(9),CTDN(9),HSM,WDIF,KW,MEANWT(2,16), RESPNS    65
     2              PDI(13)                                             RESPNS    66
      COMMON/DIRECT/CFINAL,REMOVL,FRCDDG(5),CATTIN(9,2,4),NALTER,       RESPNS    67
     1              AGEMIN,TMHE(5),REACTD(21),FPLANS(4),DISTFD(9,20,4)  RESPNS    68
      COMMON/BLOCK/DEPRT,SEPRT,BEGRT,PRTCHG,PRTVL1,PRTVL2,DUR,          RESPNS    69
     1              PLR(9),DR(9),PGFALE(9),TSPRNG,TFALL,HLENGH          RESPNS    70
      COMMON/EARTH/ DIGEST(5),GRN(5),LAND(5),NLANDS,SNZERO,SMZERO,      RESPNS    71
     1              STOCKL(9),ACPROD(9)                                 RESPNS    72
      COMMON/MATERL/RESORC(11),HRSCRC,OVHEAD,DEFLAT,SPBRED,SPVACC,      RESPNS    73
     1              HRCALV,HRFED1,HRFED2,HRBRED,HRVACC,HRWEAN,HRCULL,   RESPNS    74
     2              HRCAST,HRSEED,HRFERT,HRHARV,HREDIP,HRFCAP,HRMAIN,   RESPNS    75
     3              SPUTL1,SPUTL2,SPUTL3,SPUTL4,SPUTL5,SPSEED,SPFERT,   RESPNS    76
     4              SPREP1,SPREP2,SPREP3,HLEASE                         RESPNS    77
      COMMON/SAVER1/GROWTH(5,2,11),ACTED(5,2 ),XCPROD(20),XCQUAL(20),   RESPNS    78
     1              ITER,NOREPS,IPRINT,NGLSH,DAYS,NITER,PRTIME,PRTVL,   RESPNS    79
     2              ISTART,IFLAG,LABELF(20),ODFEED(10),ODFTDN(9),       RESPNS    80
     3              CLIMIT(2),FSEARCH,PADJST                            RESPNS    81
      COMMON/SAVER5/SDEBT,SDEBTR,SELPAY,SLOAN,PROTAX,SDEBTO,PRODUC(9)   RESPNS    82
```

```
      DIMENSION CPOP(9,40)
C
      DIFF = DT/2.
      YEAR = T - INT(T+0.001)
C-----------------------------------------------------------------------
C     SPRING GROWTH DECISION POINT
C-----------------------------------------------------------------------
      IF((YEAR.LE.TSPRNG-DIFF).OR.(YEAR.GT.TSPRNG+DIFF)) GO TO 600
      CALL GENERT(T,DT,NSTOCK,1)
      DO 510 NA=1,NLANDS
      READ(1,505) (PDSTRB(NA,IN),IN=1,9)
  505 FORMAT(10F8.0)
  510 CONTINUE
      READ(1,505) (CSALES(NB),NB=1,NSTOCK)
      READ(1,505) (STKPUR(NF),NF=1,NSTOCK)
      READ(1,505) (XCPROD(NC),NC=1,NSTOCK)
      READ(1,505) (XCDUAL(ND),ND=1,NSTOCK)
      READ(1,505) CFINAL,REMOVL
      READ(1,505) TBRD(1),TBRD(2),TWEAN,TCULL
      READ(1,505) (TMHR(NO),NO=1,5)
C
C     PRINTING CONTROL VARIABLES THAT HAVE BEEN READ IN
C
      PRINT550,T
  550 FORMAT(*1*//5X,*CONTROL VARIABLE VALUES ENTERED AT T=*F7.4)
      PRINT551
  551 FORMAT(//5X,*PDSTRB(N,I),N IS DOWN, I IS ACROSS*/)
      DO 557 NLA=1,NLANDS
      PRINT555,(PDSTRB(NLA,ILA),ILA=1,9)
  555 FORMAT(10F12.3)
  557 CONTINUE
      PRINT561
  561 FORMAT(//5X,*CSALES(N),N IS ACROSS*/)
      PRINT555,(CSALES(NC),NC=1,NSTOCK)
      PRINT562
  562 FORMAT(//5X,*STKPUR(N),N IS ACROSS*/)
      PRINT555,(STKPUR(NC2),NC2=1,NSTOCK)
      PRINT566,CFINAL,REMOVL
  566 FORMAT(//5X,*CFINAL=*F10.3,10X,*REMOVL=*F10.3)
      PRINT568
  568 FORMAT(//5X,*TMHR(L), L IS ACROSS*/)
      PRINT555,(TMHR(LAZ),LAZ=1,5)
      PRINT570,TBRD(1),TBRD(2),TWEAN,TCULL
  570 FORMAT(//5X,*TBRD(1)=*F10.3,10X,*TBRD(2)=*F10.3,10X,
     1*TWEAN=*F10.3,10X,*TCULL=*F10.3)
C-----------------------------------------------------------------------
C     BREEDING DECISION POINTS
C-----------------------------------------------------------------------
  600 IF((YEAR.LE.TBRD(1)-DIFF).OR.(YEAR.GT.TBRD(1)+DIFF)) GO TO 650
      CALL GENERT(T,DT,NSTOCK,1)
      READ(1,505) DURB(1),DURB(2)
      READ(1,505) (REACTD(NG),NG=1,NSTOCK)
      READ(1,505) (FPLANS(LZ),LZ=1,4)
      DO 615 LY=1,4
      READ(1,505) (CATTIN(IRA,1,LY),IRA=1,9)
      READ(1,505) (CATTIN(IRB,2,LY),IRB=1,9)
      DO 610 NY=1,NSTOCK
      READ(1,505) (DISTFD(IRC,NY,LY),IRC=1,9)
  610 CONTINUE
  615 CONTINUE
      READ(1,505) TWEAN,TCULL
C
C     PRINTING CONTROL VARIABLES THAT HAVE BEEN READ IN
C
      PRINT550,T
      PRINT620,DURB(1),DURB(2)
  620 FORMAT(//5X,*DURB(1)=*F12.3/5X,*DURB(2)=*F12.3)
      PRINT621,TWEAN,TCULL
  621 FORMAT(//5X,*TWEAN=*F12.3/5X*TCULL=*F12.3)
      PRINT622
  622 FORMAT(//5X,*FEED PLANS PROJECTED FOR FUTURE USE*/)
      DO 632 IPLN=1,4
      PRINT624,IPLN,FPLANS(IPLN)
  624 FORMAT(10X,*---FEED PLAN*I2*---*//15X,*ENDING DATE*F8.4/)
      PRINT626
  626 FORMAT(15X,*COHORT*,10X,*RHG. TON/ANIMAL*,10X,*CNC. TON/ANIMAL*,
     110X,*(KG TON/DAY)*/)
      DO 630 LPLN=1,9
      PRINT628,LPLN,CATTIN(LPLN,2,IPLN),CATTIN(LPLN,1,IPLN)
  628 FORMAT(17X,I2,14X,F10.2,15X,F10.2)
  630 CONTINUE
```

```
  632 CONTINUE
C
  650 IF((YEAR.LE.TBRD(2)-DIFF).OR.(YEAR.GT.TBRD(2)+DIFF)) GO TO 680
      IF((YEAR.GT.TBRD(1)-DIFF).AND.(YEAR.LE.TBRD(1)+DIFF)) GO TO 680
      CALL GENERT(T,DT,NSTOCK,1)
      READ(1,555) DURB(1),DURB(2)
      READ(1,555) (REASTD(NJ),NJ=1,NSTOCK)
      READ(1,555) (FPLANS(LX),LX=1,4)
      DO 660 LV=1,4
      READ(1,555) (CATTIN(IVA,1,LV),IVA=1,9)
      READ(1,555) (CATTIN(IVB,2,LV),IVB=1,9)
      DO 655 NV=1,NSTOCK
      READ(1,555) (DISTFD(IVC,NV,LV),IVC=1,9)
  655 CONTINUE
  660 CONTINUE
      READ(1,555) TWEAN,TCULL
C-----------------------------------------------------------------------
C     CALF WEANING DECISION POINT
C-----------------------------------------------------------------------
  680 IF((YEAR.LE.TWEAN-DIFF).OR.(YEAR.GT.TWEAN+DIFF)) GO TO 800
      CALL GENERT(T,DT,NSTOCK,1)
      DO 685 JV=1,2
      READ(1,555) (TFRAC(IV,JV),IV=1,10)
  685 CONTINUE
      READ(1,555) AGEMIN
      READ(1,555) C2,C3,C4,C5,C6,C9,C10,C11
      READ(1,555) TCULL
C
C     PRINTING CONTROL VARIABLES THAT HAVE BEEN READ IN
C
      PRINT555,T
      PRINT690,C2,C3,C4,C5,C6,C9,C10,C11
  690 FORMAT(//5X,*C2=*F10.2,10X,*C3=*,F10.2,10X,*C4=*,F10.2/
     15X,*C5=*,F10.2,10X,*C6=*,F10.2,10X,*C9=*,F10.2/
     25X,*C10=*,F9.2,10X,*C11=*,F9.2)
      PRINT692,AGEMIN
  692 FORMAT(//5X,*AGEMIN=*F12.3)
      PRINT693
  693 FORMAT(//5X,*TFRAC(I,L), I IS DOWN, L IS ACROSS*/)
      PRINT555,(TFRAC(L9,1),L9=1,10)
      PRINT555,(TFRAC(L9,2),L9=1,10)
      PRINT697,TCULL
  697 FORMAT(//5X,*TCULL=*F12.3)
C
C**** TRANSFER OF CALVES AND RECORDING DATA FOR WEANED CALVES
C
      DO 700 IM=1,9
      JMUP = KK(IM)
      DO 700 JM=1,JMUP
      CPOP(IM,JM) = SUBPOP(IM,JM)
  700 CONTINUE
      NWEAN = 0
      AGE = 0.0
      IAUP = KK(8)
      DO 702 IA=1,IAUP
      AGE = AGE + DT
      IF((AGE.GE.AGEMIN).AND.(SUBPOP(8,IA).GT.0.0))NWEAN = NWEAN + 1
      IF(NWEAN.EQ.1) IAMIN = IA
  702 CONTINUE
C
      IDFOLD = KK(2) - KNOWS(2)
      IF(NWEAN.GT.IDFOLD) GO TO 715
      IBLOW = IDFOLD + 1 - NWEAN
      IBUP = IBLOW + NWEAN - 1
      DO 710 IB=IBLOW,IBUP
      IC = IB + 1 - IBLOW
      SUBPOP(2,IB) = TFRAC(IC,1)*SUBPOP(8,IAMIN - 1 + IC)
      W(2,IB) = W(8,IAMIN - 1 + IC)
  710 CONTINUE
      KNOWS(2) = KNOWS(2) + NWEAN
      DO 713 IG=IBLOW,IBUP
      IF = IG + 1 - IBLOW
      SUBPOP(3,IG) = TFRAC(IF,2)*SUBPOP(8,IAMIN - 1 + IF)
      W(3,IG) = W(8,IAMIN - 1 + IF)
  713 CONTINUE
      KNOWS(3) = KNOWS(3) + NWEAN
      GO TO 726
  715 CONTINUE
      DO 720 ID=1,NWEAN
      SUBPOP(2,ID) = TFRAC(ID,1)*SUBPOP(8,IAMIN - 1 + ID)
      W(2,ID) = W(8,IAMIN - 1 + ID)
```

```
  720 CONTINUE                                                          RESPNS    245
      KNOWS(2) = KK(2)                                                  RESPNS    246
      DO 725 IE=1,NWEAN                                                 RESPNS    247
      SUBPOP(3,IE) = TFRAC(IE,2)*SUBPOP(8,IAMIN - 1 + IE)               RESPNS    248
      W(3,IE) = W(8,IAMIN - 1 + IE)                                     RESPNS    249
  725 CONTINUE                                                          RESPNS    250
      KNOWS(3) = KK(3)                                                  RESPNS    251
  726 DELAY(2) = FLOAT(KNOWS(2))*DT                                     RESPNS    252
      DELAY(3) = FLOAT(KNOWS(3))*DT                                     RESPNS    253
C                                                                       RESPNS    254
C     RECORDING WEANING WEIGHTS AND BIRTH DATES FOR HEIFERS             RESPNS    255
C                                                                       RESPNS    256
C-----RECORDING THIS WEANING TIME FOR USE IN AWPUB                      RESPNS    257
      THOLD = T                                                         RESPNS    258
      DO 727 IZERO = 1,1                                                RESPNS    259
      TBRTH(1,IZERO) = TBRTH(2,IZERO) = 0.0                             RESPNS    260
      WEANWT(1,IZERO) = WEANWT(2,IZERO) = 0.0                           RESPNS    261
  727 CONTINUE                                                          RESPNS    262
      DO 729 IOVER=1,2                                                  RESPNS    263
      IAB = 1                                                           RESPNS    264
      DO 728 IAA=IBLOW,IBUP                                             RESPNS    265
      IF(SUBPOP(IOVER+1,IAA).EQ.0.0) GO TO 728                          RESPNS    266
      WEANWT(IOVER,IAB) = W(IOVER+1,IAA)                                RESPNS    267
      TBRTH(IOVER,IAB) = T - AGEMIN - (IAA+1-IBLOW)*DT                  RESPNS    268
      IAB = IAB + 1                                                     RESPNS    269
  728 CONTINUE                                                          RESPNS    270
  729 CONTINUE                                                          RESPNS    271
C                                                                       RESPNS    272
C     REMAINING ANIMALS REMOVED THROUGH  THE OUTPUT RATE                RESPNS    273
C                                                                       RESPNS    274
      AVGWTF = 0.0                                                      RESPNS    275
      SALESF = 0.0                                                      RESPNS    276
      DO 730 IH=IAMIN,IAUP                                              RESPNS    277
      II = IH + 1 - IAMIN                                               RESPNS    278
      REMAIN = 1.0 - TFRAC(II,1) - TFRAC(II,2)                          RESPNS    279
      SALESF = SALESF + SUBPOP(8,IH)*REMAIN                             RESPNS    280
      AVGWTF = AVGWTF + W(8,IH)*SUBPOP(8,IH)*REMAIN                     RESPNS    281
      SUBPOP(8,IH) = 0.0                                                RESPNS    282
      W(8,IH) = 0.0                                                     RESPNS    283
  730 CONTINUE                                                          RESPNS    284
      ROUT(8) = SALESF/DT                                               RESPNS    285
      W(8,KK(8)) = 0.0                                                  RESPNS    286
      IF(SALESF.NE.0.0) W(8,KK(8)) = AVGWTF/SALESF                      RESPNS    287
      SALESM = 0.0                                                      RESPNS    288
      AVGWTM = 0.0                                                      RESPNS    289
      DO 732 IJ=IAMIN,IAUP                                              RESPNS    290
      SALESM = SALESM + SUBPOP(7,IJ)                                    RESPNS    291
      AVGWTM = AVGWTM + W(7,IJ)*SUBPOP(7,IJ)                            RESPNS    292
      SUBPOP(7,IJ) = 0.0                                                RESPNS    293
      W(7,IJ) = 0.0                                                     RESPNS    294
  732 CONTINUE                                                          RESPNS    295
      ROUT(7) = SALESM/DT                                               RESPNS    296
      W(7,KK(7)) = 0.0                                                  RESPNS    297
      IF(SALESM.NE.0.0) W(7,KK(7)) = AVGWTM/SALESM                      RESPNS    298
C                                                                       RESPNS    299
C     ADJUSTING INTERMEDIATE RATES AND POPULATIONS FOR WEANINGS         RESPNS    300
C                                                                       RESPNS    301
      DO 736 IK=2,3                                                     RESPNS    302
      JDIFF = KK(IK) - KNOWS(IK)                                        RESPNS    303
      JKUP = KNOWS(IK)                                                  RESPNS    304
      DO 734 JK=1,JKUP                                                  RESPNS    305
      RIN(IK,JKUP + 1 - JK) = SUBPOP(IK,JDIFF + JK)/DT                  RESPNS    306
  734 CONTINUE                                                          RESPNS    307
  736 CONTINUE                                                          RESPNS    308
      DO 740 IL=7,8                                                     RESPNS    309
      JLUP = KK(IL)                                                     RESPNS    310
      DO 738 JL=1,JLUP                                                  RESPNS    311
      RIN(IL,JLUP + 1 - JL) = SUBPOP(IL,JL)/DT                          RESPNS    312
  738 CONTINUE                                                          RESPNS    313
  740 CONTINUE                                                          RESPNS    314
      DO 750 IHJ=2,3                                                    RESPNS    315
      POP(IHJ) = 0.0                                                    RESPNS    316
      JHJUP = KK(IHJ)                                                   RESPNS    317
      DO 745 JHJ=1,JHJUP                                                RESPNS    318
      POP(IHJ) = POP(IHJ) + SUBPOP(IHJ,JHJ)                             RESPNS    319
  745 CONTINUE                                                          RESPNS    320
  750 CONTINUE                                                          RESPNS    321
      DO 760 ILK=7,8                                                    RESPNS    322
      POP(ILK) = 0.0                                                    RESPNS    323
      JLKUP = KK(ILK)                                                   RESPNS    324
      DO 755 JLK=1,JLKUP                                                RESPNS    325
```

```
      POP(ILK) = POP(ILK) + SUBPOP(ILK,JLK)                                 RESPNS    326
  755 CONTINUE                                                              RESPNS    327
  760 CONTINUE                                                              RESPNS    328
C                                                                           RESPNS    329
C     ADJUSTING SLAUGHTER COHORT WEIGHTS IF CALVES TRANSFERRED THERE        RESPNS    330
C                                                                           RESPNS    331
      IF(C2.GT.0.0) W(6,1) = W(7,KK(7))                                     RESPNS    332
      IF(C3.GT.0.0) W(9,1) = W(8,KK(8))                                     RESPNS    333
      IF((1.0-C2-C4).GT.0.0) W(6,1) = W(7,KK(7))                            RESPNS    334
C                                                                           RESPNS    335
C     WEANING COSTS DETERMINED                                              RESPNS    336
C                                                                           RESPNS    337
      TOTWEN = 0.0                                                          RESPNS    338
      DO 742 ILA=7,8                                                        RESPNS    339
      JLAUP = KK(ILA)                                                       RESPNS    340
      DO 741 JLA=1,MIN,JLAUP                                                RESPNS    341
      TOTWEN = TOTWEN + POP(ILA,JLA)                                        RESPNS    342
  741 CONTINUE                                                              RESPNS    343
  742 CONTINUE                                                              RESPNS    344
C-----THE LABOR RESOURCES USED IN WEANING DETERMINED                        RESPNS    345
      RESORC(1) = RESORC(1) + TOTWEN*HRWEAN                                 RESPNS    346
C-----------------------------------------------------------------------    RESPNS    347
C     COW CULLING DECISION POINT                                            RESPNS    348
C-----------------------------------------------------------------------    RESPNS    349
  800 IF((YEAR.LE.TCULL-DIFF).OR.(YEAR.GT.TCULL+DIFF)) GO TO 900            RESPNS    350
      CALL GENERT(T,CT,NSTOCK,1)                                            RESPNS    351
      READ(1,505) (CULFRC(JM),JM=1,10)                                      RESPNS    352
      READ(1,505) (ADORT(IW),IW=1,9)                                        RESPNS    353
      READ(1,505) (PARATE(IW8),IW8=1,9)                                     RESPNS    354
      READ(1,505) C2,C3,C4,C5,C6,C9,C10,C11                                 RESPNS    355
C                                                                           RESPNS    356
C     PRINTING CONTROL VARIABLES THAT HAVE BEEN READ IN                     RESPNS    357
C                                                                           RESPNS    358
      PRINT550,T                                                            RESPNS    359
      PRINT690,C2,C3,C4,C5,C6,C9,C10,C11                                    RESPNS    360
      PRINT8.2,(ADORT(IXI),IXI=1,9)                                         RESPNS    361
  802 FORMAT(//5X,*ADORT(I), I IS ACROSS*//10F10.2)                         RESPNS    362
      PRINT8.5,(CULFRC(JMC),JMC=1,10)                                       RESPNS    363
  805 FORMAT(//5X,*CULFRC(J), J IS ACROSS*//10F10.2)                        RESPNS    364
C                                                                           RESPNS    365
C     THE BREEDING HERD CULLED                                              RESPNS    366
C                                                                           RESPNS    367
      A = FLOAT(KK(1))/DELAY(1)                                             RESPNS    368
      JDEUP = KK(1)                                                         RESPNS    369
      CULLS = 0.0                                                           RESPNS    370
      DO 820 JDE=1,JDEUP                                                    RESPNS    371
      REMOVE = SUBPOP(1,JDE)*CULFRC(JDE)                                    RESPNS    372
      SUBPOP(1,JDE) = SUBPOP(1,JDE) - REMOVE                                RESPNS    373
      RIN(1,JDEUP + 1 -JDE) = A*SUBPOP(1,JDE)                               RESPNS    374
      CULLS = CULLS + REMOVE                                                RESPNS    375
  820 CONTINUE                                                              RESPNS    376
      TSALE = ROUT(1)*DT + CULLS                                            RESPNS    377
      ROUT(1) = TSALE/DT                                                    RESPNS    378
      C8 = CULLS/POP(1)                                                     RESPNS    379
C-----THE LABOR RESOURCES USED IN CULLING DETERMINED                        RESPNS    380
      RESORC(1) = RESORC(1) + CULLS*HRCULL                                  RESPNS    381
      POP(1) = 0.0                                                          RESPNS    382
      JYUP = KK(1)                                                          RESPNS    383
      DO 825 JY=1,JYUP                                                      RESPNS    384
      POP(1) = POP(1) + SUBPOP(1,JY)                                        RESPNS    385
  825 CONTINUE                                                              RESPNS    386
C-----------------------------------------------------------------------    RESPNS    387
C     SPECIAL DECISION POINT                                                RESPNS    388
C-----------------------------------------------------------------------    RESPNS    389
  900 IF(IFLAG.NE.2) GO TO 930                                              RESPNS    390
      CALL GENERT(T,CT,NSTOCK,1)                                            RESPNS    391
      DO 910 NZ=1,NLANDS                                                    RESPNS    392
      READ(1,505) (POSTRB(NZ,IZ),IZ=1,9)                                    RESPNS    393
  910 CONTINUE                                                              RESPNS    394
      JBCUP = KK(1)                                                         RESPNS    395
      READ(1,505) (CULFRC(JBC),JBC=1,JBCUP)                                 RESPNS    396
      READ(1,505) (ADORT(IDM),IDM=1,9)                                      RESPNS    397
      READ(1,505) (PARATE(IDMB),IDMB=1,9)                                   RESPNS    398
      READ(1,505) C2,C3,C4,C5,C6,C9,C10,C11                                 RESPNS    399
      READ(1,505) TWEAN,TCULL,TBRD(1),TBRD(2)                               RESPNS    400
      READ(1,505) (FPLANS(LU),LU=1,4)                                       RESPNS    401
      DO 920 LT=1,4                                                         RESPNS    402
      READ(1,505) (CATTIN(ITA,1,LT),ITA=1,9)                                RESPNS    403
      READ(1,505) (CATTIN(ITB,2,LT),ITB=1,9)                                RESPNS    404
      DO 915 NT=1,NSTOCK                                                    RESPNS    405
      READ(1,505) (DISTFD(ITC,NT,LT),ITC=1,9)                               RESPNS    406
```

```
  915 CONTINUE                                                          RESPNS    407
  920 CONTINUE                                                          RESPNS    408
      READ(1,505) (CSALES(NOT),NOT=1,NSTOCK)                            RESPNS    409
      READ(1,505) (STKPUR(NHU),NHU=1,NSTOCK)                            RESPNS    410
      READ(1,505) (REACTD(NPR),NPR=1,NSTOCK)                            RESPNS    411
      READ(1,505) SLOAN,SDEBTR,SREPAY                                   RESPNS    412
      READ(1,505) (TMHR(L),L=1,4)                                       RESPNS    413
      READ(1,505) CFINAL,REMOVL                                         RESPNS    414
C                                                                       RESPNS    415
C     PRINTING CONTROL VARIABLES THAT HAVE BEEN READ IN                 RESPNS    416
C                                                                       RESPNS    417
      PRINT555,T                                                        RESPNS    418
      PRINT551                                                          RESPNS    419
      DO 930 NLA=1,NLANDS                                               RESPNS    420
      PRINT555,(PDSTPB(NLA,ILA),ILA=1,9)                                RESPNS    421
  930 CONTINUE                                                          RESPNS    422
      PRINT615,(COLFED(JMC),JMC=1,10)                                   RESPNS    423
      PRINT612,(ADDRT(IXI),IXI=1,9)                                     RESPNS    424
      PRINT694,C2,C3,C4,C5,C6,C9,C10,C11                                RESPNS    425
      PRINT676,TBRD(1),TBRD(2),TMEAN,TCOLL                              RESPNS    426
      PRINT622                                                          RESPNS    427
      DO 940 IPLN=1,4                                                   RESPNS    428
      PRINT624,IPLN,FPLANS(IPLN)                                        RESPNS    429
      PRINT625                                                          RESPNS    430
      DO 935 LPLN=1,9                                                   RESPNS    431
      PRINT626,LPLN,CATTIN(LPLN,2,IPLN),CATTIN(LPLN,1,IPLN)             RESPNS    432
  935 CONTINUE                                                          RESPNS    433
  940 CONTINUE                                                          RESPNS    434
      PRINT551                                                          RESPNS    435
      PRINT505,(CSALES(NC),NC=1,NSTOCK)                                 RESPNS    436
      PRINT942,(STKPUR(NCP),NCP=1,NSTOCK)                               RESPNS    437
  942 FORMAT(//5X,*STKPUR(N), N IS ACROSS*//10F10.1)                    RESPNS    438
      PRINT555,CFINAL,REMOVL                                            RESPNS    439
      PRINT668                                                          RESPNS    440
      PRINT555,(TMHR(LAZ),LAZ=1,5)                                      RESPNS    441
      PRINT950,SLOAN,SDEBTR,SREPAY                                      RESPNS    442
  950 FORMAT(//5X,*SLOAN=*F10.2/5X,*SDEBTR=*F10.2/5X,*SREPAY=*F10.2)    RESPNS    443
C                                                                       RESPNS    444
  990 PRINT991                                                          RESPNS    445
  991 FORMAT(*1*)                                                       RESPNS    446
      RETURN                                                            RESPNS    447
      END                                                               RESPNS    448
```

```
      SUBROUTINE REVENU
C
C     VERSION AS OF OCTOBER 2, 1975
C
C     THIS SUBROUTINE CALCULATES REVENUE RECEIVED FROM SALES OF CROPS
C     AND ANIMALS DURING THIS TIME INTERVAL.
C
C-----THE FOLLOWING VARIABLES ARE USED....
C
C        ADDRT(I) = ANNUAL RATE OF ADDITION OF ANIMALS TO COHORT I
C        APRICE(IG) = CURRENT PRICE FOR ANIMALS OF GRADE IG, IN $/KG
C        AREV(I) = REVENUE FROM ANIMALS SALES FROM COHORT I THIS PERIOD
C        ASALES(I) = TOTAL NUMBER OF ANIMALS SOLD FROM COHORT I
C        ASOLD(I) = TOTAL ANIMALS SOLD FROM COHORT I THIS YEAR
C        CPRICE(N) = CURRENT PRICE FOR CROP N, IN $/KG
C        CREV(N) = REVENUE FROM SALES OF CROP N THIS TIME INCREMENT
C        CSALES(N) = AMOUNT OF CROP N SOLD THIS TIME INCREMENT
C        CSOLD(N) = TOTAL AMOUNT OF CROP N SOLD THIS YEAR
C        GRADE(I,J) = SLAUGHTER GRADE OF ANIMALS OF SUBPOP(I,J)
C        POP(I) = POPULATION OF ANIMALS IN COHORT I
C        SUBPOP(I,J) = NUMBER OF ANIMALS IN THE JTH SUBPOPULATION OF I
C        STKPUR(N) = QUANTITY OF FEED STOCK N PURCHASED THIS PERIOD
C        W(I,J) = AVERAGE WEIGHT OF ANIMALS IN SUBPOP(I,J)
C
C-----END OF VARIABLE LIST
C
      COMMON/SYSVAR/T,DT,KK(9),KNOWS(9),SUBPOP(9,40),POP(9),ROUT(9),
     1              DELAY(9),DELAYP(9)
      COMMON/HRDVAL/W(9,40),GRADE(9,40),WGTMAX(9),RIN(9,40),FATFAC,
     1              FMATUR(11),DGAIN(9,40),PAWATE(9),TWOLD,TYRLNG
      COMMON/CNTROL/POSTRH(9,9),CNCAL(9),FEECAL(9),RHGAL(9),CULFRC(10),
     1              TDNR(9),TDNC(9),TDMIR(9),TDMIC(9),AHP(5),MHR(5),
     2              OLDMHR(5),RHGFRC(9,20),CNCFRC(9,20),ACFEED(9,2),
     3              SPLIT,DURB(3),TBRD(3),TFRAC(11,2),ASELL(9),ADDRT(9),
     4              C1,C2,C3,C4,C5,C6,C8,C9,C10,C11,TWEAN,TCULL
      COMMON/FIELD/NSTOCK,FSTOCK(20),STKFED(20),STKPUR(20),PRQUAL(20),
     1              SPOIL(20),STKLOS(20),FQUAL(20),FRCLOS(20),CPURCH(20),
     2              CROP(20,2),CROPG(20),CFEED(20,2),CROPQL(20,2)
      COMMON/PRICES/APRICE(9),BPRICE(9),CPRICE(20)
      COMMON/MONEY/ASALES(10),CSALES(20),AREV(10),CREV(20),CASH(26),
     1              TAGRP(15),TANP(15),TAXES(15),TAGRPD(15),TANPD(15),
     2              TAXED(15),NACOST,NCOST,CAPTL(6),TACASH(15),
     3              LVALUE,LIFE,ANREV(15),AREVD(15),ANCOST(15),
     4              ACOST(21),ACOSTD(15),CCOST(21),TACSHD(15),
     5              ASOLD(10),CSOLD(20),SALES,DEBTJ
      COMMON/SAVER2/TAXINC,TAXLIB,TSPACE(20),NSTRT1,NSTRT2,NSTRT3,NSTRT4
     1              ,DENOM,TAGWGT,TAFEED,WCAPT,NSTRT5,NSTRT6
      DIMENSION ASA(9),AVGW(9),TRANS(9)
      DIMENSION CON(9)
      DIMENSION AVGGRD(9)
      INTEGER GRADE,AVGGRD
      NCROPS = NSTOCK
C
C***  COMPUTING REVENUE GENERATED DURING THE TIME INTERVAL
C     PART 1....ANIMAL SALES REVENUE
C
      CON(1) = 1.0
      CON(2) = 1.0 - C10
      CON(3) = C11
      CON(4) = 1.0
      CON(5) = C6
      CON(6) = 1.0
      CON(7) = C4
      CON(8) = C9
      CON(9) = 1.0
      YEAR = T - INT(T + 0.011)
      IF(ABS(YEAR-DT).GT.DT/2.) GO TO 109
      DO 105 I=1,10
      ASOLD(I) = 0.0
  105 CONTINUE
      DO 107 J=1,NCROPS
      CSOLD(J) = 0.0
  107 CONTINUE
      TAGWGT = 0.0
      TAFEED = 0.0
  109 CONTINUE
      ASALES(10) = 0.0
      DO 110 I=1,9
      ASA(I) = DT*CON(I)*ROUT(I)
      TRANS(I) = 0.0
      IF(ADDRT(I).LT.0.0) TRANS(I) = ABS(ADDRT(I)*DT)
```

```
      ASALES(I) = INT(ASA(I) + TRANS(I) + 0.5)                          REVENU     83
      ASOLD(I) = ASOLD(I) + ASALES(I)                                   REVENU     84
      ASALES(10) = ASALES(10) + ASALES(I)                               REVENU     85
  110 CONTINUE                                                          REVENU     86
      ASOLD(10) = ASOLD(10) + ASALES(10)                                REVENU     87
      DO 125 I=1,9                                                      REVENU     88
      KINT = KK(I)                                                      REVENU     89
      IF(TRANS(I).EQ.0.0) GO TO 120                                     REVENU     90
      ALWT = 0.0                                                        REVENU     91
      ALGD = 0.0                                                        REVENU     92
      DO 115 J=1,KINT                                                   REVENU     93
      FRC = SUBPOP(I,J)/POP(I)                                          REVENU     94
      ALWT = ALWT + W(I,J)*FRC                                          REVENU     95
      ALGD = ALGD + FLOAT(GRADE(I,J))*FRC                               REVENU     96
  115 CONTINUE                                                          REVENU     97
      AVGW(I) = (ASA(I)*W(I,KINT)+TRANS(I)*ALWT)/(ASA(I) + TRANS(I))    REVENU     98
      AVGGRD(I) = ((ASA(I)*FLOAT(GRADE(I,KINT))                         REVENU     99
     1     + TRANS(I)*ALGD)/(ASA(I) + TRANS(I)))+ 0.5                   REVENU    100
      GO TO 125                                                         REVENU    101
  120 AVGW(I) = W(I,KINT)                                               REVENU    102
      AVGGRD(I) = GRADE(I,KINT)                                         REVENU    103
  125 CONTINUE                                                          REVENU    104
      AREV(10) = 0.0                                                    REVENU    105
      DO 140 I=1,9                                                      REVENU    106
      TAGWGT = TAGWGT + ASALES(I)*AVGW(I)                               REVENU    107
      AREV(I) = ASALES(I)*AVGW(I)*APRICE(AVGGRD(I))                     REVENU    108
      AREV(10) = AREV(10) + AREV(I)                                     REVENU    109
  140 CONTINUE                                                          REVENU    110
      DO 145 N=1,NSTOCK                                                 REVENU    111
      TAFEED = TAFEED + STKFED(N)                                       REVENU    112
  145 CONTINUE                                                          REVENU    113
C                                                                       REVENU    114
C     PART 2....CROP SALES REVENUE                                      REVENU    115
C                                                                       REVENU    116
      NHIGH = 21                                                        REVENU    117
      CREV(NHIGH) = 0.0                                                 REVENU    118
      DO 150 J=1,NCROPS                                                 REVENU    119
      CSOLD(J) = CSOLD(J) + CSALES(J)                                   REVENU    120
      CREV(J) = CPRICE(J)*CSALES(J)                                     REVENU    121
      CREV(NHIGH) = CREV(NHIGH) + CREV(J)                               REVENU    122
  150 CONTINUE                                                          REVENU    123
C                                                                       REVENU    124
      RETURN                                                            REVENU    125
      END                                                               REVENU    126
```

```
      FUNCTION TABEX(VAL,ARG,DUMMY,K)                                   TABEX      2
C                                                                       TABEX      3
C     THIS FUNCTION EXTRAPOLATES LINEARLY BEYOND THE ENDPOINTS, AND DOES TABEX      4
C     NOT REQUIRE EQUAL ARGUMENT SPACING.                               TABEX      5
C                                                                       TABEX      6
      DIMENSION VAL(1),ARG(1)                                           TABEX      7
      DO 10 J=2,K                                                       TABEX      8
      IF(DUMMY.GT.ARG(J)) GO TO 10                                      TABEX      9
   20 TABEX = (DUMMY-ARG(J-1))*(VAL(J)-VAL(J-1))/                       TABEX     10
     1(ARG(J) - ARG(J-1)) + VAL(J-1)                                    TABEX     11
      RETURN                                                            TABEX     12
   10 CONTINUE                                                          TABEX     13
      J= K                                                              TABEX     14
      GO TO 20                                                          TABEX     15
      END                                                               TABEX     16
```

```
      FUNCTION TABEXE(VAL,SMALL,DIFF,K,DUMMY)                           TABEXE     2
C                                                                       TABEXE     3
C     THIS FUNCTION PERFORMS LINEAR INTERPOLATION AND EXTRAPOLATION     TABEXE     4
C     OF THE VALUES REPRESENTED IN THE ARRAY VAL.    VALUES ARE EQUALLY TABEXE     5
C     SPACED USING THE DIFFERENCE OF DIFF,THE SMALLEST VALUE IS SMALL.  TABEXE     6
C                                                                       TABEXE     7
      DIMENSION VAL(1)                                                  TABEXE     8
      DUM = DUMMY - SMALL                                               TABEXE     9
      I = MIN0(MAX1(1.0 + DUM/DIFF, 1.0),K)                             TABEXE    10
      TABEXE = (VAL(I+1)-VAL(I))*(DUM-FLOAT(I-1)*DIFF)/DIFF + VAL(I)    TABEXE    11
      RETURN                                                            TABEXE    12
      END                                                               TABEXE    13
```

```
      FUNCTION TABLI(VAL,ARG,DUMMY,K)                                   TABLI      2
C                                                                       TABLI      3
C     THIS FUNCTION PERFORMS TABLE LOOK-UPS BY USING LINEAR INTERPOLATION TABLI  4
C     BETWEEN DATA POINTS, DATA POINTS NEED NOT BE EQUALLY SPACED,      TABLI      5
C     K IS THE NUMBER OF DATA POINTS.                                   TABLI      6
C                                                                       TABLI      7
      DIMENSION VAL(1),ARG(1)                                           TABLI      8
      DUM = AMAX1(AMIN1(DUMMY,ARG(K)),ARG(1))                           TABLI      9
      DO 1 I=2,K                                                        TABLI     10
      IF(DUM.GT.ARG(I)) GO TO 1                                         TABLI     11
      TABLI = (DUM-ARG(I-1))*(VAL(I)-VAL(I-1))/                         TABLI     12
     1(ARG(I)-ARG(I-1))+VAL(I-1)                                        TABLI     13
      RETURN                                                            TABLI     14
    1 CONTINUE                                                          TABLI     15
      RETURN                                                            TABLI     16
      END                                                               TABLI     17
```

```
      FUNCTION TABLIE(VAL,SMALL,DIFF,K,DUMMY)                           TABLIE     2
C                                                                       TABLIE     3
C     THIS FUNCTION INTERPOLATES LINEARLY WITHOUT EXTRAPOLATION         TABLIE     4
C                                                                       TABLIE     5
      DIMENSION VAL(1)                                                  TABLIE     6
      DUM = AMIN1(AMAX1(DUMMY-SMALL,.0),FLOAT(K)*DIFF)                  TABLIE     7
      I = 1.0 + DUM/DIFF                                                TABLIE     8
      IF(I.EQ.K+1)  I=K                                                 TABLIE     9
      TABLIE = ((VAL(I+1)-VAL(I))*(DUM-FLOAT(I-1)*DIFF)/DIFF) + VAL(I)  TABLIE    10
      RETURN                                                            TABLIE    11
      END                                                               TABLIE    12
```

All of the above functions are taken from Llewellyn[4]

```
      SUBROUTINE TAXSUB(A,B,C)                                          TAXSUB     2
C                                                                       TAXSUB     3
C        VERSION AS OF 12/8/75                                          TAXSUB     4
C                                                                       TAXSUB     5
C     PROPERTY TAXES ARE COMPUTED ON A SEMI-ANNUAL BASIS WITH DATES OF  TAXSUB     6
C     PAYMENT BEING JAN 1 AND JULY 1, WITH THE RATE PER HECTARE(PROTAX) TAXSUB     7
C     SPECIFIED EXOGENOUSLY.                                            TAXSUB     8
C                                                                       TAXSUB     9
C     THIS SUBROUTINE COMPUTES THE INCOME TAX THAT IS LIABLE ON INCOME  TAXSUB    10
C     EARNED IN THE PRECEEDING YEAR.                                    TAXSUB    11
C                                                                       TAXSUB    12
C-----THE FOLLOWING VARIABLES ARE COMPUTED....                          TAXSUB    13
C                                                                       TAXSUB    14
C        A = GROSS PROFIT TAKEN IN THIS PERIOD                          TAXSUB    15
C        B = TAX COMPUTED IN THIS SUBROUTINE ON AN ANNUAL PAYMENT BASIS TAXSUB    16
C        C = DEPRECIATION TAKEN IN THIS TAX YEAR                        TAXSUB    17
C        RATE(I,1) = TAXABLE INCOME THRESHOLD I                         TAXSUB    18
C        RATE(I,2) = RATE OF TAXATION OF INCOME ABOVE THRESHOLD I       TAXSUB    19
C                                                                       TAXSUB    20
C-----END OF VARIABLE LIST                                              TAXSUB    21
C                                                                       TAXSUB    22
      COMMON/SYSVAR/T,DT,KK(3),KNOWS(9),SUBPOP(9,40),POP(9),ROUT(9),    TAXSUB    23
     1              DELAY(9),DELAYP(9)                                  TAXSUB    24
      COMMON/SAVER2/TAXINC,TAXLIB,TSPACE(2.),NSTRT1,NSTRT2,NSTRT3,NSTRT4 TAXSUB   25
     1              ,DENOM,TAGWGT,TAFEED,WCAPT,NSTRT5,NSTRT6            TAXSUB    26
      COMMON/EARTH/DIGEST(5),GRN(5),LAND(5),NLANDS,SNZERO,SMZERO,       TAXSUB    27
     1             STOCKL(5),ACPROD(5)                                  TAXSUB    28
      COMMON/MATERL/RESORC(1.),NRSORC,OVHEAD,DEFLAT,SPBRED,SPVACC,      TAXSUB    29
     1              HRCALV,HRFED1,HRFED2,HRBRED,HRVACC,HRWEAN,HRCULL,   TAXSUB    30
     2              HRCAST,HRSEED,HRFERT,HRHARV,HREQIP,HRFCAP,HRMAIN,   TAXSUB    31
     3              SPUTL1,SPUTL2,SPUTL3,SPUTL4,SPUTL5,SPSEED,SPFERT,   TAXSUB    32
     4              SPREP1,SPREP2,SPREP3,HLEASE                         TAXSUB    33
      COMMON/SAVER5/SDEBT,SDEBTR,SREPAY,SLOAN,PROTAX,SDEBTU,PRODUC(9)   TAXSUB    34
      REAL LAND                                                         TAXSUB    35
      DATA RATE/0.50/                                                   TAXSUB    36
                                                                        TAXSUB    37
      YEAR = T - INT(T+1.0E-16)                                         TAXSUB    38
      DIFF = DT/2.                                                      TAXSUB    39
      IF(YEAR.GT.DT/2.) GO TO 15                                        TAXSUB    40
      TAXINC = TAXINC + A - C                                           TAXSUB    41
      TAXLIB = TAXINC                                                   TAXSUB    42
      TAXINC = 0.0                                                      TAXSUB    43
      TLAND = 0.0                                                       TAXSUB    44
      DO 5 N=1,NLANDS                                                   TAXSUB    45
      TLAND = TLAND + LAND(N)                                           TAXSUB    46
    5 CONTINUE                                                          TAXSUB    47
      B = PROTAX*0.50*(TLAND - HLEASE)                                  TAXSUB    48
      RETURN                                                            TAXSUB    49
   15 TAXINC = TAXINC + A - C                                           TAXSUB    50
      IF(ABS(YEAR-0.29).LT.DT/2.) GO TO 25                              TAXSUB    51
      B = 0.0                                                           TAXSUB    52
      IF((YEAR.LE.0.50-DIFF).OR.(YEAR.GT.0.50+DIFF)) GO TO 24           TAXSUB    53
      TLAND = 0.0                                                       TAXSUB    54
      DO 22 N=1,NLANDS                                                  TAXSUB    55
      TLAND = TLAND + LAND(N)                                           TAXSUB    56
   22 CONTINUE                                                          TAXSUB    57
      B = PROTAX*0.50*(TLAND - HLEASE)                                  TAXSUB    58
      RETURN                                                            TAXSUB    59
   24 CONTINUE                                                          TAXSUB    60
      RETURN                                                            TAXSUB    61
   25 CONTINUE                                                          TAXSUB    62
      IF(TAXLIB.LE.0.0) GO TO 50                                        TAXSUB    63
      B = TAXLIB*RATE                                                   TAXSUB    64
      RETURN                                                            TAXSUB    65
   50 B = 0.0                                                           TAXSUB    66
      TAXLIB = 0.0                                                      TAXSUB    67
      RETURN                                                            TAXSUB    68
      END                                                               TAXSUB    69
```

```
      SUBROUTINE WEIGHT(CW,CGAINR,CURPOP,CUROUT)
C
C     THIS SUBROUTINE COMPUTES CURRENT WEIGHTS(CW) OF ANIMALS AS A
C     FUNCTION OF THEIR CURRENT DAILY GAIN RATES(CGAINR).  CUROUT IS THE
C     CURRENT OUTPUT RATE FROM EACH COHORT.  CURPOP IS THE CURRENT SUB-
C     POPULATION.
C
C-----THE FOLLOWING VARIABLES ARE USED....
C
C        CGAINR(I,J) = ACTUAL RATE OF GAIN FOR THE JTH SUBPOPULATION OF
C                      THE ITH COHORT
C        CW(I,J) = CURRENT WEIGHT OF THE JTH SUBPOPULATION OF COHORT I
C        CURPOP(I,J) = JTH SUBPOPULATION OF COHORT I
C        CUROUT(I)  = CURRENT OUTPUT RATE OF COHORT I
C        GRADE(I,J) = GROSS GRADE OF THE JTH SUBPOPULATION OF COHORT I
C        FATFAC = THE COEFFICIENT RELATING EXCESS FEED TO GRADE INCREASE
C        WGTMAX(I) = MAXIMUM WEIGHT POSSIBLE FOR COHORT I
C
C-----END OF VARIABLE LIST
      COMMON/SYSVAR/T,DT,KK(9),KNOWS(9),SUBPOP(9,40),POP(9),ROUT(9),
     1              DELAY(9),DELAYP(9)
      COMMON/HRDVAL/W(9,40),PRATE(9,40),WGTMAX(9),RIN(9,40),FATFAC,
     1              FRATOR(10),DGAIN(9,40),PAWATE(9),TWOLD,TYRLNG
      COMMON/CNTROL/POSTWB(9,9),CNGAL(9),FEEDAL(9),RHGAL(9),CULFRC(10),
     1              TDMR(9),TDNC(9),TDMIR(9),TDMIC(9),AHR(5),MHR(5),
     2              CLDMHR(5),RHGFAC(9,20),CNCFRC(9,20),ACFEED(9,2),
     3              SPLIT,DURB(3),TBRD(3),TFRAC(10,2),ASELL(9),ADDRT(9),
     4              C1,C2,C3,C4,C5,C6,C8,C9,C10,C11,TWEAN,TCULL
      DIMENSION ALPHA(9),CW(9,40),CGAINR(9,40),CUROUT(9),CURPOP(9,40)
      DIMENSION GAMMA(9),ADDED(9),BRTHWT(2)
      INTEGER GRADE
      REAL NUMER
      DATA BRTHWT/30.5,29.1/
      DAYS = 365.*DT
C
C     ADJUSTING WEIGHTS FOR ANIMAL PURCHASES
C
      DO 4 IZ=1,9
      IF(ADDRT(IZ).LE.0.0) GO TO 4
      JZUP = KK(IZ)
      PFRAC = 1.0
      IF(ADDRT(IZ)*DT.EQ.POP(IZ))GO TO 2
      PFRAC = ADDRT(IZ)/(POP(IZ) - ADDRT(IZ)*DT)
    2 IF(PFRAC.GT.1.0) PFRAC = 1.0
      IF(PFRAC.LT.0.0) PFRAC = 0.0
      DO 3 JZ=1,JZUP
      IF(SUBPOP(IZ,JZ).LE.0.0) GO TO 3
      W(IZ,JZ) = W(IZ,JZ)*(1.0 - PFRAC) + PFRAC*PAWATE(IZ)
    3 CONTINUE
    4 CONTINUE
C
C     ADJUSTING PREDICTED RATES OF GAIN FOR PHYSIOLOGICAL MAXIMUMS
C
      DO 7 IG=1,9
      JGUP = KK(IG)
      DO 6 JG=1,JGUP
      DIFF = WGTMAX(IG) - CW(IG,JG)
      GAIN = DAYS*CGAINR(IG,JG)
      IF(DIFF.EQ.0.0) GRADE(IG,JG) = GRADE(IG,JG) + GAIN*FATFAC
      IF(DIFF.GE.GAIN) GO TO 6
      IF(GAIN.EQ.0.0) GO TO 6
      CGAINR(IG,JG) = CGAINR(IG,JG)*(DIFF/GAIN)
    6 CONTINUE
    7 CONTINUE
C
C     COEFFICIENTS BASED ON RATE OF MOVEMENT THROUGH THE COHORT
C
      ADD2 = DT*C1*CUROUT(2)
      ADD3 = DT*(1. - C11)*CUROUT(3)
      ADDED(1) = ADD2 + ADD3
      ADDED(2) = DT*C8*CUROUT(3)
      ADDED(3) = DT*(1.-C3-C5-C9)*CUROUT(8)
      ADDED(4) = DT*(1.-C6)*CUROUT(5)
      ADDED(5) = DT*C2*CUROUT(7)
      ADDED(6) = DT*(1.-C2-C4)*CUROUT(7)
      ADDED(7) = CURPOP(7,1)*DT*FLOAT(KK(7))/DELAY(7)
      ADDED(8) = CURPOP(8,1)*DT*FLOAT(KK(8))/DELAY(8)
      ADDED(9) = DT*C9*CUROUT(8)
      DO 10 IA=1,9
      JA = KK(IA)
      IF((IA.EQ.2).OR.(IA.EQ.3)) JA = KNOWS(IA)
```

```
      ALPHA(IA) = DT*FLOAT(JA)/DELAY(IA)                                WEIGHT     83
      LOW = 1                                                           WEIGHT     84
      IF((IA.EQ.2).OR.(IA.EQ.3)) LOW = KK(IA) - KNOWS(IA) + 1           WEIGHT     85
      APROA = CURPOP(IA,LOW)*(1. - ALPHA(IA))                           WEIGHT     86
      APROB = APROA + ADDED(IA)                                         WEIGHT     87
      IF(APROB.NE.0.0) GO TO 9                                          WEIGHT     88
      GAMMA(IA) = 1.0                                                   WEIGHT     89
      GO TO 10                                                          WEIGHT     90
    9 GAMMA(IA) = APROA/APROB                                           WEIGHT     91
      IF((CURPOP(IA,LOW).GT.0.0).AND.(CW(IA,LOW).LE.0.0)) GAMMA(IA) = 0. WEIGHT     92
   10 CONTINUE                                                          WEIGHT     93
C                                                                       WEIGHT     94
C**** CHANGING WEIGHTS TO CONFORM TO AGING AND GAINING PROCESSES        WEIGHT     95
C                                                                       WEIGHT     96
      LO2 = KK(2) - KNOWS(2) + 1                                        WEIGHT     97
      LO3 = KK(3) - KNOWS(3) + 1                                        WEIGHT     98
      DO 50 IB=1,9                                                      WEIGHT     99
      JBUP = KK(IB)                                                     WEIGHT    100
      JBLOW = 2                                                         WEIGHT    101
      IF(IB.EQ.2) JBLOW = LO2 + 1                                       WEIGHT    102
      IF(IB.EQ.3) JBLOW = LO3 + 1                                       WEIGHT    103
      DO 30 JB=JBLOW,JBUP                                               WEIGHT    104
      JS = JBUP - JB + JBLOW                                            WEIGHT    105
      NUMER = CURPOP(IB,JS)*(1.-ALPHA(IB))                              WEIGHT    106
      DENOM = NUMER + CURPOP(IB,JS-1)*ALPHA(IB)                         WEIGHT    107
      IF((IB.EQ.2).OR.(IB.EQ.3)) GO TO 13                               WEIGHT    108
      IF((IB.EQ.7).OR.(IB.EQ.8)) GO TO 13                               WEIGHT    109
C-----DISTRIBUTED DELAY COHORTS                                         WEIGHT    110
      IF(CURPOP(IB,JS).LE.0.0) GO TO 30                                 WEIGHT    111
      IF((CURPOP(IB,JS-1).GT.0.0).AND.(CW(IB,JS).GT.0.0)) GO TO 12      WEIGHT    112
      IF(CURPOP(IB,JS-1).LE.0.0) BETA = 1.                              WEIGHT    113
      IF(CW(IB,JS).LE.0.0) BETA = 0.0                                   WEIGHT    114
      GO TO 20                                                          WEIGHT    115
   12 BETA = NUMER/DENOM                                                WEIGHT    116
      GO TO 20                                                          WEIGHT    117
C-----DISCRETE DELAY COHORTS                                            WEIGHT    118
   13 IF(CURPOP(IB,JS).LE.0.0) GO TO 30                                 WEIGHT    119
      BETA = 0.0                                                        WEIGHT    120
   20 CW(IB,JS) = BETA*(CW(IB,JS) + DAYS*CGAINR(IB,JS))                 WEIGHT    121
     1  + (1.0 - BETA)*(CW(IB,JS-1) + DAYS*CGAINR(IB,JS-1))             WEIGHT    122
   30 CONTINUE                                                          WEIGHT    123
   50 CONTINUE                                                          WEIGHT    124
C                                                                       WEIGHT    125
C     THE YOUNGEST COHORT SUBPOPULATIONS                                WEIGHT    126
C                                                                       WEIGHT    127
      F2 = 0.0                                                          WEIGHT    128
      F3 = 0.0                                                          WEIGHT    129
      IF(ADD2 + ADD3.LE.0.0) GO TO 15                                   WEIGHT    130
      F2 = ADD2/(ADD2 + ADD3)                                           WEIGHT    131
      F3 = ADD3/(ADD2 + ADD3)                                           WEIGHT    132
   15 CONTINUE                                                          WEIGHT    133
      CW(1,1) = GAMMA(1)*(CW(1,1) + DAYS*CGAINR(1,1))                   WEIGHT    134
     1  + (1. - GAMMA(1))*(CW(2,KK(2)) + DAYS*CGAINR(2,KK(2)))*F2       WEIGHT    135
     2  + (1. - GAMMA(1))*(CW(3,KK(3)) + DAYS*CGAINR(3,KK(3)))*F3       WEIGHT    136
      WCALFF =  CW(8,KK(8)) + DAYS*CGAINR(8,KK(8))                      WEIGHT    137
      CW(2,LO2) = GAMMA(2)*(CW(2,LO2) + DAYS*CGAINR(2,LO2))             WEIGHT    138
     1  + (1. - GAMMA(2))*WCALFF                                        WEIGHT    139
      CW(3,LO3) = GAMMA(3)*(CW(3,LO3) + DAYS*CGAINR(3,LO3))             WEIGHT    140
     1  + (1. - GAMMA(3))*WCALFF                                        WEIGHT    141
      CW(4,1) = GAMMA(4)*(CW(4,1) + DAYS*CGAINR(4,1))                   WEIGHT    142
     1  + (1. - GAMMA(4))*(CW(5,KK(5)) + DAYS*CGAINR(5,KK(5)))          WEIGHT    143
      WCALFM = CW(7,KK(7)) + DAYS*CGAINR(7,KK(7))                       WEIGHT    144
      CW(5,1) = GAMMA(5)*(CW(5,1) + DAYS*CGAINR(5,1))                   WEIGHT    145
     1  + (1. - GAMMA(5))*WCALFM                                        WEIGHT    146
      CW(6,1) = GAMMA(6)*(CW(6,1) + DAYS*CGAINR(6,1))                   WEIGHT    147
     1  + (1. - GAMMA(6))*WCALFM                                        WEIGHT    148
      CW(7,1) = GAMMA(7)*(CW(7,1) + DAYS*CGAINR(7,1))                   WEIGHT    149
     1  + (1. - GAMMA(7))*BRTHWT(1)                                     WEIGHT    150
      CW(8,1) = GAMMA(8)*(CW(8,1) + DAYS*CGAINR(8,1))                   WEIGHT    151
     1  + (1. - GAMMA(8))*BRTHWT(2)                                     WEIGHT    152
      CW(9,1) = GAMMA(9)*(CW(9,1) + DAYS*CGAINR(9,1))                   WEIGHT    153
     1  + (1. - GAMMA(9))*WCALFF                                        WEIGHT    154
C                                                                       WEIGHT    155
C     REMOVING FRACTIONAL SUBPOPULATIONS FROM RECORDS                   WEIGHT    156
C                                                                       WEIGHT    157
      DO 70 IC=1,9                                                      WEIGHT    158
      JCUP = KK(IC)                                                     WEIGHT    159
      DO 60 JC=1,JCUP                                                   WEIGHT    160
      IF(SUBPOP(IC,JC).GT.0.10) GO TO 60                                WEIGHT    161
      SUBPOP(IC,JC) = W(IC,JC) = RIN(IC,JCUP+1-JC) = 0.0                WEIGHT    162
   60 CONTINUE                                                          WEIGHT    163
```

```
70 CONTINUE                                                    WEIGHT    164
   RETURN                                                      WEIGHT    165
   END                                                         WEIGHT    166
```

```
      FUNCTION XPECTA(N,TGUESS)                                         XPECTA      2
C                                                                       XPECTA      3
C     THIS FUNCTION SUPPLIES EXPECTED PRICES OF CATTLE UP TO 40 DTS IN  XPECTA      4
C     THE FUTURE AND RECORDS UP TO 10 DTS OF PAST VALUES.  A            XPECTA      5
C     TABLE FUNCTION INTERPOLATES LINEARLY BETWEEN DATA POINTS SPACED   XPECTA      6
C     UNIFORMLY WITH AN INTERVAL OF 2 DTS.                              XPECTA      7
C                                                                       XPECTA      8
      COMMON/SYSVAR/T,DT,KK(9),KNOWS(9),SUBPOP(9,40),POP(9),ROUT(9),    XPECTA      9
     1              DELAY(9),DELAYP(9)                                  XPECTA     10
      COMMON/EXPECT/APFUTR(5,20),APPAST(5,5),CPFUTR(20,10),CPPAST(20,5) XPECTA     11
     1              ,BPFUTR(9,10),BPPAST(9,5)                           XPECTA     12
      DIMENSION DUMMYF(20),DUMMYB(5)                                    XPECTA     13
      TDIFF = TGUESS - T                                                XPECTA     14
      IF(TDIFF.LT.0.0) GO TO 50                                         XPECTA     15
      IF(TDIFF.GT.0.0) GO TO 5                                          XPECTA     16
      XPECTA = APFUTR(N,1)                                              XPECTA     17
      RETURN                                                            XPECTA     18
    5 CONTINUE                                                          XPECTA     19
      DO 10 IP=1,20                                                     XPECTA     20
      DUMMYF(IP) = APFUTR(N,IP)                                         XPECTA     21
   10 CONTINUE                                                          XPECTA     22
      XPECTA = TABLIE(DUMMYF,.0,2.0*DT,19,TDIFF)                        XPECTA     23
      RETURN                                                            XPECTA     24
   50 CONTINUE                                                          XPECTA     25
      DO 60 JP=1,5                                                      XPECTA     26
      DUMMYB(JP) = APPAST(N,5-JP)                                       XPECTA     27
   60 CONTINUE                                                          XPECTA     28
      XPECTA = TABLIE(DUMMYB,0.0,2.0*DT,4,-TDIFF)                       XPECTA     29
      RETURN                                                            XPECTA     30
      END                                                               XPECTA     31
```

```
      FUNCTION XPECTB(N,TGUESS)
C
C     THIS FUNCTION SUPPLIES EXPECTED PRICES OF RESOURCES UP TO 20 DTS
C     INTO THE FUTURE, WHILE RECORDING UP TO 10 DTS OF PAST VALUES.  A
C     TABLE FUNCTION INTERPOLATES LINEARLY BETWEEN DATA POINTS SPACED
C     UNIFORMLY WITH AN INTERVAL OF 2 DTS.
C
      COMMON/SYSVAR/T,DT,KK(9),KNOWS(9),SUBPOP(9,40),POP(9),ROUT(9),
     1              DELAY(9),DELAYP(9)
      COMMON/EXPECT/APPUTR(5,20),APPAST(5,5),CPFUTR(20,10),CPPAST(20,5)
     1              ,BPFUTR(6,10),BPPAST(6,5)
      DIMENSION DUMMYY(10),DUMMYZ(5)
      TDIFF = T - TGUESS
      IF(TDIFF.LT.0.0) GO TO 50
      IF(TDIFF.GT.0.0) GO TO 5
      XPECTB = BPFUTR(N,1)
      RETURN
    5 CONTINUE
      DO 10 IP=1,10
      DUMMYY(IP) = BPFUTR(N,IP)
   10 CONTINUE
      XPECTB = TABLIE(DUMMYY,0.0,2.0*DT,9,TDIFF)
      RETURN
   50 CONTINUE
      DO 60 JP=1,5
      DUMMYZ(JP) = BPPAST(N,6-JP)
   60 CONTINUE
      XPECTB = TABLIE(DUMMYZ,0.0,2.0*DT,4,-TDIFF)
      RETURN
      END
```

```
      FUNCTION XPECTC(N,TGUESS)                                         XPECTC     2
C                                                                       XPECTC     3
C     THIS FUNCTION SUPPLIES EXPECTED PRICES OF CROPS UP TO 20 DTS IN   XPECTC     4
C     THE FUTURE AND RECORDS UP TO 10 DTS OF PAST VALUES.   A           XPECTC     5
C     TABLE FUNCTION INTERPOLATES LINEARLY BETWEEN DATA POINTS SPACED   XPECTC     6
C     UNIFORMLY WITH AN INTERVAL OF 2 DTS.                              XPECTC     7
C                                                                       XPECTC     8
      COMMON/SYSVAR/T,DT,KK(9),KNOWS(9),SUBPOP(9,40),POP(9),ROUT(9),    XPECTC     9
     1             DELAY(9),DELAYP(9)                                   XPECTC    10
      COMMON/EXPECT/APFUTR(5,20),APPAST(5,5),CPFUTR(20,10),CPPAST(20,5) XPECTC    11
     1              ,BPFUTR(5,10),BPPAST(4,5)                           XPECTC    12
      DIMENSION DUMMYW(10),DUMMYL(5)                                    XPECTC    13
      TDIFF = TGUESS - T                                                XPECTC    14
      IF(TDIFF.LT.0.0) GO TO 50                                         XPECTC    15
      IF(TDIFF.GT.0.0) GO TO 5                                          XPECTC    16
      XPECTC = CPFUTR(N,1)                                              XPECTC    17
      RETURN                                                            XPECTC    18
    5 CONTINUE                                                          XPECTC    19
      DO 10 IP=1,10                                                     XPECTC    20
      DUMMYW(IP) = CPFUTR(N,IP)                                         XPECTC    21
   10 CONTINUE                                                          XPECTC    22
      XPECTC = TABLIE(DUMMYW,0.0,2.0*DT,9,TDIFF)                        XPECTC    23
      RETURN                                                            XPECTC    24
   50 CONTINUE                                                          XPECTC    25
      DO 60 JP=1,5                                                      XPECTC    26
      DUMMYL(JP) = CPPAST(N,5-JP)                                       XPECTC    27
   60 CONTINUE                                                          XPECTC    28
      XPECTC = TABLIE(DUMMYL,0.0,2.0*DT,4,-TDIFF)                       XPECTC    29
      RETURN                                                            XPECTC    30
      END                                                               XPECTC    31
```

## REFERENCES


1. Jaske, M. R., System Simulation Modeling of a Beef Cattle Enterprise to Investigate Management Decision Making Strategies, PhD dissertation, Michigan State University, 1976.

2. Parton, W. J., and Marshall, J. K.,"MODENV: A Grassland Ecosystem Model", Proceedings of the 1973 Summer Computer Simulation Conference, Montreal, Canada, pp. 769-776.

3. Schuette, M., A Dynamic Model Simulation of Growth and Female Reproduction of Beef Cattle, MS thesis, Michigan State University, 1976.

4. Llewellyn, R. H. FORDYN: An Industrial Dynamics Simulator, Raleigh, N. C., By the author, 1965.

## CLASS Documents

| Number | Title |
|---|---|
| 1 | "Computer Library for Agricultural Systems Simulation: A Progress Report," Michael H. Abkin and Tom W. Carroll. (July 1976) |
| 2 | "Software Standards Manual." (July 1976) |
| 3 | "Policy Analysis Language, Version 2.3, Programmer's Guide for CDC Cyber Computers," Claudia S. Winer and Chris Wolf. (July 1976) |
| 4 | "Policy Analysis Language, Version 2.3, Reference Manual," Claudia S. Winer anc Chris Wolf. (July 1976). |
| 5 | "Policy Analysis Language, Version 2.3, Guide to Using a PAL Program," Claudia S. Winer and Chris Wolf. (July 1976) |
| 6 | "DEMOGC: Demography with Distributed Age Cohorts," Michael H. Abkin and Chris Wolf. (July 1976) |
| 7 | "DEMOGD: Demography with Discrete Age Cohorts," Michael H. Abkin and Chris Wolf. (July 1976) |
| 8 | "Distributed Delay Routines: DEL, DELS, DELF, DELLF, DELVF, DELLVF," Michael H. Abkin and Chris Wolf. (July 1976) |
| 9 | "Table Functions: TABEL, TABEX, TABUL, TABUX," Michael H. Abkin, Chris Wolf, and Tom W. Carroll. (July 1976) |
| 10 | "AGACC: Accounting Routine for the Agricultural Sector," Dennis Pervis and Chris Wolf. (July 1976) |
| 11 | "User's Guide for the Beef Cattle Enterprise Simulation Model," Michael R. Jaske. (July 1976) |
| 12 | "User's Guide to SYSOPT: An Interactive System Optimization Computer Program," Marcus Buchner. (August 1976) |