AGENCY FOR INTERNATIONAL DEVELOPMENT
WASHINGTON, D. C. 20523

BIBLIOGRAPHIC INPUT SHEET

FOR AID USE ONLY
Batch #61

1. SUBJECT CLASSIFICATION
A. PRIMARY: TEMPORARY
B. SECONDARY:

2. TITLE AND SUBTITLE
Water supply and sanitation in developing countries

3. AUTHOR(S)
(101) N.C. Univ. Int.Program in Sanitary Engineering Design

4. DOCUMENT DATE: 1966-1969
5. NUMBER OF PAGES: 147p
6. ARC NUMBER: ARC

7. REFERENCE ORGANIZATION NAME AND ADDRESS
N.C.

8. SUPPLEMENTARY NOTES *(Sponsoring Organization, Publishers, Availability)*
(Incl.20 numbers of the AID-UNC/IPSED ser.)

9. ABSTRACT
(Health R&D)

10. CONTROL NUMBER
PN-AAD-722

11. PRICE OF DOCUMENT

12. DESCRIPTORS

13. PROJECT NUMBER

14. CONTRACT NUMBER
GSD-1888-GTS (N.C.)

15. TYPE OF DOCUMENT

AID 590-1 (4-74)

CSD-1880 CITS
N.C.
PN-AAT-932

DEPARTMENT OF STATE
AGENCY FOR INTERNATIONAL DEVELOPMENT
WASHINGTON, D.C. 20523

Fellow Environmental Health Workers:

Some years ago, the Agency for International Development (AID) sponsored a series of publications on water supply and sanitation in developing countries. The series was prepared by the University of North Carolina with the objective of encouraging the exchange of information, not only between workers in the more developed nations and their colleagues in the lesser developed countries but also between those workers themselves. It was hoped this exchange would fill the need for a continuing source of new ideas, new techniques and would provide a ready means of sharing ideas and problems. The contract resulted in twenty publications over a period of three years.

AID believes its objective was achieved and that the sustained demand for individual items and the total series confirms their present day utility. For that reason, AID has reprinted the entire series and is pleased to forward a copy in response to your recent request.

We hope it will prove of value to you.

A. Dale Swisher

A. Dale Swisher, P.E.
Environmental Engineer
Office of Health
Technical Assistance Bureau

WATER SUPPLY AND SANITATION IN DEVELOPING COUNTRIES

AGENCY FOR INTERNATIONAL DEVELOPMENT

UNIVERSITY OF NORTH CAROLINA

GERRIT V. R. MARAIS AND FREDERICK E. MCJUNKIN, EDITORS

September 1966

AID-UNC/IPSED Series Item No. 1

SCOPE OF THE PUBLICATION SERIES

An engineer concerned with water supply and sanitation in developing countries soon realizes how difficult it is to receive and pass on to others information on technical matters in his field. Although much money is being spent on water supply and sanitation, and although the developing countries have many common problems; at present, the engineer in the field can find no regular publication describing new developments, designs and operational experiences.

Why does this happen? First, many people believe that the developed nations have all the necessary technology, which needs only to be exported to the developing nations to solve their problems; second, some have the mistaken idea that efficiency goes hand-in-hand with highly developed technology; and third, others mistakenly assume that "crude" solutions have only limited or temporary value, so why bother to publish information about them.

Conditions in developing countries, however, are so different from those in developed countries that solutions which work in developed countries may be of little value in developing ones, where limited financial resources and manufacturing capacity are the rule; skilled labor is scarce, unskilled labor plentiful; the climate is usually tropical; and elementary facilities are the greatest needs. Such factors must be reflected in solutions for developing countries.

Continuous critical study and appraisal of developments elsewhere and their potential adaptation to local use are necessary. These objectives can best be satisfied by reciprocal exchange of information. The existing international communications for this type of information are primarily conferences, symposia, and intermittent publications by international agencies, with once-only publication and little follow-up of developments reported. Conferences and symposia are infrequent and costly. Their durations are short so that the number of papers that can be discussed is limited. They are attended mainly by administrative engineering personnel--design and field engineers rarely see the proceedings and are given little incentive to contribute and participate. World-wide dissemination of the proceedings is unsatisfactory--an engineer in Africa rarely reads what his counterpart in South America thinks about the same problem.

Recognizing the need for better communication, the Department of Environmental Sciences and Engineering, School of Public Health, University of North Carolina at Chapel Hill, through its International Program in Sanitary Engineering Design (IPSED), is beginning a series of publications on water supply and sanitation in developing countries. The series is sponsored by the Agency for International Development (AID) of the United States Department of State. It is concerned particularly with activities

This publication series is prepared by the International Program in Sanitary Engineering Design (IPSED) under the sponsorship of the Community Water Supply Branch, Agency for International Development (AID), United States Department of State. IPSED is a program of the Department of Environmental Sciences and Engineering, School of Public Health, University of North Carolina at Chapel Hill. Correspondence should be addressed to Frederick E. McJunkin, Editor, IPSED, Box 630, Chapel Hill, N.C., 27514, U.S.A. Publications are supplied free of charge to engineers, working in developing countries and may be obtained from U.S. embassies, U.S.A.I.D. missions, or by writing the University. Material for publication is invited.

of design and field engineers--to assist them by collecting and distributing information, designs, and procedures that experience has shown to be successful under conditions prevailing in developing countries. This series should become a useful means of communication between sanitary engineers in developing countries.

To ensure the greatest flexibility and usefulness, the series will be issued in loose leaf form, using lithographic reproduction. Each subject item will be developed from the information received from contributors, or otherwise available at the University, and published as a separate paper. The treatment will not be exhaustive. As further information becomes available, items will be revised.

Items of information will be compiled from personal communications, reports, papers, literature surveys, etc. The principal source, however, should be from the engineers and administrators presently concerned with water supply and sanitation in the developing countries. IPSED recognizes the severe demands on their time, which, even if they should have the inclination, may not allow would-be contributors to make the effort required to write papers. Furthermore, no information should be lost by default because the contributor is afraid that his English is not good enough. Consequently, IPSED will undertake the responsibilities of compiling and editing. Contributors can, therefore, feel free to send their information in any form, be it pencil notes, sketches, or annotated plans, whatever is most convenient. Full recognition will be given to each contributor and thus readers may personally contact contributors if they wish.

Success of this publication depends primarily on participation by the engineers, administrators, and operators in the water supply and sanitation field in developing countries. No idea, development, procedure, or operation should be withheld, even though it may appear insignificant and commonplace to the contributor. What is considered a well-worn method in one region may be revolutionary in another. The University of North Carolina, serving as a clearing-house, is in a favorable position to evaluate each contribution as information worthy of wider distribution.

IPSED is vitally interested in identifying those design problems in water supply and sanitation that are most common in the developing countries and whose solution would be of value. Thus readers faced with design problems which they have been unable to solve satisfactorily are invited to submit these also. If the problem is of sufficiently general interest and a solution is available, both the problem and its solution will be published.

An abbreviated listing of items to be described or discussed in forthcoming issues includes such topics as wells and well drilling, water rates, estimation of water demand, water distribution systems, novel construction materials, sedimentation and coagulation facilities, slow and rapid sand filters, iron-removal processes, storage facilities, pumps, windmills, hydraulic rams, water services, oxidation ponds, sanitation facilities, disinfection apparatus, solar stills and water heaters, etc. The above is a typical, but by no means exhaustive, listing, and contributed material on other topics would be welcomed. The items distributed with this announcement are illustrative of the spirit and intent of the series.

To repeat, the success and value of this publication series will depend largely on two-way communication between its editors and its readers. Critical comment, suggestions, and especially, information and material for publication are invited.

WATER SUPPLY AND SANITATION IN DEVELOPING COUNTRIES

AGENCY FOR INTERNATIONAL DEVELOPMENT

UNIVERSITY OF NORTH CAROLINA

GERRIT V. R. MARAIS AND FREDERICK E. MCJUNKIN, EDITORS

September 1966

AID-UNC/IPSED Series Item No. 2

REDUCTION OF WATER WASTE BY THE USE OF CONSTANT-FLOW VALVES

ABSTRACT

Installation of inexpensive constant-flow valves rated at 2 UK gpm (9.1 lpm) in the supply lines to individual houses in Kitwe, Zambia reduced the water use by 25 to 30 percent. No complaints regarding inadequate supply were received.

(Key words: Water supply, water services, water consumption)

Source of Information

L. J. Vincent, Manager
Zambia Housing Board
Box RW 74
Lusaka, Zambia

Investigation by

G. Keppie
Town Engineer
Kitwe, Zambia

Introduction

Water waste, particularly in high-density housing areas, can result in the following situations:

(1) Average cost of water consumed per household may exceed the budget for unmetered water allowed in house rental calculations.

(2) Inadequate water pressures or even a total lack of water during daily peak demand periods may occur in high-level areas because of heavy drawoff in low-level areas. The situation worsens during the hot season and supply mains may be inadequate to an extent requiring an expensive investment in increased capacity.

This publication series is prepared by the International Program in Sanitary Engineering Design (IPSED) under the sponsorship of the Community Water Supply Branch, Agency for International Development (AID), United States Department of State. IPSED is a program of the Department of Environmental Sciences and Engineering, School of Public Health, University of North Carolina at Chapel Hill. Correspondence should be addressed to Frederick E. McJunkin, Editor, IPSED, Box 630, Chapel Hill, N.C., 27514, U.S.A. Publications are supplied free of charge to engineers working in developing countries and may be obtained from U.S. embassies, U.S.A.I.D. missions, or by writing the University. Material for publication is invited.

The fact that no complaints regarding inadequate water supply were received is significant. Psychologically the constant flow valve has an advantage over other water-conserving devices in that there is no apparent visible curtailment of the supply--the consumer is usually unaware of its existence.

At present virtually no information is available on optimum flow rates. Decisions will have to be made in the light of local experience. For unmetered supplies, the Zambia Housing Board recommends that 2 UK gpm (9.1 lpm) valves be used. Under normal conditions this figure will ensure an adequate supply of water to each household but, at the same time, will reduce waste caused by draw-off at unnecessarily high rates of flow. In many situations this flow rate will be considered excessive. For instance, in Mexico, constant flow valves rated at 50 lph (0.83 lpm, 0.18 UK gpm) have been installed for some rural communities, a rate which is probably near the lower limit of acceptable supply.*

Constant-flow valves have also been used successfully in Brazil.** There the valves are often used even for commercial buildings and small industries with valve diameters ranging in size up to 2 in (5.08 cm). Unfortunately, at present, no further information on Brazilian constant-flow valves is available to the Editors.

The cost of the constant flow valve is approximately US $1.5 to $2.

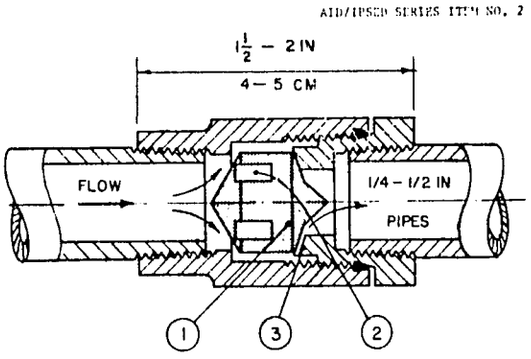

FIGURE 2·1 CONSTANT-FLOW VALVE

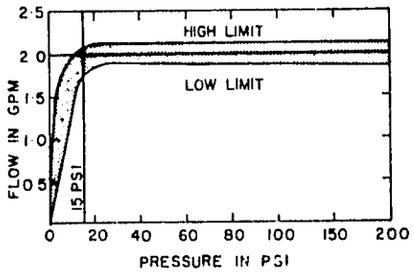

FIGURE 2·2 FLOW CHARACTERISTICS OF A 2-GPM VALVE

*Information received from the President, Medidores Azteca, S.A., Av. Toluca 300, Villa Obregon, Mexico 20, D.F. This company manufactures the Azteca Constant Flow Valve.

**Where they are known as penas de agua.

WATER SUPPLY AND SANITATION IN DEVELOPING COUNTRIES

AGENCY FOR INTERNATIONAL DEVELOPMENT

UNIVERSITY OF NORTH CAROLINA

GERRIT V. R. MARAIS AND FREDERICK E. [illegible]

October 1966

AID-UNC/IPSED Series Item No. 3

WATER SUPPLY USING BAMBOO PIPE

ABSTRACT

Bamboo pipe is extrensively used for small water supply systems in Indonesia. This report briefly describes the salient features of design and construction of elements of the system.

(Key words: Water supply, water pipe lines)

Source of Information: Department of Health
10 Tosari
Djakarta
Indonesia

Introduction

In Indonesia bamboo pipe to convey water to villages is extensively used. Where bamboo is readily available its use as a substitute for metal pipe appears to have considerable merit. It is simple to construct using unskilled labor and local materials.

Design and Construction

Bamboo pipe is made of lengths of bamboo of the desired diameter by boring out the dividing membrane at the joints. A circular chisel for this purpose is shown in Figure 3.1. One end of a short length of steel pipe is belled out to increase the diameter and the edge sharpened. A length of bamboo pipe of sufficiently small diameter to slide into the pipe is used as a boring bar and secured to the pipe by drilling a small hole through the assembly and driving a nail through the hole.* Three or more chisels ranging from smallest to the maximum desired diameter are required. At each joint the membrane is removed by first boring a hole with the smallest diameter chisel, then, progressively enlarging the hole with the larger diameter chisels.

*Such a nail is also known as a cotter pin or linchpin.

This publication series is prepared by the International Program in Sanitary Engineering Design (IPSED) under the sponsorship of the Community Water Supply Branch, Agency for International Development, United States Department of State. IPSED is a program of the Department of Environmental Sciences and Engineering, School of Public Health, University of North Carolina at Chapel Hill. Correspondence should be addressed to Frederick E. McJunkin, Editor, IPSED, Box 630, Chapel Hill, N.C. 27514, U.S.A. Publications are supplied free of charge to engineers working in developing countries and may be obtained from U.S. embassies, U.S.A.I.D. missions, or by writing the University. Material for publication is [illegible]

Bamboo pipe lengths are joined in a number of ways, as shown in Figure 3.2. Joints are made water-tight by caulking with cotton wool mixed with tar, then tightly binding with rope soaked in hot tar.

Bamboo pipe is preserved by laying the pipe below ground level and ensuring a continuous flow in the pipe. Where the pipe is laid above ground level, it is protected by wrapping it with layers of palm fiber with soil between the layers. This treatment will give a life expectancy of about 3 to 4 years to the pipe; some bamboo will last up to 5-6 years. Deterioration and failure usually occur at the natural joints, which are the weakest parts.

Bamboo piping can hold pressure up to two atmospheres ($\pm$ 30 psi* or 2.1 kg/cm^{2}**), hence, it cannot be used as pressure piping. It is most suitable in areas where the source of supply is higher than the area to be served and the flow is under gravity. Where the depth of the pipe below the hydraulic gradient is such that the maximum pressure will be exceeded, pressure relief chambers must be installed. A typical chamber is shown in Figure 3.3. These chambers are also installed as feederboxes for branch supply lines to villages en route.

A diagrammatic sketch of a bamboo pipe water supply system for a number of villages is shown in Figure 3.4. Size requirements for bamboo pipe may be determined using the pipe capacity nomograph provided as Figure 3.5. A design for a public fountain made from bamboo is shown in Figure 3.6.

Health Aspects

After a bamboo pipe is put into operation it gives an undesirable odor to the water. This, however, disappears after about three weeks. If chlorination is done before discharge to the pipe, a reservoir giving sufficient contact time for effective disinfection is required since bamboo pipe removes chlorine compounds and no residual chlorine will be maintained in the pipe. To avoid possible contamination by ground water, an ever present danger, it is desirable to maintain the internal pressure within the pipe at a higher level than any external water pressure outside the pipe. Any leakage will then be from the pipe, thus, contaminated water cannot enter the pipe.

Use in Other Countries

In many rural areas of Taiwan, bamboo is commonly used in place of galvanized iron (G.I.) for deep wells up to a maximum depth of 150 meters (492 feet). Bamboos of 50 mm (2 inches) diameter are selected, straightened by means of heat, and the inside nodes knocked out. The screen is made by punching holes in the bamboo and wrapping that section with a fibrous mat-like material from a palm tree, Chamaerops humilis. In fact, such fibrous screens are also used in many G.I. tube wells.***

Use of bamboo pipe is also being investigated in Thailand. Results of this work, however, are presently unavailable to the Editors.

*Pounds per square inch

**Kilograms per square centimeter

***D. F. Yung, "Rural Water Supply in Taiwan," Taiwan Institute of Environmental Sanitation, Fuchow Street, Taipei, Taiwan, Republic of China.

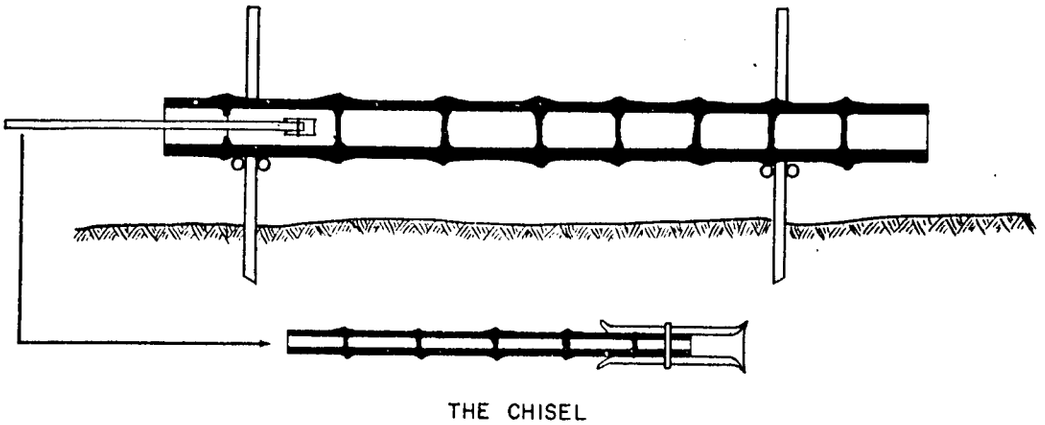

FIGURE 3·1 REMOVAL OF DIVIDING WALLS

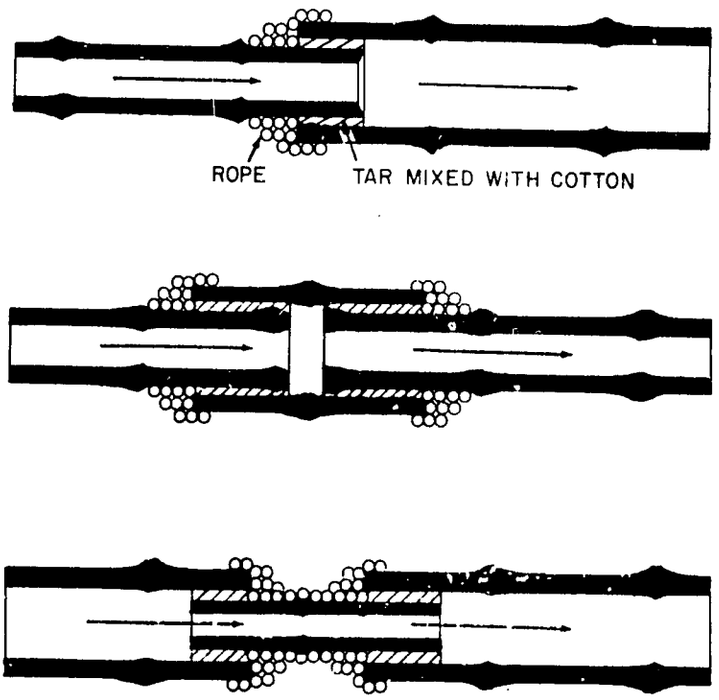

FIGURE 3·2 CONSTRUCTION OF JOINTS

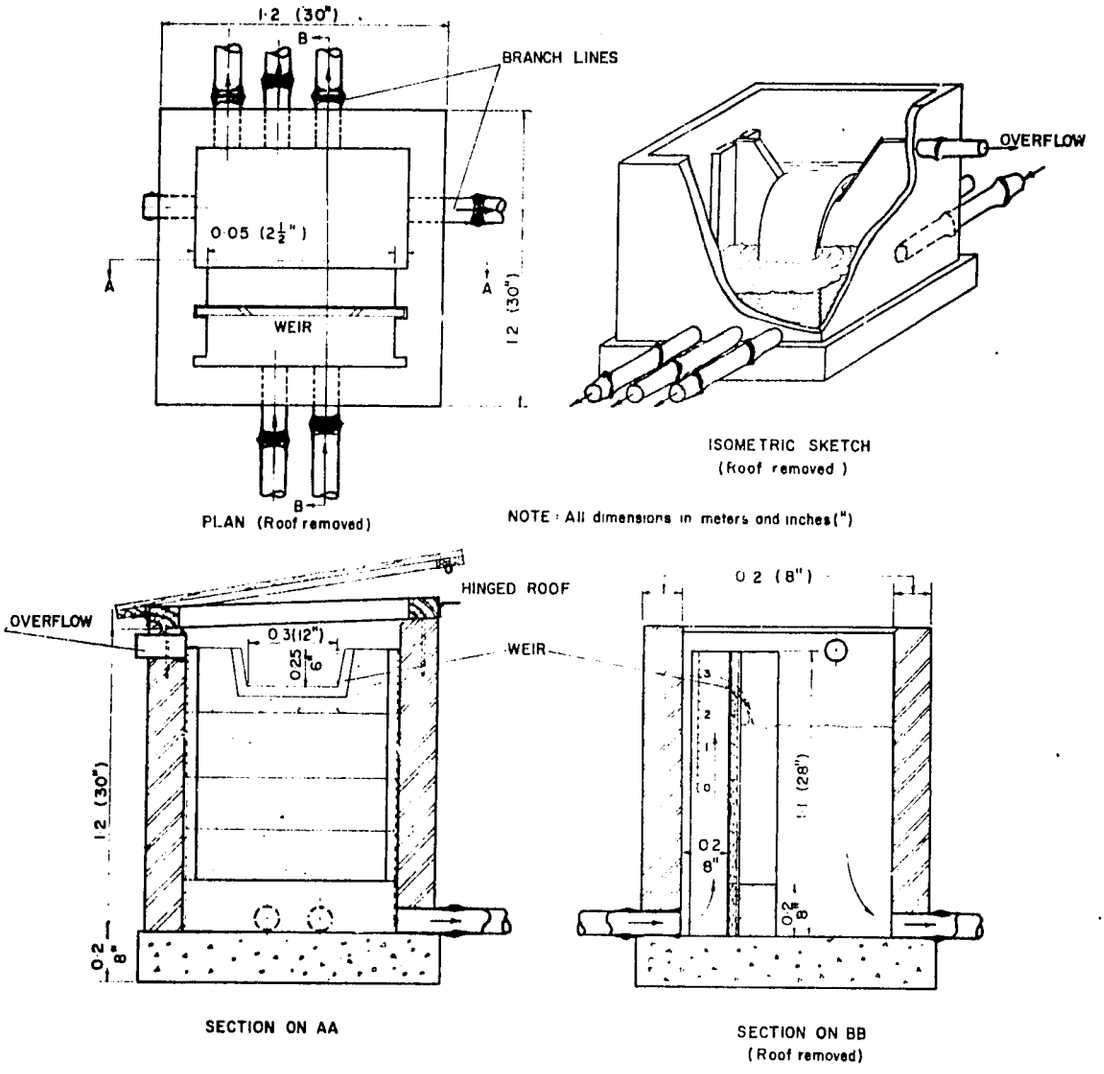

FIGURE 3·3 CHAMBER FOR DISTRIBUTION & PRESSURE RELIEF

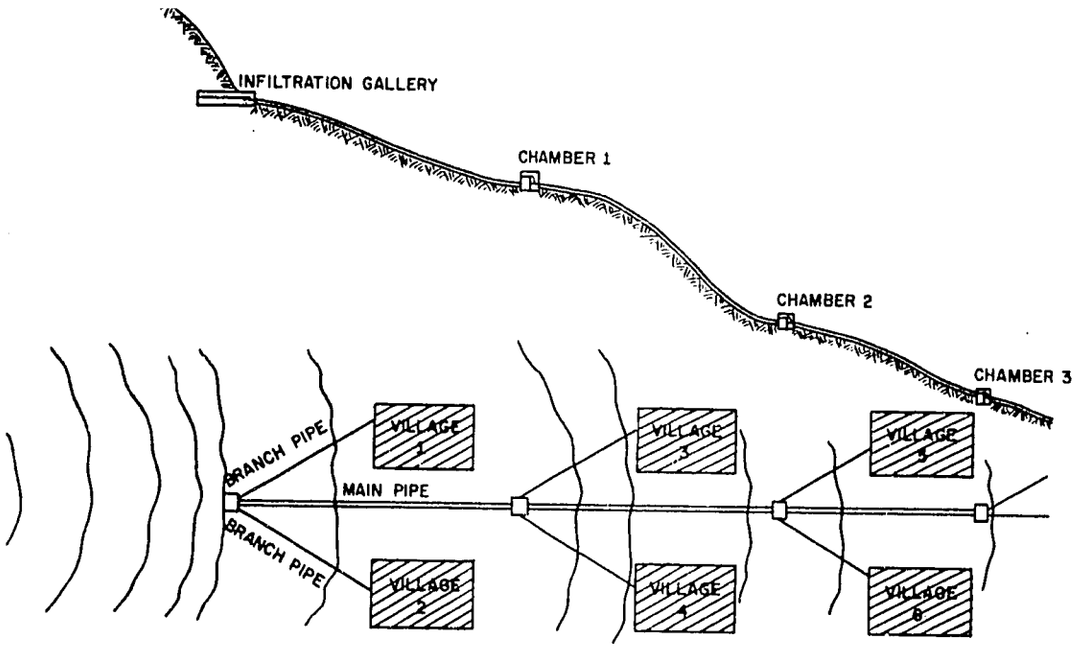

FIGURE 3·4 LAYOUT OF BAMBOO WATER SUPPLY SYSTEM

NOMOGRAPH FOR FLOW IN BAMBOO PIPE

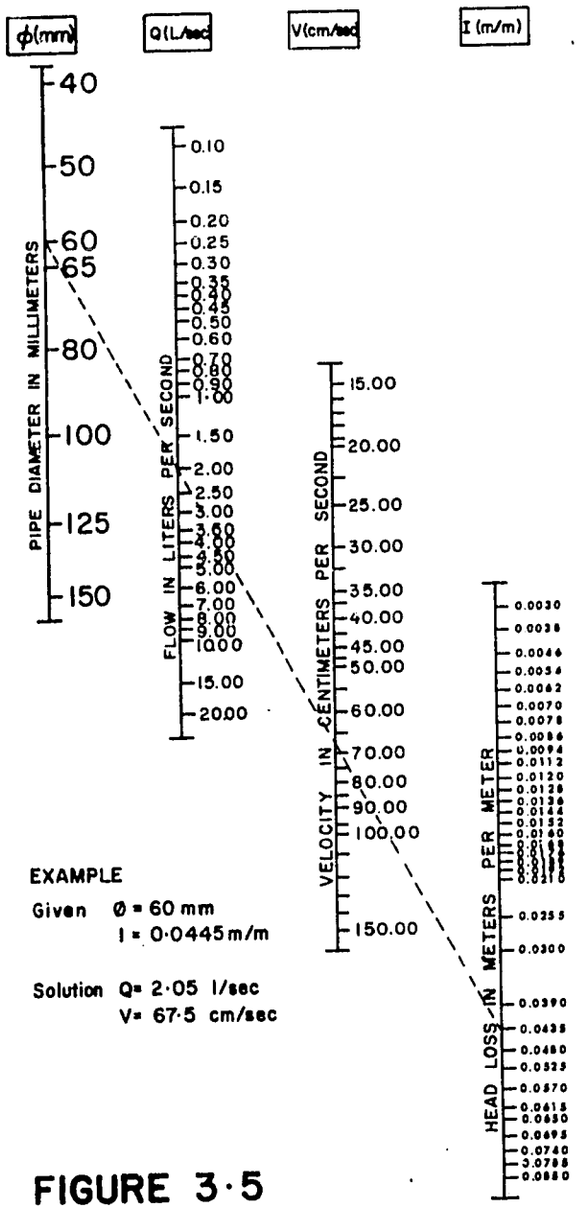

EXAMPLE

Given Ø = 60 mm
I = 0·0445 m/m

Solution Q= 2·05 l/sec
V= 67·5 cm/sec

FIGURE 3·5

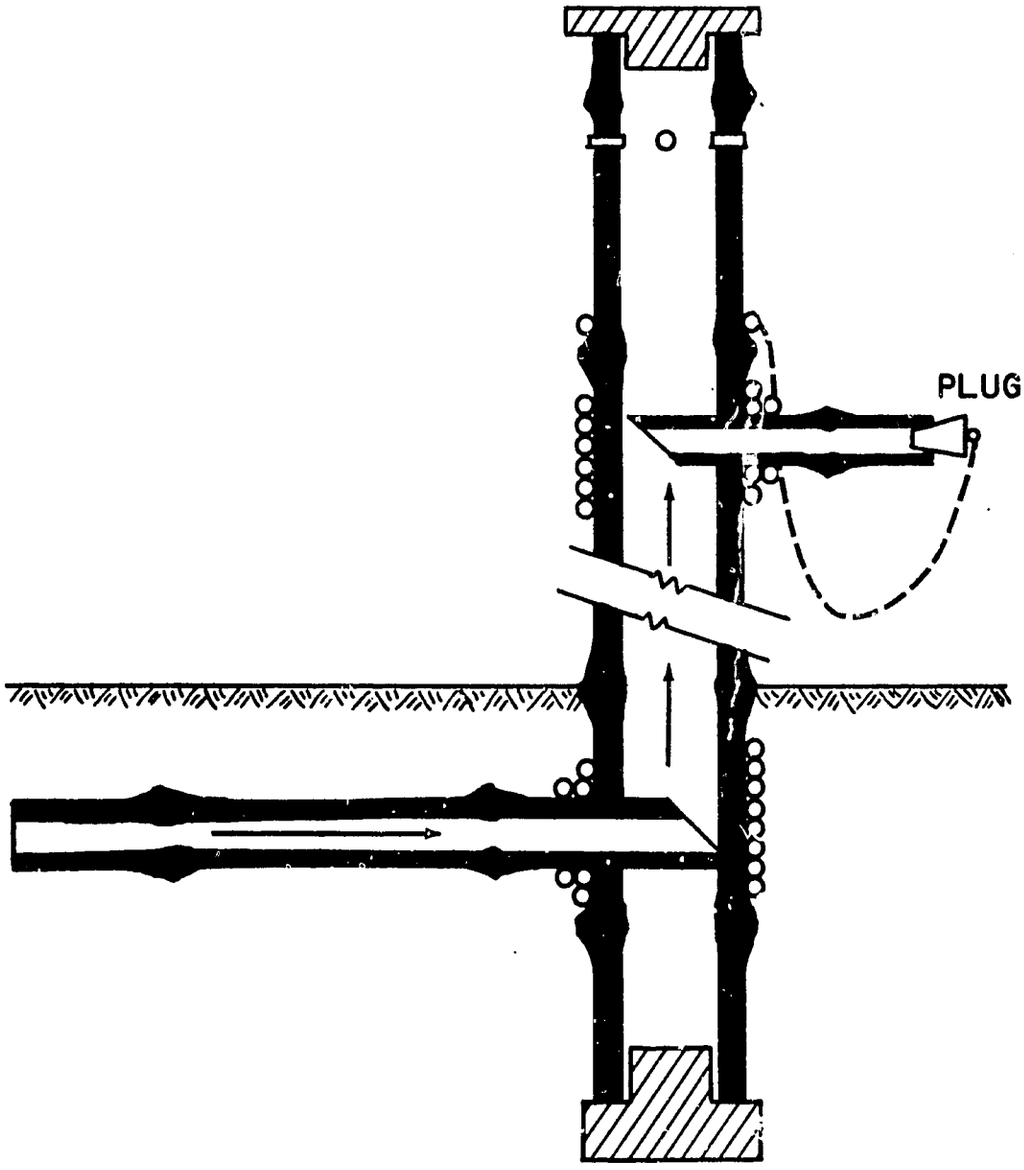

FIGURE 3·6 PUBLIC FOUNTAIN

WATER AND MAN'S HEALTH

Water is a physiological necessity to man; it is also essential to agricultural and industrial development and growth. From time immemorial, man has accepted water wherever he found it and used it to maintain life and for other advantageous purposes. Many people in the world today still pursue this course, either by choice or through necessity. But all men were not forever satisfied with mere acceptance of available water; some conceived the idea that certain waters could be controlled and made more responsive to their needs. In ancient times, control actions took two forms: one, to protect and enhance quality, and another, to improve accessibility and availability.

The beneficial alteration of the quality of water may antedate 2000 B.C. However, in that year "Ousruta Sanghita" - a collection of medical lore in Sanskirt - included a statement that "It is good to keep water in copper vessels, to expose it to sunlight, and filter through charcoal." Other ancient records, including the Bible, refer to water storing, clarifying, filtering, and distilling to make it more palatable and less objectionable for hygienic use. From these days until the present time, man has continued his efforts to improve the palatability and potability of water.

As man increased in numbers, migrated to other land areas and clustered together for greater physical safety, he contributed more and more to the degradation of the water available to him. Diseases and bodily afflictions were not then so well identified and catalogued but people were just as vulnerable to them as they are today. With the improvement of the medical and biological sciences, recognition of the part played by water in the initiation and transmission of diseases and other bodily disturbances became more and more obvious until today there is a frightening array of agents which can exist in water and affect the susceptible person if and when the opportunity is presented.

Many living contaminants of water - the parasitic organisms which take up their abode on or within other living organisms to obtain food - are ready to attack man if they can get to him. Some of these use water as their habitat while others require it to complete their life cycle or as a vehicle to a point of entry to man. Some attack man directly; others need water-living intermediate hosts to produce their attack posture. Water consumed by man may also contain a large number of non-living or chemical contaminants and a variety of them can be present in water both prior to and after its purification. Man, as well as other living matter, is always exposed to background ionizing radiation coming from outer space and from traces of naturally radioactive isotopes. Now he must also worry about artifically-produced radiation.

In a less complicated manner, water is important to man's health. The need to keep the body clean, to remove substances and organisms which can thoughtlessly or unknowingly be caught up in entrances to the body, is of great importance. The small child who rubs his itchy eye with a dirty finger has no realization that he may be pushing the trachoma virus into his eye. Given an opportunity and encouragement to wash his hands, this might never happen. Cleanliness is inimical to external parasites such as lice and mites, and to the fungi responsible for skin diseases. The use and reuse of common utensils in homes and public institutions and places, without adequate cleansing and disinfection, is another cause of disease transmission even among people living in relatively highly advanced countries. Without adequate, safe water, conveniently available, many communicable diseases will just continue to run their disabling course. Dispelling filth, on the person and in the surroundings, requires clean water sufficient to maintain hygienic conditions.

The need for a clear and complete account of the relationship between water and health was recognized by the Community Water Supply Branch of the United States Agency for International Development (AID) and they asked Mr. Arthur P. Miller, formerly a sanitary engineer of the U. S. Public Health Service, to prepare such a document. The result was a 100 page booklet entitled, "Water and Man's Health." This booklet has been printed in English, Spanish, and French and may be obtained, without charge, from the representative of the U. S. Agency for International Development in the capital of your country or from the Community Water Supply Branch, Health Service, Office of Human Resources and Social Development, Agency for International Development, Washington, D. C. 20523, U.S.A.

WATER SUPPLY AND SANITATION IN DEVELOPING COUNTRIES

AGENCY FOR INTERNATIONAL DEVELOPMENT

UNIVERSITY OF NORTH CAROLINA

GERRIT V. R. MARAIS AND FREDERICK E. MCJUNKIN, EDITORS

October 1966

AID-UNC/IPSED Series Item No. 4

FLOAT VALVE HYPOCHLORITE SOLUTION FEEDER

ABSTRACT

A solution feeder to apply solutions of calcium and sodium hypochlorite to water supplies, built from equipment available in plumbing hardware stores, is described.

(Key words: Chlorination, water supply, disinfection)

Source of Information: New York State Department of Health Bulletin No. 21
New York State Department of Health
Albany, New York

Introduction

A feeder for applying solutions of calcium or sodium hypochlorite to water supplies, constructed from equipment available in plumbing and hardware stores, is described herein. Developed by the New York State Department of Health for semi-permanent installation or for use in emergencies, its basic simplicity and low cost fit it for application as a permanent installation in small water supplies in developing countries.

Construction

Figure 4.1 is a diagrammatic sketch of the feeder and a list of materials for building it is given in Table 4.1.

Except for the pipe conducting the mixing water to the barrels, all piping and connections should be of brass or plastic to reduce or prevent corrosion. All bends and connections are of the cross type with the dead ends closed by screw plugs so that solids in the piping can be removed by unscrewing the ends and rodding with stiff wire. To permit rodding, stopcocks or gate valves rather than globe valves should be used as control valves.

An ordinary toilet (water closet) flush tank, A, preferably with an all-plastic mechanism, maintains a constant head or pressure on a small petcock, B, which is used as a control valve.

This publication series is prepared by the International Program in Sanitary Engineering Design (IPSED) under the sponsorship of the Community Water Supply Branch, Agency for International Development (AID), United States Department of State. IPSED is a program of the Department of Environmental Sciences and Engineering, School of Public Health, University of North Carolina at Chapel Hill. Correspondence should be addressed to Frederick E. McJunkin, Editor, IPSED, Box 630, Chapel Hill, N.C., 27514, U.S.A. Publications are supplied free of charge to engineers working in developing countries and may be obtained from U.S. embassies, U.S.A.I.D. missions, or by writing the University. Material for publication is invited.

In order to measure the rate of flow of the solution, sufficient space to permit the insertion of a measuring cylinder should be provided between the small petcock, B, and the funnel, C. This flow measurement is necessary to control the chlorine dosage.

Where the water to be treated runs in an open conduit, or is to be treated in the pump well, the solution may be discharged directly by means of a plastic tubing connected to the funnel beneath the petcock. Where the solution is to be discharged to the suction pipe of a pump, a toilet flush tank may be utilized as a water seal tank. The necessary piping and connections for this purpose are shown in Figure 4.1.

When large supplies are to be chlorinated, the two 50-US-gal. barrels (41.7 UK gal., 189.2 liters) may not be sufficiently large and special wooden or concrete tanks may be required.

Difficulties may be experienced in keeping the constant-head float valve, A, in clean condition. Where the float valve is made of brass, corrosion is a source of trouble. Accurate adjustment to the hypochlorite solution flow rate by adjusting petcock B is difficult as the setting is very sensitive.

Table 4.1

LIST OF MATERIALS

2 50-US-gal. (189 liters) barrels

1 flush tank with float valve

1 flush tank with float valve when needed as water seal tank

12 ft.(3.66m) or more of 1-in.(25 cm) brass pipe

2 1-in.(25 mm) brass stopcocks

4 1-in.(25 mm) brass "crosses" with 6 plugs

1 1-in.(25 mm) brass tee

1 1/4 in.(±6 mm) brass petcock

1 brass reducer to attach petcock to bottom of constant-pressure tank

2 1-in.(25 mm) galvanized iron tees

1 3-gal. wooden bucket and 1 wooden paddle

2 1-in. (25 mm) galvanized iron ells

1 glass or enamel-ware funnel

Sufficient length of 1-in. (25 mm) galvanized iron pipe to conduct water to barrels and to water seal tank

35 ft. of 2 X 4 in. lumber (10.7m X 5 X 10 cm)

8 ft. of 1 X 6 in. boards (2.44 m X 2.5 X 15 cm)

10 ft. of 1 X 12 in. boards (3.05 m X 2.5 X 30 cm)

16 ft. of 1 X 4 in. boards (4.87 m X 2.5 X 10 cm)

1 liter graduated measure

1 pair of household scales

(Plastic materials may be used instead of brass.)

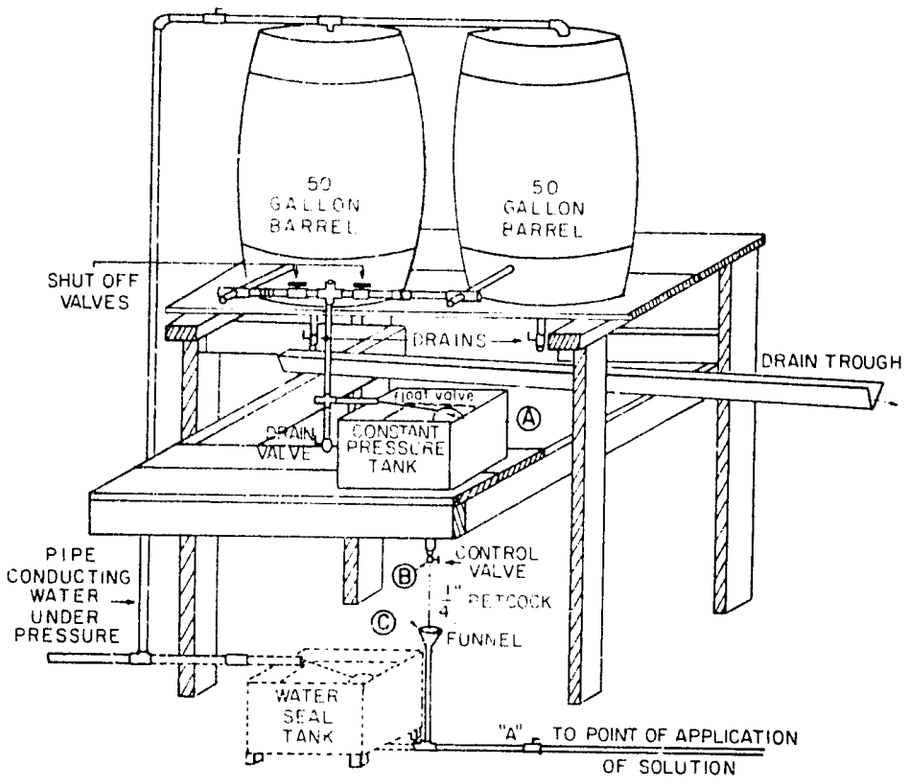

FIGURE 4-1 FLOAT VALVE HYPOCHLORITE SOLUTION FEEDER

WATER SUPPLY AND SANITATION IN DEVELOPING COUNTRIES

ENCY FOR INTERNATIONAL DEVELOPMENT — UNIVERSITY OF NORTH CAROLINA

GERRIT V. R. MARAIS AND FREDERICK E. MCJUNKIN, EDITORS

October 1966 — AID-UNC/IPSED Series Item No. 5

A PROPORTIONAL CHEMICAL FEEDER FOR SMALL WATER PURIFICATION PLANTS

ABSTRACT

An installation in a small water works for feeding chemicals proportional to the raw-water inflow is described. The flow in the influent channel drives a paddle wheel at a speed proportional to the flow rate. The wheel drives a shaft to which arms carrying dosing cups are attached. The rotating arms sweep through the chemical solution, fill, and empty a chemical dose into the raw water. The installation can be manufactured locally.

(Key words: Chlorination, water supply, disinfection)

Source of Information — G. T. Bickley
Water Engineer
Public Works Department
P. O. Box 58
Mbabane
Swaziland

Introduction

Small water purification plants, where circumstances are such that the raw-water flow rate varies over the period of a day, nearly always present problems of feeding the chemicals, usually hydrated lime and alum, proportionally to the rate of flow. An ingenious device, developed in Swaziland in Southern Africa, provides an inexpensive solution and can be made locally.

Construction

Figures 5.1, 5.2, 5.3 and 5.4 show photographs of this device. On each side of the raw-water influent channel is a concrete solution tank holding alum and hydrated lime solutions respectively. The flow of water in the channel between the tanks drives a paddle wheel. Figure 5.5 shows a cross-section of the channel and the position of the paddle wheel in the channel. Upstream of the paddle wheel, a water level higher than the downstream flow level is maintained by damming the channel with a steel weir plate. The flow over the weir falls on the paddles and drives the wheel (Figures 5.2, 5.3).

This publication series is prepared by the International Program in Sanitary Engineering Design (IPSED) under the sponsorship of the Community Water Supply Branch, Agency for International Development (AID), United States Department of State. IPSED is a program of the Department of Environmental Sciences and Engineering, School of Public Health, University of North Carolina at Chapel Hill. Correspondence should be addressed to Frederick E. McJunkin, Editor, IPSED, Box 630, Chapel Hill, N.C., 27514, U.S.A. Publications are supplied free of charge to engineers working in developing countries and may be obtained from U.S. embassies, U.S.A.I.D. missions, or by writing the University. Material for publication is invited.

The paddle wheel drives a horizontal shaft above the wheel by means of an endless chain belt (Figures 5.2, 5.4). This shaft is supported by two bearings outside the tank walls and passes through holes in the walls to the inside of each tank (Figure 5.4). Bolted to each end of the shaft is an arm with a chemical dosing cup welded to the free end. As the shaft rotates, the cup sweeps through the chemical solution in the tank and empties a fixed volume of the solution to a funnel appropriately located above the shaft (Figure 5.4). The bottom of the funnel is connected to a plastic hose which discharges the dose to the channel.

The chemical solution tanks are lined with glass-fiber-reinforced plastic to prevent corrosion by the chemicals. The dosing cups and arms are of steel which corrodes rather quickly, but they are cheap and easy to make and replace. The alum and hydrated lime are mixed into solution in 45-UK-gal. (200-liter, 55-US-gal.) drums and the solution is transferred to the tanks by means of plastic buckets.

Operation

Speed of rotation of the paddle wheel is approximately proportional to raw-water flow rate; hence the dosing cups deliver a chemical dose proportional to the flow.

Rate of dosage is adjusted by the attendant to suit the quality of the water by setting the angle of the chemical solution cups to empty more or less solution per revolution.

Application

Correct dosage of the chemicals will depend on the raw water. Each water tends to have its own characteristics and requires experimental investigations to obtain good results and to determine the simplest method of control. This aspect falls outside the intent of this item, but it is of interest to note the simple method of control used at the water works where the proportional feeder described above is installed.

The treatment plant is located in granite country with rainfall from 35 to 60 in. (90 to 150 cm) yearly, 80 percent occurring during the summer months September to April. The majority of streams are perennial, the water during the dry winter season being clear with very little suspended matter. During the early summer rains, dust and burned grass enter the water courses and cause noticeable discoloration of the stream flow. A typical chemical analysis of the raw water during the winter gives:

pH = 6.7
Organics = Nil
Iron = Nil
Manganese = Nil
Turbidity (Silica scale) = 7.1 mg/l
Total Alkalinity = 13.0 mg/l
Total Hardness = 15.8 mg/l

This analysis indicates that the water is relatively unbuffered and very corrosive.

Lime dosage to bring the pH of the raw-water, as measured by a comparator, up to a value between 8.5 and 9.0 is determined by trial and error. This dosage is added upstream of the paddle wheel. Alum dosage added downstream of the paddle wheel is then adjusted to bring the pH of the water back to between 6.8 and 7.0. Good flocculation is obtained and the settled water has a pH of about 7.2.

These dosages are readily obtained by a semi-skilled water works attendant, who also has the responsibility to make adjustments when the raw water quality changes.

It must be emphasized that the pH values used here are applicable to this water only.

Performance

The installation, which has given excellent and trouble-free service, has been so successful that a similar installation to feed hypochlorite solution for disinfection of the treated water is now proposed.

FIGURE 5·1 GENERAL VIEW FROM DOWNSTREAM

FIGURE 5·2 CLOSE-UP VIEW FROM DOWNSTREAM

FIGURE 5·3 WEIR AND PADDLEWHEEL

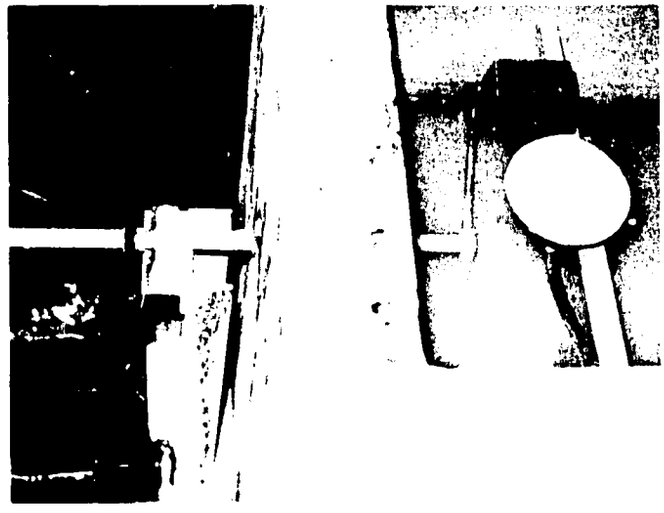

FIGURE 5·4 DOSING CUP LAYOUT

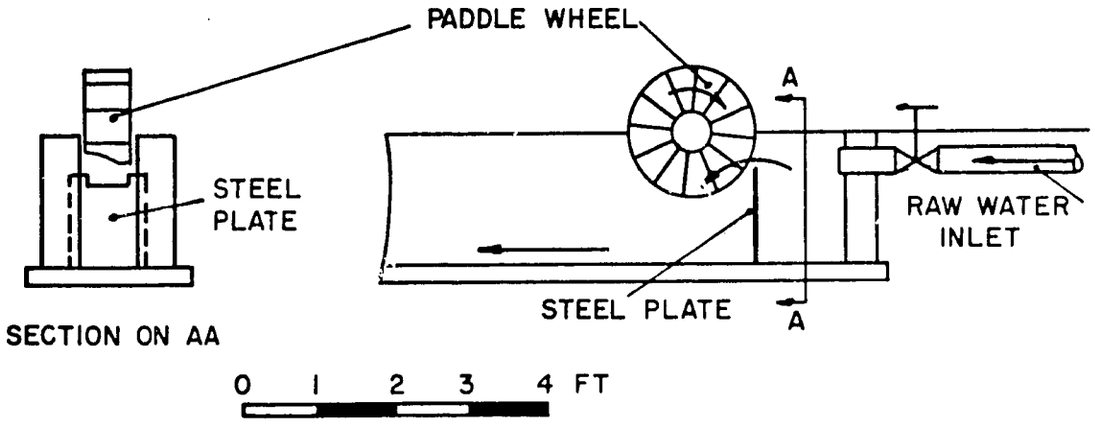

FIGURE 5·5 LOCATION OF PADDLE WHEEL AND STEEL PLATE IN CHANNEL

WATER SUPPLY AND SANITATION IN DEVELOPING COUNTRIES

AGENCY FOR INTERNATIONAL DEVELOPMENT

UNIVERSITY OF NORTH CAROLINA

GERRIT V. R. MARAIS AND FREDERICK E. MCJUNKIN, EDITORS

October 1966

AID-UNC IPSED Series Item No. 6

INDIVIDUAL HOUSEHOLD DISINFECTION AND FILTER UNIT FOR TURBID WATERS

ABSTRACT

A simply constructed and operated small water purification unit, constructed entirely of local materials, is described.

(Key words: Water supply, water treatment, disinfection, filtration)

Source of Information: Department of Health
10 Tosari
Djakarta
Indonesia

Introduction

In rural and urban areas common sources of water supply are shallow wells sunk in backyards or surface waters collected in earth dams or drawn from streams. These waters are often subject to bacterial contamination and may be turbid. This report describes a simple purification and disinfection procedure suitable for individual households.

Purification Installation

Figure 6.1 shows a diagrammatic sketch of the installation, consisting of:

(1) Raw Water Container. A drum or any receptacle, A, of about 100 liters (26.4 US gal., 22.0 UK gal.) or greater capacity is placed on a pedestal, Z. Two taps are set in the drum; the first tap, B, in the bottom and the second tap, C, in the side about 10 cm (4 in.) above the bottom.

(2) Sand Filter. A clean kerosene (paraffin) tin or similar receptacle, D, of about 3 to 4 gallons (13 to 18 liters) capacity catches raw water from tap C. Tap E, set in the side of D, just above the bottom of the tin, is connected on the inside of the tin with a perforated rubber or plastic collecting hose about 1/2 in. (12 mm) diameter. A layer of gravel of about 10 mm average size surrounds the hose to a depth of about 100 mm (4 in.) above the hose. A layer of about 30 cm of clean river sand with average size grains of about 1/2 mm is placed on top of the gravel layer. A splash plate of enamel or china plate is placed on top of the sand.

This publication series is prepared by the International Program in Sanitary Engineering Design (IPSED) under the sponsorship of the Community Water Supply Branch, Agency for International Development (AID), United States Department of State. IPSED is a program of the Department of Environmental Sciences and Engineering, School of Public Health, University of North Carolina at Chapel Hill. Correspondence should be addressed to Frederick E. McJunkin, Editor, IPSED, Box 630, Chapel Hill, N.C., 27514, U.S.A. Publications are supplied free of charge to engineers working in developing countries and may be obtained from U.S. embassies, U.S.A.I.D. missions, or by writing the University. Material for publication is invited.

(3) Clean Water Reservoir. A covered container, F, receives the filtered water. It has two taps, I and G, set in the sides near the bottom. Tap G, is connected to an activated charcoal filter, H. Tap I, is used to fill pails or other receptacles.

(4) Charcoal Filter. A cylindrical container, H, of mild steel about 30 in. (76 cm) in length and 10 in. (25 cm) in diameter and painted on the inside with asphalt to reduce corrosion is filled either with activated charcoal obtained commercially (Norite RII) or charcoal made from coconut shells. To prevent clogging of the connecting piping, the charcoal is placed between top and bottom layers of fibrous material such as palm fiber. Water from tap G is filtered through this container and residual color and taste are removed. The charcoal filter is not essential to health; its use depends primarily on the degree of removal of color and taste-producing agents desired.

(5) Other Materials. One mixing stick of bamboo or wood, one tablespoon (10 gm), one teaspoon.

Chemicals

Aluminum sulfate or potassium alum
Calcium carbonate
Calcium hypochlorite powder
Activated charcoal or charcoal made from coconut shells

Operation

(1) Disinfection. Close all the taps and fill drum A, with raw water to within 4 in. (10 cm) of the brim. For every 100 liters (22 UK gal., 26.4 US gal.) of water in the drum dissolve one-half teaspoon of calcium hypochlorite in a glass of water and add to the contents of drum A. Stir gently (without splashing) for about five minutes. At the end of this period, test the liquid by smelling for chlorine; a penetrating sensation in the nose indicates that the water has sufficient chlorine residual. If the chlorine is not detectable by this method, repeat the hypochlorite dosage as described above. This process destroys the bacteria in the raw water.

(2) Sedimentation. For every 100 liters (22 UK gal., 26.4 US gal.) of water in the drum, make a solution of one tablespoon, (10 gm), of aluminum sulphate or two tablespoons of potassium alum in a glass of water and add to the drum contents. Stir gently for about 3 minutes (or longer) until a sediment or floc starts to form. Add one tablespoon (10 gm) of calcium carbonate stirring continuously. A coarse floc should form. Allow about half an hour or longer for the floc to settle to the bottom. Drain as much as possible of the floc through tap B.

(3) Filtration. Tap C is opened and the water flows onto the splash plate until tank D is filled. With tap C open, tap E is opened sufficiently to keep the level of the liquid in the sand filter container approximately constant, but always above the level of the top sand surface. Initially, the filtered water from tap E will have a cloudy color; this water can be wasted if desired. When the flow clears it is caught in the covered container F.

Drinking water is drawn off through the carbon filter, H; water for other purposes is drawn from tap I. If the carbon filter is not installed, both drinking water and water for other purposes are drawn from tap I.

A simpler and less expensive version of the above installation is shown in Figure 6.2.

SMALL SCALE PURIFICATION OF TURBID SURFACE WATER

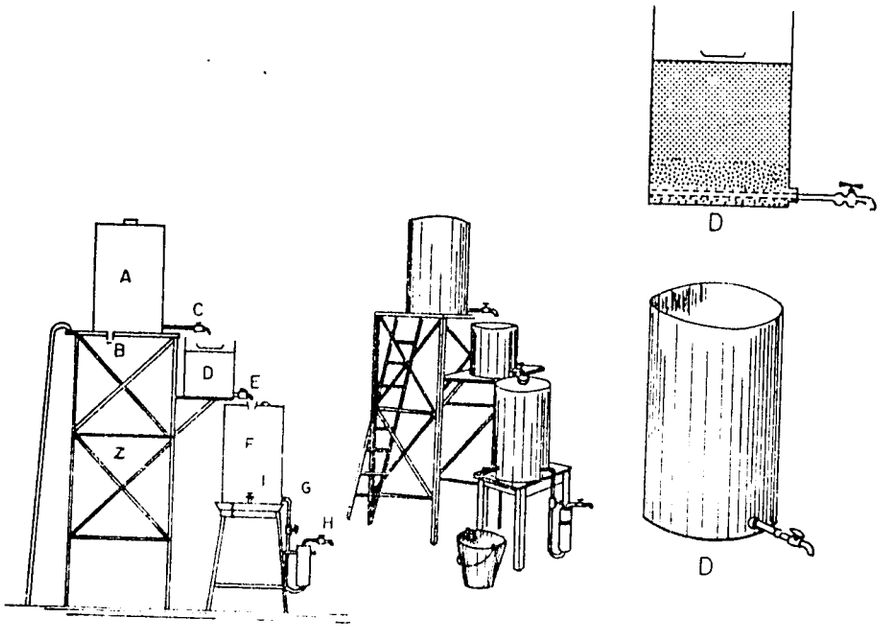

FIG. 6·1 HOUSEHOLD WATER PURIFICATION PLANT

SMALL SCALE PURIFICATION OF TURBID SURFACE WATER
SIMPLER AND LESS EXPENSIVE

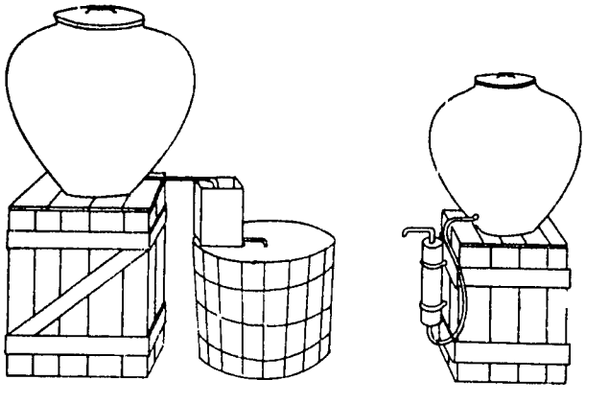

FIG. 6·2 HOUSEHOLD WATER PURIFICATION PLANT

WATER SUPPLY AND SANITATION IN DEVELOPING COUNTRIES

AGENCY FOR INTERNATIONAL DEVELOPMENT

UNIVERSITY OF NORTH CAROLINA

GERRIT V. R. MARAIS AND FREDERICK E. MCJUNKIN, EDITORS

October 1966

AID-UNC/IPSED Series Item No. 7

FLOATING PLATFORM HYPOCHLORITE SOLUTION FEEDER

ABSTRACT

A simple chlorinator readily made from local materials and suitable for disinfection of small water supplies is described. It can be pre-set to feed solution at a given uniform rate.

(Key words: Water supply, disinfection, chlorination)

Source of Information Bulletin No. 21
New York State Department of Health

Introduction

A simple chlorinator easily made from locally available materials is the floating platform solution feeder shown in Figure 7.1. Essentially the rate of feed is controlled by maintaining a constant pressure head on orifice A by floating it at a constant depth beneath the liquid surface. In operation the floating platform solution feeder has the distinct advantage over the solution feeder described in AID-UNC/IPSED Series Item No. 4 in that it does not require a constant-head float valve which is difficult to keep clean and, unless constructed of special material, is subject to corrosion. Furthermore, the equipment shown by Figure 7.1 does not rely on a small control valve to permit a change in the rate of flow of solution but rather on adjusting the degree of pressure on a constant-size orifice. Experience has shown that this type of control of the rate of flow of solution is more accurate than that secured through the use of control valves or petcocks.

Construction

The concrete storage tank may be constructed to any desired size, but its effective depth should not be greater than three to four feet in order to minimize the length of flexible rubber tubing used. A feasible size, for example, might be a tank three feet deep, three feet wide and four feet long. Such a tank would hold 220 UK gal. (1000 liters, 265 US gal.) of hypochlorite solution, which at one percent

This publication series is prepared by the International Program in Sanitary Engineering Design (IPSED) under the sponsorship of the Community Water Supply Branch, Agency for International Development (AID), United States Department of State. IPSED is a program of the Department of Environmental Sciences and Engineering, School of Public Health, University of North Carolina at Chapel Hill. Correspondence should be addressed to Frederick E. McJunkin, Editor, IPSED, Box 630, Chapel Hill, N.C., 27514, U.S.A. Publications are supplied free of charge to engineers working in developing countries and may be obtained from U.S. embassies, U.S.A.I.D. missions, or by writing the University. Material for publication is invited.

strength (1% chlorine by weight), would be sufficient to treat 150 UK gpm* (185 US gpm,** 700 lpm***) at the rate of 10 mg/l**** over a 24-hour period. Application at other rates would be proportional. Wooden barrels are sometimes used instead of concrete tanks. Inner surfaces of tanks are coated with bitumastic enamel or plastic paint to reduce chlorine attack on the concrete and wood.

For cleaning the tank, a brass or copper drain pipe, B, fitted with a brass stopcock or shut-off valve is cast-in-place in the bottom of the tank. Another brass or copper pipe, C, fitted with an elbow and stopcock or shut-off valve is cast-in-place in an end wall. The inside end of this pipe is connected to a flexible, thick-walled, soft rubber or plastic tube, D. The other end of rubber tubing is securely fastened to the lower end of a one-quarter inch (6 mm) brass or copper tubing, E, supported by a wooden float. The rubber tube should be long enough to allow the float to move freely from top to bottom of the tank. Orifice A is the leg of a one-quarter inch (6 mm) tee; the run is part of tube E. Tube E should be long enough to extend above a wooden guide, F, when the float is near the tank bottom. Tube E is open at the top end. Guide F, placed across the top of the tank, is a wooden plank about two by four inches (5 X 10 cm) in cross section, with a hole, somewhat larger than the outer diameter of tube E, drilled in the center. Tube E must be able to move freely through the hole in the guide as the liquid level changes.

Tubes D and E are supported by a wooden float in which a centered hole about one and one-half inches (40 mm) in diameter is drilled. A large rubber stopper, G, fitting this hole is used to provide an adjustable connection. The stopper should have a hole drilled through it about the diameter of the outside of the tube. Submergence of the orifice below the level of the solution in the tank may be adjusted by moving the tube up or down through the rubber stopper. If the diameter of the hole in the stopper is correctly bored, then adjustment of orifice submergence (and flow rate) can be readily made when the stopper is temporarily loosened from the float. The wooden float should be coated with several layers of asphaltic or enamel paint to prevent the absorption of the solution.

If the one-quarter-inch (6 mm) diameter brass orifice, A, is adjusted so that the center line of the orifice is one inch below the surface of the solution, the flow of solution through the orifice and rubber tubing will be about one-quarter gpm (approximately 1 lpm). Flow rates may be measured (and calibrated) by timing the period required to fill a flask of known volume at valve H. Higher or lower flow rates are achieved by raising or lowering orifice A, that is, by pushing tube E up or down through the rubber stopper.

A flow rate of one-quarter UK gpm is equivalent to 360 UK gpm in twenty-four hours. This rate of flow is higher than normally required; hence an orifice one-eighth inch (3 mm) in diameter may be necessary. Such an orifice may be made by screwing a one-quarter-inch (6 mm) petcock into the one-quarter-inch orifice, because such petcocks have free openings about one-eighth inch (3 mm) in diameter. Another expedient is to put a short length of rubber tubing, with an outer diameter of about one-quarter-inch and an inner diameter of about one-eighth inch, into the one-quarter inch orifice opening. An orifice one-eighth inch (3 mm) in diameter under a head of one-half inch (13 mm) will provide a flow of about 60 UK gpm (190 liters) per twenty-four hours. Increasing the head on the orifice to one inch (25.4 mm) will increase the flow rate about 50%, two inches (50.8 mm) about 100%.

*United Kingdom gallons per minute = 1.2 US gallon per minute
**United States gallons per minute
***Liters per minute
****milligrams per litter

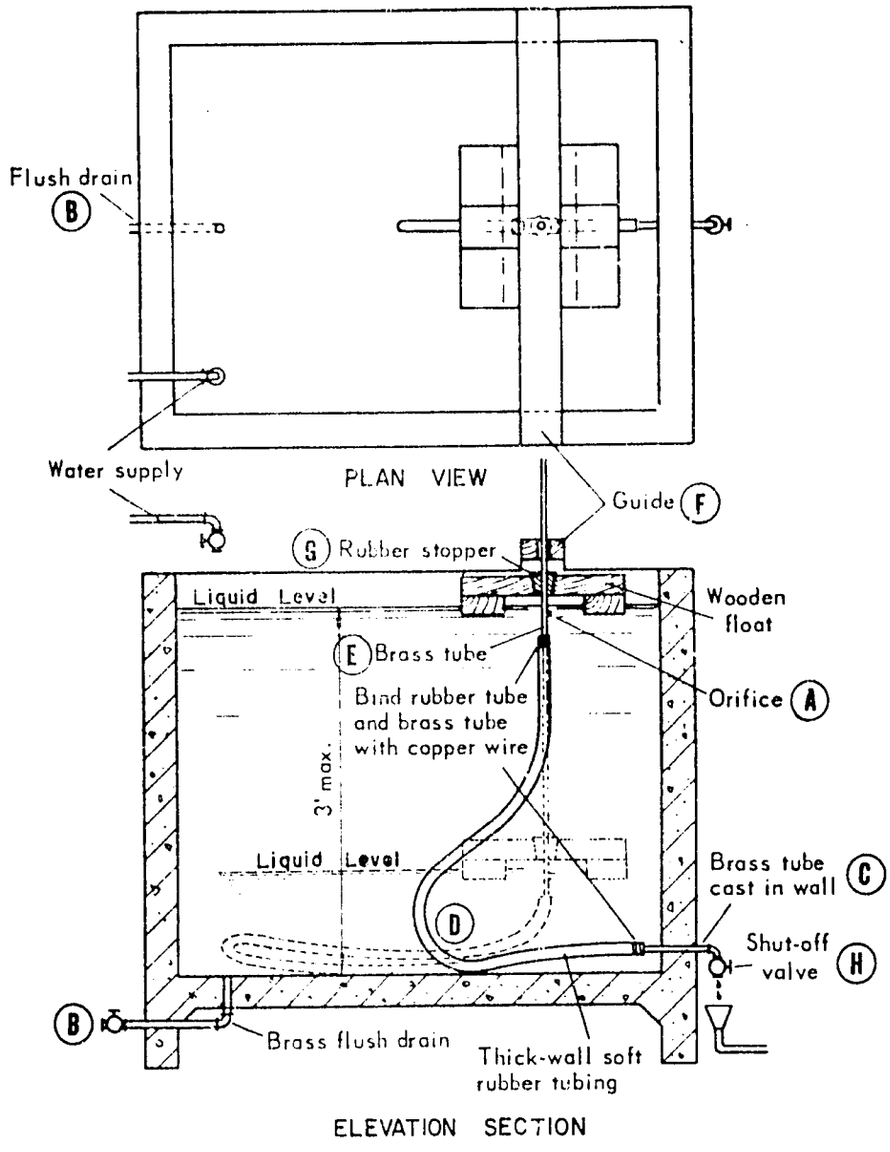

FIGURE 7·1

FLOATING PLATFORM HYPOCHLORITE SOLUTION FEEDER

REGIONAL SCHOOL OF SANITARY ENGINEERING
ESCUELA REGIONAL DE INGENIERIA SANITARIA

Los estudios de Ingeniería Sanitaria a nivel de post-grado, fueron establecidos en la Facultad de Ingeniería de la Universidad de San Carlos de Guatemala con carácter regional, para Centroamérica, de acuerdo con la resolución del Consejo Superior Universitario Centroamericano - CSUCA - en su III Reunión Ordinaria.

La Escuela Regional ha sido planeada para dotar a Centroamérica de una Institución regional, capaz de tener a su cargo, en forma permanente, la educación avanzada en el campo de la Ingeniería Sanitaria, para llenar la creciente demanda de Ingenieros de esta especialidad y colaborar en esta forma en el éxito de los programas de Obras Sanitarias actualmente en ejecución y expansión.

El programa de enseñanza, con duración de un año, está concebido a que los profesionales que participan en el mismo adquieran, además de un conocimiento con sólidas bases científicas y tecnológicas, un concepto fundamental de planeamiento a largo plazo y lo relativo a la programación, diseño, construcción, administración, operación y financiamiento de obras sanitarias.

Como parte y complemento del programa de enseñanza, se da especial interés a la investigación aplicada para adaptar las técnicas y métodos modernos de Ingeniería Sanitaria a las condiciones culturales y económicas de la región.

Las directrices de la Escuela Regional son fijadas por un Comité Consultivo, integrado por representantes de las cinco Universidades centroamericanas. A propuesta de este Comité, se ha puesto énfasis en el programa de estudios en los aspectos fundamentales de agua potable y alcantarillado y disposición de desechos, incluyendo también las actividades generales en los campos de Saneamiento y la Salud Publica.

Por acuerdo entre el CSUCA y Regional Office Central America and Panama, U.S.A.I.D., la Universidad de Carolina del Norte colaborará y participará por medio de su Escuela de Salud Pública, en el programa regional de estudios de post-grado de Ingeniería Sanitaria en la Universidad de San Carlos de Guatemala, a través de un intercambio de profesores y consultores.

Las solicitudes de inscripción deben hacerse en formulario especial, el cual puede obtenerse en la Secretaría de la Facultad de Ingeniería de la Universidad de San Carlos de Guatemala o solicitarlo por la vía postal a la Secretaría General del CSUCA, en San José de Costa Rica. Estas solicitudes deberán presentarse, con duplicado, a la Secretaría General de la Universidad en el país del solicitante o a la dependencia que corresponda. Las solicitudes de profesionales no residentes en Centro América deberán dirigirse directamente a la Universidad de San Carlos de Guatemala.

"NEW FACTORS IN THE DESIGN, OPERATION AND PERFORMANCE OF WASTE-STABILIZATION PONDS"

In the developing countries, unit costs of waste-stabilization ponds are generally low. Moreover, in the tropics and subtropics, environmental conditions are conducive to a high level of pond performance. In view of this, the theory, operation and performance of such ponds under these conditions have been studied. This work has recently been reported by IPSED staff member G.v.R. Marais in the Bulletin of the World Health Organization, Vol. 34 (1966) pages 737-763. Reprints are available from the Editor, IPSED, Box 630, Chapel Hill, N. C., 27514, U.S.A.

WATER SUPPLY AND SANITATION IN DEVELOPING COUNTRIES

AGENCY FOR INTERNATIONAL DEVELOPMENT

UNIVERSITY OF NORTH CAROLINA

GERRIT V. R. MARAIS AND FREDERICK E. MCJUNKIN, EDITORS

October 1966

AID-UNC/IPSED Series Item No. 8

V-NOTCH CONSTANT-HEAD SOLUTION FEEDER

ABSTRACT

A simple chlorinator readily made from local materials and suitable for disinfection of small water supplies is described. It can be pre-set to feed solution at a given uniform rate.

(Key words: Water supply, disinfection, chlorination)

Source of Information — Roger D. Lee, Project Director
Northwest Watershed Project
Route 4, Box 4519
Gig Harbor, Washington 98335

Development Work — Roger D. Lee, Vincente Rubio G. and Gonzalo Procel. The latter two are Ecuadorean engineers of the Servicio Cooperative Interamericano de Salud Publico.

Introduction

The feeder described below was developed in Ecuador to provide a low-cost locally made constant-head feeder for calcium hypochlorite solution.

Construction

(1) Solution container. The solution container is made of Eternit* water tanks in various sizes, but usually of 250-liter (66 U.S. gal., 55 U.K. gal.) capacity, rectangular in shape with rounded interior corners and overlapping covers. To check the volume of solution the tanks are fitted with liquid depth sight gauges made of flat sections of plastic glued or solvent welded together to make a rectangular section and mounted on one side of the tank. The effective volumes of solution in the tank corresponding to the levels in the sight gauge are painted on the tank side. Figure 8.1 shows the general arrangement.

*Trademark for a line of asbestos-cement products.

This publication series is prepared by the International Program in Sanitary Engineering Design (IPSED) under the sponsorship of the Community Water Supply Branch, Agency for International Development (AID), United States Department of State. IPSED is a program of the Department of Environmental Sciences and Engineering, School of Public Health, University of North Carolina at Chapel Hill. Correspondence should be addressed to Frederick E. McJunkin, Editor, IPSED, Box 630, Chapel Hill, N.C., 27514, U.S.A. Publications are supplied free of charge to engineers working in developing countries and may be obtained from U.S. embassies, U.S.A.I.D. missions, or by writing the University. Material for publication is invited.

(2) V-Notch feeder. Figure 8.2 is a diagrammatic sketch of the feeder. It consists of a hollow rectangular float, 37-1/2 x 25 x 20 cm depth (approx. 13 x 10 x 8 in.), of plastic sheets glued or solvent welded together. Attached to the underside of the float is the solution feeder, consisting of a 3-1/2 cm (1-1/2 in.) square plastic block 20 cm (8 in.) long with a 1-1/2 cm (5/8 in.)-diameter hole drilled full length along the axis of the block. The solution feed hose is attached to the outlet of the hole at one end of the rod. A solid plastic rod slides through the hole at the other end. A long V-groove, tapering from full depth at the one end to zero at 2/3 the length of the rod, is cut into the rod. Silicon stopcock grease or petroleum jelly is used to lubricate the rod.

Operation

The rectangular float is weighted in the field with stones or lead slugs for trim and desired submergence. Flow rate is controlled by the combination of submergence of the V-notch (which depends on the ballast in the float) and the size of the V-notch section (which depends on how far the V-notch rod is inserted in the drilled hole). Stoppage due to solids blocking the V-notch is cleared by withdrawing the rod and restoring it to its previous position - the increased opening and flow usually carry the offending particle away. Blockage due to particles settling in the V-groove can also be reduced by inserting the plastic rod with the V-groove at the bottom.

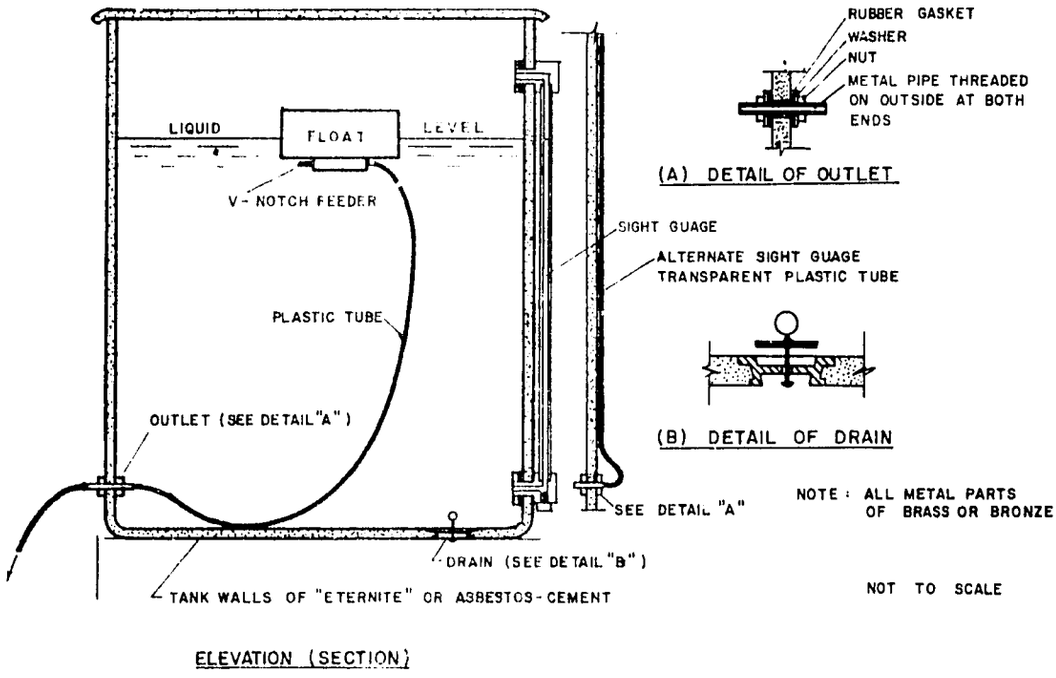

FIGURE 8.1 V-NOTCH CONSTANT-HEAD SOLUTION FEEDER

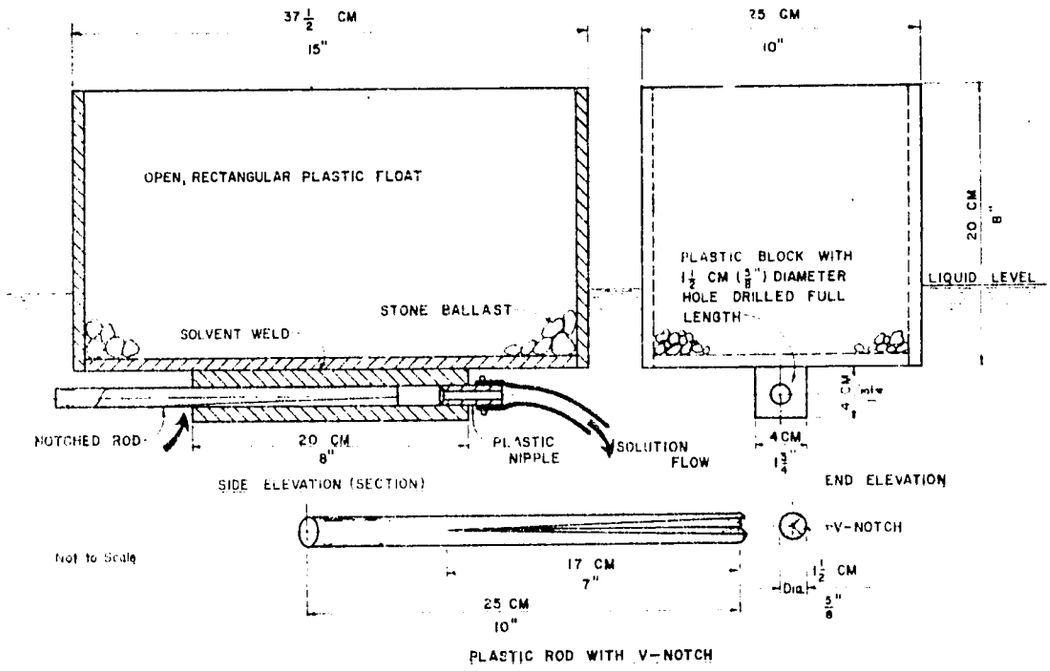

FIGURE 8.2 DETAIL OF FLOAT ASSEMBLY

INTERNATIONAL PROGRAM IN SANITARY ENGINEERING DESIGN (IPSED)

Three of every four people in the world, according to current estimates, suffer from diseases spread by contaminated water supplies and associated insanitary conditions. Furthermore, economic development of many urban communities and regions is handicapped by inadequate supplies of safe water for industrial use. A similar need exists for the sanitary disposal of wastes.

In May, 1959, the Twelfth World Health Assembly endorsed the principle of a global community water supply program, urged Member States to give priority consideration to the program, and invited all multilateral and bilateral agencies having an interest in this field to cooperate with the World Health Organization in carrying out this global water supply operation.

The U. S. Congress then made an appropriation to the International Cooperation Administration (now the Agency for International Development) in support of this program ". . . to assist countries to develop or strengthen business-type, self-sustaining national institutions which will plan and aid financing, construction and management of water supply systems at the community level."

The Charter of Punta del Este, adopted in 1961 to reflect the intent of the American Nations to "strengthen our human potential," states that it is necessary to provide adequate water supply and sewage disposal for not less than 70 per cent of the urban and 50 per cent of the rural population.

The International Program in Sanitary Engineering Design (IPSED), at the University of North Carolina at Chapel Hill, was established in 1962 to assist in the accomplishment of these goals. IPSED is sponsored by the Agency for International Development (AID) of the U. S. Department of State. As one phase of its program, IPSED trains engineers who are or will be responsible for making the preliminary engineering reports, arranging the financing, preparing plans and specifications, and supervising construction of water supply and waste disposal works. Participants are selected from throughout the world by AID on the basis of their responsibilities in community water supply.

A new group of participants begins the program every six months, with each participant's program running eight to twelve months as follows:

3 months at the University of North Carolina.
1 month at a water and/or wastewater treatment plant.
4-8 months in the office of a consulting engineer.
2 weeks at UNC for concluding seminar.

The training program emphasizes design and coverage includes: organization of field surveys and preliminary investigations; preparation of preliminary engineering reports; preparation of detailed plans and specifications, with special emphasis on selection of equipment and materials; supervision of construction; estimating costs of a project; project financing; organization and operation of a design office; and responsibilities in supervision of operation.

The program at UNC is conducted by the staff of the Department of Environmental Sciences and Engineering with visiting lecturers drawn from engineering and agency offices. Group trips are made to water supply and waste-water disposal projects in operation and under construction, to design offices, and to facilities of equipment manufacturers.

Field residence training is by individual assignment to water and waste treatment plants and engineering offices which exemplify outstanding engineering practice and is under supervision of the UNC staff.

Participants entering the Program must have an engineering degree, must have some specialized experience or advanced education in sanitary engineering, and must be able to communicate competently in English. The applicant must submit for review a transcript of college grades and the usual biographical data.

Information as to the present occupation and title of the applicant is also required, as well as assurance from his employer that he will be assigned, on returning to his country, to a position at least equal to that held prior to his training, in which the newly acquired knowledge can be applied.

The U. S. Agency for International Development missions in various countries, in cooperation with host governments, select participants. Those qualified for participation in this program may apply to any of the 80 AID missions overseas, generally located near the U. S. Embassy. In countries where there is no AID mission, inquiries should be directed to the nearest U. S. diplomatic or consular office.

The World Health Organization also sponsors participants in this program, and inquiries may be directed to their headquarters in Geneva, Switzerland, or to any one of their regional offices located in: Copenhagen, Denmark; Manila, Philippines; Alexandria, Egypt; Delhi, India; or their regional office in Washington, D. C. The Ford and Rockefeller Foundations, the Organization of American States, and other such agencies may also sponsor participants.

Inquiries may be addressed to Dr. Daniel A. Okun, Project Director, International Program in Sanitary Engineering Design, P. O. Box 630, Chapel Hill, North Carolina 27514, U.S.A.

WATER SUPPLY AND SANITATION IN DEVELOPING COUNTRIES

AGENCY FOR INTERNATIONAL DEVELOPMENT — UNIVERSITY OF NORTH CAROLINA

GERRIT V. R. MARAIS AND FREDERICK E. MCJUNKIN, EDITORS

October 1966 — AID-UNC/IPSED Series Item No. 9

FLOATING BOWL HYPOCHLORITE SOLUTION FEEDER

ABSTRACT

A simple chlorinator readily made from local materials and suitable for disinfection of small water supplies is described. It can be pre-set to feed solution at a given uniform rate.

(Key words: Water supply, disinfection, chlorination)

Source of Information A. H. Taylor
Central Housing Board
P. O. Box 20380
Nairobi
Kenya

Introduction

The floating bowl hypochlorite solution feeder was developed in Kenya to provide low cost chlorination of water supplies. It is very similar in operation to the previously reported Floating Platform Hypochlorite Solution Feeder (AID-UNC/IPSED Series Item No. 7) and the V-Notch Constant-Head Solution Feeder (AID-UNC/IPSED Series Item No. 8).

Construction and Operation

Figure 9.1 is a diagrammatic sketch showing the solution feeder and the tank holding the hypochlorite solution. The feeder, shown in more detail in Figure 9.2, consists of a circular bowl of earthenware or plastic with a central hole in the bottom plugged with a tight-fitting rubber stopper. The bowl floats in the hypochlorite solution, desired submergence, stability and trim being achieved by ballasting the bowl with pebbles of quartzite.

Three copper tubes pass tightly through the rubber stopper. Tube A, of 1/8-in. (3 mm) internal diameter, is located at the center of the stopper with its top end at approximately the same level as the rim of the bowl. It is threaded by a taut nylon string or cord stretched vertically from the bottom of the solution container to a cross member at the top. The string serves as a guide to keep the bowl floating on a

This publication series is prepared by the International Program in Sanitary Engineering Design (IPSED) under the sponsorship of the Community Water Supply Branch, Agency for International Development (AID), United States Department of State. IPSED is a program of the Department of Environmental Sciences and Engineering, School of Public Health, University of North Carolina at Chapel Hill. Correspondence should be addressed to Frederick E. McJunkin, Editor, IPSED, Box 630, Chapel Hill, N.C., 27514, U.S.A. Publications are supplied free of charge to engineers working in developing countries and may be obtained from U.S. embassies, U.S.A.I.D. missions, or by writing the University. Material for publication is invited.

vertical line as the liquid level in the tank falls as the solution is withdrawn.

Tube B, of 1/8-in. (3 mm) internal diameter, allows the solution in the container to flow into the bowl. Inflow rate to the bowl, via tube B, is controlled by the difference in level between the top of the tube and the liquid surface level in the container - the head, H, which can be changed by pushing tube B up or down through the rubber stopper, and thereby altering the inflow rate. Fine adjustment to the flow rate is made by adding or removing pebbles of quartzite from the bowl.

The inflow to the bowl is drained through tube C, of 1/4-in. (6 mm) internal diameter, via a soft plastic tube to the discharge tap set in the side of the container. The diameter of tube C should be large enough to drain the inflow without causing the liquid level in the bowl to rise significantly above the entrance to tube C, as this would be equivalent to adding ballast to the bowl, changing the head, H, and hence the inflow rate via tube B. The top level of tube C should be below that of tube B; otherwise the level of tube C will control the inflow rate.

An alternative bowl arrangement, known as a "floating funnel," is shown in Figure 9.3. This arrangement does not have a guide to control the path of the bowl or "funnel." The guide used in the Floating Platform Hypochlorite Solution Feeder (AID-UNC/IPSED Series Item No. 7) could be adapted for use in either floating bowl or floating funnel feeders.

To stop flow from the feeder, the bowl is lifted above the liquid level in the tank and if equipped with a handle or bail can be stored at the top of the tank when the feeder is not in use. If flow is stopped by closing the outlet at the side of the tank, the bowl will fill and sink to the bottom.

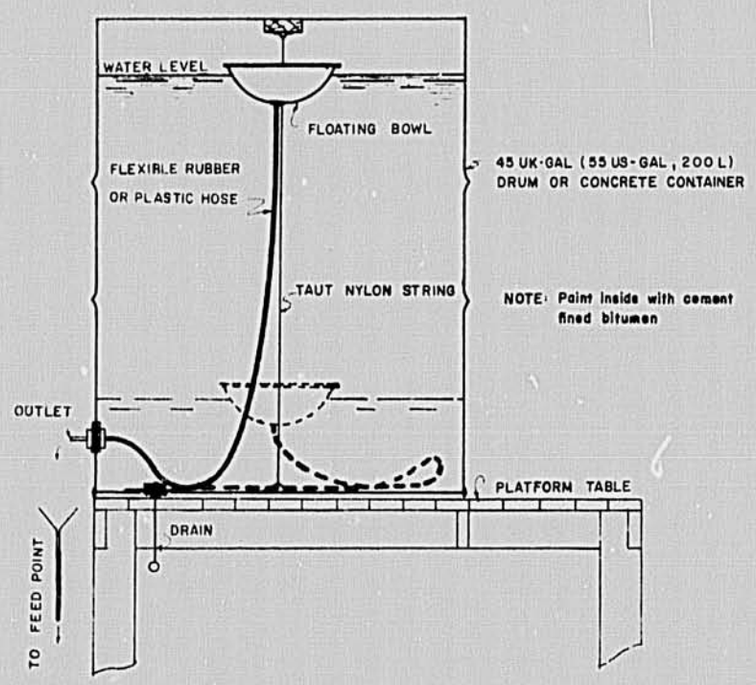

FIGURE 9.1 FLOATING BOWL SOLUTION FEEDER

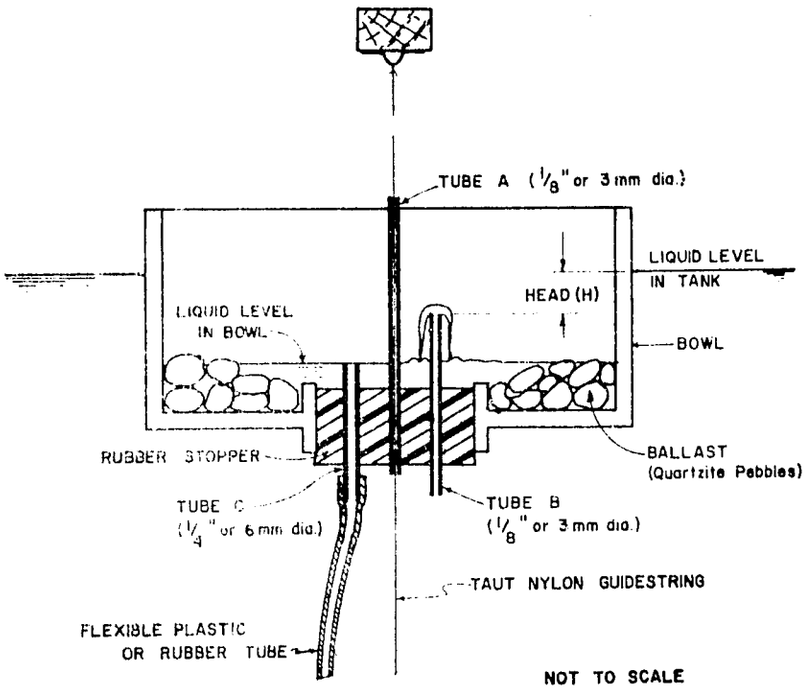

FIGURE 9.2 DETAIL OF FLOATING BOWL (SECTION)

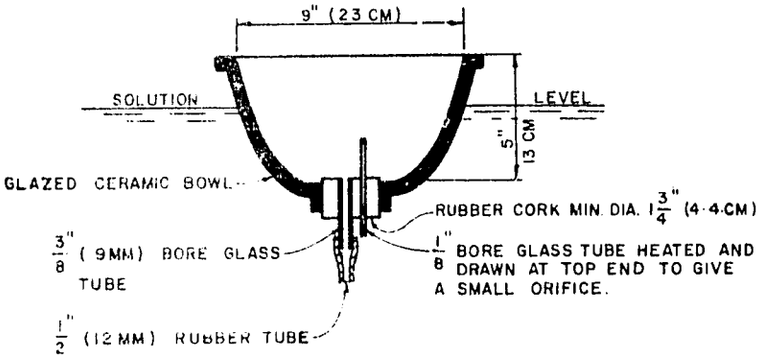

FIGURE 9.3 DETAIL OF "FLOATING FUNNEL" (SECTION)

WHO PUBLICATIONS

The World Health Organization, in its monograph series, has published several books of particular interest to sanitary engineers in developing countries. These include:

"Water Supply for Rural Areas and Small Communities," by E.G. Wagner and J.N. Lanoix (1952). £1 15s. $6.75 Sw.fr. 20.

"Excreta Disposal for Rural Areas and Small Communities," by E.G. Wagner and J.N. Lanoix (1958). £1 5s $5.00 Sw.fr. 12.

"Operation and Control of Water Treatment Processes," by C.R. Cox (1964). £1 17s. $7.25 Sw.fr. 22.

"Snail Control in the Prevention of Bilharziasis," (1965). £1 10s. $6.00 Sw.fr. 18.

WHO publications may be obtained by payment in local currency directly or through a bookseller, from local agents in a number of countries or directly from: WHO distribution and Sales Unit, Palais des Nations, Geneva, Switzerland. Orders addressed to Geneva must be paid for in one of the currencies quoted.

WATER SUPPLY AND SANITATION IN DEVELOPING COUNTRIES

AGENCY FOR INTERNATIONAL DEVELOPMENT

UNIVERSITY OF NORTH CAROLINA

GERRIT V. R. MARAIS AND FREDERICK E. MCJUNKIN, EDITORS

October 1966

AID-UNC/IPSED Series Item No. 10

BOTTLE HYPOCHLORITE SOLUTION FEEDERS

ABSTRACT

Three simple chlorinators, particularly useful in emergencies or for small water-supply systems, quickly and cheaply made from locally available materials are described.

(Key words: Water supply, disinfection, chlorination)

Sources of Information

V. C. Lischer,
"Comments and Suggestions on Design of Rural Community Water Supplies," Symposium on Rural Community Water Supply Development Problems in Southeast Asia.

Bulletin No. 21
New York State Department of Health
Albany, New York

Introduction

Very small water supplies, or larger ones during emergencies, can be chlorinated with bottle hypochlorite solution feeders made from locally available materials.

Siphon-Type Feeder

Figure 10.1 is a diagrammatic sketch of a siphon-type bottle feeder. The hypochlorite container is a 1-to-5-gal. (4 to 20 liter) transparent bottle. The regular stopper of the bottle is replaced by a two-hole rubber stopper of the same size, in which two tubes of glass, brass or copper are inserted. The lower end of tube A should be about 1 in. (2.5 cm) above the bottom of the bottle. Fitted to the upper end of tube A is a short length of rubber tubing with either a laboratory type stopcock or a screw-type pinch clamp, B.

The lower end of the second tube, C, is placed about 2 in. (5 cm) above the bottom of the bottle. (The lower end of tube C should always be above the lower end of tube A). At the upper end of tube C, a length of rubber or plastic laboratory tubing, D, fits tightly over the tube and bends down to a few

This publication series is prepared by the International Program in Sanitary Engineering Design (IPSED) under the sponsorship of the Community Water Supply Branch, Agency for International Development (AID), United States Department of State. IPSED is a program of the Department of Environmental Sciences and Engineering, School of Public Health, University of North Carolina at Chapel Hill. Correspondence should be addressed to Frederick E. McJunkin, Editor, IPSED, Box 630, Chapel Hill, N.C., 27514, U.S.A. Publications are supplied free of charge to engineers working in developing countries and may be obtained from U.S. embassies, U.S.A.I.D. missions, or by writing the University. Material for publication is invited.

inches below the bottom of the bottle. Tube D is held in position by one or more clamps fixed to a support.

The difference in level between the bottom ends of tubes A and D (see Figure 10.1) supplies the net head, H, for siphon flow through tube D. Flow is started by blowing into tube A. The rate of flow can be controlled:

(1) By keeping stopcock B wide open and increasing or decreasing the net head, H, by moving tube D up or down. The rates of flow, marked on the tube D support, are determined by measuring the time required to fill a liquid measure of known volume. Thus, the flow rate can subsequently be set as required

(2) By controlling the inflow of air through stopcock B. When this method is used, the outlet level of tube D is set, with stopcock B open, to give the maximum flow needed; and the required flow is set by adjusting the stopcock opening.

A transparent bottle is essential as the feed control can operate correctly only if there is no free air inlet to the bottle other than that incorporated in the design. The amount of liquid in the bottle, therefore, can be estimated only by visual observation.

A problem with this feeder is that the rubber stopper on the bottle must be removed to replenish the hypochlorite solution or to clean the bottle, thus disturbing the setting for the flow rate. The setting can, however, be maintained by (1) marking the tubing A above the rubber stopper and making a corresponding reference mark on a wall, or (2) brazing or soldering to tube A a stop bar which bears on the rim of the mouth of the bottle. When the stopper is removed, it is replaced so that the mark on the tube is at the same level as that of the reference point, or, if the stop bar is used, the stopper is replaced so that the stop bar rests on the rim of the bottle mouth.

Every time it is necessary to remove the rubber stopper, the bottle must be filled completely with solution before it is put back into operation. If the bottle is not refilled the flow will, for a period of time afterwards, be greater than that indicated by the setting, because the pressure of the air in the bottle is atmospheric initially.

Sound practice is to have at least two bottle feeders should the bottle in operation be broken or blockages occur in its feed pipe. The stand-by bottle should be used regularly, otherwise its hypochlorite solution will become stale. Where flow rates between day and night are considerably different, say in excess of 20%, two feeders operating at different rates are desirable, one for night and one for day.

Liquid Seal Type Feeder

Figure 10.2 shows a liquid seal chlorinator, consisting of a bottle filled with the hypochlorite solution, turned upside down, and resting on a glass, ceramic or wooden container. Solution flows from the bottle, raising the fluid level in the bottom container to the mouth of the bottle, thereby sealing it. While there is solution in the bottle this level is automatically maintained.

Solution is siphoned from the bottom container, the rate being controlled by the head, H, the difference in level between the outlet of the siphon tube and the liquid level in the bottom container. Feed rates are changed by setting the outlet at different levels, and these rates can be marked on a support as shown in Figure 10.2. Hypochlorite solution drips into a funnel located below the siphon feeder outlet and connected to the pipe conducting the water to be treated. This method obviously will not work if the hydraulic grade line above the pipe conducting the water to be treated is higher than the funnel. When the solution is discharged to the suction pipe of a pump a water-sealed tank is needed to prevent air entering the suction pipe. A diagrammatic sketch of such a tank is shown in Figure 10.2.

In emergencies it may not be possible to install a regular water-seal tank. The feed tube is connected directly to the suction pipe as shown in Figure 10.3, the feed rate being controlled by means of a pinch cock or a screw valve in the feed line. It is not possible to regulate the feed rate accurately, but, provided the dosage is bigger than the minimum required, the only objection will be the chlorine taste in the water.

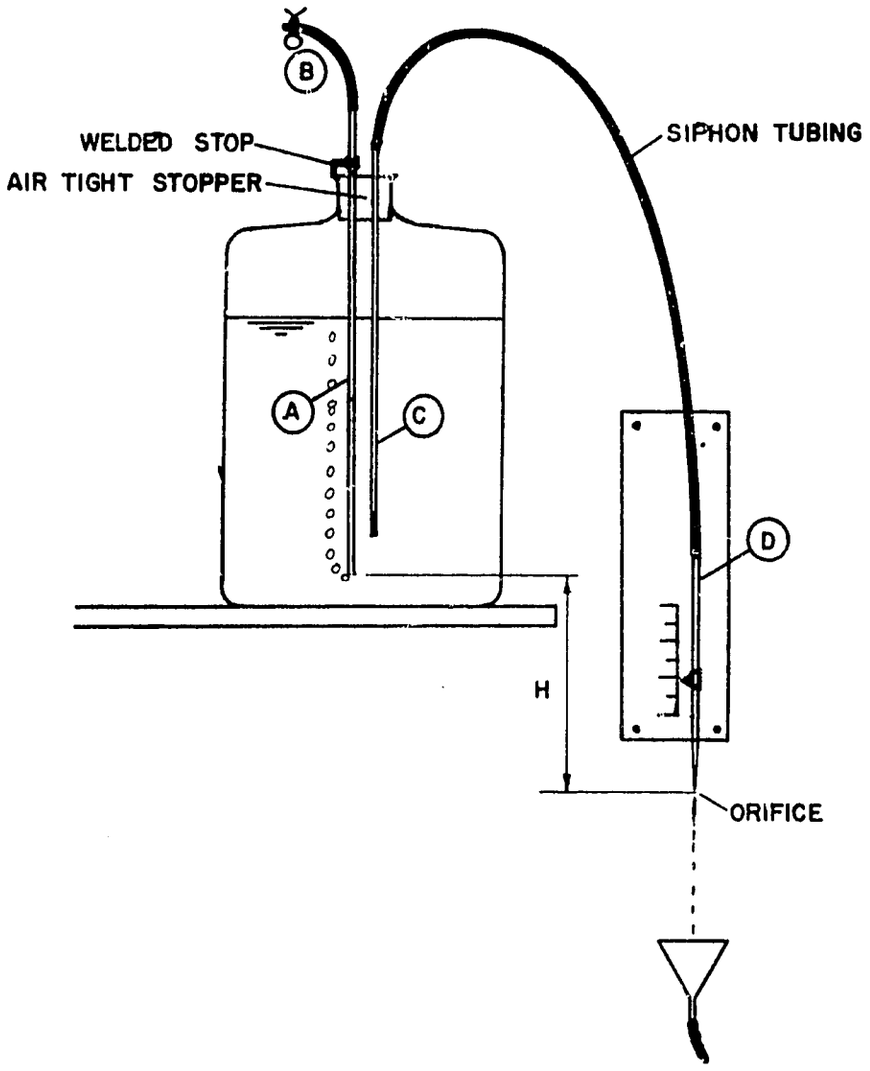

FIGURE 10·1 BOTTLE SOLUTION FEEDER
(Siphon Type)

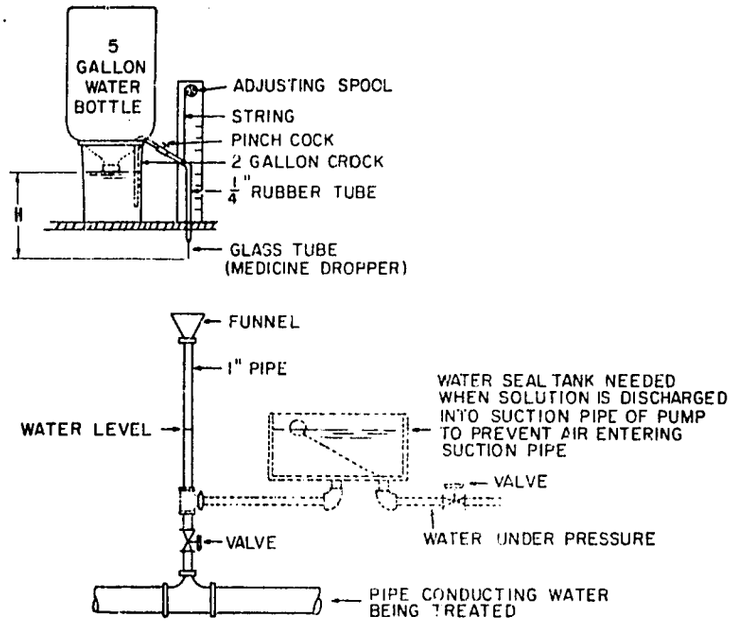

FIGURE 10·2 BOTTLE SOLUTION FEEDER
(Liquid Seal-Siphon Type)

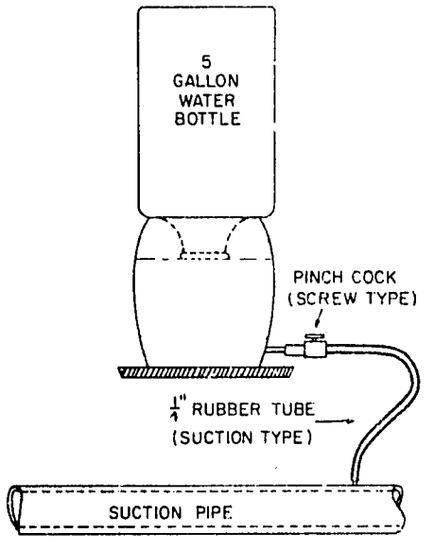

FIGURE 10·3 BOTTLE SOLUTION FEEDER
(Liquid Seal-Suction Type)

WATER SUPPLY AND SANITATION IN DEVELOPING COUNTRIES

AGENCY FOR INTERNATIONAL DEVELOPMENT — UNIVERSITY OF NORTH CAROLINA

GERRIT V. R. MARAIS AND FREDERICK E. MCJUNKIN, EDITORS

October 1966 — AID-UNC/IPSED Series Item No. 11

CHARACTERISTICS OF THE UNKNOWN PUMP

ABSTRACT

A method of approximating performance characteristics and determining power requirements and safe operating pressures by an analysis of the physical measurements of a centrifugal pump is presented.

(Key words: Pumps, Pumping, Centrifugal Pumps)

Introduction

An all too common problem when designing or operating systems in which older or secondhand centrifugal pumps must be used is lack of information on their operating characteristics. Information from the manufacturer may not be available and field testing may be impractical. In such instances a method developed by Mr. Igor J. Karassik may be used by advantage. Performance characteristics, power requirements and safe operating pressures may be approximated by an analysis of the physical dimensions of the pump itself. The following pages reproduce Mr. Karassik's paper published in Public Works, Vol. 90, No. 6, Pp. 111-116 (June 1959) and reproduced with the author's kind permission. Further reproduction is prohibited.

This publication series is prepared by the International Program in Sanitary Engineering Design (IPSED) under the sponsorship of the Community Water Supply Branch, Agency for International Development (AID), United States Department of State. IPSED is a program of the Department of Environmental Sciences and Engineering, School of Public Health, University of North Carolina at Chapel Hill. Correspondence should be addressed to Frederick E. McJunkin, Editor, IPSED, Box 630, Chapel Hill, N.C., 27514, U.S.A. Publications are supplied free of charge to engineers working in developing countries and may be obtained from U.S. embassies, U.S.A.I.D. missions, or by writing the University. Material for publication is invited.

What are the CHARACTERISTICS of the UNKNOWN PUMP?

A method of approximating performance characteristics and determining power requirements and safe operating pressures by an analysis of the physical measurements of a centrifugal pump.

IGOR J. KARASSIK,*
Consulting Engineer and Manager of Planning, Worthington Corporation

GENERALLY, when a centrifugal pump user wishes to determine the performance characteristics of a given pump in his possession, he has a large reservoir of information from which these data can be determined:

a) He will probably have a file copy of the order on which the pump was purchased.

b) In addition, or instead, he may consult the nameplate of the pump. This nameplate generally carries the pump shop serial number, the manufacturer's type designation and the rated conditions of service, including the operating speed.

c) This speed is also listed on the pump driver nameplate or, should this nameplate be missing, from a direct speed measurement on this driver.

If the pump make and serial number are known, it is a simple matter to get the desired information from the manufacturer. If the make but not the serial or other identifying number or letter is known, most manufacturers can identify the pump type and impeller design, if given 1) the nozzle sizes; 2) a sketch showing the external appearance and dimensions of the pump; and 3) the major impeller dimensions.

It is therefore seldom that a pump is available but both pump and driver nameplates have disappeared, no record of the purchase is available and the only thing certain is the physical presence of the pump itself. Nevertheless, it is still possible to carry out certain measurements and calculations to obtain the desired information with some degree of accuracy.

There are two separate phases to the problem of estimating the performance of a centrifugal pump of which one knows nothing except the physical dimensions and proportions. The first phase is the theoretical aspect of the problem which would give us a reasonable approximation of the pump Head-Capacity curve at any given operating speed and the expected power consumption of the pump. The second phase of the problem concerns the practical aspects of the applica-

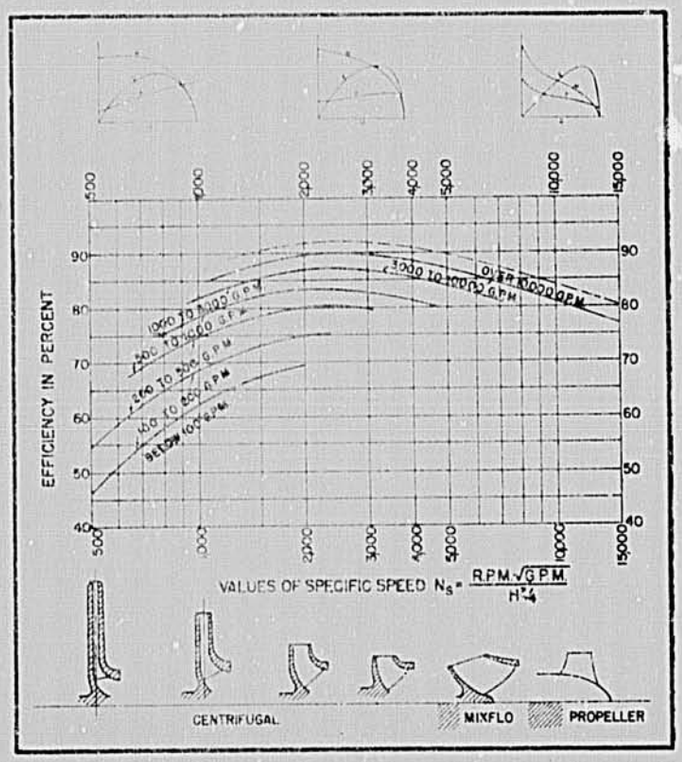

● **FIGURE 1. Typical single suction impeller outlines and their related specific speeds, which remain constant for all geometrically similar pump designs. Above the graph showing efficiencies are curves that illustrate approximate characteristics.**

Reproduction rights are reserved by the author.

tion of the pump to a particular service. Is the physical design of the pump suitable for the power and the speed selected? Is the casing design suitable for the operating pressure? Will the pump operate satisfactorily under the suction conditions contemplated?

Specific Speed

Many of the advances made in the field of centrifugal pump design can be credited to the development and application of the principle of model and prototype relationship in hydraulics. This principle has enabled pump designers to predict the performance of centrifugal pumps on the basis of the behavior of other pumps, smaller or larger in size, operating over a wide range of design conditions, but modelled from and geometrically similar to each other. The concept of "Specific Speed" was introduced to combine the three separate factors of performance characteristics (that is, capacity, head and speed) into a single term such that two pumps geometrically similar to each other have the same specific speed. This concept, therefore, is an extremely useful parameter for correlating the performance characteristics of various types of centrifugal pumps.

Thus, the specific speed of a pump is an *index* of its type, as long as it is determined with reference to the best efficiency point on the pump characteristic curve. We need not present here the mathematical analysis used to establish the relationship between the specific speed and the operating characteristics of a centrifugal pump. This analysis yields the following relation:

$$N_s = \frac{n\sqrt{Q}}{H^{\frac{3}{4}}} \quad \ldots\ldots\ldots (1)$$

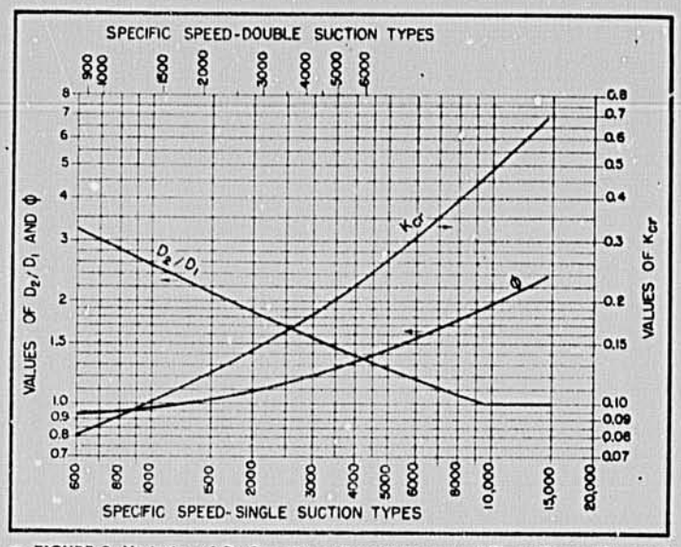

● **FIGURE 3. Variation of D_2/D_1 ratio and constants ϕ and K_{cr} with specific speed.**

where

N_s = Type specific speed
n = Pump speed in revolutions per minute
Q = Capacity at best efficiency in U.S. gallons per minute
H = Head per stage at best efficiency, in feet

For any given impeller, the specific speed does not change with the operating speed, since any change in speed carries with it a change in capacity in direct proportion to the speed and a change in head varying with the square of the speed.

A double suction pump impeller may be considered as two single suction impellers, each of half the width of the double suction impeller and, hence, each handling half the capacity of the latter. On the other hand, the formula for specific speeds remains unchanged regardless of whether a single or a double suction impeller is involved. It is customary, therefore, when listing a definite specific speed, to mention which of the two types of impellers is in question.

Uses of the Specific Speed Concept

One of the most important applications of the specific speed concept is the fact that all sizes of pumps can be indexed by their type specific speed. Thus, for geometrically similar designs, the performance of any impeller of the series can be predicted from the knowledge of the performance of any other impeller of the series. Because the physical characteristics and the general outline of impeller profiles are intimately connected to their type specific speeds, the value of the latter can immediately evoke in the mind of the designer the approximate impeller shape in question. As an illustration of this statement, Fig. 1 shows a few typical single suction impeller outlines tied down to their specific speeds.

The specific speed of a given pump will also reflect very definitely in the shape of the pump characteristic curves. While some variations in the shape of these curves can be obtained by changes in the design of the impeller and casing waterways, the variations which can be obtained without adversely affecting the pump efficiency are relatively small. Approximate

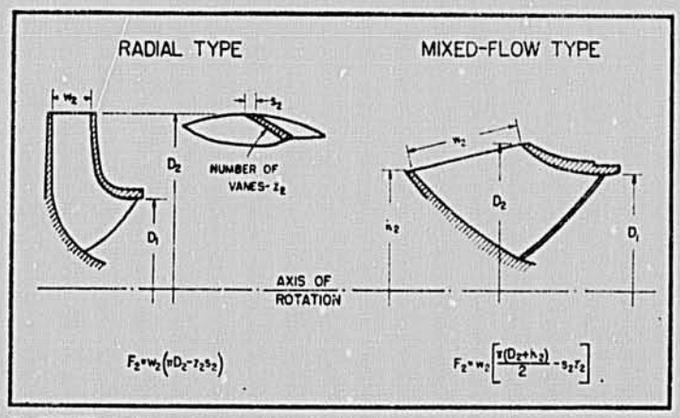

● **FIGURE 2. Dimensional symbols for impellers and formulas for the area F_2.**

characteristics for the impeller types shown on Fig. 1 are illustrated over their specific speeds.

Approximate Specific Speed Type From Impeller Outline

Prior to the general use of specific speed as a type index, the ratio between the impeller outside diameter (D_2) and the suction eye diameter (D_1) was frequently used for that purpose. (See Fig. 2 for symbols of impeller dimensions used in this article). An approximate relation between the D_2/D_1 ratio and the specific speed of single suction impellers is shown on Fig. 3. A double-suction impeller will have a type characteristic approximating that of a single-suction impeller having a specific speed of 70.7 percent (that is $1/\sqrt{2}$) of that of the double-suction impeller.

It should be noted that this method of identifying the specific speed from the D_2/D_1 ratio fails for axial flow impellers which fall in a 9000 to 20,000 specific speed range. Their output and hence their specific speed depends on the angle and length of the vanes as well as the number of vanes. To predict the characteristics of axial flow impellers, one would require very detailed information on the impeller and other pump parts. As a result, no simplified guide can be offered for general use for this type of pump.

Head and Capacity Constants

There are two design constants which can be used in approximating the performance of a centrifugal pump. One expresses the relation between the impeller peripheral speed and the total head. The second relates the radial discharge velocity from the impeller (and hence, the capacity) and the total head. The formulas for these constants are:

$$\varphi = \frac{u_2}{\sqrt{2gH}} \quad \text{.....(2)}$$

and

$$Kcr = \frac{c_2}{\sqrt{2gH}} \quad \text{.....(3)}$$

where:

u_2 = Peripheral velocity in feet per second

c_2 = Radial discharge velocity in feet per second

H = Total head (per stage) in feet

Let us then convert these relations in terms of impeller dimensions which we can measure.

u_2 = Dia. in ft. x Rev./sec. x 3.1416

$c_2 = \dfrac{\text{Capacity in cu. ft./sec.}}{\text{Area in sq. ft.}}$

If

D_2 = Outside dia. of impeller in ins.

F_2 = Discharge area of impeller in square inches (See Fig. 2)

Then:

$$u_2 = \frac{D_2 \times n \times 3.1416}{12 \times 60} = \frac{D_2 \times n}{229} \quad \text{.....(4)}$$

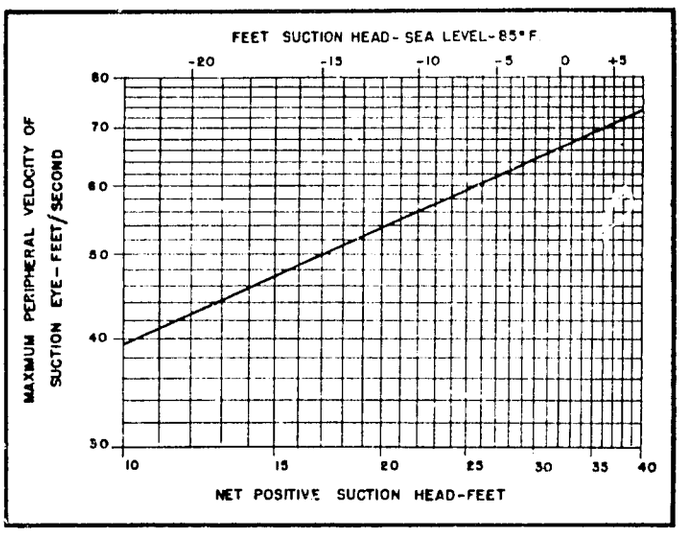

● **FIGURE 4. Approximate limit for peripheral velocity at suction eye vs NPSH.**

and

$$c_2 = \frac{Q \times 144}{7.48 \times 60 \times F_2} = \frac{Q}{3.117\, F_2} \quad \text{.....(5)}$$

We can now replace equations (2) and (3) by

$$\varphi = \frac{D_2 \times n}{229\sqrt{2gH}} = \frac{D_2 \times n}{1840\sqrt{H}} \quad \text{.....(2a)}$$

and

$$Kcr = \frac{Q}{3.117\, F_2 \sqrt{2gH}} = \frac{Q}{25\, F_2 \sqrt{H}} \quad \text{.....(3a)}$$

We can further transform these equations to give us head and capacity values directly:

$$H = \left(\frac{D_2\, n}{1840\, \varphi}\right) \quad \text{.....(2b)}$$

and

$$Q = 25\, Kcr\, F_2 \sqrt{H} \quad \text{.....(3b)}$$

Both φ and K_{cr} vary with the specific speed type and, to some extent, with the individual impeller and casing design. The relation between φ and N_s and between K_{cr} and N_s representative of a normal design of pumps is shown on Fig. 3. As in the case of the D_2/D_1 vs N_s curve, these curves show average values and the actual values for an individual design can be expected to vary somewhat from the values shown on Fig. 3.

Maximum Speed Limitation

Present day practice in the U.S. places a limit on pump speed by limiting the maximum specific speed type for any combination of total head and suction conditions. Before the widespread use of the specific speed concept, the maximum rotative speed of an impeller was often determined by limiting the peripheral velocity of its suction eye (D_1) to a certain value, depending on the suction conditions. This velocity can be established exactly as in the case of the peripheral velocity of the outside impeller diameter in Equation (4). Thus:

Suction eye velocity =

$$\frac{D_1 \times n}{229} \quad \text{.....(6)}$$

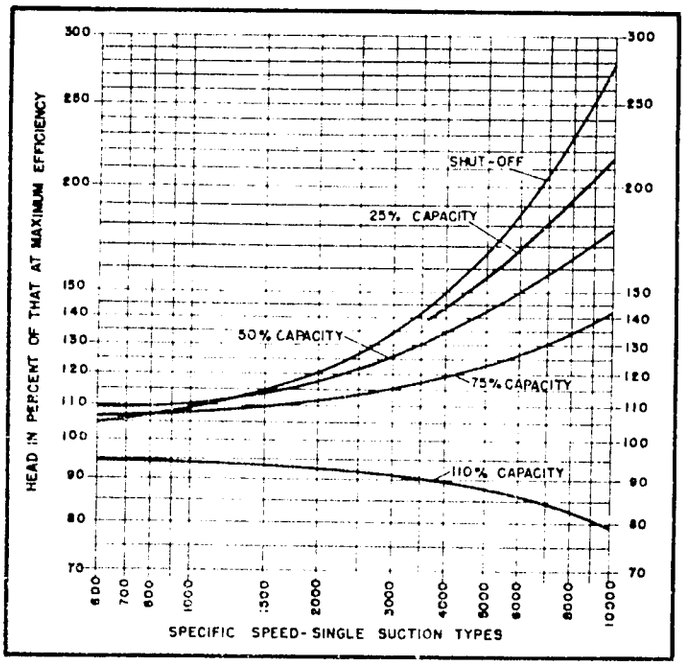

● FIGURE 5. Chart showing normal variations in head values with specific speed.

A reasonable maximum peripheral velocity for the suction eye is shown on Fig. 4 for various suction conditions.

Expected Power Consumption

Determining the possible head and capacity of a pump would be of little value in applying this pump, if the power required to drive it could not be predicted. Fig. 1 shows the approximate maximum efficiency for both single- and double-suction pumps that can be obtained with present day designs. How close an existing pump would approach these values would depend on the individual pump. Expecting anything between 80 and 100 percent of the efficiencies shown on Fig. 1 might be reasonable if the pump is not over 30 years old and of the single stage type. Multistage pumps, with abrupt cross-over passages from one stage to the next should be expected to be less efficient by two to three points of efficiency.

Shape of Head-Capacity and Power-Capacity Curves

Once the head, capacity and power consumption of a pump at a given speed have been established for the best efficiency point, it remains to approximate the curves relating the head and power to the capacity over the entire pump operating range. We have already seen that the shape of these curves is affected by the type specific speed of the pump. Three curves have been prepared to permit the construction of these curves. Fig. 5 shows the variation of head with specific speed for shut-off, 25, 50, 75 and 110 percent capacity. Fig. 6 shows the variation of power with specific speed for the same capacities. Fig. 7 shows the effect of specific speed on the efficiency at 25, 50, 75 and 110 percent of rated capacity. The values shown on Figs. 5, 6 and 7 represent more or less normal impeller-casing designs and combinations.

The variation in the shape of the characteristics between a single-suction impeller with shaft through the eye and an overhung single-suction impeller is negligible. Thus, data from Figs. 5 to 7 can be applied to either type. We have already stated that a double-suction impeller will have a type characteristic approximating that of a single-suction impeller having a specific speed 70.7 percent of that of the double-suction impeller.

Safe Power Input

The shaft of a centrifugal pump is subject to both bending and torsional stresses. Usually, its smallest diameter is at the coupling and this section is subjected primarily to torsional stress only. Generally, centrifugal pump shafts are designed not to exceed a torsional stress at the coupling of 7,000 pounds per square inch for safe maximum continuous loading. Therefore, in predicting pump performance, one should check to see if the maximum expected power at the selected speed keeps the torsional stress within the recommended 7,000 psi limit. If not, the pump is not mechanically safe for operation at the selected speed. The

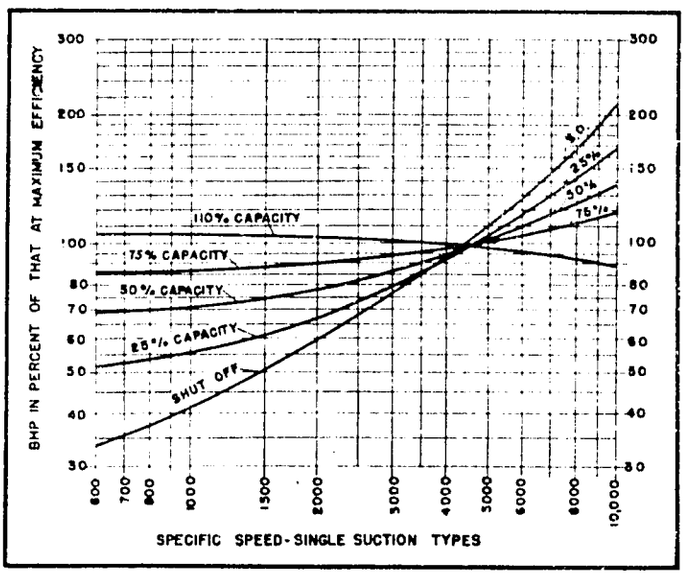

● FIGURE 6. Variation of power values and specific speed for selected capacities.

relation between transmitted HP, speed, shaft diameter and permissible torsional stress is given by the well-known relation

$$HP = \frac{S \times n \times d^3}{321{,}000} \quad \ldots (7)$$

where

S = Permissible stress in psi
d = Shaft diameter at coupling in inches

Safe Operating Pressure

To determine the safe operating pressure of a given pump would require a very detailed study. Some idea of a possible maximum can be obtained by examining the size and drilling of the discharge nozzle flange. This is somewhat of an indefinite limit, especially in the U.S. where the so-called 125 flange which is good up to 175 psi hydraulic operating pressure is generally used for all pressures below that value. Many pump designs using such flanges are not good for operating pressures that high.

A more satisfactory check of safe operating pressures is the bolting of the casing or casing heads. In actual design studies, maximum safe bolt stresses are calculated with full knowledge of the areas subjected to internal pressures, of the maximum expected hydraulic pressure and of the forces required to compress joint gaskets. A good approximation can be obtained by limiting the bolting stress at the root of the threads to 5,000 psi. Thus:

Safe working pressure in psi =

$$\frac{5{,}000 \times A_r \times \text{Number of bolts}}{\text{Area subjected to hydraulic pressure in sq. inches}} \quad \ldots (8)$$

where

A_r = Root area of bolt in sq. inches

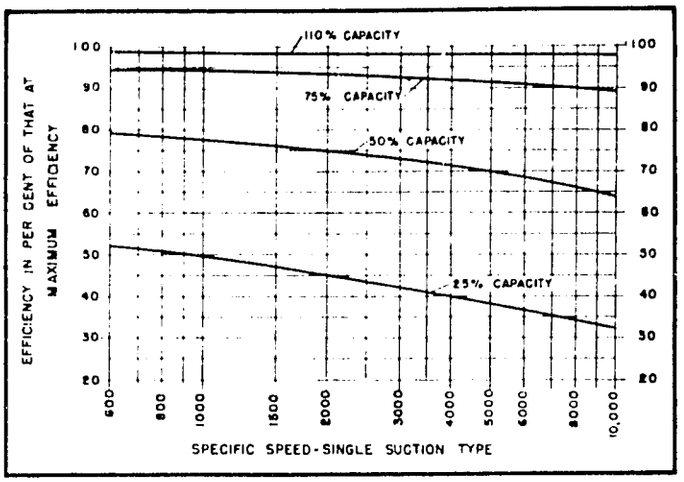

● **FIGURE 7. Relationship between efficiency values and specific speed types.**

Applying the Methods to a Typical Pump

Let us assume that we are analyzing a modern double-suction, single stage centrifugal pump with an 8″ discharge and 10″ suction, both having 125 pound flanges. Various relevant dimensions are given below:

Impeller

$D_2 = 12\frac{1}{4}''$
$D_1 = 6\frac{1}{8}''$
$w_2 = 2\ 1/16''$
$z_2 = 7$
$s_2 = \frac{3}{8}''$

The shaft diameter is 1-9/16″ at the coupling, increasing to a maximum at the impeller. The area of the horizontal split is 200 sq. inches. The pump casing is held together by 21 $\frac{3}{4}''$ studs and bolts. The intended drive is a 60 cycle induction motor.

$$D_2/D_1 = 12.25/6.125 = 2.0$$

Referring to Fig. 3, a D_2/D_1 ratio of 2.0 indicates an impeller type with specific speed $N_s = 1{,}700$ if single-suction or $N_s = 2{,}400$ if double-suction. The head and capacity constants are:

$$\varphi = 1.06$$
$$K_{cr} = 0.13$$

Assuming that the pump will be applied to an installation involving 15 feet suction lift at sea level, handling cold water, the NPSH (net positive suction head) will be, roughly, 17 feet. From Fig. 4, we can establish that the maximum safe peripheral velocity at the impeller suction eye is about 50 feet per second. Solving for the rotative speed in equation (6), we get:

$$n = \frac{50 \times 229}{6.125} = 1860 \text{ RPM.}$$

Therefore, 1750 RPM will be the maximum possible rotative speed with a 60 cycle motor.

Using equation (2b), we can calculate the pump head at 1750 RPM:

$$H = \left(\frac{12.25 \times 1750}{1840 \times 1.06}\right)^2 = 120.5 \text{ feet}$$

Using the formula on Fig. 2, we can calculate F_2, the discharge area of the impeller:

$$F_2 = 2.0625\ (3.1416 \times 12.25 - 7 \times 0.375)$$
$$= 74.2 \text{ sq. inches}$$

Now, we are ready to use Equation (3b) to estimate the pump capacity:

$$Q = 25 \times 0.13 \times 74.2 \times \sqrt{120.5} = 2650 \text{ GPM}$$

We can therefore expect that, when operated at 1750 RPM, this pump will deliver 2650 GPM against a total head of 120.5 feet at its best efficiency point. We can recalculate its specific speed, N_s, from equation (1):

$$N_s = \frac{1750\sqrt{2650}}{(120.5)^{\frac{3}{4}}}$$
$$= 2480, \text{ double suction.}$$

From Fig. 1, we would expect that, for this specific speed and capacity, the maximum efficiency would be somewhat above 85 percent. If we were to use 85 percent, the power consumption would be

$$HP = \frac{2650 \times 120.5}{3960 \times 0.85} = 95$$

Working from these values of capacity, head, efficiency and horsepower and using the percentages shown on Figs. 5, 6 and 7 (for a single-suction N_s of 2480 x 0.707 = 1743) we can obtain the points listed in Table 1 (next page).

Plotting these points, we obtain the approximate curve shown on

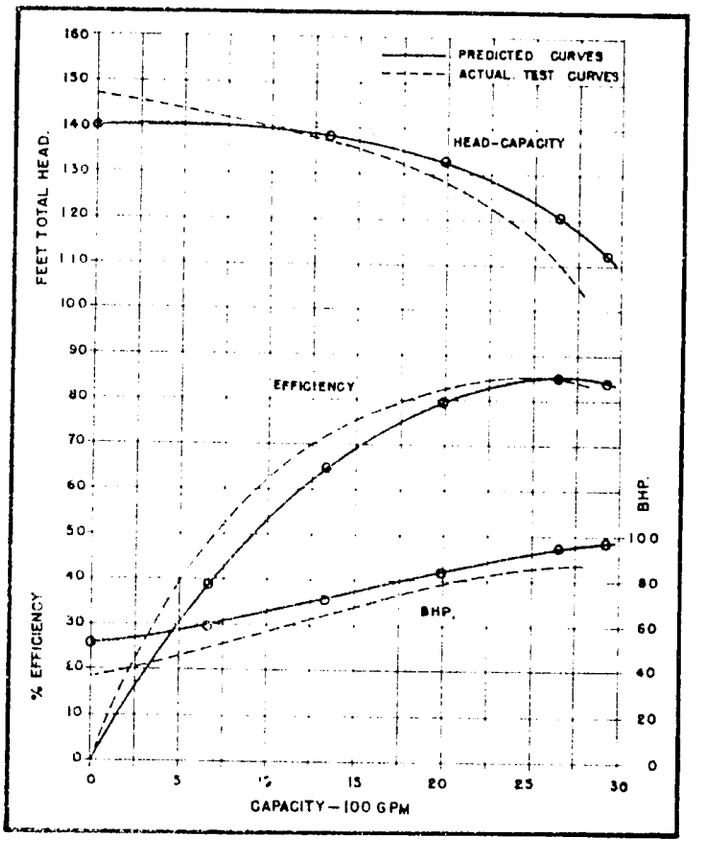

● **FIGURE 8. Comparison of the pump characteristics predicted from impeller dimensions and the actual characteristics determined by test shows close agreement.**

Table 1—Approximate Points on Capacity, Head, Efficiency and Horsepower Curves

Capacity in		*Head in*		*Power*		*Efficiency*	
%	*GPM*	*%*	*Feet*	*%*	*BHP*	*% Max.*	*Actual*
0	0	116.5	140	54	51.2	0	0
25	662			62.5	59.4	45.7	38.8
50	1325	115	138	75	71.2	75.6	64.3
75	1987	110	132.5	88	83.6	93.8	79.6
100	2650	100	120.5	100	95	100	85
110	2915	93	112	103	97.8	99	84

Fig. 8. The actual test curve of the pump has been superimposed on the same graph for comparison.

Using equation (7) we can determine whether the pump shaft is suitable for this application:

$$\text{Safe HP} = \frac{7000 \times 1750 \times 1.562^3}{321{,}000} = 145$$

The shaft is obviously safe for 1750 RPM operation.

It remains to check the pump for the safe operating pressure. The ¾" bolts and studs holding the two halves of the casing together have an area of 0.302 sq. inches at the root of the threads. Applying equation (8), we get:

$$\text{Safe working pressure} = \frac{5000 \times 0.302 \times 21}{200} = 158.5 \text{ psi}$$

This is about 2.6 times the expected shut-off head of 140/2.31 or 60.5 psi, when operating at 1750 RPM. It appears that the casing will be amply strong for the intended operation.

Conclusion

The foregoing example has demonstrated that it is possible to approximate the performance of centrifugal pumps other than those of the axial flow impeller type. Nevertheless, this should be resorted to only in the absence of a more reliable method and certainly should be used with caution.

● ● ●

EDITOR'S NOTES

In using this paper the following conversion constants may be useful:

1 U.S. gallon per minute (G.P.M.) = 1.20 U.K. gallons per minute
= 3.78 liters per minute
1 cubic foot per second (cu.ft./sec.) = 28.32 liters per second
1 foot (ft.) = 12 inches (in.) = 0.305 meter
1 foot per second (ft./sec.) = 0.305 meter per second
1 pound per square inch (psi) = 0.0703 kilogram per square centimeter
1 horsepower (HP) = 33,000 foot-pounds per minute
= 0.7457 kilowatt
= 76.04 meter-kilograms per second
= 1.014 cheval-vapeur (75 meter-kilograms per second)

In computing power consumption in the example problem, the following formula was used:

$$\text{horsepower (HP)} = \frac{\text{U.S. gallons per minute} \times \text{head in feet}}{3960 \times \text{efficiency}}$$

Public Works is published by the Public Works Journal Corp., 200 South Broad Street, Ridgewood, N. J., U.S.A.

Further information on centrifugal pumps may be found in Centrifugal Pumps; Selection, Operation, and Maintenance, by Igor Karassik and Roy Carter, McGraw-Hill Book Company, 330 West 42nd Street, New York, N. Y., 10036, U.S.A.

WATER SUPPLY AND SANITATION IN DEVELOPING COUNTRIES

AGENCY FOR INTERNATIONAL DEVELOPMENT

UNIVERSITY OF NORTH CAROLINA

FREDERICK E. MCJUNKIN, EDITOR

March 1967

AID-UNC/IPSED Series Item No. 12

USE OF ALUM-CAKE IN WATER TREATMENT

ABSTRACT

Construction and operation of a device for feeding alum solution, prepared from alum-cake (alum in large lumps or blocks), in a water treatment plant is described. The feeder consists essentially of a wooden tower or bin for storage of alum-cake. An overhead spray spreads water over the top of the tower. As water trickles down through the tower, the lumps of alum are dissolved and an alum solution discharged at the base of the tower. The feeder may be assembled at the plant, using local materials and labor, and requires no mechanical equipment other than weighing scales and flowmeters. A low-grade, unpurified, unground alum may be used. The system described has been successfully operated since 1959 in Santiago, Chile at the Las Vizcachas Water Treatment Plant, a rapid sand filter plant treating up to 6 cubic meters per second (137 million gallons per day). Similar feeders have also been used in small plants.

(Key words: alum, feeders, coagulation, water treatment)

Source of Information

This item was prepared from information supplied by Luis Pivet P., Ingeniero Administrador, Planta de Filtros Las Vizcachas, Empresa de Agua Potable de Santiago, Chile. Ing. Raimundo Hederra, Servicio Nacional de Salud, Santiago, assisted the editor in translating correspondence, technical papers, and drawings.

Introduction

Coagulation as an aid for water clarification has been practiced from ancient times for household supplied and almost a century for municipal supplies. The most widely used coagulating agent is aluminum sulfate, commonly known as alum, filter alum, or sulfate of alumina.

Alum is commercially produced in dry form and as a solution. Dry alum is generally measured by volume or weight and dissolved in water prior to introduction into the main plant stream. A great variety of manufactured equipment is available for continuous addition of alum.

[illegible]

Liquid alum may be obtainable in some areas, especially near large paper mills. At the source, it costs less than dry alum; however, the increased shipping weight (double or more) due to added water limits its widespread use. Also, liquid alum is highly corrosive and requires special shipping containers.

A method using locally produced unground alum in cake form has been developed and used successfully since 1959 in Santiago, Chile, at the Las Vizcachas Water Treatment Plant. The initial cost is relatively small and little mechanical equipment or maintenance is required. In this method, broken pieces of alum-cake are placed in a wooden tower or bin similar to that shown in Figure 12.1. Water is sprayed from the top of the tower over the alum. As the water passes down over the cakes, alum is dissolved and the alum-water solution falls through the base of the tower and flows to the selected discharge line as shown in Figure 12.2.

The Las Vizcachas Plant treats up to six cubic meters per second (m^3/sec) of water with a turbidity between 10 parts per million (ppm) and 30,000 ppm (exceptionally 200,000 ppm), with an annual average of from 30 to 1200 ppm. The plant has two flocculation stages. The primary stage has two towers with a combined capacity of 1,300 kilograms of alum-cake per hour; the secondary flocculation stage has a tower with capacity to dissolve 300 kilograms of alum-cake per hour. Approximately 80 ppm of alum-cake can be added to plant flow at full capacity.

The same dosing system will be used in the New Vizcachas Plant (capacity: 9 m^3/sec). Several smaller plants (0.1 - 0.2 m^3/sec) in Chile have also adopted this system.

Alum-Cake

Alum-cake used in Chile is the reaction product of sulfuric acid and kaolin, a clay rich in hydrous silicate of aluminum ($Al_2Si_2O_5(OH)_4$). Its characteristics are shown in Table 12.1.

TABLE 12.1

Alum-Cake ($Al_2(SO_4)_3 \cdot nH_2O$) Used at Las Vizcachas Filter Plant

		Per Cent
Soluble as Al_2O_3		16 %
Soluble Fe_2O_3		0.5%
Free H_2SO_4	less than	0.1%
Insolubles*		20 %

*Includes silica, unattacked kaolin, and other silicates

The alum emerges from the reactor, or digester, as a hot liquor. Dry alum is produced by evaporating water from the digester liquor to a strength of 16% Al_2O_3. (The desired strength may vary.) The evaporated liquor is then cooled in pans to form alum-cake, and broken into lumps of some 10 to 30 kilograms each. (See Figure 12.3.) If lumps cannot be used directly, then the alum-cake must be crushed and ground to the desired screen size.

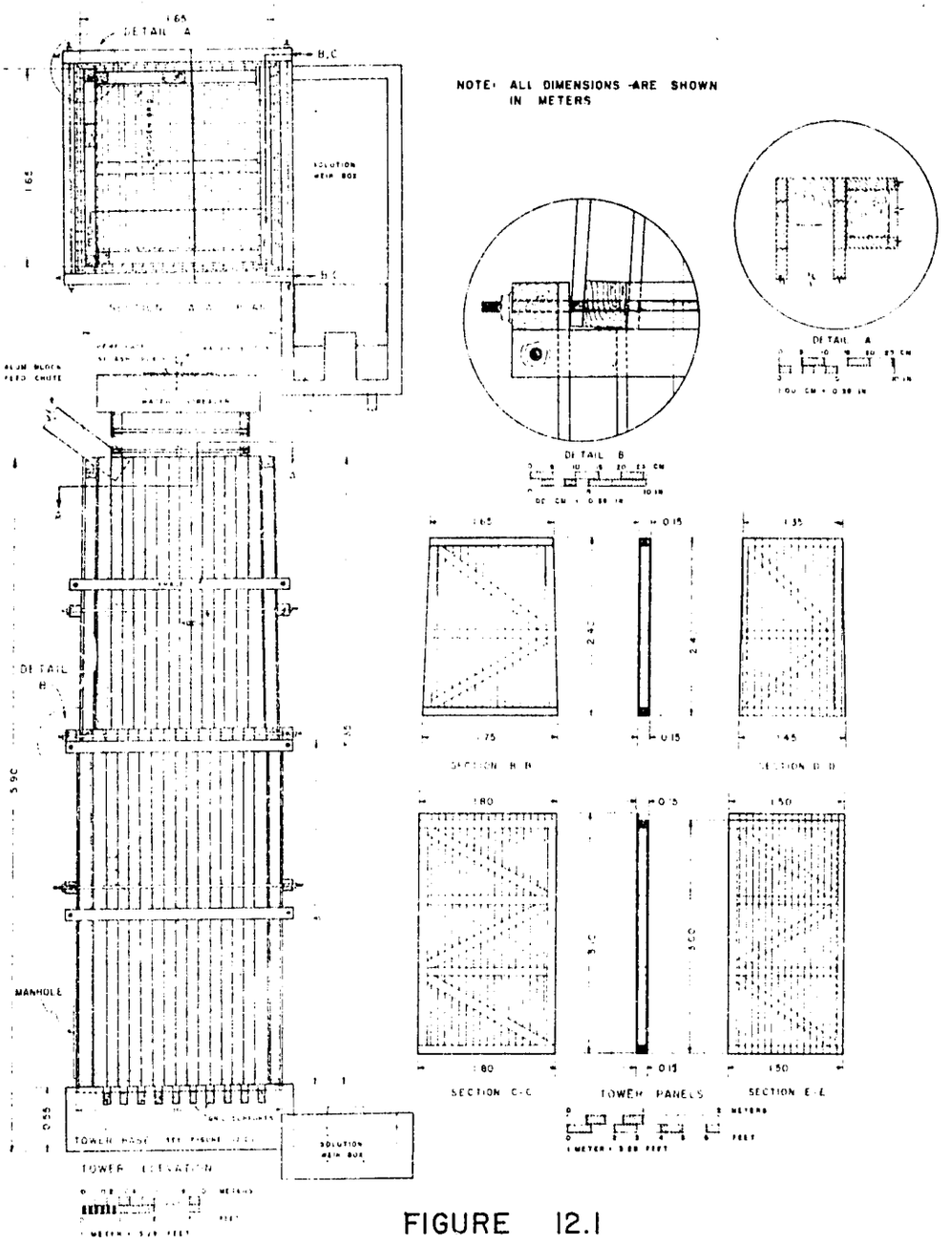

FIGURE 12.1

DETAILS OF WOODEN DOSING TOWER

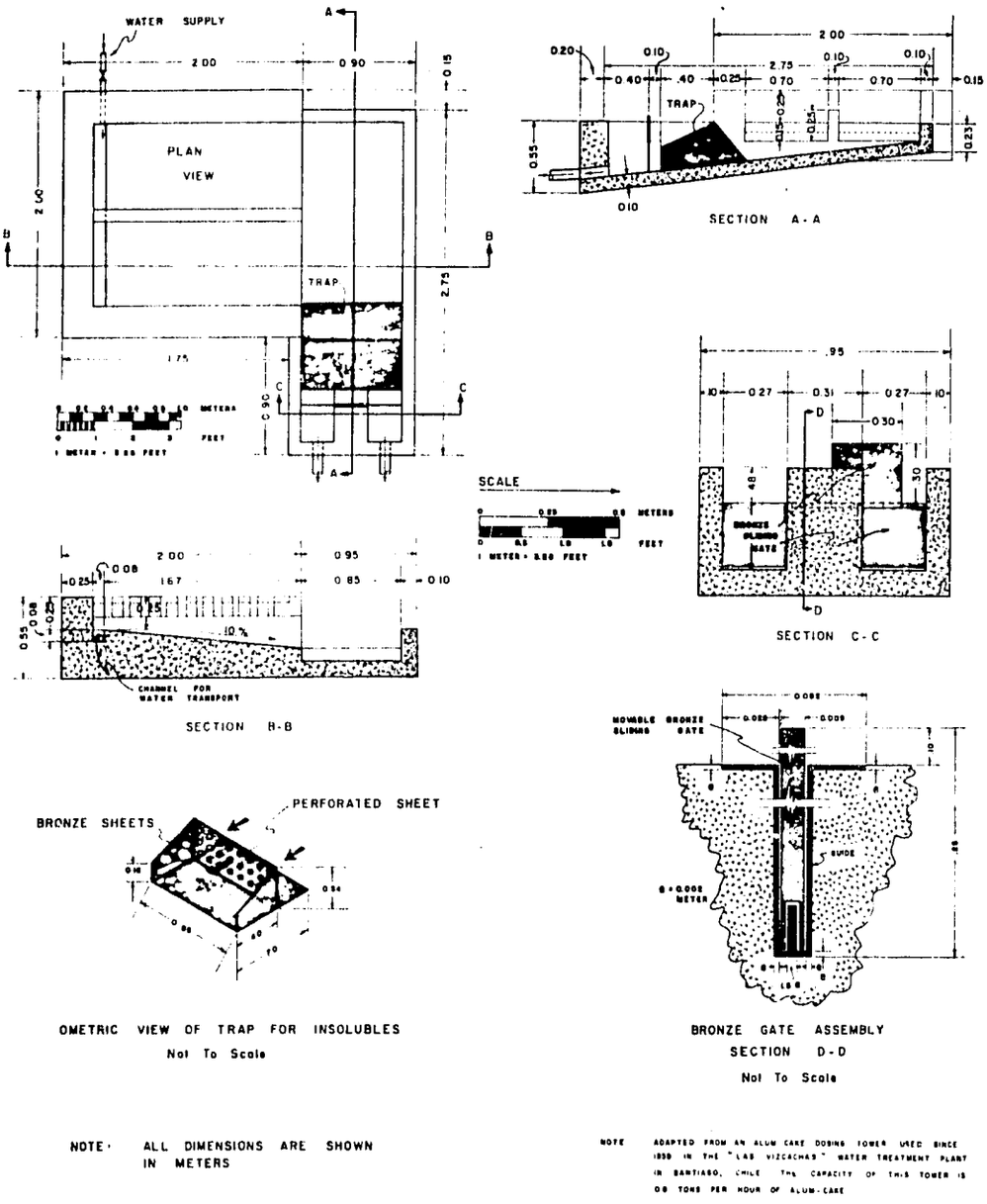

NOTE: ALL DIMENSIONS ARE SHOWN IN METERS

NOTE: ADAPTED FROM AN ALUM CAKE DOSING TOWER USED SINCE 1939 IN THE "LAS VIZCACHAS" WATER TREATMENT PLANT IN SANTIAGO, CHILE. THE CAPACITY OF THIS TOWER IS 0.8 TONS PER HOUR OF ALUM-CAKE

FIGURE 12.2

DETAILS OF TOWER BASE AND WEIRS

Mechanical hardness of the cake is closely related to the content of water of crystalization and of Al_2O_3, being hardest when the content of Al_2O_3 is greatest and water of crystalization least. The tendency of Chilean industry has been to produce higher alum product (16% Al_2O_3), which has the advantage of lessening weight and storage, but has resulted in a hard, difficult to dissolve alum. At Las Vizcachas, increasing Al_2O_3 content from 11% to 16% more than doubles the time necessary to dissolve a given quantity.

Design of the Dosing Towers

Prior to construction of the towers alum dissolution was studied experimentally by means of gravity water flow through a hollow column full of lumped alum-cake. Such a system was used in one local industry (Fábricas Arteaga) for preparation of concentrated aluminum sulfate solution and in another (Compañía Manufacturera de Papeles y Cartones) as a dosing system but the necessary reliability and precision of dosage necessary for treatment of a public water supply had not been proven. An experimental program was conducted to determine the quantity of alum cake which could be dissolved per unit of time. Observations indicated that the maximum quantity that could be dissolved corresponded to an alum-cake detention time in the tower of four hours under critical conditions - the hardest alum-cake, cold weather, and low temperature water of dissolution. That is, storage within the tower of more than a four-hour supply of alum-cake did not result in an increase in the quantity of alum-cake dissolved. Thus more than four hours detention at peak demand is neither necessary nor economically desirable. The bulk density of alum-cake placed in the tower is approximately 0.7 ton per cubic meter. Thus for a maximum dissolution capacity of 0.5 tons per hour of alum-cake, minimum tower volume would be:

$$\frac{\text{(Rate of Weight Added) (Time)}}{\text{(Bulk Density)}} = \frac{\text{(Weight)}}{\text{(Bulk Density)}} = \text{(Volume)} \quad \ldots\ldots\ldots\ldots (12.1)$$

$$\frac{(0.5\ \text{ton/hr})\ (4\ \text{hr})}{(0.7\ \text{ton/m}^3)} = \frac{(2\ \text{tons})}{(0.7\ \text{ton/m}^3)} = (2.86\text{m}^3) \quad \ldots\ldots\ldots\ldots (12.2)$$

Also, to insure that the solution discharged from the bottom of the tower is of constant strength, the minimum tower height should be three meters. For a given rate of solution flow, concentration of solution at the base of the tower was found to be practically independent of alum-cake height for heights greater than three meters. The horizontal section of the tower would then be:

$$\text{(Area)} = \frac{\text{(Volume)}}{\text{(Height)}} = \frac{(2.86\text{m}^3)}{(3\text{m})} = 0.95\ \text{m}^2 \quad \ldots\ldots\ldots\ldots (12.3)$$

Tower dimensions for other capacities are similarly obtained.

The towers are built with square horizontal section. Each side is made of a double walled panel; interior walls are of poplar panels of 2.5 cm thickness, and exterior walls are of flooring oak. Panels are evenly separated by 5cm x 10cm spacer strips with both panels nailed to the strips. Interior nails are protected by nailing them deep (counter-sinking) into the panels and filling the resulting holes with tar. On erection of the tower, the four double-walled panels are supported with 5/8-inch (1.7cm) diameter steel rods surrounding the perimeter of the tower section. Microbial destruction of the wood is arrested by the acidity of aluminum sulfate, so that poplar is a satisfactory material. A grate or grid placed at the bottom of the tower supports the weight of the column of the column of alum-cake. The grate is made of 5cm x 10 cm oak bars initially placed 2.5 centimeters apart. However, foreign materials in the alum-cake at first obstructed the grate but this difficulty was solved by eliminating alternate wooden bars thereby widening separation between bars to ten centimeters. The greater separation did not increase the discharge rate from the tower nor did the regularity of discharge vary. A side cover or manhole was put on the lower part of the tower for access to the grate. Foreign materials are removed from the grate at least once a year.

Descent of alum-cake through the tower is accompanied not only by dissolution of the outer portion of each lump but also by progressive hydration of the lump, an exothermic process accompanied by an increase in volume. Especially for finely broken alum-cake, this can lead to obstruction of the tower forming a practically immovable mass. To avoid this difficulty, the upper half of the tower is built in the form of a truncated pyramid with a thirty to one (30:1) slope on the sidewalls.

In Figure 12.3 can be seen a photograph of the upper part of the tower showing how dissolution water falls over a wooden grid, distributing the water as a shower over the top of the tower. This water is fed from a constant level water tank above the tower, attached to the top of an elevator frame. This can also be seen in the photograph. Rotameters are used for measuring flow of dissolution water.

Operation and Maintenance

After the alum-cake has remained in the tower 4 to 8 hours, the lumps are practically disintegrated. Insolubles in the lower part of the tower increase at first but eventually reach an equilibrium concentration. The lower contents of the tower are transformed into a plastic mass or paste that regulates tower operation by insuring alum-cake solution homogeneity. This plastic mass also helps support the weight of the tower contents, preventing the tower from emptying through the openings of the bottom grate.

The effect on tower operation of the insolubles in the alum-cake used at Las Vizcachas is important. Use of alum-cake of a different composition* may require adjustment in spacing of bars of the bottom grate, wall slopes, detention times, and other design factors.

Insoluble material is not extracted or removed but is added (in suspension) to the raw water. At Las Vizcachas, one kilogram (kg) of alum settles 100 kg of mud. Thus the addition of 0.2 kg of insolubles per kilogram of alum-cake is a negligible problem.

The level of alum-cake is always maintained within one meter of the top of the tower. This requires reloading intervals of one to four hours. An elevator is used in loading the large towers (see Figure 12.3). The weight of alum-cake added is recorded and a parallel hourly register of dissolution water is maintained. The total alum-cake added in a certain period (8 to 24 hours) is divided by the weight of water added to determine the parts per million of alum-cake dosage. An experimental graph of hourly flow of dissolution water versus hourly alum dissolved is helpful in plant operation. At Las Vizcachas, one liter of water dissolves one kilogram of alum-cake, giving two kilograms of solution with a good order of precision. Two volumes of water dissolve twice as much alum-cake.

Maintenance cost of this equipment is minimum; neither complex replacement parts nor skilled labor are required. The only need is to clean the tower at least once a year, removing by the manhole or hatchway those materials left over the bottom grate. Experience at Las Vizcachas has been that the annual sum of all interruptions is about 70 hours per year. Primary and secondary dosing towers have never been out of service at the same time. The range of dosage for the largest of the existing columns has been from 15 to 750 kilograms per hour, a range of from 1 to 50. Change in dosage is accomplished in a few minutes by adjusting the flow of dissolution water.

The worker formerly needed for preparation of alum-cake solution is no longer required. All corrosion problems in equipment due to aluminum sulfate and its acidity were eliminated by arranging the towers to discharge alum solution directly to the water to be treated.

The service life of the feeders, without replacement, has been about seven years.

*For example, alum meeting the American Water Works Association Standard for Aluminum Sulfate (AWWA B403-64) may have not more than 10 per cent insolubles in unpurified, or 0.5 per cent insolubles in purified lump or ground alum.

A General View

Loading a Small Tower
(Note Alum. Cake at Rear)

Rapid Mixing with Hydraulic Jump

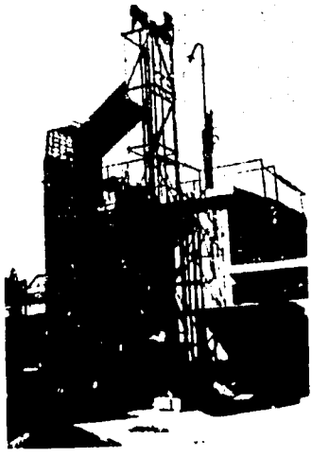

Two Dosing Towers with Loading Elevator

Top of a Tower

Baffled Mixing Basins

Base of a Tower

FIGURE 12.3

LAS VIZHACHAS WATER TREATMENT PLANT

Experience of Others

An upflow alum-cake solution feeder is under study by the Facultad de Ingeniería de Sanitaria of the Universidad Nacional Ingeniería in Lima, Peru. A sketch of their laboratory unit is shown in Figure 12.4

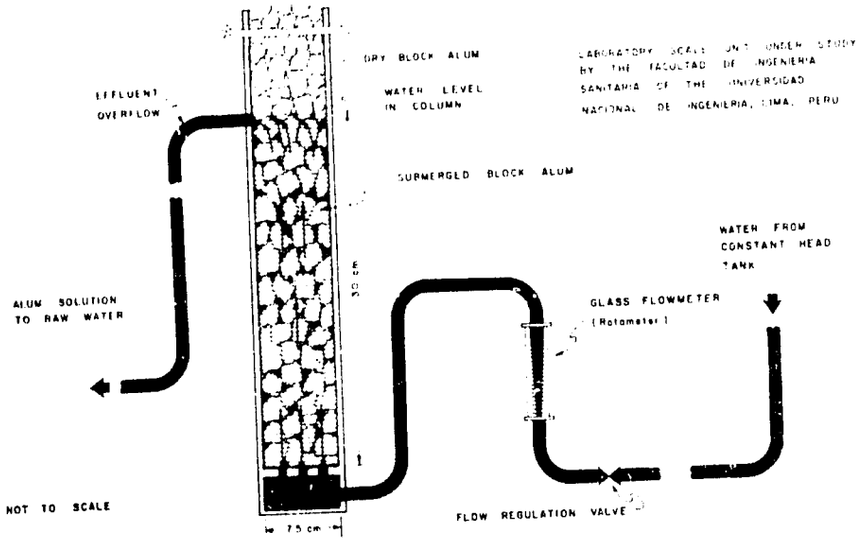

FIGURE 12.4

U.N.I. UPFLOW ALUM-CAKE FEEDER

It is not unlike a "solution pot" feeder, except that it operates with a free water surface in the column. In this unit the influent water dissolves some of the alum as it passes upward to the overflow level. As the submerged alum dissolves, its volume is reduced and dry alum above the overflow level sinks until submerged. Thus, the amount of alum submerged remains constant at any constant rate of inflow and the density (or concentration) of the alum solution discharged is also constant.

Figure 12.5 is a photograph of a small unit near New Delhi, India. This unit illustrates that an alum block solution feeder could be adapted to even the smallest plants.

FIGURE 12.5

SMALL ALUM-CAKE FEEDER IN NEW DELHI

Summary

Depending on local conditions, use of alum-cake solution feeders may offer significant economies in capital investment, operation, and maintenance. The need for importation or investment in complex mechanical equipment is reduced. Furthermore these units are not difficult to maintain and repairs may be made with local materials. Experience with this system in Santiago has proven its reliability. Failure due to human, mechanical, or electrical causes is almost nil. Problems due to corrosion and to obstruction of equipment by insolubles have been minimized. Dosage is readily changed over a wide range.

Another economic advantage is that no expenditure need be made in grinding and screening alum-cake, and a low grade of unpurified alum can be used without detrimental effect.

Reference

Pivet Poblete, Luis, "Dosificación de Alum-Cake en la Planta de Filtros de Las Vizcachas," Ingeniería Sanitaria, Vol. 15, No. 2, 111-119 (October 1961).

Note

Parts per million, or ppm, is always by weight and is simply a convenient method of expressing the concentration represented by the number of pounds of dry solids contained in one million pounds of water, including solids. One part per million may be expressed as 8.345 pounds of dry solids to one million U. S. gallons of water. In the metric system, one part per million may be expressed as one gram of dry solids to one million grams of water, or one milligram per liter.

In arriving at parts per million by means of pounds per million gallons or milligrams per liter, the density of the solution or suspension is neglected. If the density is appreciably different from unity, the results will be slightly in error.

Other relevant conversion factors:

1 cubic meter per second (m^3/sec) = 22.8 million gallons per day (mgd)
1 kilogram (kg) = 2.205 pounds (lb)
1 ton (metric) = 1000 kilograms (kg) = 2205 pounds (lb)
1 meter (m) = 100 centimeters (cm) = 3.281 feet (ft) = 39.37 inches (in)
1 centimer (cm) = 0.3937 inches (in)
1 inch (in) = 2.540 centimeters (cm)

WATER SUPPLY AND SANITATION IN DEVELOPING COUNTRIES

Index To Previous Items

Item No.	Title
1	"Scope of the Publication Series"
2	"Reduction of Water Waste by the Use of Constant-Flow Valves"
3	"Water Supply Using Bamboo Pipe"
4	"Float Valve Hypochlorite Solution Feeder"
5	"A Proportional Chemical Feeder for Small Water Purification Plants"
6	"Individual Household Disinfection and Filter Unit for Turbid Waters"
7	"Floating Platform Hypochlorite Solution Feeder"
8	"V-Notch Constant-Head Solution Feeder"
9	"Floating Bowl Hypochlorite Solution Feeder"
10	"Bottle Hypochlorite Solution Feeders"
11	"Characteristics of the Unknown Pump"

* *

A NOTE FROM THE EDITOR

As said in our very first Item, the success and value of this publication series will depend largely on two-way communication between its editor and its readers. I invite - I request - your comments, suggestions, and, especially, information and material for publication. Penciled notes, letters, sketches, drawings, photographs - the form is not so important as is the idea. English, Spanish, French - the language does not matter. Information can be prepared for publication if the idea is there. Length is not crucial. Ideas from brief notes can be combined for publication, as was done for Item No. 17.

In addition to your own experience, a lead or contact on another engineer's idea may be helpful. Your experience with Items we have previously published will also be helpful, for example, suggested improvements, location of similar installations, etc. Ideas on administration and management are as important as hardware. Eventually an IPSED staff member may be able to visit your country and discuss these ideas directly and perhaps visit your installations.

One other point: the rapid growth of our readership, the problems inherent in mailing to over 100 countries, and our small staff have made mailing of the series somewhat irregular. Also for economy, series mailings must be consolidated. I ask your indulgence.

I hope I will be hearing from you.

WATER SUPPLY AND SANITATION IN DEVELOPING COUNTRIES

AGENCY FOR INTERNATIONAL DEVELOPMENT — UNIVERSITY OF NORTH CAROLINA

FREDERICK E. MCJUNKIN, EDITOR

April 1966 — AID-UNC/IPSED Series Item No. 13

THE ELBOW METER FOR MEASURING THE FLOW RATE OF WATER IN PIPES

ABSTRACT

The construction and operation of a simple meter for measuring the rate of flow of water in pipes is described. The meter may be constructed using an existing pipe elbow and a simple manometer. The accuracy of the meter is within 2 percent when calibrated in place, but calibration is not necessary if some accuracy can be sacrificed.

(Key words: flowmeters, manometers, water measurement, water meters)

Source of Information

This item was prepared by P. Aarne Vesilind, Research Fellow, Department of Environmental Sciences and Engineering, University of North Carolina, in collaboration with the editor.

Introduction

The elbow meter is a simple, readily constructed device for measuring the flow rate of water in piping systems. Any existing pipe elbow may be used as the primary meter. The only other materials required are two taps, some rubber hose, glass tubing, and a meter or yard stick, all of which are widely available. The meter measures the differential pressures created by the centrifugal force of water moving through the elbow. The pressure on the outside of the elbow (H_1) is greater than that on the inside (H_2). This difference in pressure (H_1-H_2) can be readily measured with an airwater manometer as shown in Figure 13-1. The pressure differential is proportional to the square of the flow rate (Q), or in the usual mathematical form:

$$Q = C\sqrt{H_1 - H_2} = C\sqrt{\Delta H} \qquad (13\text{-}1)$$

where C is a constant. Thus the differential pressure (ΔH), which is easily measured, can be used, by calculation, to estimate the rate of flow (Q) through the pipe elbow.

This publication series is prepared by the International Program in Sanitary Engineering Design (IPSED) under the sponsorship of the Community Water Supply Branch, Agency for International Development (AID), United States Department of State. IPSED is a program of the Department of Environmental Sciences and Engineering, School of Public Health, University of North Carolina at Chapel Hill. Correspondence should be addressed to Frederick E. McJunkin, Editor, IPSED, Box 630, Chapel Hill, N.C., 27514, U.S.A. Publications are distributed free of charge to engineers working in developing countries and may be obtained from U.S. missions, U.S.A.I.D. missions, or by writing the University. Material for publication is invited.

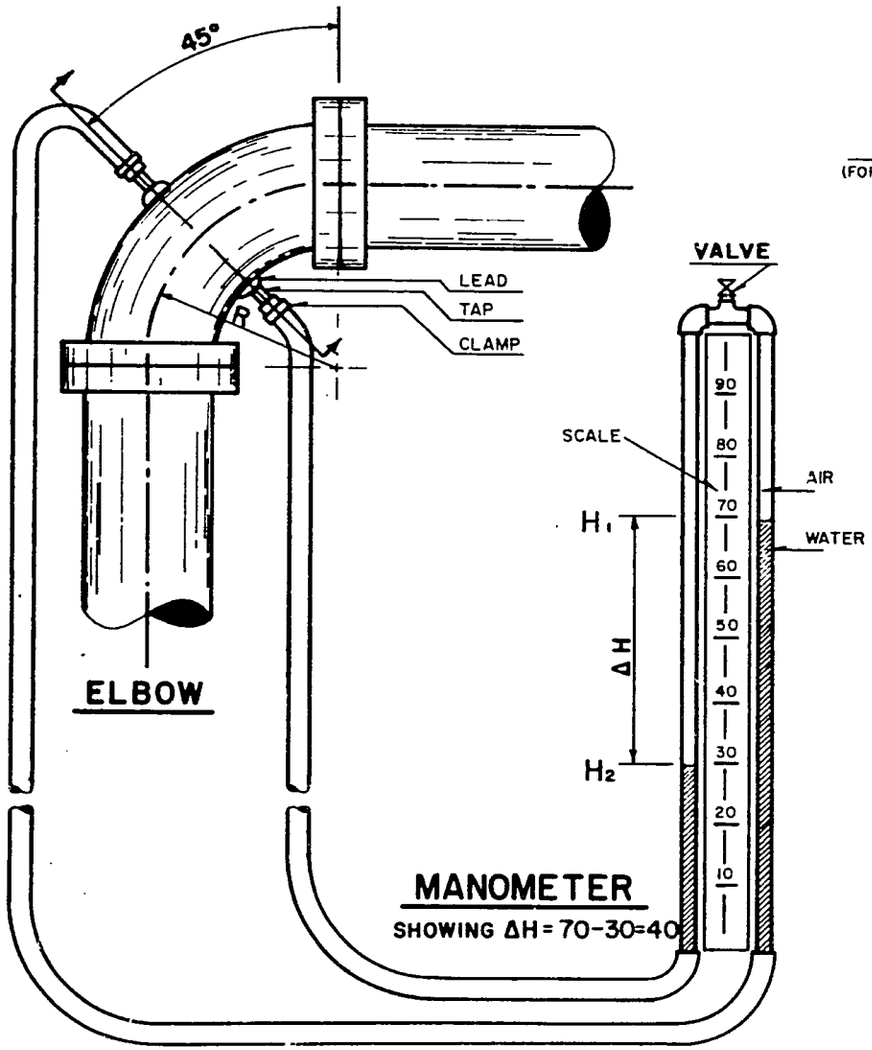

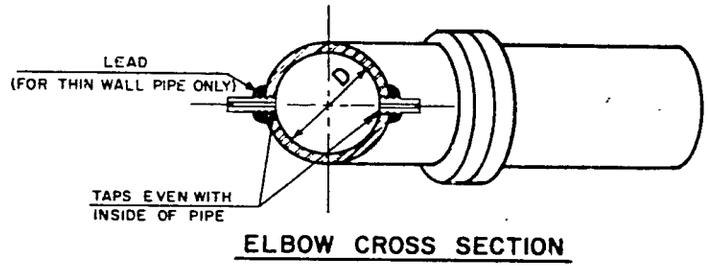

ELBOW METER FOR MEASURING PIPE FLOW

FIGURE 13-1

Construction

The essential elements of construction are shown on Figure 13-1. The taps inserted into the elbow may be of any convenient size. Generally 1/8-th inch (3 millimeter) taps are satisfactory. The taps should be flush and smooth with the inside of the pipe. For cast iron pipes, this should pose no problem. For thinner wall pipes, such as copper or steel, a piece of lead can be soldered to the elbow at the location of the tap and the tap can then be made through the lead and pipe as shown. In this way, the taps are more securely fastened and the possibility of leakage reduced.

If a significant static pressure is present in the pipe, use of clamps on the rubber hoses is advisable. The glass tubes should be at least 3 feet or 1 meter long, and again may be of any convenient diameter. Both of the glass tubes, however, should be of equal diameter to cancel capillary influence.

The scale can be an ordinary meter or yard stick. The glass tubes and the scale should be securely mounted on a wall or board in a vertical position. A small valve should be placed on top of the manometer in order to allow the release of excess air. If static pressures are not too great, a simple rubber hose stub with a clamp may be used for this purpose.

Calibration

Where it is practical and possible to do so, the constant C should be evaluated experimentally. This may be done by allowing the water to flow through the meter at known rates of flow (Q's)* and measuring the resulting differences in pressure (ΔH's) in appropriate units. By plotting Q versus $\sqrt{\Delta H}$ on arithmetic paper the constant C can be determined. The square root of the pressure difference may be obtained by slide rule, tables, or from Figure 13-3. As an example, the data in Table 13-1 is plotted as Figure 13-2.

Table 13-1
Example Flow Data

Q (gallons/minute)	ΔH (inches)	$\sqrt{\Delta H}$ (from Figure 13-3)
0	0	0
450	6	2.4
630	12	3.5
765	18	4.2
990	30	5.5

*One method of estimating the flow is to clock the time to fill a container of known volume while pumping at a constant rate. The rate can then be found by dividing the volume pumped by the time of pumping.

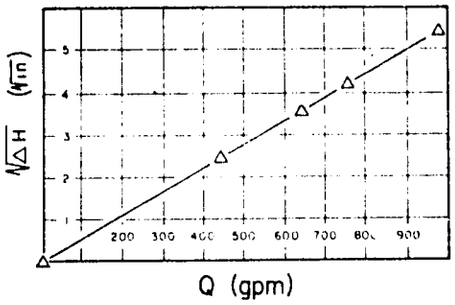

SAMPLE CALIBRATION CURVE

FIGURE 13-2

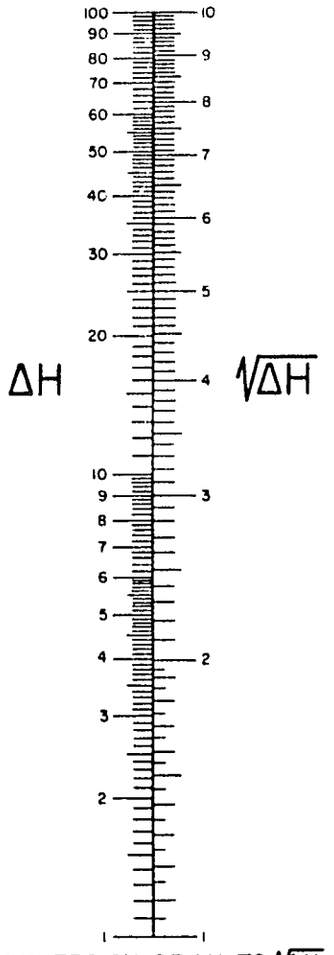

CONVERSION OF ΔH TO $\sqrt{\Delta H}$

FIGURE 13-3

Since by definition, $C = Q \div \sqrt{\Delta H}$, the slope of the line is C. In this example, C = 1000/5.2 = 181. This value can then be used for calculating any rate of flow (Q) for any pressure differential (Δ H), providing the dimensional units for Q and Δ H are not changed. (In the above example, gallons/minute and inches are the dimensional units).

Operation

The rubber hoses should be clamped off just below the manometer and the glass tubes drained of water. The small valve on top of the manometer should be closed and the clamps on the rubber hoses released slowly and simultaneously. The air-water interface on both glass tubes should now be at the same height if no water is flowing in the pipe. The height of the interfaces should be close to the middle of the scale. If they are not, they may be adjusted as follows.

If the interfaces are too low, a small amount of air may be released from the small valve on top of the manometer. This will raise the water level in both tubes. If the interfaces are too high, the rubber hoses should again be clamped but this time further down toward the elbow. The water must then be drained from the manometer and the clamps slowly released as before.

When the two interfaces are both even and close to the middle of the scale, the meter is ready for operation. If the meter is to be calibrated, the procedure in the preceeding section should be followed. If not, the meter is ready for operation.

If the meter has been calibrated, the flow rate (Q) for any manometer reading (Δ H) may be determined either by the use of equation (13-1), using the calculated value of the coefficient (C), or from the calibration curve directly. The rate of flow (Q) may be determined from the calibration curve using the following procedure:

(1) Plot the square root of the manometer reading, i. e., $\sqrt{\Delta H}$, on the vertical axis of the calibration chart,
(2) through this plotted point, draw a line parallel to the horizonal axis, intersecting the calibration curve,
(3) through this point of intersection, draw a vertical line to the bottom of the chart, i. e., the Q-axis.
(4) Read the value of the discharge, Q, where the vertical line intersects the axis.

If it is not possible to calibrate the meter in place by measurement of flow, the nomograph of Figure 13-4 may be used to determine the flow rate (Q) for any manometer reading (ΔH).

In order to use the nomograph, the pipe diameter (D) and the centerline radius of the elbow (R) must be known. It is important to note that the elbow radius is to the center-line of the pipe (see Figure 13-1). A straight line must be drawn from the diameter (D) scale to the radius (R) scale, and the point of intersection with the C line marked. Connecting that point on the C line with the measured pressure differential, scale Δ H, the straight line can be extended to the flow rate scale (Q) which gives the flow rate in either English or metric units. An example is included on Figure 13-4.

It is also possible to use the nomograph to draw a calibration curve similar to Figure 13-2, if the use of a calibration curve is found more convenient. Entering the nomograph with various pressure differentials (Δ H's), the corresponding flow rates (Q's) may be calculated. These values may then be plotted as in Figure 13-2, with $\sqrt{\Delta H}$ versus Q. Once this curve is plotted, the use of the nomograph is no longer necessary and the flow rate may be determined from the calibration curve as discussed above.

$$Q = \pi \frac{D^2}{4}\sqrt{\frac{gR}{D}}\sqrt{\Delta H}$$

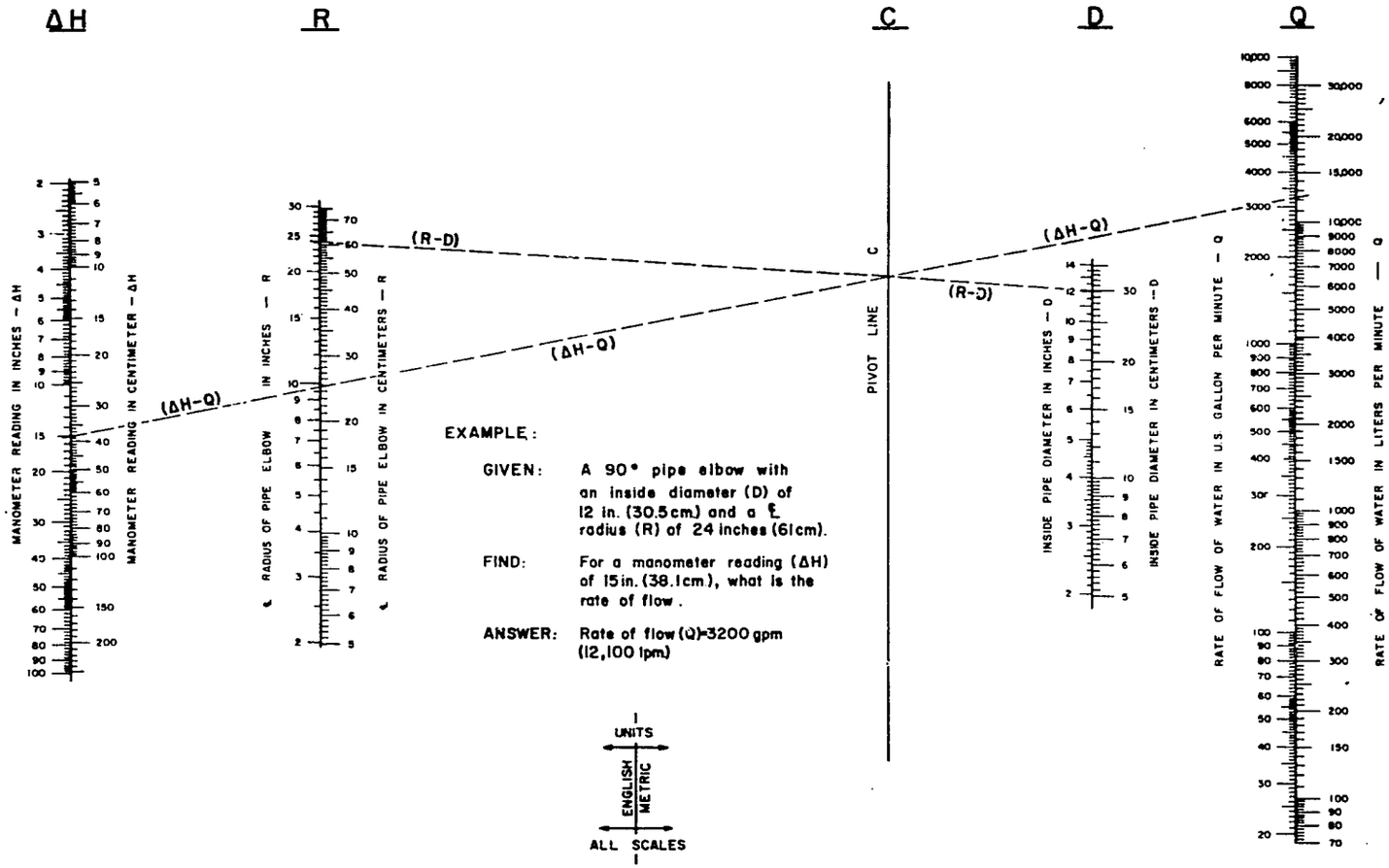

FIGURE 13-4 FLOW THROUGH AN ELBOW METER

USE ONLY FOR APPROXIMATE ESTIMATES OF FLOW

FEM 5/67

Application

This meter is applicable whenever a measurement of pipe flow is necessary and more expensive and accurate metering is not available. Any elbow in the system may be used and it is not necessary to disassemble the piping in order to install the meter. The elbow may be in any position - horizontal or vertical. The pipe must be flowing full, however, during calibration and operation.

Performance

The advantages of the elbow meter are its low cost and simplicity. When installed in an existing elbow, the additional system head loss is negligible - a significant advantage in comparison with orifice meters. Also the elbow meter is little affected by corrosion, or by "dirty" water providing the taps are flushed periodically. The major disadvantage is that the elbow meter must be calibrated in place when accuracy greater than 10 percent is required. When thus calibrated, the meter will be accurate to within 2 percent of full range. The accuracy of the meter is not impaired by upstream or downstream piping.

Reference

Taylor, D. C. and McPherson, M. B., "Elbow Meter Performance," Journal American Water Works Association, Vol. 46, p. 1087 (Nov. 1954).

APPENDIX

The difference in pressure (ΔH) is related to the velocity within the pipe according to the equation:

$$\Delta H = C_1 \frac{V^2}{2g}$$

where C_1 is a coefficient, V is the average velocity of water, and g the acceleration due to gravity. Using the continuity equation:

$$Q = AV \text{ (Discharge = Area x Velocity)}$$

we may solve for the discharge as a function of head differential, or:

$$Q = A\sqrt{\frac{2g}{C_1}}\sqrt{\Delta H}$$

For a circular pipe,

$$A = \pi \frac{D^2}{4} \qquad \text{(D = inside pipe diameter), and}$$

$$Q = \pi \frac{D^2}{4}\sqrt{\frac{2g}{C_1}}\sqrt{\Delta H}$$

It has been found that C_1 may be approximated by the dimensionless ratio 2D/R, where R is the centerline radius of the elbow. (See Figure 13-1). Substituting this into the above expression, we obtain

$$Q = \pi \frac{D^2}{4}\sqrt{\frac{gR}{D}}\sqrt{\Delta H}$$

The nomograph of Figure 13-4 is the solution of this equation.

WATER SUPPLY AND SANITATION IN DEVELOPING COUNTRIES

AGENCY FOR INTERNATIONAL DEVELOPMENT

UNIVERSITY OF NORTH CAROLINA

FREDERICK E. MCJUNKIN, EDITOR

May 1967

AID-UNC/IPSED Series Item No. 14

FIELD EXPEDIENTS (GIMMICKS AND GADGETS) IN WATER DISTRIBUTION SYSTEMS

ABSTRACT

Several special tools and methods developed in the field for construction, maintenance, or operation of water distribution systems are described, including techniques for installing service pipes, detecting and repairing leaks, disinfecting mains, operating valves, patching pavements, and cleaning meters.

(Key words: water distribution, maintenance, water pipe lines)

Sources of Information

P. F. Beaver, Water Distribution Supervisor
Charlotte Water Dept.
600 E. Trade Street
Charlotte, North Carolina 28201

A. J. Benedetti, Assistant Director & Water Superintendent
Dept. of Public Utilities
City of Tacoma
P. O. Box 11007
Tacoma, Washington 98411

J. D. Henry, Supervisor Distribution Division
Dallas City Water Works
2869 Municipal Street
Dallas, Texas 75215

Several of the items described have appeared in Willing Water, a publication of the American Water Works Association, Inc., 2 Park Avenue, New York, New York 10016.

Introduction

The special tools, devices, and methods described herein were developed, for the most part, by journeyman water works personnel. They are practical and ingenious, often the product of necessity, and have made employees' work easier, safer and more productive.

This publication series is prepared by the International Program in Sanitary Engineering Design (IPSED) under the sponsorship of the Community Water Supply Branch, Agency for International Development (AID), United States Department of State. IPSED is a program of the Department of Environmental Sciences and Engineering, School of Public Health, University of North Carolina at Chapel Hill. Correspondence should be addressed to Frederick E. McJunkin, Editor, IPSED, Box 630, Chapel Hill, N.C. 27514, U.S.A. Publications are supplied free of charge to engineers working in developing countries and may be obtained from U.S. embassies, U.S.A.I.D. missions, or by writing the University. Material for publication is invited.

Pulling Service Pipes

The City of Vancouver, B.C., Canada has developed a pipe puller to extract old service pipe and to pull in and attach new copper service pipe. This has also been used to pull back the blow or boring pipe with a new service following behind. This device is shown in Figures 14.1 and 14.2. The puller is set upon top of the old pipe or boring pipe. Notched cams on the puller, working on a ratchet principle, engage the pipe. The puller is then operated by a bar used as a lever and operated with a reciprocating motion. The puller is used in conjunction with a light weight aluminum, folding shoe set against the face of the ditch. The shoe eliminates the necessity of otherwise driving a bar or brace into the ground, which is advantageous because often the ground is too soft for this purpose.

An alternative method developed in Dallas pulls old service pipes with a service truck. When an old galvanized service pipe has failed and it is necessary to replace it with copper tubing, a new copper tube is connected with the old service pipe, usually at the meter connection side of the street. A chain is then attached to the end of the old service at the water main, then the chain is tied to the back end of the service truck. The service truck pulls the old pipe out and the new pipe follows the old. The new pipe is pulled to the right position in the excavation at the main and then connected to the original service corporation cock.

These methods make it unnecessary to trench or to bore a hole under pavement when renewing an old service, thus reducing the cost of renewing the service and restoring service more quickly.

FIGURE 14.1

PIPE PULLER

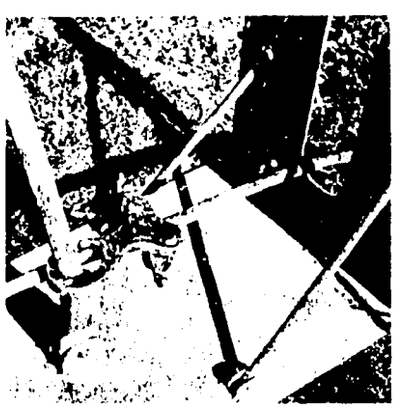

FIGURE 14.2

PIPE PULLER SHOWING NOTCHED CAMS

Driving Service Pipes

One of the old methods of putting a new service pipe under pavement without breaking the pavement was to drive an iron pipe from a tap hole in the street to the meter box location behind the curb, using a sledge hammer. In Dallas, this method has been replaced with a pneumatic tamper as the driving force. The tamper foot or pipe is placed against the end of the coupling on an iron pipe and as the tamper strikes, the pipe moves at a rate of from 1/4 inch to 1 inch per stroke depending upon compactness of the soil. In most soils other than rock, a pipe can be driven a distance of twenty feet (6 meters) in a few minutes. The iron pipe is driven from the tap hole to the meter box location, then removed, and a copper tube pulled through the hold. This method saves the need of breaking extra pavement and is faster and less expensive than the open cut method.

The City of Charlotte uses still another alternative for installing service pipes without excavating a ditch. This is shown in Figure 14.3. First, a wrench, lever, maul or sledge hammer, stake, and pipe cap are collected. A hole sufficient to start the first length of pipe is dug. The brace or stake is then driven about ten inches from the face of the excavation as shown in step 2, and the pipe laid in the trench. Then the wrench is fastened to the pipe slightly in front of the brace as shown in step 2 and the lever wedged between the wrench and the stake. In step 3, the pipe is wedged forward by moving the lever forward. In step 4, the lever is returned to the original position, the wrench loosened, moved back along the pipe to the face of the lever, and retightened to the pipe. These steps 3 and 4 are repeated until the pipe is completely driven. This method works satisfactorily in soils other than rock.

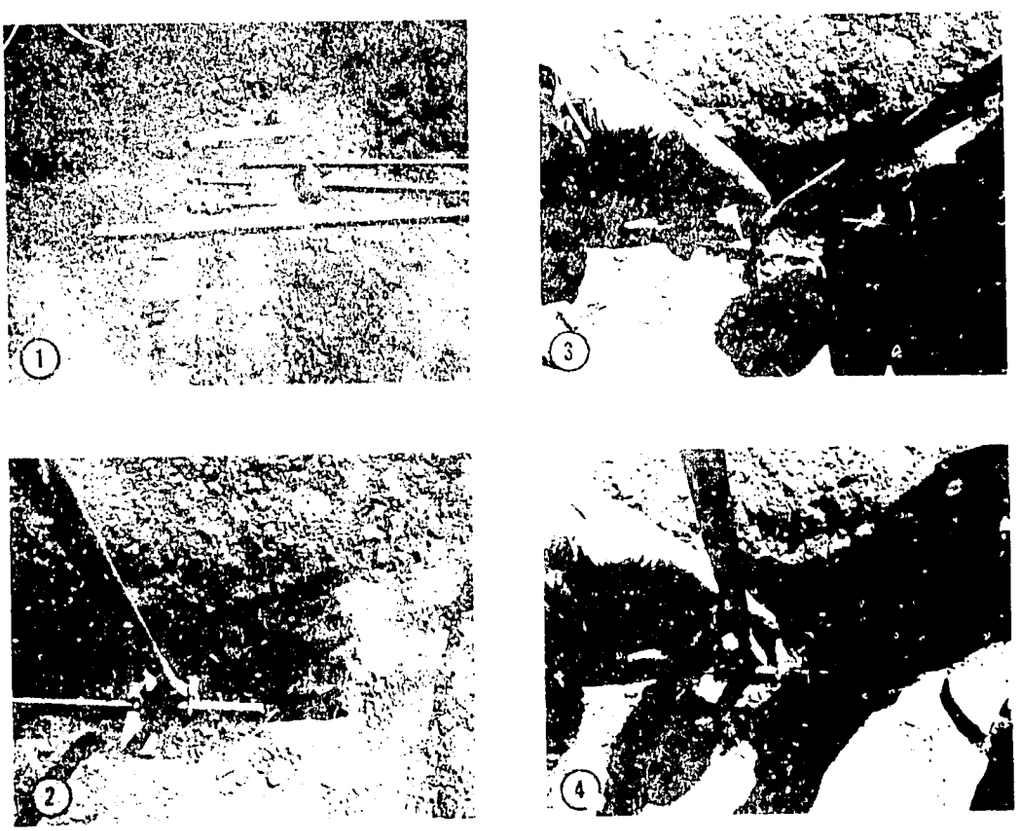

FIGURE 14.3 DRIVING SMALL-DIAMETER PIPE

Using Wooden Pegs

Wooden pegs have been used since ancient times to stop the flow of water. They are useful as a temporary measure to stop water until a permanent repair can be made. In Dallas, pegs are driven into holes in mains against the pressure, to remove the necessity of taking pressure off the main. After the water is stopped, the wooden peg is then sawed off and a tapping machine used to tap the peg out under pressure. A corporation cock is inserted to affect a permanent stoppage of the hole. Pegs cannot be used as the only repair because serious trouble may occur later when the peg rots and blows out.

Adapting Flaring Tools

For flaring copper service pipe without shutting off the upstream pressure, some utilities drill a hole in a regular commercial copper flaring tool. The hole is drilled along the center axis parallel with the tool, beginning at the pointed end that enters the copper tubing and progressing up the tool to the flared or knurled part of the tool. Here some smaller holes are drilled at right angles to the hollow part of the tool. When this tool is inserted in a copper tube under full water pressure, water is forced out of the center holes in the side of the tool, allowing the workman to flare the tube against the water pressure. After the tube is flared, an open curb stop is fastened to the ferrule. The curb stop can then be turned off, thereby shutting off the stream of water.

This method enables the workmen to put a broken copper service back in service without the necessity of turning the pressure off in the main or closing the corporation stop at the main. At least one company, Mueller, carries such a tool as a catalog item. A slightly different version is used in Vancouver; their tool is equipped with a bypass allowing water to escape during flaring operations. (See Figure 14.4).

Freezing Pipe with Dry Ice

Dry ice (carbon dioxide in solid state) may be used to freeze pipes, thus acting as a temporary or emergency valve or stop cock. Dry ice is placed around the pipe and then gasoline is added, causing the dry ice to vaporize, thereby freezing the pipe at a faster rate. Fifteen to thirty minutes are usually required to freeze a 3/4 inch water service, depending on ambient temperatures. After the pipe is frozen, extensions or repairs of that part of the pipe beyond the frozen section may be made without taking pressure off the service. A two inch pipe can be frozen in less than one hour. No water movement in the pipe can be allowed while the freezing process is under way. This technique often enables savings by eliminating the necessity of making extensive breaks in streets paved with concrete and it also removes the necessity of having more than one customer out of water at one time.

Extending Valve Stems

When an emergency arises and it is necessary to shut off mains in a hurry, fitting valve keys on valve nuts located in deep manholes may be a particularly difficult problem, especially if the manhole is full of water or a wild stream of water is flowing over the top of the manhole or valve box. A permanent valve stem extension removes that handicap. It also removes the need for a ten to fifteen foot unyielding valve key.

A steel rod is fashioned the proper length with a hub on the bottom end to fit the regular valve nut at the bottom of the manhole or deep valve stack. At the top end of the extension a regular valve nut is fastened so that a standard valve key will fit thereon and operate the valve. In an emergency, the valve nuts on top of the extensions are readily accessible at the top of the manhole or valve stack, so that the valve can be closed immediately. Extensions are heavily coated with a protective paint to make them long lasting.

Marking Valve Information

In Dallas, the number of turns of a large valve is carefully noted and cut with a chisel inside the north edge of a manhole casting so that any valve man can readily know how many turns it takes to operate that particular valve. For example if the valve has 375 turns, the figure 375 is cut with a chisel on the edge of the manhole casting with a capital letter "T" following the last figure. This "T" of course indicates turns to him. The north side is used so that he will know where to look for the marking in case

it is covered with rust or mud. This information is particularly useful when using turn-registering powered valve closers, and reduces the danger of breaking a valve.

If the letter "V" is cut with a chisel on a curb, sidewalk, or post with the "V" pointing towards the valve, and the distance from the "V" to the valve cover cut beside the letter, the valve will be easier to locate than from written measurements alone on valve cards or block maps. Experience shows that one cannot have too many records of a valve location when forced to isolate a main break.

Jetting Valve Stacks and Vaults

Quite often valves in stacks or vaults cannot be operated with a valve key because the stack is full of mud, gravel, or debris. The debris can be jetted out with water from a piece of 1/2 inch or 3/4 inch iron pipe joined to the end of a hose whose other end is connected to a nearby fire hydrant or water service. The water pressure is turned on and the pipe inserted into the valve stack creating a jetting action that blows the mud, gravel, or debris out through the top of the stack within a few minutes, often eliminating the expense of a time-consuming excavation job.

Tacoma has made good use of a small, electric motor-driven, positive displacement pump for the same purpose. The pump is powered by a car battery and is similar to bilge pumps used in small boats. Complete with suction and discharge hoses and an extra electrical cable for permanent connection to the car's battery, it can be stored in the trunk of a car. Although it can be operated from the trunk, it should be removed and placed beside the structure to be pumped. The Tacoma unit has a capacity of approximately 5 gallons per minute at 10 feet of total head and costs about US $40. (See Figure 14.5).

FIGURE 14.4

TOOL FOR FLARING UNDER PRESSURE

FIGURE 14.5

BATTERY DRIVEN PUMP FOR PUMPING OUT SMALL VAULTS

Detecting Leaks

Phenolpthalein is used in Dallas to determine if water in a street is coming from a water line leak. Dallas water has a lime content from the treatment process and turns a bright "polk berry pink" when phenolpthalein is added to it. Therefore if water in the street turns a pink or red color when phenolpthalein is added, that is a strong indication that the water is coming from the water lines. This method is effective in helping to identify whether the water is coming from a main or is seepage drain water. Careful use of this chemical in Dallas has eliminated many needless exploratory excavations.

Repairing Pavements with Dry Patches

In heavily traveled streets or hazardous places pavement cuts can be replaced with a throughly tamped, dry-mixed concrete base, and a tamped-in cold-mix or emulsion surface, and the road can be opened to traffic immediately. In this method, no water is used in the aggregate. Damp gravel is simply mixed with cement and the hole patched as described. The need for barricades in the street for two to three days after main repairs is eliminated.

Cleaning Meter Gears

A convenient cleaning vat for meter gears can be fashioned from a 5-gallon drum. Cleaning solvent in the drum is agitated by means of air piped into the bottom. A wire mesh basket containing the gears is then placed in the drum. This device is effective for cleaning dirt and grease from meter gears. Similarly a large wire basket may be used to dip brass meter parts in acid. When the basket is lifted, the acid water runs off immediately.

Disinfecting Mains

The City of Portland has developed a solution feeder for disinfecting newly laid water mains before they are put in service. Figure 14.6 shows a schematic arrangement of this device. In the disinfection process, water is fed into the new main from an adjacent hydrant with the rate of flow controlled by a gate valve. A hydraulic injector is installed alongside, bypassing the gate valve. The vacuum developed by the venturi tube in the injector draws in the disinfecting solution, mixing it with the water flowing through the injector. This mixed solution then combines with the main flow of water entering the lines through the gate valve.

In practice a concentrated sodium hypochlorite solution is used. The dosage is controlled by a needle valve. The hypochlorite solution line is fitted with a check valve to prevent back flow and a pressure gauge placed on the water supply line aids the operator in controlling the strength of the solution entering the main.

MAIN STERILIZER Schematic arrangement of water main sterilizer showing the water supply from hydrant, the introduction of the concentrated hypo clorite solution by the injector, together with the mixed solution joining the main flow entering the line to be sterilized.

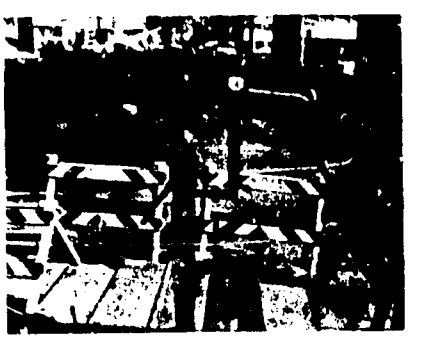

MAIN STERILIZER
Main sterilizer employs the hydraulic injector principle for adding sodium hypochlorite solution to the water when filling newly laid water mains. Rate of filling is controlled by plug valve having an injector by-pass. Dosage of hypochlorite solution is controlled by needle valve. Pressure gauge aids operator in controlling the concentration

FIGURE 14.6 SOLUTION FEEDER FOR MAIN DISINFECTION

The use of the injector, developed at a cost of approximately US $100, replaces an older method of pouring the hypochlorite solution through a funnel into an open stand pipe. In the old method, occasionally air trapped inside the new main would force the solution back out of the standpipe spraying the operator. The new method has materially speeded up the process of filling new mains and provides a more uniform distribution of the hypochlorite solution. Main sterilization can be done by one man, more effectively, with less cost, and with increased safety.

Shoring Excavations with Portable Casings

The City of Seattle was recently faced with the problem of installing some 50 bell-joint clamps on a 60-inch cast iron water main in unstable soil near a heavily traveled highway. Individual shoring of each excavation would have been costly as well as unsatisfactory due to rapid sloughing of the unstable soil. To overcome this problem, two 8-foot long sections of 66-inch diameter used steel pipe were slotted on either side and used as portable casing to be placed over the water main immediately after its excavation. (See Figure 14.7). Pit run sand and gravel were placed around the outside of the casing to prevent soil slippage and to retain support under the highway. A small amount of hand excavation inside the casing permitted safe and easy installation of the bell-joint clamps.

The casing can be readily moved with hoisting shackles installed through holes near the top rim. This device has also been found useful on the repair of small water mains in unstable ground. In addition to saving of time, it protects the workmen against cave-ins.

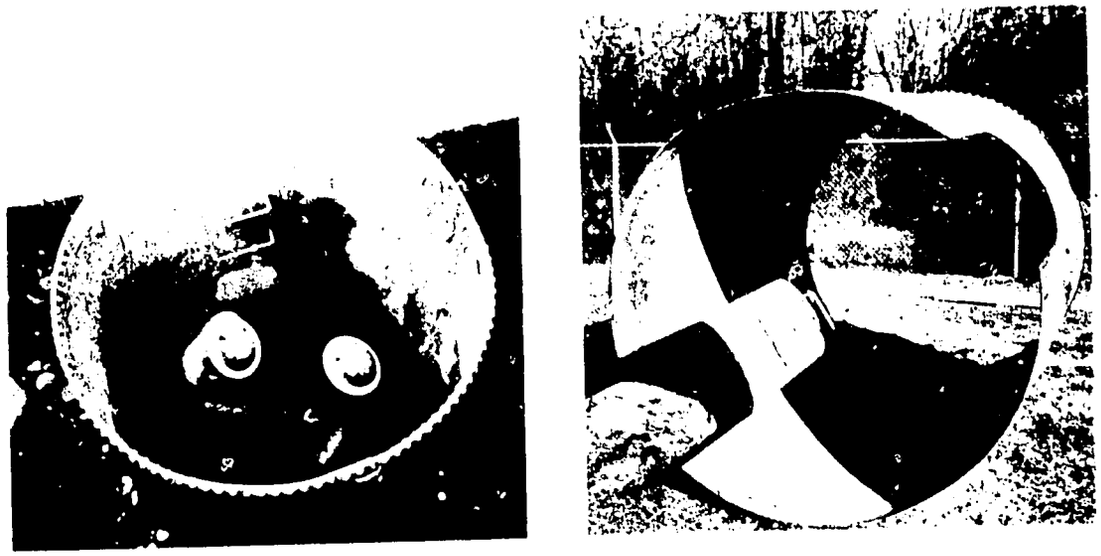

FIGURE 14.7 SHORING WITH PORTABLE CASING

Postscript

These ideas were developed in the field by journeyman workers and refined through experience. We encourage any water works man who knows of similar special and useful devices, ideas, or methods to suggest them for publication in this series.

INTERNATIONAL PROGRAM IN SANITARY ENGINEERING DESIGN (IPSED) AN EDUCATIONAL OPPORTUNITY

The International Program in Sanitary Engineering Design (IPSED) at the University of North Carolina was created in 1962 as part of the United States participation in the Global Community Water Supply Program. IPSED is sponsored by the Agency for International Development (AID) of the U. S. Department of State. One IPSED function is education of engineers from developing countries; education intended to enable them to assume responsibility for preparing project and program studies and reports, preparing financial and feasibility studies, designing works, preparing detailed plans, specifications, and contract documents, and for engineering supervision of construction.

A new group of participants enters the program each September, with each participant's program running six to twelve months - averaging about ten months. The participant is first enrolled in an intensive one-semester academic program at the University. The emphasis during this phase of the program is on instruction in design of water and sewage works. If an academically qualified participant so desires, he may enroll for postgraduate credit, up to eleven semester hours, and receive such credit on a University transcript on successful completion of the academic courses. Application for enrollment for credit may be made after arrival at the University. As was stated, enrollment for credit is optional and is not mandatory for enrollment in IPSED.

Following his academic work, each participant is usually assigned to a municipal water works or other public agency for one month as a professional observer. Following this, each participant serves a two to six month "internship" in the office of a U. S. consulting engineer.

The program at UNC is conducted by the staff of the Department of Environmental Sciences and Engineering with visiting lecturers drawn from engineering and public agency offices. Group trips are made to water supply and waste-water disposal projects in operation and under construction, to design offices, to facilities of equipment manufacturers, and to local and national meetings of professional and technical societies. The UNC staff also monitors field residence training.

Participants entering the Program must have an engineering degree, must have some specialized experience, advanced education, or interest in sanitary engineering, and must be able to communicate competently in English. Applicants must submit for review transcripts of college grades and the usual biographical data. Information as to the present occupation and employment of the applicant is also required, as well as assurance from his employer that he will be assigned, on returning to his country, to a position at least equal to that held prior to his training, in which the newly acquired knowledge can be applied.

The U. S. Agency for International Development Missions in various countries, in cooperation with host governments, select and sponsor participants. Application may be made directly to local AID Missions. These are generally located near the U. S. Embassy. In countries where there is no AID mission, inquiries may be directed to the nearest U. S. diplomatic or consular office, preferably to the Educational or Cultural Affairs Officer.

The World Health Organization also sponsors participants in this program, and inquiries may be directed to their headquarters in Geneva, Switzerland or to any one of their regional offices located in Copenhagen, Denmark; Manila, Philippines; Alexandria, United Arab Republic; New Delhi, India; and Washington, D. C., U.S.A. Many local World Health Organization (and Pan American Health Organization) engineers are familiar with IPSED and may be of assistance in making application. The Ford and Rockefeller Foundations, the Organization of American States, and other such agencies may also sponsor participants. Applications from self-sponsored participants will be considered but such participants must expect to provide their own financial support.

WATER SUPPLY AND SANITATION IN DEVELOPING COUNTRIES

AGENCY FOR INTERNATIONAL DEVELOPMENT

UNIVERSITY OF NORTH CAROLINA

FREDERICK E. MCJUNKIN, EDITOR

June 1967

AID-UNC/IPSED Series Item No. 15

JETTING SMALL TUBEWELLS BY HAND

ABSTRACT

The "sludger method," primitive but effective, for construction of small tubular wells is described. Where the soils to be penetrated are fine, the maximum depth of the well does not exceed 250 feet (80 meters), and labor is plentiful and cheap, "sludging in" is a simple, economical, dependable method that can be accomplished entirely with handtools.

(Key words: wells, ground water, water supply)

Sources of Information

John A. Bellizia, "East Pakistan Fights Disease," AID Internal Paper, June 1956.

East Pakistan Directorate of Public Health Engineering, "Facts About a Tube-Well," Dacca, No Date.

Evelyn L. Shockey, Technical Information Officer, Health Service, Office of War on Hunger, AID, Washington, D. C., U.S.A. (Photographs).

Introduction

Throughout most of East Pakistan tubular wells, provided with sturdy hand pumps and concrete protective aprons, are a practical solution to the village drinking water supply problem. There a well 200 feet deep will usually draw fresh water of good quality. Because of hydrostatic pressure of overlying brackish waters, shallow well pumps can be used to draw water from most of these wells.

However installation of such wells poses numerous problems. Many of the villages are inaccessible except by boat or on foot. Trained operators of well driving rigs are scarce, while the rigs themselves are costly, heavy, and cumbersome.

This publication series is prepared by the International Program in Sanitary Engineering Design (IPSED) under the sponsorship of the Community Water Supply Branch, Agency for International Development (AID), United States Department of State. IPSED is a program of the Department of Environmental Sciences and Engineering, School of Public Health, University of North Carolina at Chapel Hill. Correspondence should be addressed to Frederick E. McJunkin, Editor, IPSED, Box 630, Chapel Hill, N.C., 27514, U.S.A. Publications are supplied free of charge to engineers working in developing countries and may be obtained from U.S. embassies, U.S.A.I.D. missions, or by writing the University. Material for publication is invited.

One solution developed by Pakistanis is a method of "sludging in" the well pipes. This method is satisfactory in fine or sandy soils, where the maximum well depth is less than 250 feet (80 meters), and where labor is plentiful and cheap. No tools are required other than a length of chain and two pipe wrenches.

The labor cost per successful well is usually less than US $35. Added to the labor cost is about US $125 to cover pipe, well screens, pump, check valve, and concrete for a platform. Total cost is approximately US $160 per well.

Construction

The method of construction is illustrated in the accompanying photographs.

Photographs 1 through 5 show the necessary preparation while photos 6 through 10 show the actual sinking of the well pipe. The pipe is pushed up and down by jerking action through the bamboo lever chained to the pipe. While the pipe is penetrating, the loosened soil enters at the bottom, is suspended in the water, and flushed out through the top of the pipe, the entire sequence deepening the hole. As the pipe penetrates the hole, new pieces are added (photo 12).

During the process one man sits on top of the staging operating the "flap valve" (photos 7 and 8) and also insuring that the pipe is driven vertically. At every upward and downward motion of the boring pipe, he operates his hand in the mouth of the pipe in such a way that a vacuum is created to give a sucking action.

During the progress of the work, soil samples are collected and examined at every 5 feet (1.5 meters) of depth. Boring continues until good water bearing strata are obtained. Then the whole length of pipe is withdrawn piece by piece keeping the bore intact. The bamboo lever, chain, and pipe wrenches may be used to free the pipe in event of difficulty. Immediately after withdrawal, strainers along with pipes are fitted and lowered to the ascertained depth.

Immediately after sinking the well, it should be washed with a powerful pump to clean off sand and other foreign materials. Washing (or development) may also be done by tilting (surging) water near the strainer by a weight hanging from a wire-rope and continuously pumping the well with an ordinary hand pump for at least 16 working hours.

Contamination

Tube-wells should be located away from surface drainage and above flood level. They should be at least 100 feet (30 meters) removed from any sewer, latrine, or cesspool.

The construction of a concrete platform with a spill water drain is an integral part of sinking a tube well. Also any space between the outside of the casing and the inside of the bored hole should be cemented with grout. Otherwise used surface water around the well may trickle down the side of the tube-well pipe to the strainer and enter the well.

Following construction and before use, the well installation should be disinfected with a chlorine solution prepared by mixing a tablespoonful of calcium or sodium hypochlorite, lime chloride, or bleaching powder with a little water to make a thin paste, carefully breaking all lumps. Stir this into a quart (liter) of water. Allow the mixture to stand a short time. Pour off the clear liquid into the well. Agitate the water in the well, mixing it throughly, and let it stand several hours, preferably overnight. Then flush the well to remove all the disinfecting agent. The well casing above the water level can be disinfected by returning the water to the well during the first part of the flushing, thereby washing the walls with chlorinated water.

(1) THE SITE FOR THE WELL IS CHOSEN - READILY FROM SOURCES OF POLLUTION AND ACCESSIBLE TO THE VILLAGERS.

(2) A BAMBOO SCAFFOLDING AND A BAMBOO PIVOT BAR FOR THE EXCAVATION LEVER ARE SET.

(3) A SHARPENED COUPLING IS SCREWED ONTO THE END OF A 10 FOOT (3 METER) LENGTH OF 1 1/2 INCH (4 CENTIMETER) GALVANIZED IRON PIPE.

(4) A HOLE ABOUT 3 FEET SQUARE AND 2 FEET DEEP IS DUG AND FILLED WITH WATER.

(5) THE PIPE IS HELD IN A VERTICAL POSITION AND FASTENED TO THE LEVER WITH A CHAIN.

FIGURE 15·1
"SLUDGER METHOD" FOR SINKING SMALL TUBEWELLS

(6) [illegible] WHO RAISES [illegible]

(7) THIS MAN'S HAND OPERATES AS A FLAP VALVE. AS THE PIPE IS RAISED HE COVERS THE END OF THE PIPE WITH HIS HAND

(8) AS THE PIPE DROPS HE REMOVES HIS HAND, ALLOWING MUD AND WATER FROM THE BOTTOM OF THE WELL TO ESCAPE. THE WATER TRICKLES DOWN THE OUTSIDE OF THE PIPE FROM THE CHALLENG WATER FILLED HOLE

(9) AS THE HOLE DEEPENS AND THE PIPE IS LOWERED, THE CHAIN FASTENING THE WELL PIPE TO THE LEVER IS RAISED

(10) EVENTUALLY, THE CHALLENGE IS STANDING ON THE GROUND

FIGURE 15·1 (CONT.)
"SLUDGER METHOD" FOR
SINKING SMALL TUBEWELLS

(11) WHEN ONE LENGTH OF PIPE IS SUNK TO ITS FULL LENGTH THE LEVER IS DISCONNECTED

(12) A NEW LENGTH OF PIPE IS COUPLED ON.

(13) MORE WATER ADDED TO THE PIT AS THE LEVEL DROPS

(14) AND THE WELL DRIVING BY THE "SLUDGING" PROCESS CONTINUES. SIX MEN CAN INSTALL A 1-1/2 INCH (4 CM) TUBULAR WELL 200FEET (60 METERS) DEEP IN FOUR DAYS BY THIS METHOD

FIGURE 15·1 (CONT.)
"SLUDGER METHOD" FOR
SINKING SMALL TUBEWELLS

REGIONAL SCHOOL OF SANITARY ENGINEERING
ESCUELA REGIONAL DE INGENIERIA SANITARIA

Los estudios de Ingeniería Sanitaria a nivel de post-grado, fueron establecidos en la Facultad de Ingeniería de la Universidad de San Carlos de Guatemala con carácter regional, para Centroamérica, de acuerdo con la resolución del Consejo Superior Universitario Centroamericano - CSUCA - en su III Reunión Ordinaria.

La Escuela Regional ha sido planeada para dotar a Centroamérica de una Institución regional, capaz de tener a su cargo, en forma permanente, la educación avanzada en el campo de la Ingeniería Sanitaria, para llenar la creciente demanda de Ingenieros de esta especialidad y colaborar en esta forma en el éxito de los programas de Obras Sanitarias actualmente en ejecución y expansión.

El programa de enseñanza, con duración de un año, está concebido a que los profesionales que participan en el mismo adquieran, además de un conocimiento con sólidas bases científicas y tecnológicas, un concepto fundamental de planeamiento a largo plazo y lo relativo a la programación, diseño, construcción, administración, operación y financiamiento de obras sanitarias.

Como parte y complemento del programa de enseñanza, se da especial interés a la investigación aplicada para adaptar las técnicas y métodos modernos de Ingeniería Sanitaria a las condiciones culturales y económicas de la región.

Las directrices de la Escuela Regional son fijadas por un Comité Consultivo, integrado por representantes de las cinco Universidades centroamericanas. A propuesta de este Comité, se ha puesto énfasis en el programa de estudios en los aspectos fundamentales de agua potable y alcantarillado y disposición de desechos, incluyendo también las actividades generales en los campos de Saneamiento y la Salud Publica.

Por acuerdo entre el CSUCA y Regional Office Central America and Panama, U.S.A.I.D., la Universidad de Carolina del Norte colaborará y participará por medio de su Escuela de Salud Pública, en el programa regional de estudios de post-grado de Ingeniería Sanitaria en la Universidad de San Carlos de Guatemala, a través de un intercambio de profesores y consultores.

Las solicitudes de inscripción deben hacerse en formulario especial, el cual puede obtenerse en la Secretaría de la Facultad de Ingeniería de la Universidad de San Carlos de Guatemala o solicitarlo por la vía postal a la Secretaría General del CSUCA, en San José de Costa Rica. Estas solicitudes deberán presentarse, con duplicado, a la Secretaría General de la Universidad en el país del solicitante o a la dependencia que corresponda. Las solicitudes de profesionales no residentes en Centro América deberán dirigirse directamente a la Universidad de San Carlos de Guatemala.

"NEW FACTORS IN THE DESIGN, OPERATION AND PERFORMANCE OF WASTE-STABILIZATION PONDS"

In the developing countries, unit costs of waste-stabilization ponds are generally low. Moreover, in the tropics and subtropics, environmental conditions are conducive to a high level of pond performance. In view of this, the theory, operation and performance of such ponds under these conditions have been studied. This work has recently been reported by former IPSED staff member G.v.R. Marais in the Bulletin of the World Health Organization, Vol. 34 (1966) pages 737-763. Reprints are available from the Editor, IPSED, Box 630, Chapel Hill, N. C., 27514, U.S.A.

WATER SUPPLY AND SANITATION IN DEVELOPING COUNTRIES

AGENCY FOR INTERNATIONAL DEVELOPMENT

UNIVERSITY OF NORTH CAROLINA

FREDERICK E. MCJUNKIN, EDITOR

July 1967

AID-UNC/IPSED Series Item No. 16

TEMPORARY CHLORINATION OF SMALL WATER SUPPLIES

ABSTRACT

Construction and operation of a small (about 20 liters) portable chlorinator is described. It may be constructed of local materials for about U.S. $9 and has been successfully used in rural water supplies in the Sudan.

(Key words: chlorination, water supply, disinfection)

Source of Information

This item was prepared from information supplied by the Community Water Supply Programme, World Health Organization (WHO).

The apparatus was developed in connection with WHO Project Sudan 42; the drawing and schedule of costs were taken from the report of Dr. E. Grombach, Short Term Consultant to the WHO Eastern Mediterrean Regional Office.

Construction

Figure 16.1 shows the construction of a portable chlorinator which has been installed successfully in a number of rural water supply installations in the Sudan. Basically the unit consists of an inverted plastic "jerry can" container of 20 liters (about 5 U.S. gallons) capacity, in the base of which a hole has been cut. A sieve (mosquito gauze) and a loose-fitting, non-airtight cover (plastic) are removable for filling and access. The float may be made of styroform - a foam-like plastic commonly used as packing material. Glass tees are used for the liquid intake.

The solution feed rate may be controlled by adjusting the orifice diameter of the stem of the tee. The diameter may be decreased by drawing out the glass stem over a Bunsen burner or other gas flame and nipping it off by trial and error until a satisfactory solution feed rate is achieved.

This publication series is prepared by the International Program in Sanitary Engineering Design (IPSED) under the sponsorship of the Community Water Supply Branch, Agency for International Development (AID), United States Department of State. IPSED is a program of the Department of Environmental Sciences and Engineering, School of Public Health, University of North Carolina at Chapel Hill. Correspondence should be addressed to Frederick E. McJunkin, Editor, IPSED, Box 630, Chapel Hill, N.C., 27514, U.S.A. Publications are issued free of charge to engineers working in developing countries and may be obtained from U.S. embassies, U.S.A.I.D. missions, or by writing the University. Material for publication is invited.

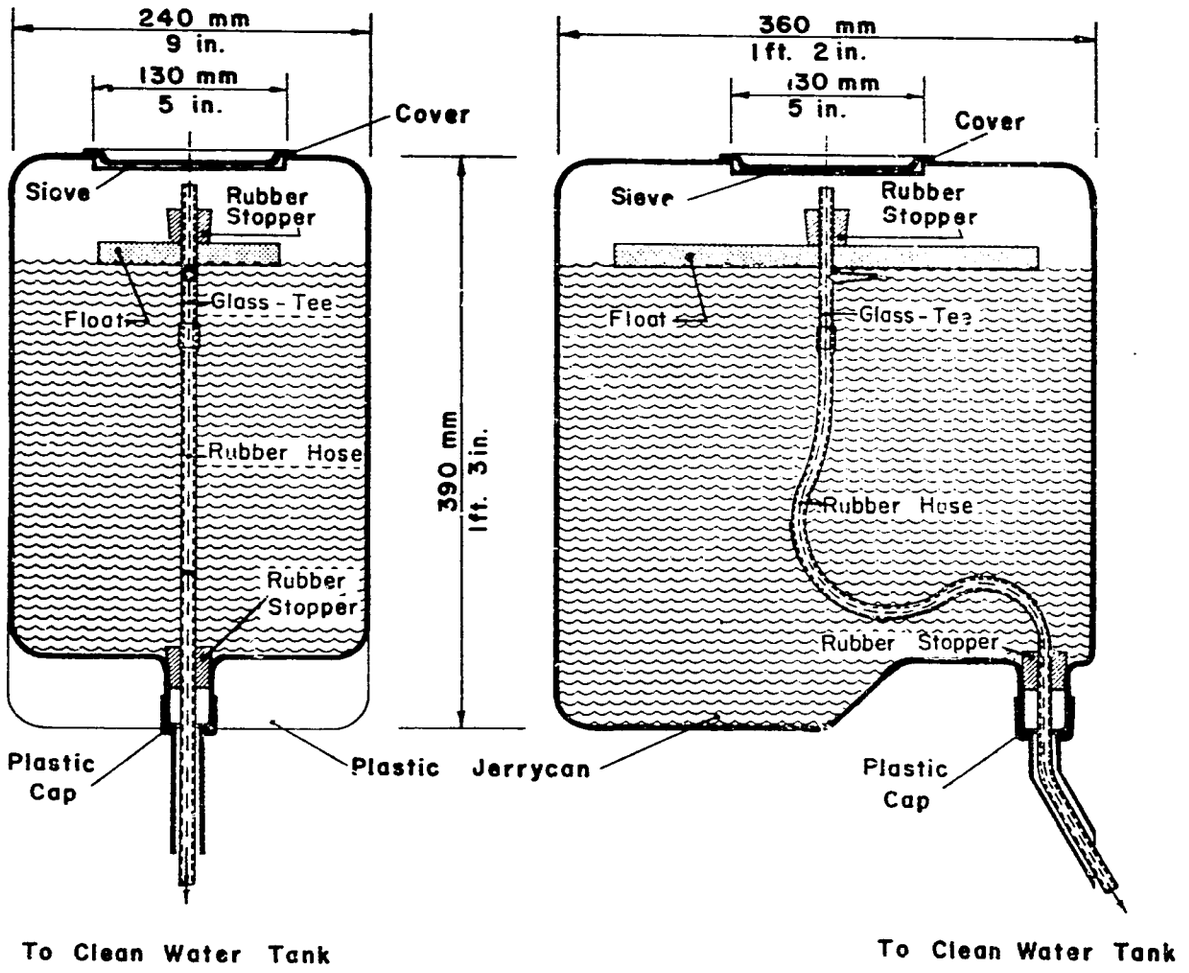

FIGURE 16-1 PLASTIC JERRYCAN CHLORINATOR

For a given orifice diameter and depth below the float, the unit will discharge at a near-constant rate due to the constant hydraulic head maintained above the orifice by movement of the float as solution is discharged.

Operation

In the Sudan, chloride of lime is used as disinfecting agent, and mixed at the rate of 100 grams (the approximate content of a tea glass) to 5 liters of water (0.21 pound to 1.25 US gallons of water) in a bucket and is allowed to stand for some hours before pouring into the chlorinator, taking care that the inactive sediment is excluded and thrown away. Mixing and standing of solution in alternate buckets is timed in accordance with quantity of water to be treated. Tomorrow's first bucketful is mixed today and stands overnight.

Allowing for 25 per cent chlorine content in the chloride of lime, the above makes a solution of 5,000 parts per million (ppm) chlorine, capable of imparting a dose of 1 ppm to 25,000 liters (6,600 US gallons, 5,500 UK gallons).

Cost

The total cost was about US $9 per unit and all materials were obtained locally except the glass tees. The first few tees were obtained from a local laboratory, later ones were ordered from overseas. Table 16.1 lists quantities and costs.

Note

Descriptions of solution-feed chlorinators have been published previously in Water Supply and Sanitation in Developing Countries as AID-UNC/IPSED Series Items No. 4, No. 7, No. 8, No. 9, and No. 10. Item No. 5 could also be adapted to such use.

Table 16.1

ONF PLASTIC JERRYCAN CHLORINATOR WITH FLOATING OUTLET

Bill of Quantities and Costs (Sudan)

	US $ equivalent
a) Chlorinator	
1 Plastic Jerrycan 25 liter (5 gallon)	1.01
1 Float of Plastic foam 28 cm/12cm/1.2cm (11 in/5in/1/2in)	0.14
3 Glass Tube - tee, ext. dia 7mm (1/4 in), length 50/50/50mm (2/2/2 in) with nozzles worked to various intake width	0.79
3 Rubber stoppers, bottom 25 mm (1 in), top 29 mm	0.22
1 Rubber tubing, ext. dia 9 mm, int. dia 6 mm (1/4 in) extremely flexible, length 120 cm (50 in)	0.28
Mounting of chlorinator in workshop	0.57
Transport	1.01
	4.02
b) Auxiliary Equipment	
1 Plastic Funnel	0.28
1 Plastic Tubing, ext. dia 12 mm, int. dia 9 mm (3/8 in), length, according to plant lay-out, 10 m (33 ft)	2.30
2 Plastic Buckets 6 liter (6 quart) for preparing bleach solution	2.02
	4.60
Total cost of Jerrycan Chlorinator	8.62

WATER SUPPLY AND SANITATION IN DEVELOPING COUNTRIES

AGENCY FOR INTERNATIONAL DEVELOPMENT

UNIVERSITY OF NORTH CAROLINA

FREDERICK E. MCJUNKIN, EDITOR

August 1967

AID-UNC/IPSED Series Item No. 17

AN INEXPENSIVE, TRUCK-MOUNTED, JETTING-DRIVING WELL DRILLING RIG

ABSTRACT

Construction and operation of a simple, inexpensive, truck-mounted well drilling rig suitable for jetting and driving 2-inch (5-cm) diameter well pipe in alluvial soils are described. The cost to make such a rig in Cambodia is about US $100, exclusive of the truck, and each rig can drill about 9 wells per month at an average depth of 100 feet (30 meters).

(Key words: wells, ground water, water supply)

Source of Information

This drill rig was developed in 1961 by Marvin E. Miller, at that time Well Drilling Advisor, U. S. Agency for International Development (USAID), Cambodia; and is described in several internal AID documents by Bruce T. Wood, formerly Sanitarian, USAID, Cambodia. These documents were made available to the editor by Arthur H. Holloway, Acting Chief, Community Water Supply Branch, Office of the War on Hunger, USAID, Washington, D. C.

Construction

The rig is basically a Dodge Power Wagon or similar truck with a folding steel mast bolted to the truck bed. Figure 17.1 shows the general layout while Figure 17.2 details the necessary subassemblies. The pipe or casing is driven by a sliding 90-pound (40-kilogram) weight or hammer (Detail A) made by filling a 6-inch (15-cm) piece of casing with lead and capping both ends with steel plate. The drop hammer, sometimes known as a driving monkey, slides on a special shaft with a flared driving ring at its base.

Details B, C, D, E, J, and K illustrate the assembly of the mast and its supports. The mast may be lowered by removing one bolt at its base and rotating it about the shaft shown in Details C and K. The mast assembly may be easily removed from the truck by removing the three bolts fastening it to the truck bed. Slight adjustments in the dimensions shown in Details C, E, and I may be necessary for trucks with different dimensions than those shown.

This publication series is prepared by the International Program in Sanitary Engineering Design (IPSED) under the sponsorship of the Community Water Supply Branch, Agency for International Development (AID), United States Department of State. IPSED is a program of the Department of Environmental Sciences and Engineering, School of Public Health, University of North Carolina at Chapel Hill. Communications should be addressed to Frederick E. McJunkin, Editor, IPSED, Box 30, Chapel Hill, N. C. 27514, U.S.A. Requests for additional copies of this or other IPSED publications, or for information concerning the availability of the following issues of the series, should be addressed to the Superintendent of Documents, or by writing the University. Subscriptions to complete

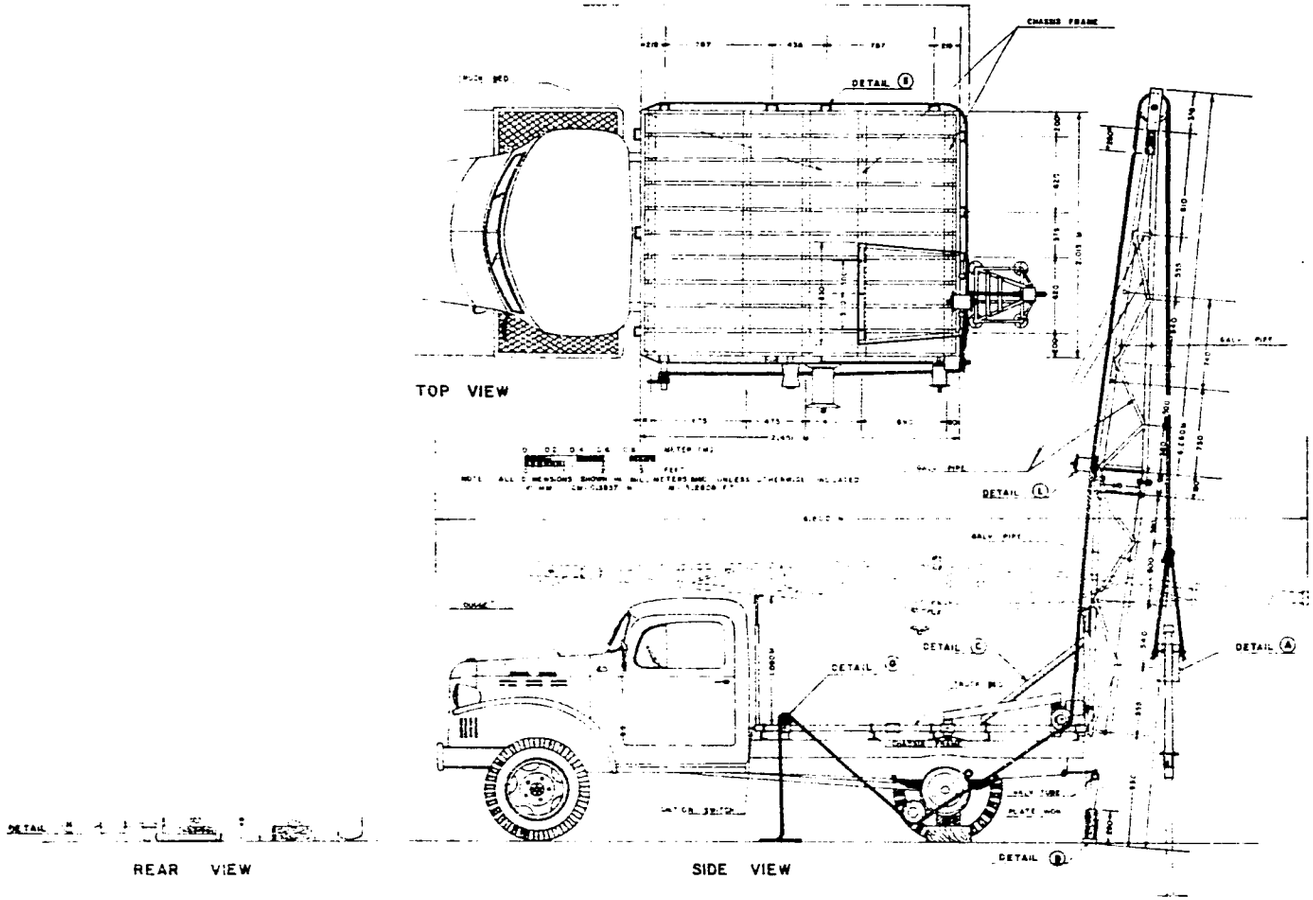

FIGURE 17.1 TRUCK-MOUNTED, JETTING-DRIVING WELL DRILLING RIG.

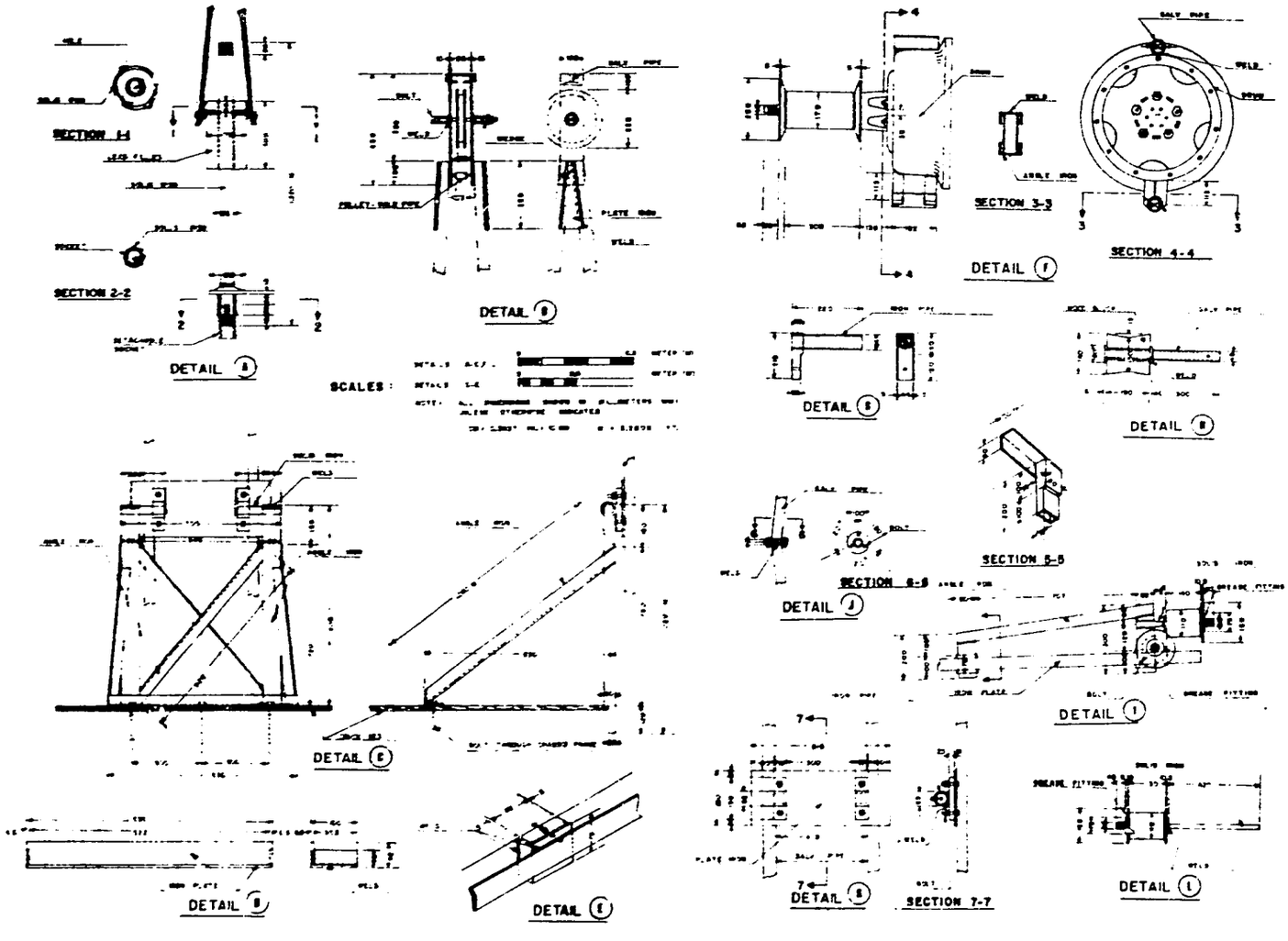

FIGURE 17.2 DETAILS OF WELL DRILLING RIG SUBASSEMBLIES

For power, a rear wheel is removed and replaced with a cathead (Detail F) and spudder wheel (Detail H). A stake (Detail G) is provided for letting out rope or cable as drilling progresses. Several guide sheaves (Details I and L) and a crown pulley at the top of the mast (Detail B) complete the rope assembly.

Operation

Setting up. Place truck on the drilling site, chock the wheels, raise the mast, place the left rear axle on blocks, and level the machine. Replace the left rear wheel with the cathead and spudder wheels (Figure 17.3.1). Attach a ten-foot length of two-inch pipe to the hammer assembly and drive this piece of pipe into the ground, making sure that the pipe is vertically alined (Figure 17.3.2). The driller in Figure 17.3.2 is using the cathead to lift the hammer. When using the cathead without the spudder arm the truck should be in a forward gear. Dig a mud pit consisting of two holes approximately 3 feet by 3 feet by 2 feet (1 m x 1 m x 2/3 m) and connect them with a shallow trench. Next, dig a trench from the well casing to the mud pit.

Drilling

Screw bit (Figure 17.3.3) on to end of 10-foot (3-meter) length of 3/4-inch (2-cm) pipe. Insert in 2-inch casing and begin pumping. When circulation of drilling fluid is established begin jetting and, using either the spudder arm or cathead alone, raise and lower the drill pipe while a driller continuously turns the pipe in a 180° arc so that the hole drilled will be round (Figure 17.3.4). Continue drilling by adding 10-foot lengths of drill pipe until 30 feet (10 meters) has been jetted. Remove drill rod, add a 10-foot length of 2-inch casing and drive. Remove hammer, and drill by jetting 10 more feet. Alternate in this manner, keeping the jetted drillhole about 20 feet (6 meters) beyond the end of the casing until sand is reached.

The jetting bit shown in Figure 17.3.3 was made from an automobile leaf spring, sharpened and welded into one-inch pipe. The bit is 1-7/8 inches in diameter. Figure 17.3.5 shows the hose connection and swivel used while jetting. Water for the jetting pump should be taken from the second or farther pit from the well, allowing the first to serve as a settling basin.

In operating the drop hammer, slack in the rope should be taken up when the hammer is at rest. The spudder arm, rotating clockwise (truck in reverse gear), then lifts and drops the hammer once per revolution (Figure 17.3.6). The speed of rotation may be controlled by the throttle setting on the truck engine. The drop height may be shortened by using the spudder arm closer to the axle. As the pipe casing is driven down, more rope must be fed from the stake behind the truck cab. These operations require continuous attention by the driller.

By checking the cuttings in the drilling mud, the formation penetrated can be determined. Drill through the aquifer, noting the depth of the coarsest stratum, and remove the drill pipe and bit. Determine where the screen is to be placed, drive casting to the desired depth, insert a telescoping well point and drive to desired depth (Figure 17.3.7), and swedge (Figure 17.3.8).

Development and Sanitary Protection

The comments on development of hydraulic performance and the sanitary protection of completed wells as outlined in AID-UNC/IPSED Series Item No. 15, "Jetting Small Tubewells by Hand," are also appropriate to this Item.

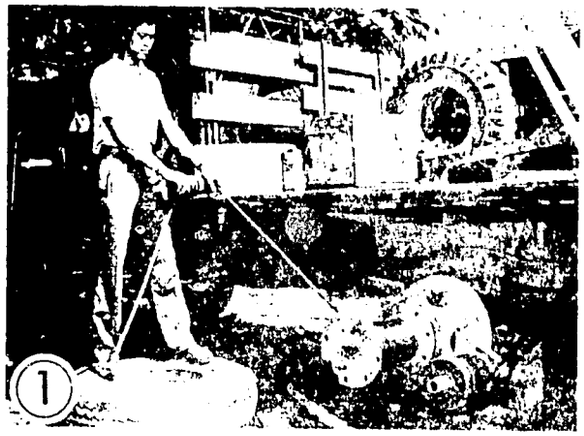

Driller operating the cathead & spudder arm. As drilling progresses the driller releases a little rope from around the stake.

Driver turns [illegible] about 60 kilograms and is [illegible] The driller at left is using the [illegible] Note: When using the cathead without the spudder arm the truck should be in a forward gear.

Bit made from a car spring sharpened & welded into one inch pipe. The bit is 1 7/8" in diameter.

Driller turns drill pipe so that drill cuts around hole.

FIGURE 17.3

OPERATION OF WELL DRILLING RIG

(CONTINUED ON NEXT PAGE)

FIGURE 17.3

OPERATION OF WELL DRILLING RIG

(CONTINUED FROM PRECEDING PAGE)

Drill pipe & hose connection

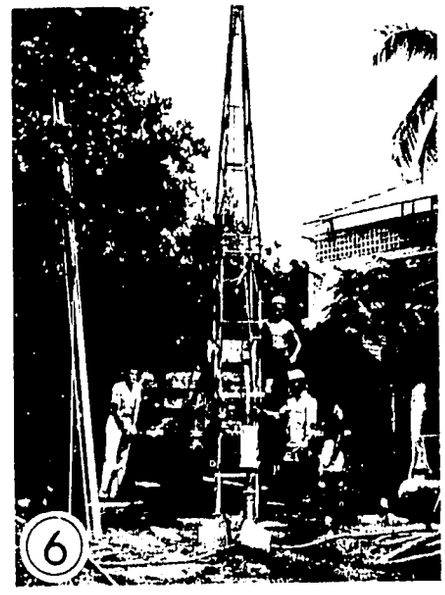

Marvin E. Miller operating setting-percussion rig. Two inch casing is being driven into the ground with the hammer.

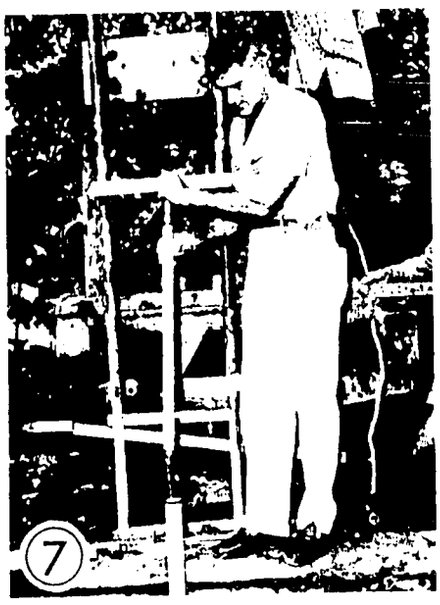

Marvin E. Miller inserting telescoping drive point.

Swedge being lowered to swedge lead packer on screen.

Performance

This rig has satisfactorily drilled several hundred 2-inch diameter wells in alluvial soils in Cambodia. It can be built, using homemade attachments, for less than US $100, exclusive of the cost of a light truck. Such a rig can drill 9-10 wells per month at an average depth of 100 feet (30 meters). It cannot drill through rock.

PRACTICAL HYDRAULICS FOR THE PUBLIC WORKS ENGINEER

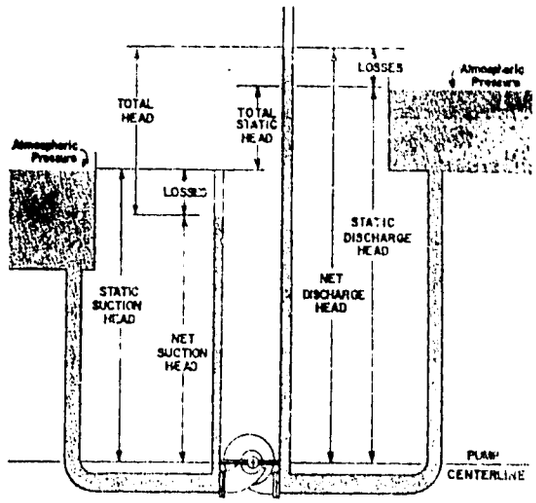

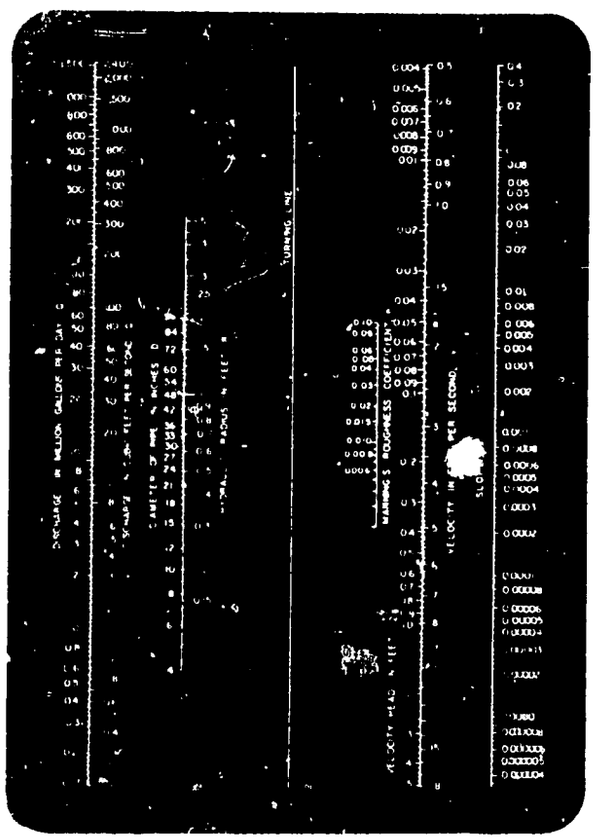

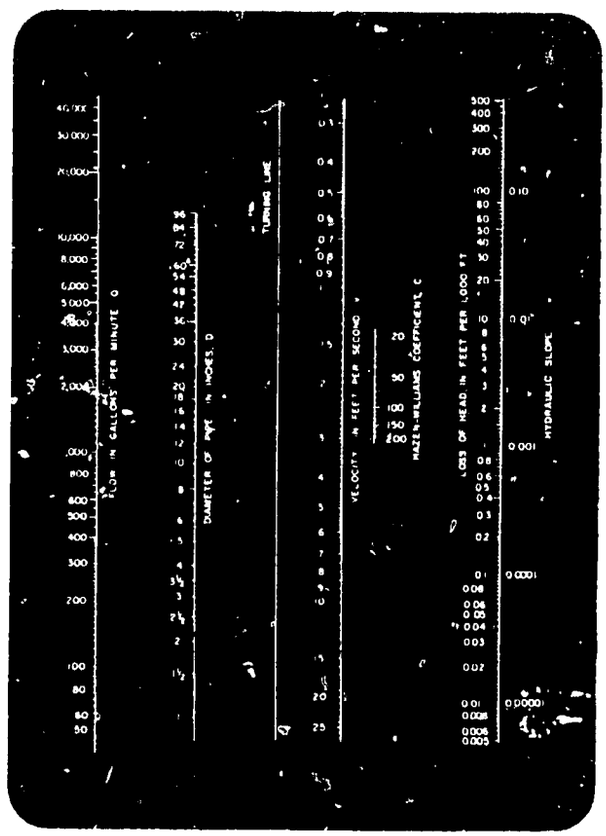

REPRINTED FROM PUBLIC WORKS MAGAZINE 200 SO. BROAD ST., RIDGEWOOD, N. J. 07451

Water Supply and Sanitation in Developing Countries

SPECIAL REPRINT

CONTENTS

2 Fluids at Rest

Static pressures of fluids and measuring instruments such as the Bourdon gage and the manometer are discussed. Formulas are given for force on submerged surfaces and internal pressures in pipes.

3 Fluid Properties

Definitions of density, specific weight, specific gravity and viscosity.

4 Fluids in Motion

Characteristics of laminar and turbulent flow and the meaning of steady and uniform flow are presented. The continuity equation, energy equation and force equation are discussed.

5 Flow in Closed Condiuts

Equations for relating flow, friction and pressure loss in pipes flowing full are presented and illustrated by examples. The Moody diagram, a nomograph for the Hazen-Williams formula, values of the Hazen-Williams friction coefficient and tables of minor losses due to resistance are included. Applications of their use are shown. Also considered are equivalent pipes, flow in pipe networks and water hammer.

12 Flow in Open Channels

Use of the Manning formula for design of sewers and small open channels is illustrated by examples and a nomograph. Values of "n" are tabulated. Hydraulic elements for partially filled circular sewers are presented and non-circular conduits are discussed.

15 Flow Measurement

Nomographs are given for determining flow in closed conduits with the Venturi meter, the orifice meter and the elbow meter. Use of weirs and the Parshall flume for flow measurement in open channels is described and illustrated with nomographs.

19 Pumps

Included are discussions of pump type and pump selection, head term definitions, power requirements, pump characteristic curves, system head curves and centrifugal pump relations as determined by specific speed.

Reprinted from the
September, October and November, 1968,
Issues of PUBLIC WORKS MAGAZINE

PRACTICAL HYDRAULICS FOR THE PUBLIC WORKS ENGINEER

PART ONE

F. E. McJUNKIN and P. A. VESILIND
Department of Environmental Sciences and Engineering, University of North Carolina, Chapel Hill, North Carolina

Design or analysis of almost any major public works project requires application of hydraulic engineering principles and procedures. Water supply and distribution, wastewater collection and disposal, drainage, flood control, irrigation, and navigation are ready examples. However, many engineers who are not involved daily in such tasks find that they require periodic, brief review to retain and sharpen their skills. Those engineers regularly involved in hydraulic work find personal collections of design aids and references useful. This review is an attempt to meet the needs of both groups in concise and useful fashion.

FLUIDS AT REST

Fluid Pressure

By pressure is meant the force exerted on a unit area. Pressure, P, exerted by a column of fluid is a function of the specific weight of the fluid, e.g., in pounds per cubic inch, and its height (depth) in inches, h.

$$P = wh$$

This relationship will hold for any consistent set of units. P, however, is frequently expressed in pounds per square inch, and h as feet of water. The specific weight w of water is 62.4 pounds per cubic foot. A convenient relationship between h and P, therefore, is:

$$P \text{ (psi)} = 0.433 \text{ h (ft.)}$$

The vertical distance h is usually termed the "head" of a liquid, or the "static head." The pressures discussed above are due to the weight of the liquid only. These pressures can be measured by an ordinary gage and therefore are termed gage pressures. Absolute pressure takes into account both the pressure exerted by the liquid and the pressure exerted by the atmosphere. The mean pressure of the atmosphere at sea level is usually assumed to be 14.7 lbs. per square inch, which is equivalent to a head of 33.9 feet of water. If a pressure is less than atmospheric, it is designated as a vacuum, and its gage reading is the difference between liquid and atmospheric pressure. A perfect vacuum corresponds to absolute zero pressure. The properties of liquids are not usually affected by atmospheric pressure and therefore most calculations are in terms of gage pressure. Gage pressure is sometimes denoted by psig and absolute pressure by psia. In this discussion, psi will be taken to designate gage pressure, unless otherwise indicated. These are illustrated in Figure 1.

The pressures exerted by liquid in a reservoir and pipe are shown in Figure 2. The liquid in this case is assumed to be at rest and the pressures shown are static pressures. It is important to note that the shape of the water column is not important, rather, it is the vertical distance between any point along the pipe and the surface of the reservoir which determines the static pressure in the pipe.

Measuring Instruments

Pressures are commonly measured by the Bourdon gage. This gage contains an elliptical curved tube which changes its curvature with changes in pressure. The free end of the tube rotates a dial hand through a linkage system.

A simple piezometer, shown in Figure 3, consists of a small tube rising from a container in which liquid is under pressure. The total height of the water in the piezometer (pressure measuring) tube denotes the pressure of the liquid. Piezometers can be used to measure both static pressures and pressures of flowing fluids.

Manometers are used to measure pressures when simple piezometers are inadequate. A simple manometer is shown in Figure 4. The manometer fluid is usually mercury although other fluids may be used depending on the range of pressures to be measured.

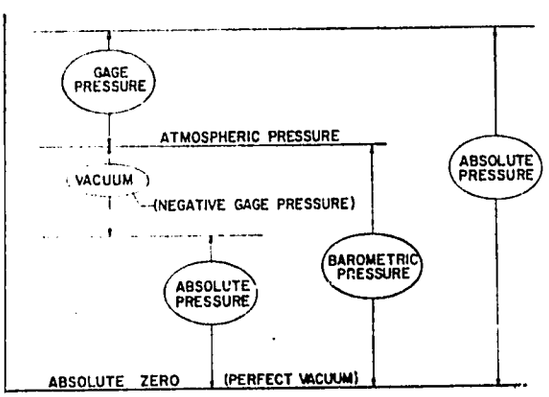

■ **FIGURE 1 (left) Pressure schematic.**

■ **FIGURE 2 (below). Static pressure exerted by water.**

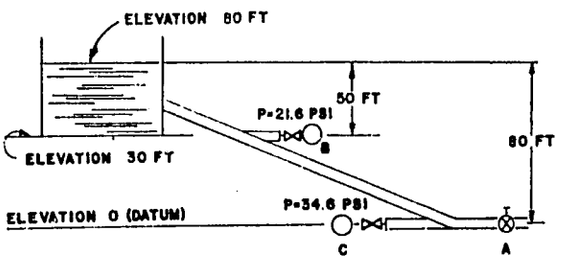

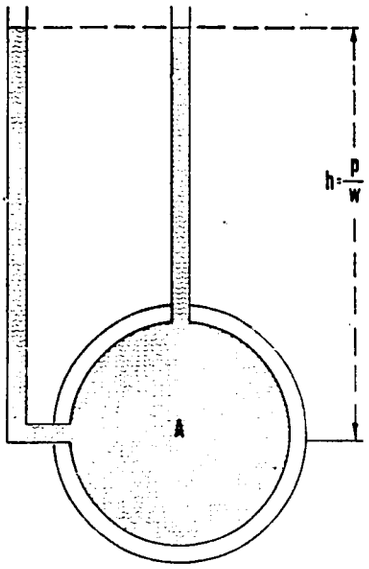

■ FIGURE 3. Simple Piezometer.

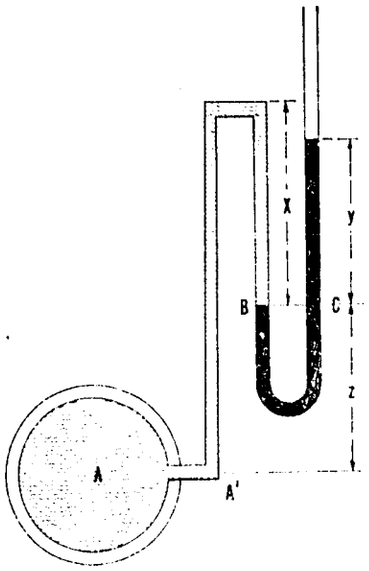

■ FIGURE 4. Simple manometer

By reading the difference in height (Y) of the manometer fluid in the two legs of the tube, the pressure inside the pipe (A) can be determined. A gage equation for this manometer can be written by beginning at the open end of the manometer and proceeding through the tube to point A', adding terms when descending a column, subtracting when ascending and equating the results to the head A. For the simple manometer shown the equation is:

DESCENDING IN TUBE:

Height of manometer fluid (Y + Z) times fluid specific weight (W) $+ (Y + Z)W$

ASCENDING IN TUBE:

Height of manometer fluid (Z) times fluid specific wt. (W) $-(ZW)$

Height of water (X) times specific weight (w) $-(Xw)$

DESCENDING IN TUBE:

Height of water (X + Z) times specific weight (w) $+ (X + Z)w$

$$P_A = + (Y + Z)W - ZW - Xw + (X + Z)w$$

$$P_A = YW + Zw$$

or in terms of feet of water,

$$\frac{P_A}{w} = Ys + Z$$

where s = specific gravity of manometer fluid.

Gage equations for other manometers may be similarly written.

FLUID PROPERTIES

The *density* of a fluid is its mass per unit volume. In the English system, density is expressed as slugs per cubic foot, or as lb-sec^2/ft^4. Density in the metric system is in terms of grams per cubic centimeter. The density of water under standard conditions is 1.94 in the English system and unity in the metric system.

Specific weight represents the force exerted by gravity on a unit volume of fluid and therefore must be in terms of force per unit volume, such as pounds per cubic foot. The specific weight is related to density as $w = \rho g$. The specific weight of water is 62.4 pounds per cubic foot.

Specific gravity of a liquid is the ratio of its density to that of pure water at a standard temperature. In the metric system the density of water is one gram per cubic centimeter and hence the specific gravity has the same numerical value as the density.

The *viscosity* of a fluid is a measure of its resistance to shear or angular deformation and is defined as the proportionality constant relating the shear stress τ to the rate of deformation du/dy. This proportionality constant is usually written as $\tau = \mu \frac{du}{dy}$. The assumption inherent in this definition is that the shear stress is directly proportional to the rate of deformation. Such a definition holds for many fluids, which are known as Newtonian fluids. Fluids for which the shear stress is not proportional to the shear rate are known as non-Newtonian fluids. An example of a non-Newtonian fluid is biological sludge. The term viscosity, when applied to biological sludge, is therefore significant only if either the rate of deformation or the shear stress is also specified.

In the metric system, a unit of viscosity is a poise, with units of grams per centimeter-second. Most fluids have low viscosity and a more convenient unit is the centipoise or 0.01 poise. The viscosity of water at 68.4° F is 1 centipoise. In the English system the unit of viscosity is pound seconds per square foot. One lb-sec/ft^2 equals 479 poise.

Kinematic viscosity is defined as the absolute viscosity, μ, divided by the density of the fluid, or $\nu = \mu/\rho$. The dimensions of kinematic viscosity are square centimeters per second. Fluid viscosity is a function of temperature. Table 1 is illustrative.

Table 1—Viscosity of Water

Temperature °F	Viscosity lb.-sec./ft.^{2}	Viscosity Centipoise
40	3.1×10^{-5}	1.5
50	2.7×10^{-5}	1.3
60	2.3×10^{-5}	1.1
68.4	2.1×10^{-5}	1.0
70	2.0×10^{-5}	0.96
80	1.8×10^{-5}	0.86
90	1.6×10^{-5}	0.77

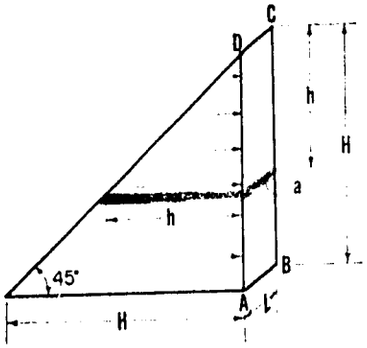

■ **FIGURE 5. Forces exerted by water on a vertical plane surface.**

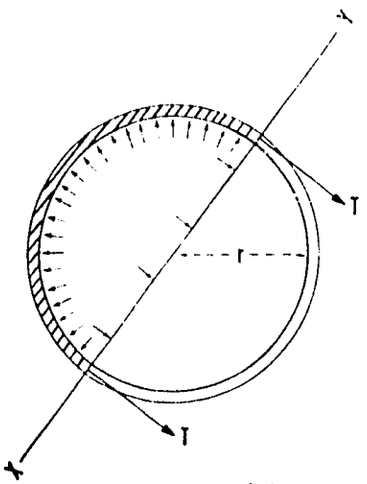

■ **FIGURE 6. Internal pipe pressure.**

Force on Submerged Surfaces

Previously, the force on the bottom of a vessel was shown to be due to the weight of the liquid, or equal to w times h. Considering the vertical plane ABCD in Figure 5 as the side of a vessel one unit wide, the force on a small element a is equal to w times h since the force on a submerged surface is equal regardless of the direction. The total force on plane ABCD, L units wide, must then be equal to the sum of all the unit elements a, or $\frac{1}{2}H^2wL$.

The line of action of the total resultant force passes horizontally through the center of gravity of the triangular wedge. The point at which this line of action intersects the area is called the center of pressure. Considering the plane ABCD as being a dam holding back water, the resultant force tending to overturn this dam would act through the center of pressure, and create a moment about the line AB. This moment could be calculated as

$$M = 1/2H^2wL(1/3H)$$

Internal Pressure Exerted

Consider a cross-section of pipe (see Figure 6) through which a plane XY is passed. The total force tending to rupture this pipe along plane XY is equal to $2rLP$ where P is the internal pressure, r is the radius of the pipe and L the length. This force is resisted by the tension in the pipe wall, T, and $2T = 2rLP$. If the thickness of the wall is designated by t and its tensile stress by S, then $T = StL$. Hence, $St = Pr$. Knowing the pressure, the pipe radius, and allowable stress, the proper wall thickness may be determined. Or, for known wall thickness, pipe diameter, and allowable stress, the maximum allowable pressure can be found.

FLUIDS IN MOTION

Laminar and Turbulent Flow

There are two distinctly different types of fluid flow: laminar and turbulent. Laminar flow is characterized by absence of irregular eddies or fluctuations in the fluid. Fluid particles in laminar flow move in definite observable streamlines or paths. Laminar flow in practical hydraulics is rare.

Turbulent flow is characterized by irregular motion of a large number of particles and erratic paths followed by any single particle. The fluid particles exhibit no definite frequency and no observable pattern. Turbulent flow is encountered in almost all practical hydraulics.

Laminar flow can often be converted to turbulent flow if physical obstacles are put into the flow stream. The change from laminar to turbulent flow is often characterized by presence of a brief "transition region" in which the flow fluctuates as turbulence builds up. The conversion from laminar to turbulent flow can be demonstrated by injecting a dye in a pipe in which water is flowing. This is illustrated in Figure 7.

Steady and Uniform Flow

By "steady flow" is meant that the flow characteristics at any one point along the flow path do not change with *time*. "Uniform flow" means that the flow conditions do not change with respect to *space*. Both of these definitions must be modified to be applicable to turbulent conditions and it is usually assumed that by "steady flow" is meant "mean steady flow," that on the average, conditions do not change with time. Similarly by "uniform flow" is meant "mean uniform flow."

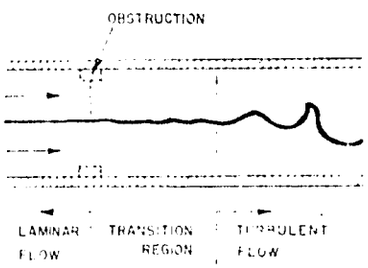

■ **FIGURE 7. Transition from laminar to turbulent flow.**

If the flow rate in a straight pipe flowing full is changing, the flow is uniform along the pipe, but unsteady. Since both steady and uniform flow can exist independently of each other, four combinations are possible.

Continuity Equation

Consider a converging conical pipe in which fluid is flowing from the large end to the small. At the large end, the cross-section area is A_1, the velocity of water is V_1. At the small end, area A_2, the velocity has to be greater to compensate for the smaller area. The flow rate Q at both has to be equal, or $Q_1 = Q_2 = A_1V_1 = A_2V_2$ for steady noncompressible flow. For compressible flow the weight of the fluid flowing past one point has to equal the weight flowing past another point, and in this case the continuity equation is $W = AVw$, in which w is specific weight.

Energy Equation

One of the fundamental principles of hydraulics states that in a system, the total energy of a perfect liquid under ideal conditions does not change as it flows from point to point. Total energy is the sum of the position energy, pressure energy, and velocity energy. These energies are usually stated in terms of feet of fluid, so that position energy is static head z, pressure energy is fluid pressure P/w, and the velocity energy is velocity head $V^2/2g$.

Consider a system such as is shown on Figure 8. Water is flowing through this pipe from a reservoir with constant surface elevation, and assuming there are no losses in this system, it is obvious that the total energy or the total head of water

remains constant, although the form of the energy or head of water is converted from one type of energy to another. For example, at point 1, at the surface of the reservoir, all the energy is static head, while at points 3, 4, and 5, the energy is distributed among static, pressure and velocity head. At point 6, the energy of the jet, as it enters the atmosphere, is made up of only the velocity head and the static head. The total energy, however, is constant at all points in the system.

This is the constant energy principle, commonly known as Bernoulli's Theorem, which if written between any two points in a system is:

$$Z_1 + \frac{P_1}{w} + \frac{V_1^2}{2g} = Z_2 + \frac{P_2}{w} + \frac{V_2^2}{2g}$$

This equation holds for an ideal fluid, in which no losses occur. In real systems, however, the flow of a fluid is always accompanied by a loss of energy. Taking into account losses occurring in any system between two points, the equation is:

$$Z_1 + \frac{P_1}{w} + \frac{V_1^2}{2g} = Z_2 + \frac{P_2}{w} + \frac{V_2^2}{2g} + h_L$$

in which h_L represents the energy losses within the system.

The energy loss may occur in many places in a system, such as valves, bends and sudden changes in pipe diameter. One of the major losses of energy is in the friction between the moving fluid and the pipe wall.

Figure 9 shows a system similar to the ideal system previously discussed, but now the energy losses are considered. The total energy of the system decreases, so that at the discharge, a total loss of h_L feet of water has occurred. This energy loss is not recoverable. The line connecting all points of total energy is called the "energy gradient" and must always decrease in the direction of flow, unless external energy is added to the system as, for example, with a pump.

The "hydraulic gradient" is defined as the line which connects the level of static and pressure energies, or the heights at which water in piezometric tubes would rise. The hydraulic gradient may increase in the direction of flow if velocity head is converted to pressure head. The relationship between the energy and hydraulic gradients is:

$$\begin{pmatrix}\text{Energy}\\ \text{Gradient}\end{pmatrix} - \begin{pmatrix}\text{Hydraulic}\\ \text{Gradient}\end{pmatrix} = \frac{V^2}{2g}$$

The total available head for the system shown in Figure 9 is H_T.

Force Equation

The force exerted on a free body by a stream of fluid is $F = \rho QV'$. F is the force and V' is the velocity component perpendicular to the body. The reaction force of a jet of water, in which V' is simply the jet velocity, is obviously $F = \rho QV$. Force and momentum equations are important in design of hydromachinery, determination of reactions at bends, and in analysis of channel stability.

FLOW IN CLOSED CONDUITS

A basic public works engineering problem is the conveyance of water by means of a flow channel—either closed or open. Despite the commonplace nature of this problem, design methods for its solution are still largely empirical. Dimensional requirements establish the current flow function to be of the form

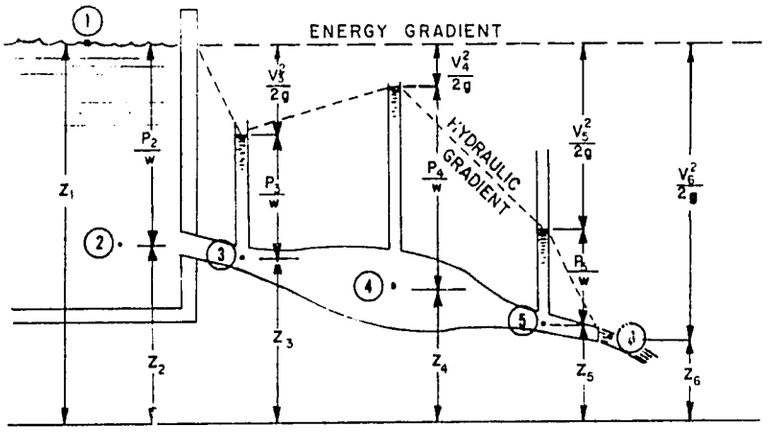

■ FIGURE 8. Characteristics of ideal flow.

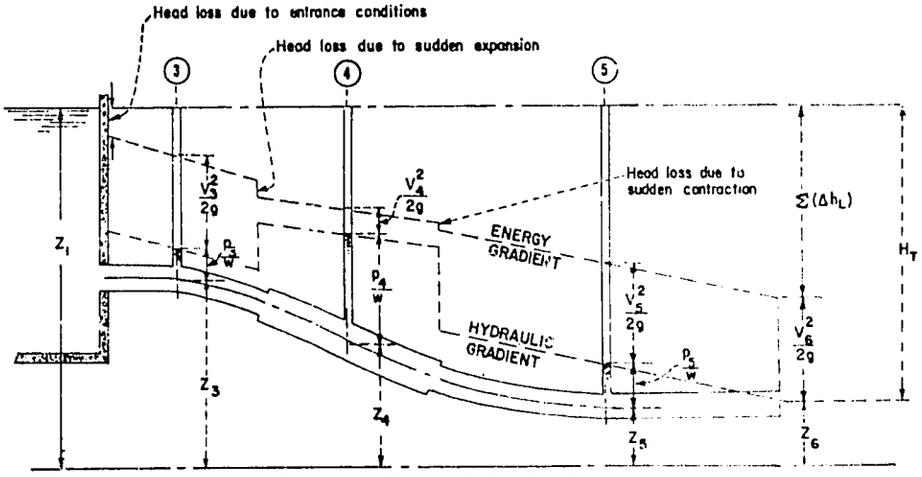

■ FIGURE 9. Characteristics of realistic flow.

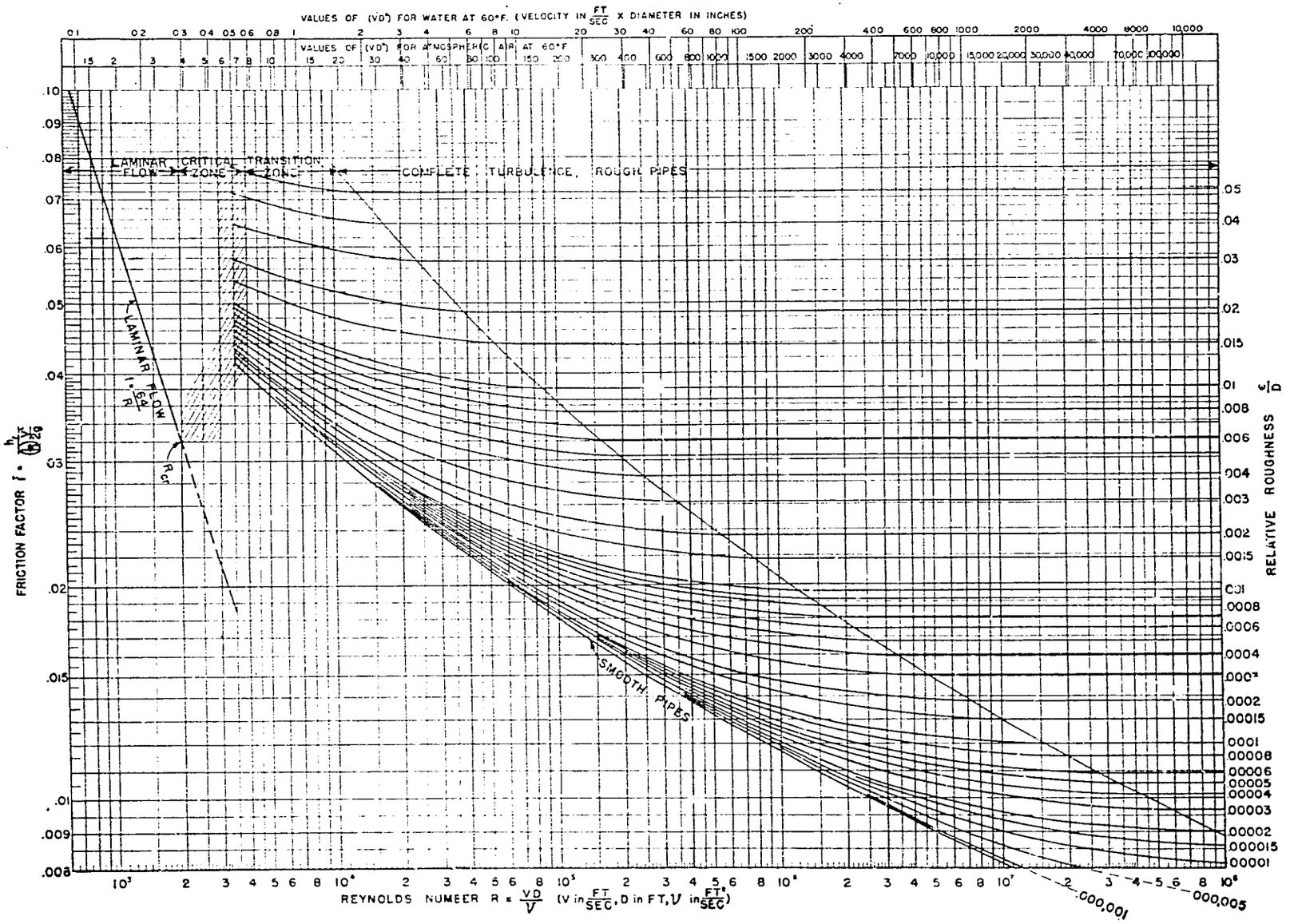

FIGURE 10. The Moody diagram.

Table 2—Equivalent Sand Roughness

Pipe Material	ε (feet)
Riveted steel, few rivets	0.003
Riveted steel, many rivets	0.030
Concrete, finished surface	0.001
Concrete, rough surface	0.010
Wood-stave, smooth surface	0.0006
Wood-stave, rough surface	0.003
Cast iron, new	0.00085
Galvanized iron, new	0.00050
Asphalted cast iron, new	0.00040
Commercial steel, new	0.00015
Wrought iron, new	0.00015
Drawn tubing, new (glass, brass, copper, lead)	0.000005*

*essentially "smooth"

known as the Darcy - Weisbach equation:

$$h_f = f \frac{L}{d} \cdot \frac{V^2}{2g}$$

where h_f is the head loss in a pipe of length L and diameter d through which a fluid is transported at mean velocity V; g is the acceleration of gravity; and f is a dimensionless friction factor influenced by viscosity, gravity, wall roughness, and to a negligible extent in these problems, surface tension and fluid compressibility.

Because of the complex nature of the friction factor function, various attempts have been made to group all roughness dimensions into a single representative dimension, the most widespread being the "equivalent sand-grain diameter," ε, of Nikuradse. Representative values are given in Table 2. On the basis of a large number of experiments on resistance in commercial pipes, Moody published a set of curves in a single diagram (Figure 10) that describes the relation between the friction factor f, the relative roughness, ε/D, and the Reynolds number. The "Moody Curves" have been popularized by their inclusion in nearly all modern texts on fluid mechanics.

An example illustrates usage of the Moody curves.

GIVEN: A smooth-walled concrete pipe is required to carry 10 cfs a distance of 5000 ft. with a maximum head loss of 5 ft.; water temperature is 60° F.

FIND: Minimum pipe diameter

SOLUTION: From Table 2,

$\varepsilon = 0.001$ ft.

Try D = 24 inches; then

$$V = \frac{Q}{A} = \frac{10 \text{ cfs}}{\pi (1 \text{ ft})^2} = 3.18 \text{ fps}$$

and $VD'' = (3.18)(24) = 76.3$

and $\frac{\varepsilon}{D} = \frac{0.001 \text{ ft.}}{2.0 \text{ ft.}} = 0.0005$

From Figure 10, $f = 0.0177$

$$h_f = \frac{(0.0177)(5000)(3.18)^2}{(2)(2)(32.2)}$$

$h_f = 7.0$ ft. > 5 ft

Try D = 27 inches;

then $V = \frac{10}{\pi (1.13)^2} = 2.5$ fps

and $VD'' = (2.5)(27) = 68$

and $\frac{\varepsilon}{D} = \frac{0.001}{2.25} = 0.00044$

From Figure 10, $f = 0.0174$

$$h_f = \frac{(0.0174)(5000)(2.5)^2}{(2.25)(2)(32.2)}$$

$h_f = 3.8$ ft < 5 ft

ANSWER: Use diameter of 27 inches.

In this example, the procedure involves solving for VD'', which represents the abscissa at the top of the chart and ε/D, the right-hand ordinate. A vertical line from the value found for VD'' is followed to the intersection of the curve corresponding to the value found for ε/D. From this point of intersection, a horizontal line is followed to the left-hand ordinate to find the corresponding value of f. The Darcy-Weisbach equation may then be solved for h_f.

The Darcy-Weisbach equation is not widely used in public works practice. Because the relative roughness ε/D is a key to f, trial and error solution is required. Also additional diagrams are required for partially filled and noncircular sections. Because of these practical shortcomings, engineers have resorted to fitted exponential equations for flow calculations. Among these, the Hazen-Williams formula is most widely used in the United States for flow in pressure pipes and the Manning formula for flow in open channels or pipes not flowing full. These formulas are limited to turbulent flow of water and to common ambient temperatures.

The Hazen-Williams formula is:

$$V = 1.318 \ C \ r^{0.63} s^{0.54}$$

in which V is the mean velocity of flow in feet per second, r is the hydraulic radius (area divided by wetted perimeter) in feet, s is the slope of the hydraulic grade line, and C is the Hazen-Williams friction coefficient. Combined with the continuity equation, $Q = AV$, the formula for discharge, Q, in gallons per minute for circular pipe of diameter d, in inches, is

$$Q = 0.285 \ C d^{2.63} s^{0.54}$$

The nomograph shown as Figure 11 is a solution of the above equation. Table 3 summarizes Hazen-Williams coefficients for various pipe materials.

Example Problem:

GIVEN: The pressure drop through a 6-inch asbestos-cement pipe, 3,000 feet in length is 20 psi.

FIND: The flow through the pipe.

SOLUTION: 20 psi × 2.31 feet of water/psi = 46.2 feet of head loss (h_f). 46.2 feet / 3000 feet = 15.4 feet/1000 feet (s). From Table 3, the Hazen-Williams coefficient is 140. From the Hazen-Williams

Table 3—Values of "C" for Hazen-Williams Formula

Type of Pipe	C
Asbestos Cement	140
Brass	130-140
Brick Sewer	100
Cast Iron	
New, Unlined	130
Old, Unlined*	40-120
Cement Lined	130-150
Bitumastic Enamel Lined	140-150
Tar Coated	115-135
Concrete or Concrete Lined	
Steel forms	140
Wooden forms	120
Centrifugally Spun	135
Copper	130-140
Fire Hose (Rubber Lined)	135
Galvanized Iron	120
Glass	140
Lead	130-140
Masonry Conduit	120-140
Plastic	140-150
Steel	
Coal-Tar Enamel Lined	145-150
New Unlined	140-150
Riveted	110
Tin	130
Vitrified	100-140
Wood Stave	120

*See "Hydraulic Tables," by G. S. Williams and A. Hazen, Wiley, New York.

Table 4—Minor Losses of Head as $V^2/2g$

Nature of Special Resistance	Loss K
Angle Valve	
Wide Open	2.5
Butterfly Valve	
$\theta = 10°$	1
$\theta = 40°$	10
$\theta = 70°$	320
Check Valves	
Horizontal Lifts	8-12
Ball	65-70
Swing	0.6-2.5
Gate Valves	
Wide Open	0.2
1/4 Closed	1.2
1/2 Closed	5.6
3/4 Closed	24.0
Globe Valves	
Wide Open	10
90° Elbow	
Regular Flanged	0.21-0.30
Long Radius Flanged	0.14-0.23
Short Radius Screwed	0.9
Medium Radius Screwed	0.75
Long Radius Screwed	0.60
45° Elbow	
Use 3/4 of Loss for 90° Bend of Same Radius	
22 1/2° Elbow	
Use 1/2 of Loss for 90° Bend of Same Radius	
Entrance Losses	
Pipe Projecting into Tank	0.8-1.0
End of Pipe Flush with Tank	0.5
Slightly Rounded	0.23
Bell Mouthed	0.04
Outlet Losses	
From Pipe into Still Water or Atmosphere	1.0
Sudden Contraction	
d/D = 1/4	0.42
d/D = 1/2	0.33
d/D = 3/4	0.19
Sudden Enlargement	
d/D = 1/4	0.92
d/D = 1/2	0.56
d/D = 3/4	0.19

nomograph, Figure 11, the discharge is 460 gpm. If the flow had been given, the head loss could be found in reverse manner.

Minor Losses Due to Resistance

Energy or head is lost at the entrance to a pipe or conduit: at valves, meters, fittings, and other irregular features, at enlargements and at flow contractions. These losses, called "minor losses," are in excess of friction losses over the same length of straight pipe or conduit, and can be expressed as:

$$h_L = K \frac{V^2}{2g}$$

for which values of K may be estimated using Table 4.

Example Problem:

GIVEN: The loss for a flow of 1.0 cfs through a given 6-inch main with a gate valve wide open is 20 ft.

FIND: The head loss with the gate valve 3/4 closed.

SOLUTION: From Table 4, the increase in K value when the valve is partially closed is 24.0 − 0.2 = 23.8 (Difference in K for 3/4 closed and fully open).

$$V = \frac{Q}{A} = \frac{1.0 \text{ cfs}}{0.20 \text{ sf}} = 5.0 \text{ fps}$$

Table 5—Minor Losses of Head as Equivalent Lengths

Nature of Special Resistance	Loss in Pipe Diameters
Angle Valve	
Open	170
Check Valve	
Swing Type, Open	80
Gate Valve	
Wide Open	7
1/4 Closed	40
1/2 Closed	200
3/4 Closed	850
Globe Valve	
Open	340
Standard Elbow	32
Long Swing Elbow	20
45° Elbow	15
Tee	
Flow Through Run	20
Flow Side to Run or Run to Side	
No Throat	65
With Throat	45
Lateral	45
Sudden Contraction	
d/D = 1/4	15
d/D = 1/2	12
d/D = 3/4	7
Sudden Enlargement	
d/D = 1/4	32
d/D = 1/2	20
d/D = 3/4	7

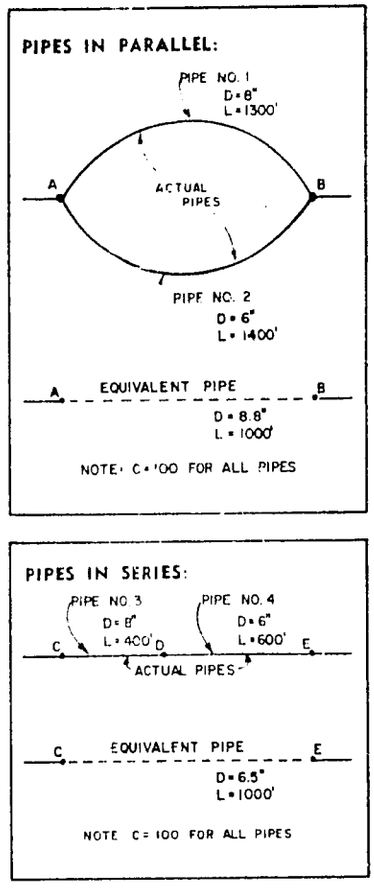

■ **FIGURE 12. Equivalent pipes.**

$$h_L = h_o + K\,(V^2/2g)$$
$$= 20 \text{ ft.} + (23.8)\,(5.0)^2/(64.4)$$

ANSWER: $h_L = 29.2$ feet.

For many calculations, it is convenient to measure minor losses in terms of equivalent lengths of straight pipe. These equivalent lengths are added to the actual length. For example, the resistance of a 6-inch standard elbow to the flow of water through it is the same as the resistance of approximately 32 pipe diameters or 16 ft. of straight 6-in. pipe. Therefore, if in a 6-in. line 30 ft. long there are two standard elbows, the equivalent length of line is 30 + (6/12) 32 + (6/12) 32 or 62 feet, and this length can be used in computing head loss of flow. Table 5 shows equivalent pipe length for other minor losses.

Equivalent Pipes

Two pipes, two systems of pipes, or a single pipe and a system of pipes are said to be equivalent when their losses of head for equal rates of flow are equal. (Or flow is equal for equal loss of head). Compound

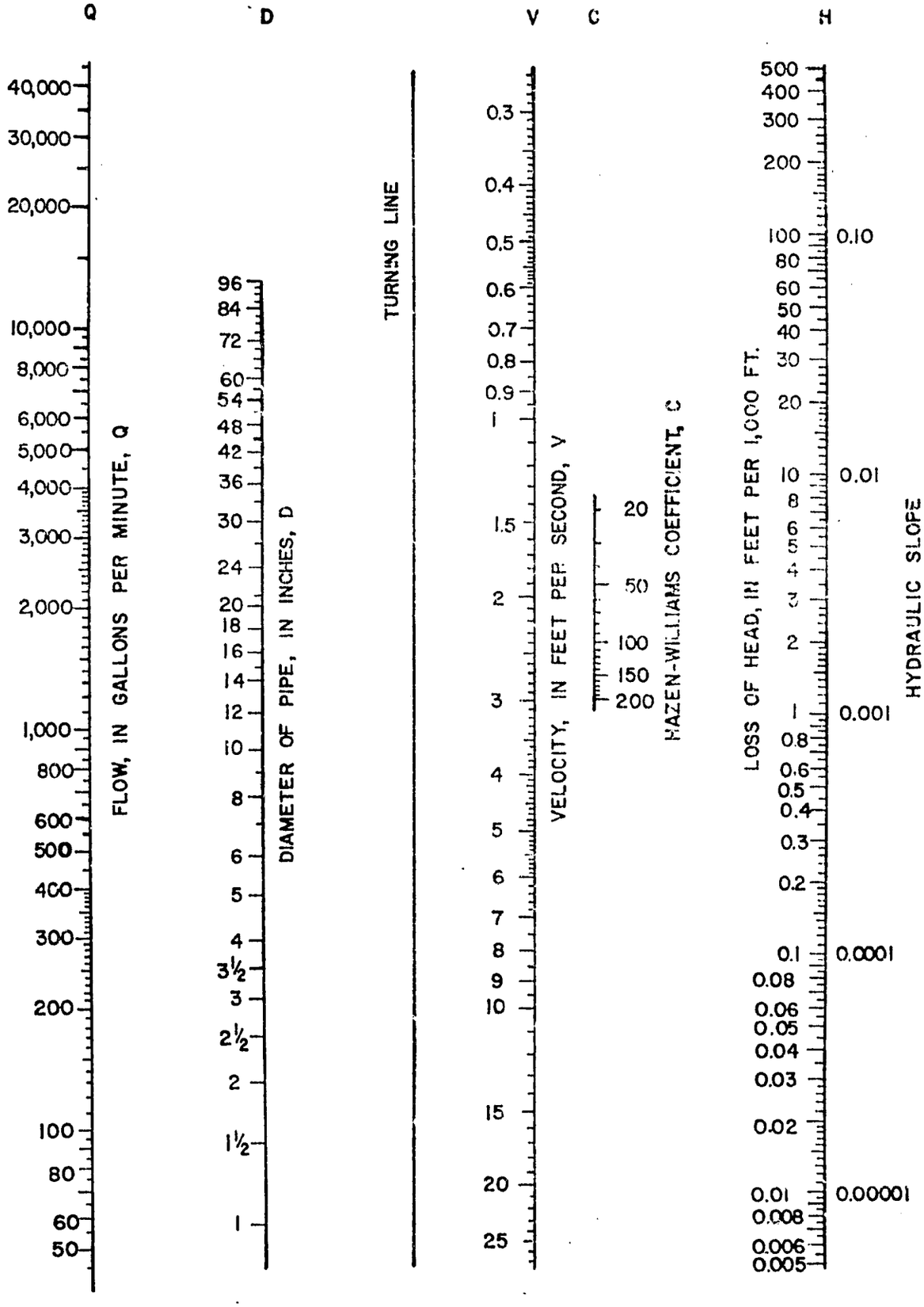

■ FIGURE 11. Nomograph for solution of the Hazen-Williams formula. For solution in metric units, see Figure 36.

pipes, whether in parallel or in series (Fig. 12), can be reduced to single, equivalent pipes. The following examples are illustrative:

Example of equivalent pipe for pipes in parallel:

GIVEN: Parallel pipes as shown in Figure 12.

REQUIRED: Diameter of Equivalent pipe (length = 1000 feet assumed).

SOLUTION:

1. Loss of head through Pipe #1 must always equal loss of head through Pipe #2 between points A and B.

2. Assume any arbitrary head loss, say 10 feet.

3. Calculate head loss in feet per 1000 feet for pipes #1 and #2.

$$\#1: \frac{10}{1300} \times 1000 = 7.7 \text{ ft./1000 ft.}$$

$$\#2: \frac{10}{1400} \times 1000 = 7.1 \text{ ft./1000 ft.}$$

4. Use Figure 11 to find flow in gallons per minute.

#1: D = 8 in., s = 0.0077, Q = 495 gpm

#2: D = 6 in., s = 0.0071, Q = 220 gpm

Total Q through both pipes = 715 gpm

5. Using Figure 11 with s = 0.010 and Q = 715 gpm, equivalent pipe size is found to be 8.8 in. diameter.

Example of equivalent pipe for pipes in series:

GIVEN: Pipes in series as shown in Figure 12.

FIND: Diameter of equivalent pipe (length = 1000 feet assumed).

SOLUTION:

1. Quantity of water flowing through pipe #3 and pipe #4 is the same.

2. Assume any arbitrary flow through pipes #3 and #4, say 500 gpm.

3. Using Figure 11, find head loss for pipes #3 and #4.

#3: D = 8 in., L = 400 ft., Q = 500 gpm.

$h_L = 0.4 \times 8.0 = 3.2$ ft.

#4: D = 6 in., L = 600 ft., Q = 500 gpm.

$h_L = 0.6 \times 33.0 = 19.8$ ft

Total head loss in both pipes = 23.0 ft

4. Using Figure 11, with head loss = 23.0 ft/1000 ft and Q = 500 gpm, the equivalent pipe size is found to be 6.5 inches diameter.

More complex systems can be reduced to a single equivalent pipe by piecework conversion of real and equivalent pipes.

Flow in Pipe Networks

Although the calculations become tedious, solution of network flow problems is dependent on the same basic physical principles as for single pipes, that is, the principles of energy conservation and continuity must be satisfied throughout the network. In general, a series of equations can be written for the network as follows: At each pipe junction: $\Sigma Q = O$ and around each closed circuit: $\Sigma H = O$.

Usually a sufficient number of independent equations of these two types can be set up and solved simultaneously for the unknowns. However, for complex networks, algebraic solution is impractical.

The most common method for systematic solution of distribution networks is the relaxation or controlled trial and error method developed by Hardy Cross. This method is well suited for solution by hand, and is easily adapted for machine computation.

The loss of head in pipe may be represented by $H = KQ^n$, where for a given pipe, K is a numerical constant depending on C, d and L; Q is the flow; and n is a constant exponent for all pipes (for the Hazen-Williams formula, $n = 1.85$).

Considering for the moment a single circuit, for each pipe:

$$Q = Q_o + \Delta$$

where Q is the corrected flow, Q_o is the assumed flow and Δ is the flow correction. Then,

$$KQ^n = K(Q_o + \Delta)^n$$
$$= K(Q_o^n + nQ_o^{n-1}\Delta + \ldots)$$

If Δ is small relative to Q_o, the remaining terms in the expansion may be neglected.

Since for each pipe, $H = KQ^n$, and for the circuit, $\Sigma H = O$, then

$$\Sigma KQ^n = O, \quad O = \Sigma KQ_o^n + KnQ_o^{n-1}\Delta$$

and Δ = correction

$$= \frac{-\Sigma KQ_o^n}{n\Sigma KQ_o^{n-1}} = \frac{\Sigma H}{n\Sigma(H/Q)}$$

The necessary formulations are made algebraically consistent by arbitrarily designating clockwise flows and associated head losses as positive, counter clockwise as negative. Assumed flows must sum to zero at each pipe junction. The originally assumed flows are corrected and the procedure repeated. Note that pipes common to two circuits receive two corrections, one for each circuit. The procedure is repeated until the corrections are negligible, thereby indicating a hydraulic balance has been reached. Solution (Table 6) of the two-circuit network shown in Figure 13 illustrates the procedure. The last column shows the final answers.

The friction loss from point D to point G is the algebraic sum of the friction losses along any continuous route between two points. For path D-E-F-G, the losses are 13 ft. plus 22 ft. less 1 ft. or 34 ft. Other routes from D to G incur identical total friction loss. The difference in gage pressure readings at D and G would be 34 ft., if corrected for any elevation difference.

For a given system where the head loss is known, the flows can be balanced by correcting assumed heads. High speed digital computers can be programmed to solve network problems in a number of ways, the classical Newton-Raphson method being the principal alternative to the Hardy Cross method. Electric analyzers or analog computers are in use in several cities and universities.

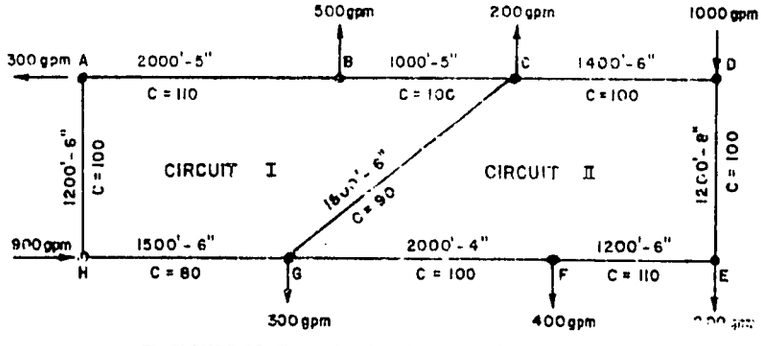

FIGURE 13. Example of a pipe network problem.

Water Hammer

Water hammer in a pipeline is caused by a sudden stoppage of flow, due either to valve closure or loss of power in force mains, and is characterized by loud noise and vibration. Since water is an essentially incompressible fluid, the energy from a suddenly stopped flow is transferred to the pipe wall which expands under pressure. As a result, shock waves are set up with n a system and, if sufficiently severe, will destroy equipment, instruments, and possibly the pipeline itself.

Consider a system such as shown in Figure 14 and assume that the flow has been stopped instantaneously by closing the valve. Element 1, next to the valve, will be compressed with a resultant stretching of the pipe and pressure rise. Element 2, which is still in motion, will "pile up" on element 1, cease forward motion, and in turn be compressed by the remaining water in the pipe, with a resultant increase in pressure. In that manner, as succeeding elements are compressed, pressure will increase in the pipe until the wave reaches the reservoir where it is dissipated. The water in the pipe, however, is under great pressure, and this must be released by a negative pressure wave originating at the reservoir, which, as it reaches the valve, will have imposed a negative pressure on the pipe,

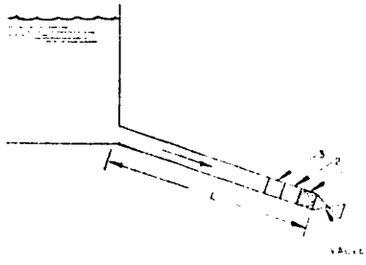

■ **FIGURE 14. Water hammer in pipe due to valve closure.**

tending to collapse the pipe. This again causes a positive pressure wave which originates at the valve and travels to the reservoir. These waves will finally be dissipated by friction. The arrival of the waves at the valve causes the loud noise and vibrations which characterize water hammer.

The velocity of a pressure wave in a medium is equal to the velocity of sound. Due to the elasticity of the pipe, however, the velocity of a pressure wave in a closed conduit is less than sonic velocity. The pressure caused by a sudden closure of the valve is a function of the velocity of the pressure wave as well as the original velocity in the pipe. The total pressure at the valve immediately after closure is then the sum of the original static pressure and the pressure caused by the sudden closure.

The time required for a pressure wave to travel from the valve to the reservoir and back again is $T = 2L/u$, where L is the length of the pipe and u is the velocity of the pressure wave. If the valve is completely closed before the first pressure wave has had time to reach the reservoir and return to the valve, the closure is called "rapid closure" and the pressure is estimated from the formula $P = \rho uV$. If the time of closure is greater than T, however, negative and positive waves will be superimposed on each other as they travel in the pipe. The latter is known as "gradual closure." A number of formulas have been proposed for estimating the pressure rise for gradual closures, but all tend to underestimate, since it is conceivable that any number of positive or negative waves will by chance be superimposed at one specific time and place in the system, thereby creating enormous pressures and causing pipe failure. The prediction of these waves is further complicated by the presence of discontinuities, such as flow meters, changes in pipe diameter, etc., which not only transmit the pressure waves, but also reflect some part of the wave. Computer programs are available for analyzing effects of water hammer and should be utilized whenever water hammer could cause serious damage.

Table 6—Analysis of the Network of Figure 13 by Method of Balancing Heads

CIRCUIT	NETWORK				ASSUMED FLOWS					FIRST CORRECTION					SECOND CORRECTION				
	PIPE	L	D	C	Q_0	S_0	H_0	H_0/Q_0	Δ_0	Q_1	S_1	H_1	H_1/Q_1	Δ_1	Q_2	S_2	H_2	H_2/Q_2	FINAL Q
I	AB	2000'	5"	110	+200	12.5	+25	0.125	+20	+220	14.5	+29	0.132	0	+220	14.5	+29	0.132	+220
	BC	1000'	5"	100	-300	32	-32	.107	+20	-280	28	-28	.100	0	-280	28	-28	.100	-280
	CG*	1800'	6"	90	0	0	0	0	+20-60	-40	0.4	-0.7	.017	0-25	-65	0.9	-1.6	.025	-60
	GH	1500'	6"	80	-400	33	-50	.125	+20	-380	30	-45	.118	0	-380	30	-45	.118	-380
	HA	1200'	6"	100	+500	33	+40	080	+20	+520	36	+43.2	083	0	+520	36	+43.2	083	+520
	TOTALS (Σ)						-17	0.437				-1.5	0.450				-2.4	0.458	
	CORRECTIONS				$\Delta_0 = -\frac{(-17)}{(1.85)(0.437)} = +21$ SAY +20					$\Delta_1 = -\frac{(-1.5)}{(0.450)(1.85)} = +1.8$ SAY 0					$\Delta_2 = \frac{(-2.4)}{(1.85)(0.458)} = +2.83$ SAY 0				
II	CD	1400'	6"	100	-500	3.3	-46	0.092	+60	-440	2.7	-38	0.086	+25	-415	2.4	-33.6	0.081	-420
	DE	1200'	8"	100	+500	8.3	+10	.020	+60	+560	10	+12	.024	+25	+585	11	+13.2	0.23	+590
	EF	1200'	6"	110	+300	11.0	+13	043	+60	+360	15	+18	050	+25	+385	18	+21.6	056	+380
	FG	2000'	4"	100	-100	12.0	-24	.240	+60	-40	2.3	-4.6	.115	+25	-15	0.4	-0.8	053	-20
	GC*	1800'	6"	90	0	0	0	0	+60-20	+40	0.3	+0.5	.013	+25+0	+65	0.9	+1.6	.025	+60
	TOTALS (Σ)						-47	0.395				-12.1	0.288				+2.0	0.238	
	CORRECTIONS				$\Delta_0 = -\frac{(-47)}{(1.85)(0.395)} = 64.3$ SAY +60					$\Delta_1 = -\frac{(-12.1)}{(1.85)(0.288)} = +22.7$ SAY +25					$\Delta_2 = -\frac{(+2.0)}{(1.85)(0.238)} = -4.54$ SAY -5				

*Indicates pipe common to both circuits

PRACTICAL HYDRAULICS
FOR THE PUBLIC WORKS ENGINEER

PART TWO

FLOW IN OPEN CHANNELS

As stated before, the Manning formula is commonly used for design of sewers and small channels with uniform flow. This formula is usually written as:

$$V = \frac{1.49}{n} R^{2/3} S^{1/2}$$

in which n is the Manning discharge coefficient, V is the velocity in feet per second, R is the hydraulic radius in feet (area divided by the wetted perimeter), and S is the slope of the hydraulic grade line.

Discharge, Q in cfs, for circular pipes of diameter, D, in inches, flowing full, according to the Manning formula is:

$$Q = \frac{0.00061}{n} D^{8/3} S^{1/2}$$

Figure 15 is a nomograph for the Manning formula. Choice of a suitable Manning coefficient, n, may be made from Table 7. In use of the chart, a straight line is extended through Manning's n and the slope to locate a point on the Turning Line. A second line, drawn through this point, connects discharge, pipe diameter and velocity for the given conditions of flow.

Example Problem:

GIVEN: a 12-inch concrete sewer, flowing just full, laid on a grade of 0.00405 ft. per ft.

FIND: Flow velocity and rate of discharge.

SOLUTION: From Table 7, n = 0.013. From Figure 15, the discharge is 2.27 cfs and the velocity is 2.85 fps.

Partially Filled Sewers

Problems involving sewers flowing only partially full may be solved using a hydraulic-elements graph. For the Manning formula, the ratio of each element of the partially filled section to the corresponding element of the full section is dependent on depth alone. Figure 16 charts these relationships for sewers of circular cross-section. Its use is best explained by the following example.

Example Problem:

GIVEN: A 12-inch sewer, n = 0.013, is laid on a grade of 3.0 feet per 1000 feet.

FIND: Velocity and discharge when the sewer is flowing 0.4 full.

SOLUTION: From Figure 15, Q = 2.0 cfs and V = 2.5 fps. From Figure 16, for d/D = 0.4, q/Q = 0.27 and v/V = 0.71. Therefore, q = 0.27 x 2.0 = 0.54 cfs, and v = 0.71 x 2.5 = 1.78 fps.

Non-Circular Conduits

Figure 15 can also be used for other cross sectional shapes, e.g., rectangular, if the discharge scale, Q, is ignored. If, for example, Q is given, the choice of S and n will locate the transfer point. By pivoting on this point, sets of values of R and V are obtained. By trial and error, a compatible set of values for the given Q and cross section may be found which satisfies the correct depth of flow, d. Since the solution is not unique for a given set of cross section dimensions, these can be adjusted if economy dictates.

Example Problem:

GIVEN: A rectangular, concrete channel to be constructed to a 0.4% slope must discharge 20 cfs.

FIND: Channel dimensions for minimum area.

SOLUTION: On Figure 15, connect the points for S = 0.004 and n = 0.013. Extend this line, locating

Table 7—Values of "n" in Manning Formula

Type of Channel	
Closed Conduits	
Cast Iron	0.013
Concrete	
Straight	0.011
With Bends	0.013
Unfinished	0.014
Clay, Vitrified	0.012
Corrugated Metal	0.024
Brickwork	0.013
Sanitary Sewers, coated with slime	0.013
Open Channels; Lined	
Asphalt	0.013 to 0.016
Brick	0.013 to 0.015
Concrete	
Trowel Finish	0.013
Float Finish	0.015
Unfinished	0.017
Concrete, bottom float finished, with sides of	
Dressed stone	0.017
Random stone	0.020
Cement Rubble masonry	0.025
Dry Rubble or riprap	0.030
Gravel Bottom, sides of	
Random stone	0.023
Riprap	0.033
Excavated or Dredged	
Earth, straight and uniform	0.018 to 0.027
Earth, winding and sluggish	0.025 to 0.040
Channels, not maintained, weeds and brush uncut	0.080 to 0.100
Natural Stream	
Streams	
Clean stream, straight	0.030
Stream with pools, sluggish reaches, heavy underbrush	0.100
Flood Plains	
Pasture, no brush	0.030
With some brush	0.050 to 0.100

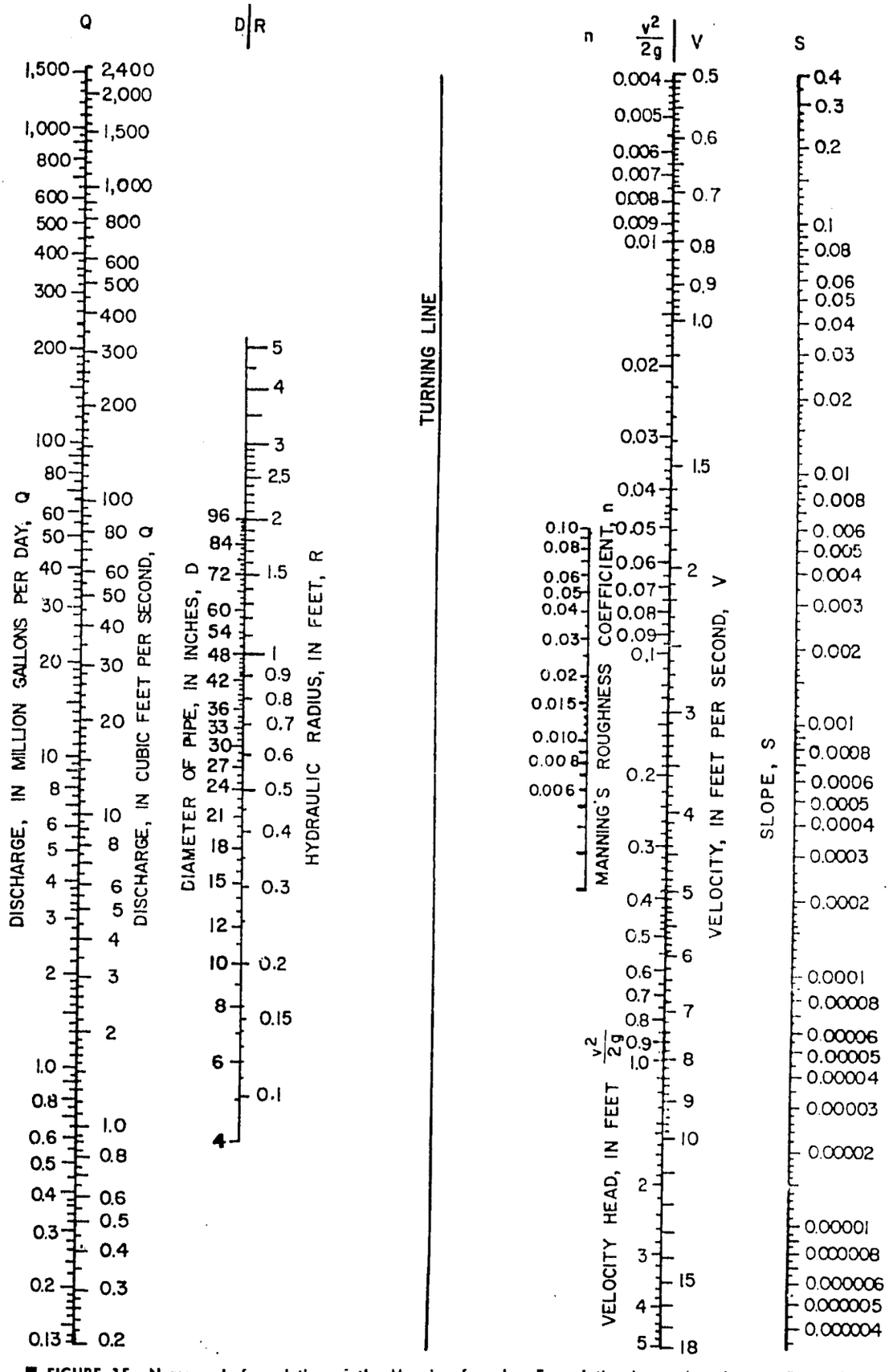

■ **FIGURE 15. Nomograph for solution of the Manning formula. For solution in metric units, see Figure 37.**

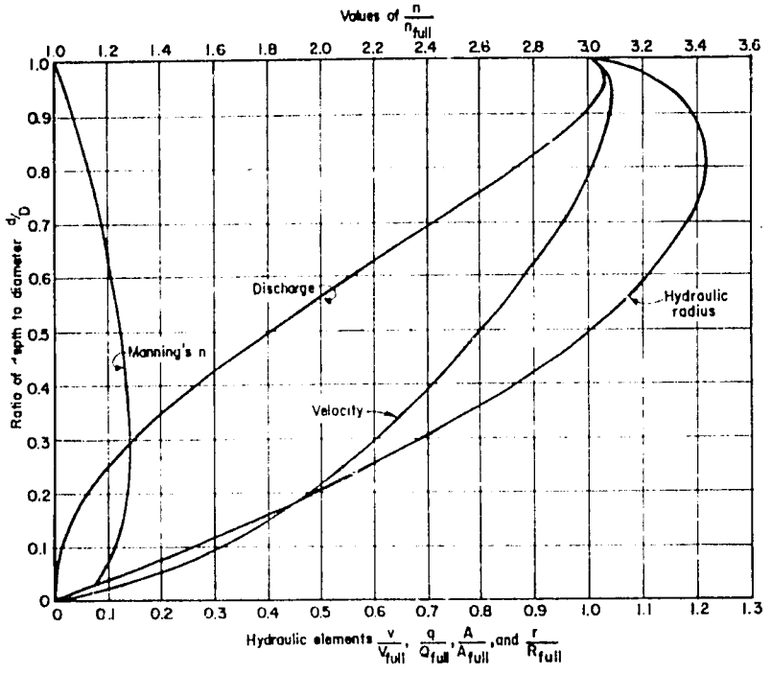

■ **FIGURE 16. Hydraulic elements for circular sewers.**

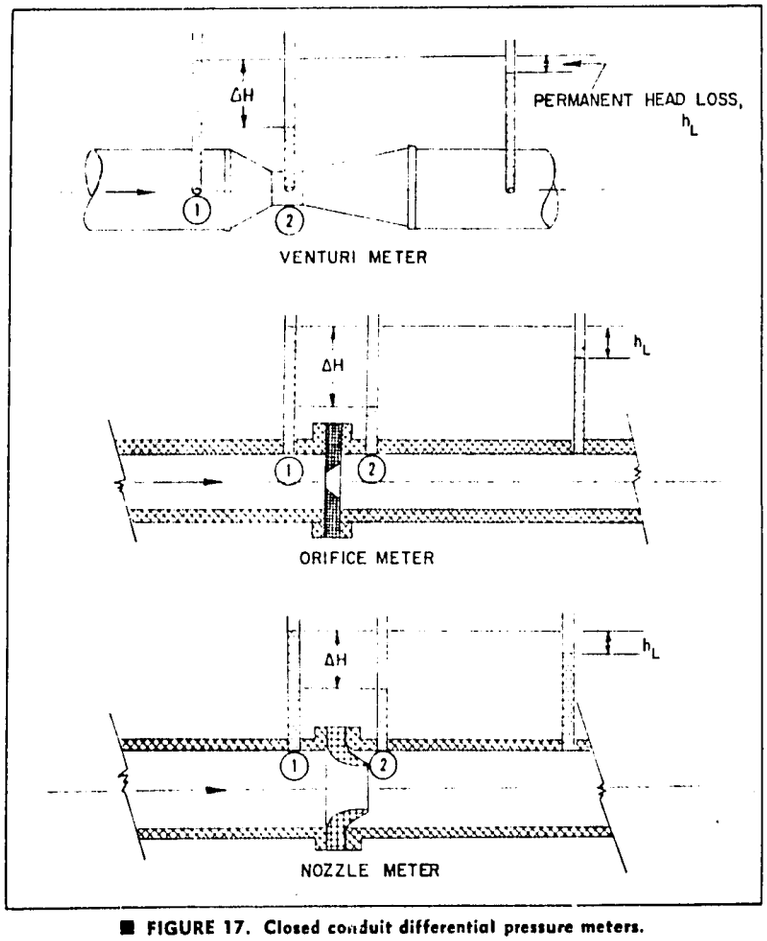

■ **FIGURE 17. Closed conduit differential pressure meters.**

the turning point. By drawing a line through this point, select trial values for R and V. Test each set chosen against discharge, Q = 20 cfs, until satisfactory dimensions are obtained.

A rectangular section is most efficient (i.e., its area is minimum for a given discharge), when its depth, d, is one-half its width, w. Therefore, let d = w/2.

$$R = \frac{wd}{2d + w} = \frac{(w)\ (w/2)}{2(w/2) + w} = \frac{w}{4}$$

$$\text{and } w = 4R,\ A = \frac{w^2}{2}$$

First Trial:

Try R = 0.50 ft. and V = 4.5 fps
Then w = 4(0.50) = 2.0 ft. and

$$A = \frac{(2.0)^2}{2} = 2.0 \text{ ft.}^2$$

$$Q = (2.0)\ (4.5) = 9.0 \text{ cfs}$$
$$< 20 \text{ cfs}$$

Second Trial:

Try R = 0.70 ft and V = 5.8 fps
Then w = 4(0.70) = 2.80 and

$$A = \frac{(2.80)^2}{2} = 3.9 \text{ ft.}^2$$

$$Q = (3.9)\ (5.8) = 22.6 > 20$$

Third Trial:

Try R = 0.67 ft and V = 5.5 fps
Then w = 4(0.67) = 2.68 and

$$A = \frac{(2.68)^2}{2} = 3.6 \text{ ft.}^2$$

$$Q = (3.6)\ (5.5) = 19.6 \text{ cfs}$$
$$\approx 20 \text{ cfs}$$

ANSWER: Width = 2.68 ft = 32 inches; depth = w/2 = 2.68/2 = 1.34 ft = 16 inches; say 32 inches x 16 inches.

Example Problem:

GIVEN: Same channel but a bottom width of 4.00 ft is required.

FIND: Depth, d

SOLUTION: Try R = 0.70 ft and V = 5.8 fps

First Trial:

Try R = 0.70 ft. and V = 5.8 fps

$$\text{Then } A = \frac{Q}{V} = \frac{20 \text{ cfs}}{5.8 \text{ cfs}} = 3.46 \text{ ft.}^2$$

$$d = \frac{A}{w} = \frac{3.46}{4.00} = 0.87 \text{ ft.}$$

$$R = \frac{wd}{2d + w} = \frac{3.46}{2(0.87) + 4}$$
$$= 0.6 \text{ ft.} < 0.7 \text{ ft.}$$

Second Trial:

Try R = 0.65 ft. and V = 5.3 fps

Then $A = \frac{20}{5.3} = 3.78$

and $d = \frac{3.78}{4.00} = 0.94$

$$R = \frac{3.78}{2(0.94) + 4.00}$$

$$= 0.64 \text{ ft.} \approx 0.65 \text{ ft.}$$

ANSWER: Depth = 0.94 ft. = 12 inches; say 48 inches by 12 inches.

Example Problem:

GIVEN: A trapezoidal, concrete channel on a 4.0 ft./1000 ft. grade with a bottom width of 4 ft., a depth of 2 ft., and sidewall slopes of 1:1.

FIND: Discharge, Q.

SOLUTION: On Figure 15, draw a straight line through n = 0.013, S = 0.004, and the turning line.

$$R = \frac{\text{Area}}{\text{wetted perimeter}} = \frac{12.00 \text{ ft.}^2}{6.83 \text{ ft.}}$$

$$= 1.76 \text{ ft.}$$

Draw a straight line through R = 1.76, the turning point previously established, and the velocity line; V = 10.3 fps

ANSWER: $Q = AV = (12)(10.3)$

$$= 124 \text{ cfs}$$

FLOW MEASUREMENT

Closed Conduit Meters

Many closed conduit meters are based on the principle of differential pressure. Application of the energy equation between points 1 and 2 of the meters shown in Figure 17 indicates an increase in velocity head at point 2 which corresponds to a decrease in pressure head. The pressures, measured with manometers, can therefore be related to velocity. Ideally the pressure at point 2 can be expressed as $V = \sqrt{2g \Delta H}$, where ΔH is the difference in pressure head between points 1 and 2. Due to friction, however, this relationship does not hold strictly, and empirical coefficients and/or calibration tests are required to relate the flow to the differential pressure.

The Venturi meter, although relatively expensive, is considered the most accurate closed conduit differential pressure meter and has a low permanent head loss. Another advantage is that it can measure the flow of fluids containing particulate matter, provided the manometer lines are flushed periodically. The cost of Venturi meters can be lowered substantially if plastic inserts are used. There have been many modifications to the Venturi meter using short converging and diverging sections, such as the Dall Tube. The nomograph in Figure 18 may be used to solve for the flow, Q, when the differential head ΔH and throat diameter are known. D_1 is the upstream diameter and D_2, the throat diameter. This nomograph applies for water only (room temperature), and meters for which $D_2/D_1 = 0.5$. It may be used for D_2/D_1 as high as 0.75, but the results will be about 1 per cent high. For high flow rates, the nomograph may be used with no correction factors necessary. For low flow rates (low Reynolds Number), the correction factors shown in Figure 19

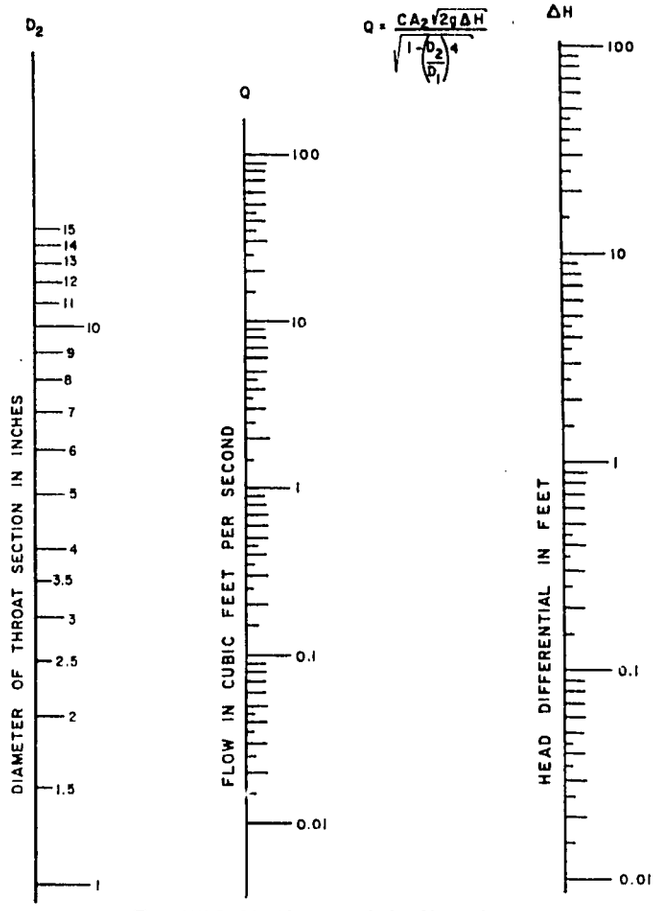

■ FIGURE 18. Nomograph for Venturi meter.

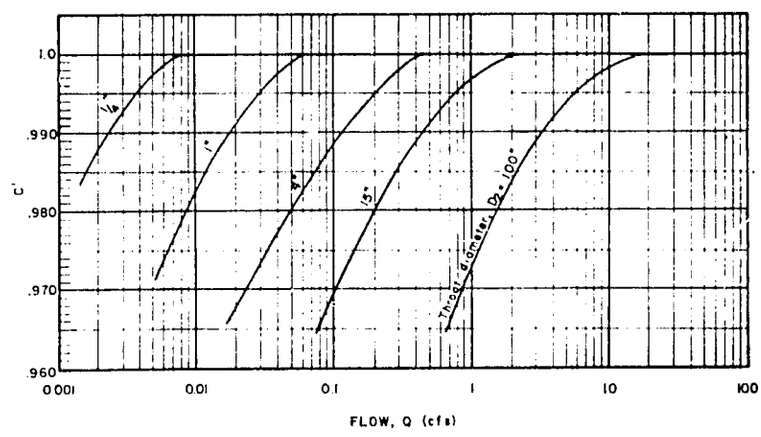

■ FIGURE 19. Corrections for Venturi meter.

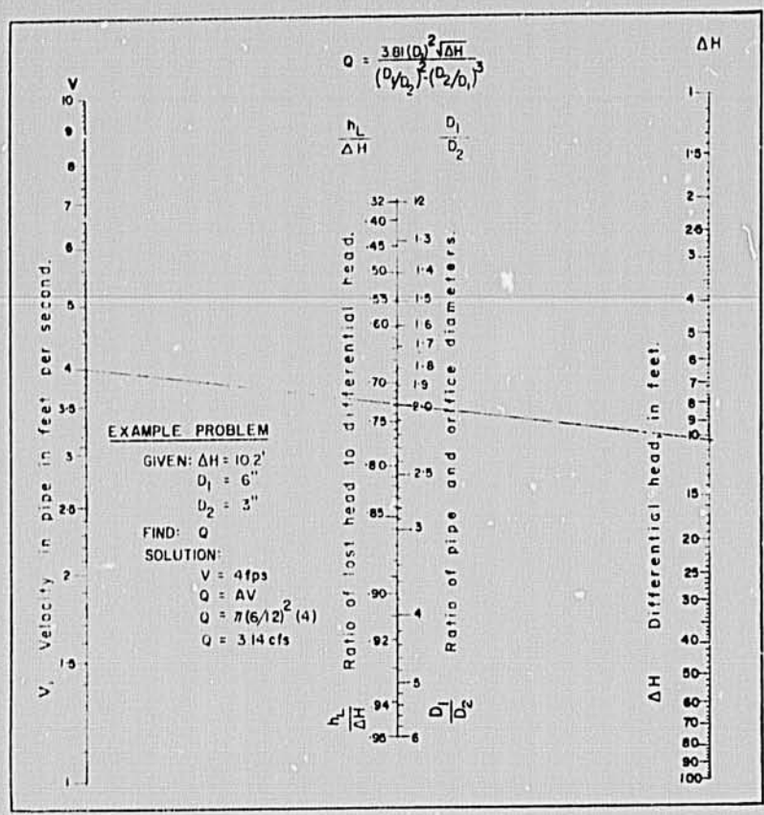

■ **FIGURE 20. Nomograph for orifice meter.**

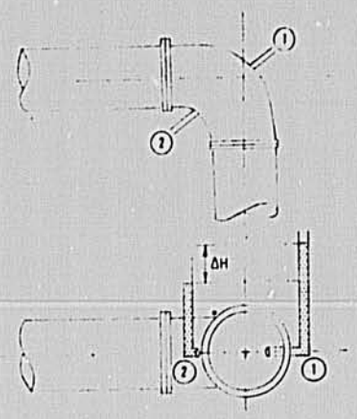

■ **FIGURE 21. Elbow meter.**

must be used. The value of Q from the nomograph must be multiplied by C′ to obtain the final answer:

Example Problem:

GIVEN: Flow through a Venturi with a 1-inch throat. Differential head is 4 feet.

FIND: Flow, Q.

SOLUTION: From Figure 18, Q = 0.087 cfs. Check Figure 19 for possible correction. For Q = 0.087 cfs and D_2 = 1 inch, C′ = 1.0. Therefore, no correction, and answer is Q = 0.087 cfs.

Example Problem:

GIVEN: Same as above, except differential head is 0.1 ft.

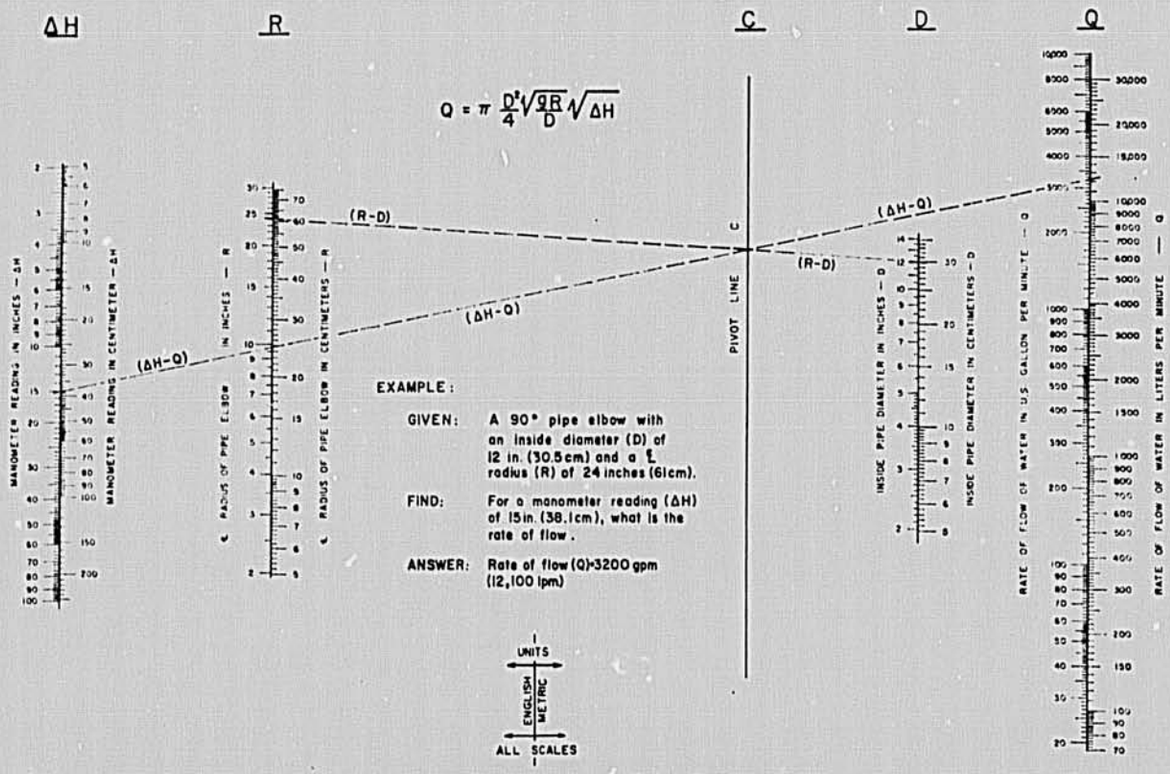

■ **FIGURE 22. Nomograph for elbow meter.**

SOLUTION: From Figure 18, Q = 0.014 cfs. From Figure 19, C′ = 0.987, therefore Q = 0.987 × 0.014 = 0.0138 cfs.

The orifice meter (Figure 17) is the least expensive of the in-line closed conduit meters and creates a substantial head differential. Disadvantages include a relatively large permanent head loss and reduced accuracy for fluids containing particulate matter. The nomograph of Figure 20 can be used to calculate the flow in orifice meters.

The elbow meter is a relatively simple device for measuring flow rates. It consists of a standard pipe elbow, with taps at the inside and outside radius (Figure 21). It is inexpensive but lacks the accuracy of other differential pressure in-line meters. Since standard pipe elbows can be used, it is possible to develop a general equation by which the flow through any elbow may be estimated. The nomograph presented as Figure 22, used for estimating water flow rates, is based on such a relationship.

The curves and nomographs presented here for estimating flows through differential meters may be used if in-place calibrations are not available or possible. Calibration in place is desirable for best accuracy.

The rotameter, or variable-area meter, is a device based on the continuity principle. The flow passes upward through a diverging section in which a float is suspended. The higher the velocity of the water (and hence Q), the higher the float rises in its transparent conical cage. Although these meters are accurate and sensitive, they are relatively expensive.

Commercial water meters are either of the positive displacement type, usually known as nutating disk meters, or vane meters. The nutating disk meters are usually used for low flows and the vanes for higher flows. Combination meters, which use both of these meters in parallel, are used to obtain a wide variation in flows.

Better and more accurate meters are continually being developed. One meter which has found considerable application in the waste treatment field, since particulate matter does not affect its performance, is the magnetic flow meter.

Open Channel Meters

Using the critical flow principle, the velocity of water flowing over a sharp crest and discharging to the atmosphere may be related to the head or depth of water above the weir crest. Many weirs have been developed and calibrated, only a few of which will be discussed here.

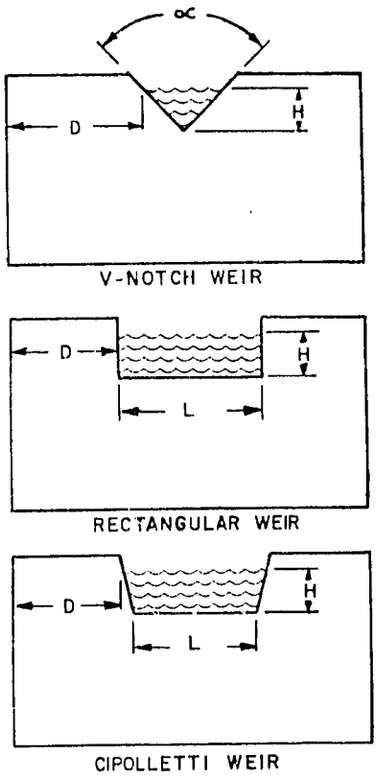

■ FIGURE 23. Types of weirs.

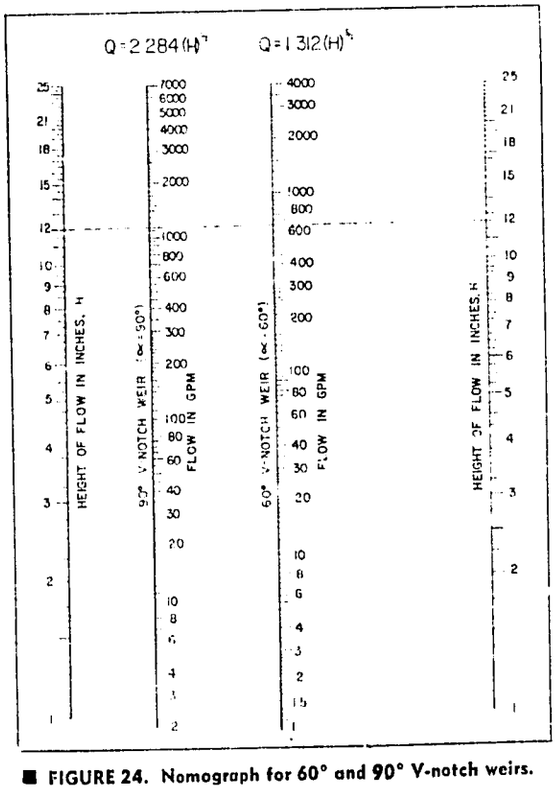

■ FIGURE 24. Nomograph for 60° and 90° V-notch weirs.

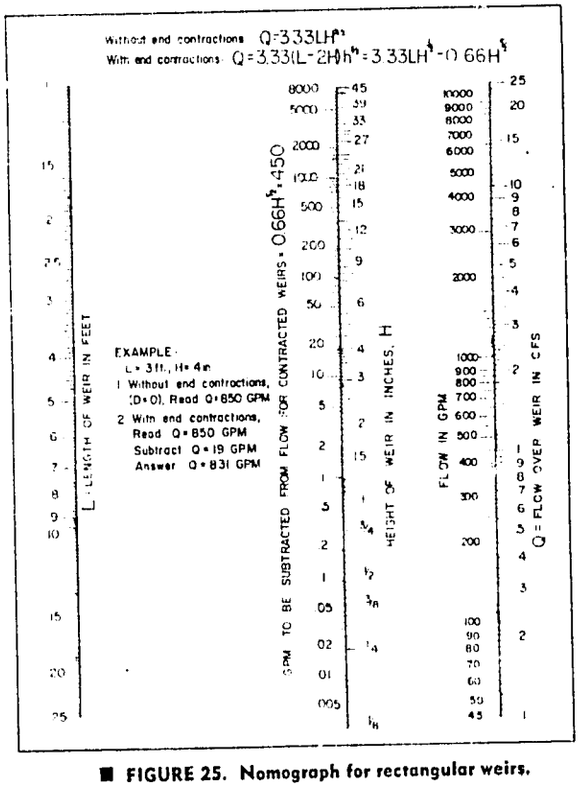

■ FIGURE 25. Nomograph for rectangular weirs.

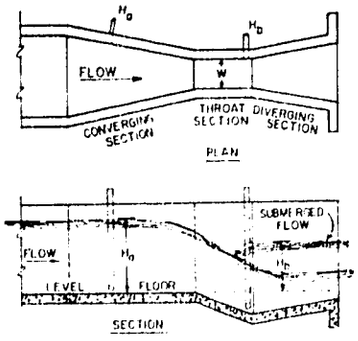

■ **FIGURE 26. The Parshall flume.**

The V-notch weir is possibly the most popular weir used in the water and wastewater industry. It is particularly adapted to situations in which there is a wide variation in flow. A typical weir is shown on Figure 23. The angle of the notch is usually 60° or 90° but almost any angle may be used. Nomographs, as in Figure 24, may be used for estimating the flow over 60° and 90° V-notch weirs.

The rectangular weir, shown on Figure 23, is particularly adapted to relatively stable flows, and it obviously has greater discharge per unit width of channel than does the V-notch weir. Flows over rectangular weirs may be estimated using the nomograph shown as Figure 25. The Cipolletti weir has also found some application, mostly in irrigation work. A disadvantage of all weirs is the relatively large loss of head. Likewise, for water containing particulate matter, the weir calibration may be changed due to the buildup of solids on the upstream side. Their great advantage is their simplicity and ease of construction.

The Parshall flume, although more expensive than weirs, has found considerable use in water and waste treatment plants and in irrigation schemes due to its low permanent loss of head and self-cleaning capacity. A typical flume, shown on Figure 26, consists of a rapidly converging and dropping section, in which a critical flow situation is developed. If the flow through a Parshall flume is free (i.e. no hydraulic jump is formed), the flow may be estimated by measuring the upstream water level. The nomograph shown as Figure 27 may be used for such calculations. For higher flows, a hydraulic jump is formed at the downstream end of the flume, and the higher the flow the further upstream will the jump move until it completely submerges the throat. The percent of submergence is defined as H_b/H_a. If the throat section is submerged, the flow is obviously not critical, and the calibrations and nomograph may no longer be used without appropriate corrections. The corrections for submergence are shown as Figure 28. The submergence is calculated, and the value of Q/Q_o read for the proper throat width. The flow through the flume is then calculated by multiplying the flow obtained from the nomograph by Q/Q_o.

Instrumentation

The meters thus far discussed may be classified as primary devices, in that the flow of water is related directly to some other measurement, such as head differential. It is necessary to convert this to a readable signal. For differential meters such as the closed conduit meters, the head differential may be read by manometers, as previously discussed. The water depth for the open channel meters may be determined by using hook gages. Both of these methods, however, are not adaptable to recording or transmitting the signal, and therefore these are known as indicators. It is possible by various means such as diaphragm or mercury well manometers to transmit the signal to recorders or totalizers.

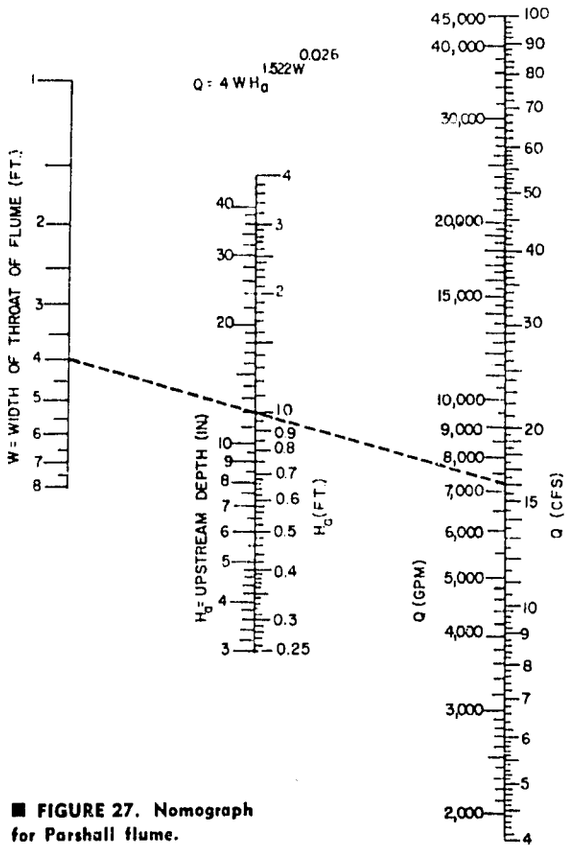

■ **FIGURE 27. Nomograph for Parshall flume.**

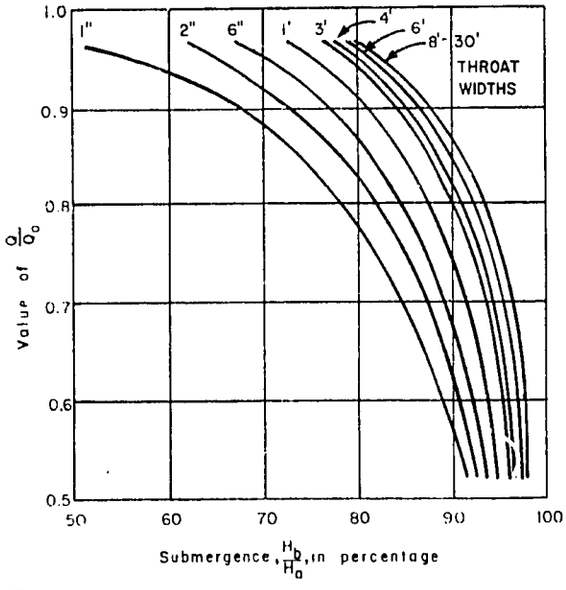

■ **FIGURE 28. Corrections for Parshall flume submergence.**

PRACTICAL HYDRAULICS
FOR THE PUBLIC WORKS ENGINEER

PART THREE

PUMPS

Pumps are mechanical devices for converting other forms of energy to hydraulic energy. When interposed in a pipe, they add energy to the liquid passing through the pipes. Nearly always, it is pressure energy. Pumps, like motor vehicles, are not individually designed for public works projects, except for very large or unusual installations. Rather, they are selected from pre-designed and manufactured units readily available for a wide range of applications.

Economical selection requires that attention be given to: 1) The normal pumping rate, and also the minimum and maximum rate that the pump will ever be called on to deliver; 2) the total head capacity to meet flow requirements; 3) suction head (or lift); 4) pump characteristics, including speed, number, power source, and spatial, environmental and other special requirements; and 5) the nature of the liquid to be pumped.

There are many types of pumps, but the two most often encountered in public works are *roto-dynamic* and *displacement* pumps. Roto-dynamic pumps impart energy to liquids with a rotating element, or *impeller*, shaped to force water outward at right angles to its axis *(radial flow)*, to give the liquid an axial as well as a radial velocity *(mixed flow)*; or to force the liquid in the axial direction alone *(axial flow)*. Radial flow and mixed flow machines are commonly referred to as *centrifugal pumps* and axial flow machines are called *propeller pumps*. Displacement pumps include the *reciprocating* type, in which a piston draws water into a cylinder on one stroke and forces it out on the next, and the *rotary* type, in which two cams or gears mesh together and rotate in opposite directions to force water continuously past them. In addition there are *jet pumps (ejectors), air-lift pumps, hydraulic rams, diaphragm pumps*, and others which may be useful under special circumstances.

About 60 percent of all pumps in use are of centrifugal design and the majority of these are in a head and capacity range that can be met by standardized pumps. Centrifugal pumps have been built in sizes ranging from a few gpm to the mammoth 144-in. pumps at Grand Coulee which handle 1,350 cfs (605,000 gpm) against 310 feet total head and are driven by 65,000-hp motors. The remaining comments on pumps are directed primarily to centrifugal and propeller pumps although certain comments are of course more broadly applicable.

Head Terms

The *static suction head* (Figure 29) on a pump is the vertical distance, i. e., elevation difference, from

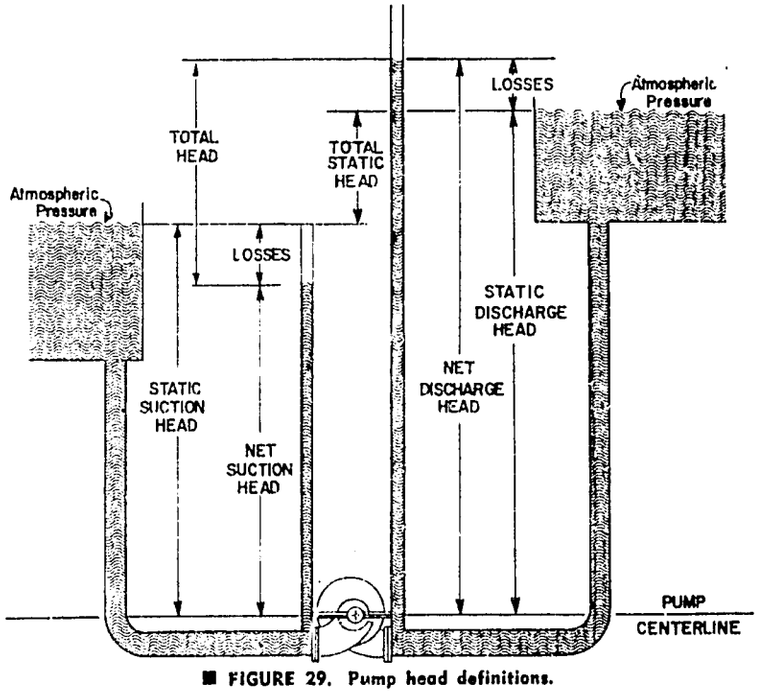

■ FIGURE 29. Pump head definitions.

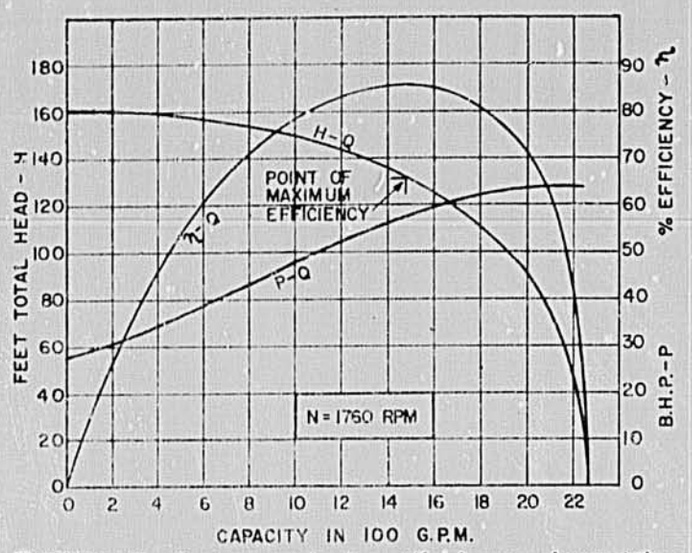

■ **FIGURE 30. Specimen graph of centrifugal pump characteristics.**

a free liquid surface* on the intake to the pump centerline. This static head may be positive or negative (the latter sometimes called *suction lift*). The *net suction head* h_s is the static suction head minus friction head losses, including entrance loss, for the capacity under consideration. The *static discharge head* is the vertical distance from the pump centerline to the free surface *(or discharge)** on the discharge line. Similarly, the *net discharge head* h_d is the static discharge head plus the friction head losses. The *total head* H is the difference between the net discharge and suction heads, or,

$$H = h_d - h_s$$

In pumping liquids, the pressure at any point in the suction line should not be reduced to the vapor pressure of the liquid, if air binding, loss of prime and cavitation are to be avoided. The available energy that can be utilized to move liquid through the suction line to the impeller is thus the net suction head h_s, plus any pressure (a vacuum being a negative pressure) existing in the suction supply line, and less the vapor pressure P_{vp} of the liquid at the pumping temperature. This energy or head is known as the *net positive suction head* and is generally indicated by its initials, NPSH.

Two types of NPSH are important in pump selection, the *required NPSH* and the *available NPSH*. The former is a characteristic of the pump, varies with the operating condition, and is defined as the energy needed to fill a pump on the suction side and overcome losses in the system, i.e., the minimum required margin between suction head and vapor pressure at a given capacity. Many factors, such as eye diameter, shape and number of impeller vanes, shape of suction passages, and many more, determine required NPSH.

The available NPSH is characteristic of the system and is the energy available in the liquid at the suction side, i. e., the difference between the existing absolute suction head and the vapor pressure at prevailing temperature. The available NPSH must always exceed the required NPSH if cavitation is to be avoided and flow unimpaired. The required NPSH can be obtained for any pump from the manufacturer. The available NPSH, however, must be calculated for each system.

The available NPSH is the algebraic sum of the potential pressure and velocity heads. Since vaporization of the fluid is to be avoided, vapor pressure of the fluid at the specific operating temperature must be subtracted from the pressure term. Because the total energy of a system is constant, the available NPSH may be determined at some point distant from the pump. If a point on the intake reservoir surface is selected, the velocity is negligible and the available NPSH in feet of water is:

$$NPSH_{av} = S - h_L + \frac{P_{at} - P_{vp}}{w}$$

For pressure in psi for water, the equation is:

$$NPSH_{av} = S - h_L + 2.31\ (P_{at} - P_{vp})$$

Where

- S = static suction head in feet of water
- P_{at} = pressure head (approximately 14.7 psi if open container under atmospheric pressure),
- P_{vp} = vapor pressure of liquid (0.256 psia for water at 60°F.)
- h_L = friction head loss in suction system in feet of water. Note that $S - h_L = h_s$ (net suction head) by definition.

For a system where a gage reading is available at the suction side of the pump, the available NPSH can be calculated as:

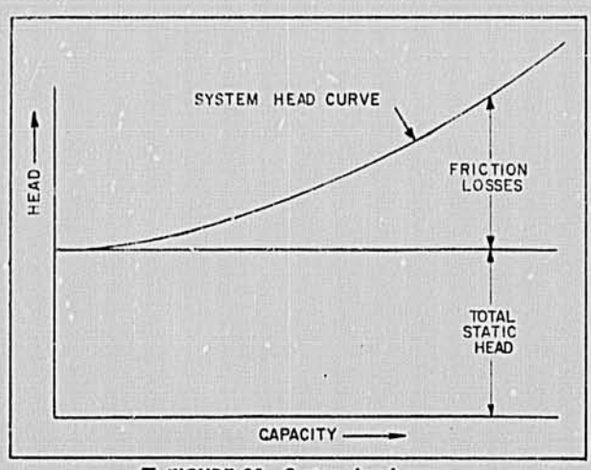

■ **FIGURE 31. System head curve.**

* If no free surface exists, the gage pressure at the pump flange (suction or discharge) for zero discharge, corrected to centerline pump elevation, should be used in lieu of the static head (suction and/or discharge as appropriate).

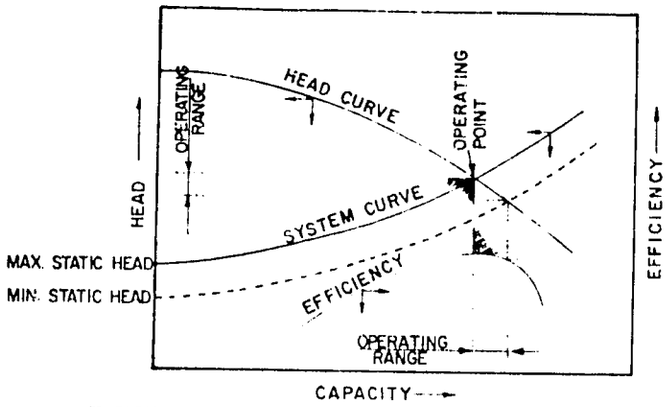

■ **FIGURE 32. Determination of pump operating point.**

$$NPSH_a = 2.31\ (P_{gage} + P_{at} - P_{vp}) + V^2/2g + Y$$

Where

P_{gage} gage reading in psi

V velocity in suction line, fps

Y difference in elevation between pump centerline and gage.

Example Problem:

GIVEN: A given discharge by the system show in Figure 29; friction losses = 12 ft, vapor pressure = 0.256 psia, and the vertical distance from pump centerline to intake reservoir surface is 20 feet.

FIND: Available NPSH

SOLUTION:

$$NPSH_a = 20 - 12 + 2.31(14.7 - 0.256) = 41.4 \text{ ft.}$$

Example Problem:

GIVEN: A gage is placed at the suction side of the pump, at 1 foot above the pump centerline, and the gage reading is P_{gage} = 2.4 psi. The velocity in the pipe is 10 fps.

FIND: Available NPSH

SOLUTION:

$$NPSH_a = 2.31\ (2.4 + 14.7 - 0.256) + 10^2/64.4 + 1 = 41.5 \text{ ft.}$$

Power Requirements

The useful work done by a pump is the product of the weight of liquid pumped multiplied by the head developed by the pump. The power or work per unit time required is the *hydraulic horsepower,* commonly known as *water* horsepower *(WHP).* By definition:

$$WHP \propto QHw$$

Where Q is pump discharge, H is total head, and w is specific weight. For water at 68 F., Q in gallons per minute (gpm), and H in feet:

$$WHP = \frac{QH}{3960}$$

The total power required to drive a pump is the *brake horsepower (BHP).* The ratio of the water horsepower to the brake horsepower is the pump efficiency, η:

$$\eta = \text{percent efficiency} = \frac{WHP}{BHP} \times 100$$

Therefore:

$$BHP = \frac{100\ QH}{3960\ \eta}$$

for water at 68°F. BHP for other water temperature and other liquids can be determined by correcting for the change in specific weight. For natural waters, correction of specific weight for temperature is usually negligible. Meticulous accuracy for the usual installation is unwarranted as pump motor sizes are rounded off to the next higher standard size.

Pump Characteristic Curves

For a given pump, the total head developed, the power required to drive it, and the resulting efficiency vary with discharge. These interrelations of head, power, efficiency and capacity are commonly known as the *characteristics of the pump.* They are best shown graphically, as *pump characteristic curves.* The usual practice is to plot head, power, and efficiency against capacity at constant impeller speed as shown in Figure 30.

The curve *H-Q,* showing the relation between capacity and total head is called the *head-capacity curve;* and pumps are often classified on the basis of the shape of their head-capacity curves.

The curve η-Q shows the relation between efficiency and capacity and is called simply the *efficiency curve.* The efficiency curve usually exhibits a maximum or peak efficiency.

The curve P-Q showing the relation between power input and pump capacity is generally termed the *power curve.*

System Head Curves

The head loss in a pumping system increases of course with increasing flow through the system. This can be shown graphically as a *system head curve.* Figure 31 is an example. The system head loss for any flow rate is the sum of friction head loss at that rate plus the total static head in the system.

The total static head is the difference in elevation between the discharge liquid level and the suction liquid level. (See Figure 29). Inasmuch as the static head is present, whether the pump is operating or not, it is plotted as the lower portion of the system head curve.

Friction losses, including minor losses, are determined as outlined in Part I of this series. The system piping and fittings may be converted to one equivalent pipe and head losses for several flow rates determined readily from the Hazen-Williams nomograph (Part I, Figure 11). Alternatively the head loss through all pipe and fittings may be computed for a single flow rate and losses for other flow rates determined from the relationship:

$$\frac{Q_1}{Q_2} = \left(\frac{H_1}{H_2}\right)^{0.54}$$

Total head for zero discharge will be equal to the total static head. This point plus several computed points will suffice to plot the curve. Quite commonly, the static head in a system will vary as tanks and reservoirs are filled and lowered. In such cases, system curves may readily be constructed for minimum and maximum heads, thereby, as will be seen shortly, enabling prediction of system pumping capacity for the entire range of possible static head conditions. (Shown on Figure 32).

By separation of static and friction head in preparing the system head curve, the reasonableness of friction losses can be checked. If piping to be used is too small, then the pump and motor capital and operating costs due to the higher head capacity required will be excessive. As a

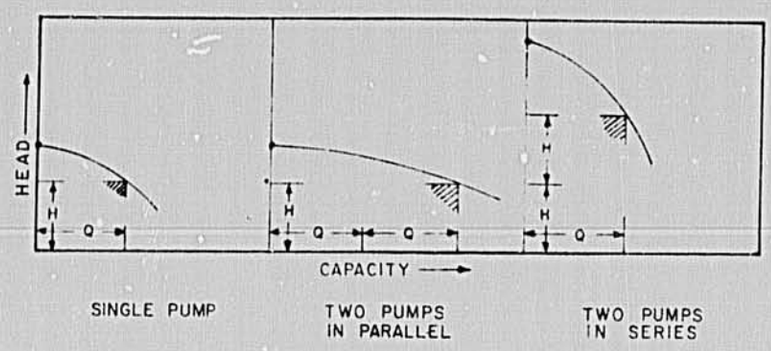

■ **FIGURE 33. Change in head-capacity curve for pumps operating in parallel and in series.**

rule of thumb, the friction losses should not be more than 10 to 20 percent of the static head for comparatively short pipe lines. For elaborate and costly installations, an economic analysis of the tradeoff between pumping and piping costs may be justified.

Operating Head and Discharge

The usual design condition is that a system will be given and the proper pump must be selected. If on the system head curve (such as Figure 31), a pump head capacity curve (such as in Figure 30) is superimposed, then their intersection will locate the *operating point*. Figure 32 is an example. The operating point is the discharge and head at which the given system and given pump will operate. This also locates the efficiency of operation and the power requirements. A pump should be selected that has an operating point at or near its peak efficiency. Many other factors, some previously outlined, must also be considered in selecting from the multitude of options available, but meeting the system discharge requirement (for a given system, satisfying discharge automatically meets the head requirement) at reasonable efficiency is paramount.

The pumping head developed is doubled if two identical pumps are placed in series. Conversely, two pumps in parallel will double the pumping capacity. (Figure 33). This does not mean, however, that the head or capacity of a *system* is doubled. Superimposing a system curve on the head-capacity curves for two pumps in parallel, it is clear (from Figure 34) that the added capacity results in a greater friction head loss, the relationship being:

$$h_l \propto Q^2$$

and that the system capacity with two pumps in parallel is not double its capacity with one pump. Similarly pumping in series will double neither head nor discharge.

Centrifugal Pump Relations

The *specific speed* (N_s) of a pump is defined as the speed in revolutions per minute (rpm) at which a theoretical and geometrically similar pump would run if proportioned to deliver 1 gpm against 1 foot total head with its best efficiency. It is therefore an index of pump type and for homologous (having the same angles and proportions) designs, the performance of any impeller of the series can be predicted from the knowledge of the performance of any other impeller of the series. Because the physical characteristics and the general outline of impeller profiles are intimately related to their respective type specific speeds, the value of the latter will immediately describe the approximate impeller shape in question. For radial flow impellers, the range of specific speed is 500 to 3,500; for mixed flow, 3,500 to 7,500; and for axial flow, 7,500 to 12,500.

Specific speed may be calculated as:

$$N_s = \frac{N\sqrt{Q}}{H^{3/4}}$$

Where:

N_s = specific speed in rpm
N = rotative speed in rpm
Q = flow in gpm at speed N and head H (single suction; for double suction, Q should be taken as one-half total flow)
H = total head per stage in feet

For a given total head and suction head (lift) condition, experience indicates that the specific speed of a pump should be below a certain value for successful operation. The Hydraulic Institute has issued "Specific Speed Limit Charts." Their chart for single stage centrifugal

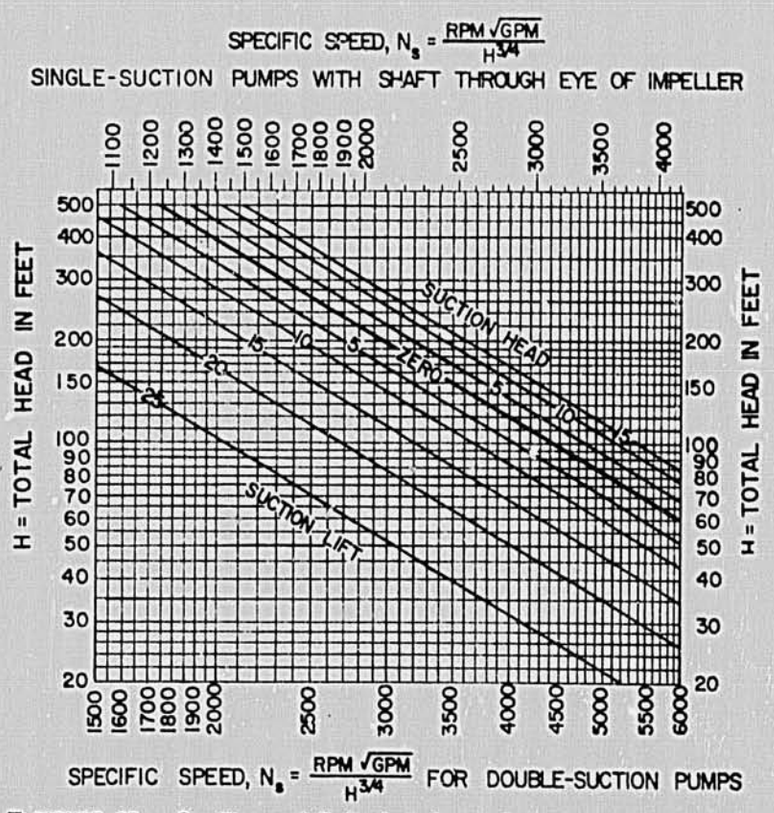

■ **FIGURE 35. Specific speed limit chart for single stage centrifugal pumps.**

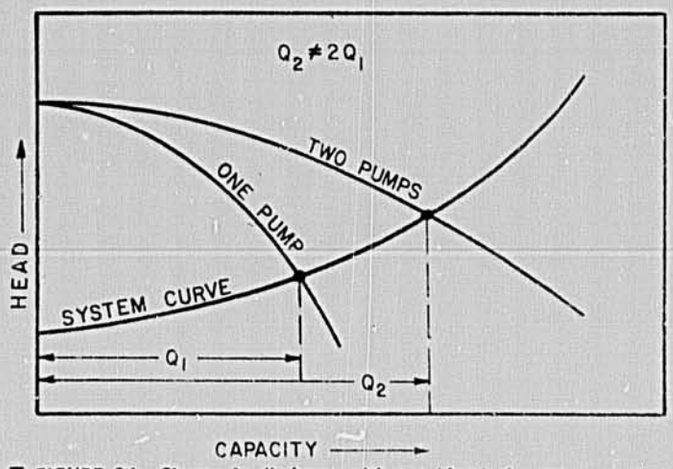

■ **FIGURE 34. Change in discharge with two identical pumps operating in parallel.**

pumps is reproduced as Figure 35. The Hydraulic Institute charts indicate only the empirical maximum rotative speed that assures proper operation. The maximum specific speed indicated by the chart *does not* necessarily correspond to the point of maximum operating efficiency. Pumps, as indicated previously, are normally chosen so that the operating point (s) will be at or near maximum efficiency.

For a given head and capacity it is desirable to use as large a specific speed as possible since this results in a smaller-diameter impeller and hence a smaller and cheaper pump. In general the efficiency will also be higher.

Acknowledgment

The authors wish to acknowledge the assistance and cooperation of the Community Water Supply Branch, Office of the War on Hunger, U. S. Agency for International Development who made available many of the figures used in this series.

Computational Aids

Engineers regularly engaged in hydraulic calculations may find computational aids, similar to those presented herein, of value. Accordingly, listed below are some references with extensive and useful tables, charts, and graphs, of hydraulic functions, dimensions, constants, and properties.

1. *Water Measurement Manual*, Bureau of Reclamation, Denver, Colo. 80225 ($2.50*).
2. *Hydraulics and Useful Information*, Chicago Pump, 622 Diversey Parkway, Chicago, Ill. 60614. (Free on Request).
3. Pipe Network Calculator Kit, Cast Iron Pipe Research Association, 3440 Prudential Plaza, Chicago, Ill. 60601. (Free on Request).
4. *Cameron Hydraulic Data*, Ingersoll-Rand Company (Published by Compressed Air Magazine Co., Phillipsburg, N. J., $3.00*).
5. *Hydraulic Tables*, Williams and Hazen, Wiley, New York. ($4.50*).
6. *"Design Charts for Open-Channel Flow,"* Bureau of Public Roads, Washington, D. C. (U.S. Government Printing Office, $0.70*).
7. *Handbook of Hydraulics*, King, H. W. and Brater, E. F., McGraw-Hill, New York ($15.00*).
8. *Hydraulic Tables*, U. S. Army Corps of Engineers, Washington, D. C. (U. S. Government Printing Office, $0.70*).

* Prices subject to change.

ADDITIONAL PROBLEMS

1. Referring to Figure 4, the difference in height of the manometer fluid, mercury, is 32.7 inches; height X is 47.5 inches; height Z is 12.5 inches. Find pressure in the pipe. Specific gravity of mercury is 13.6.

2. Given a new cast iron pipe 16 inches in diameter and 2,000 feet long. Using the Moody diagram, determine whether this pipe will carry 1450 gallons per minute with a head loss not exceeding 2.5 feet. Water temperature is 60°F.

3. A 24-inch pipe with centrifugally spun concrete lining carries a flow of 10 mgd. Find (a) head loss, (b) velocity.

4. A 6-inch main is carrying a flow of 1.0 cfs. What head loss is produced by two regular flanged 45° elbows and a gate valve one-half closed?

5. Three pipes, each 1500 feet long, are arranged in parallel. Two are 6-inch diameter; the other is 10-inch. All three have a Hazen-Williams "C" value of 100. Find diameter of the equivalent pipe.

6. a vitrified clay pipe sewer is to discharge 4 cfs when laid on a grade of 0.0016 and flowing half full. What is required diameter?

7. An 18-inch sewer, n=0.013, is 1500 feet long and laid on a uniform grade. Difference in elevation of the two ends is 4.8 feet. Find velocity and discharge when sewer is flowing 0.6 full.

8. A 48-inch circular sewer is required to discharge 100 cfs when full. What is the required grade, according to the Manning formula, if n=0.015?

9. A rectangular open channel, flowing with a depth equal to one-half the width, discharges 4 cfs. What will the discharge be if the depth of flow is doubled? n=0.015.

10. If a flume is concrete, float finished, with a width of 2 feet and side wall depth of 4 feet, what is the minimum slope permitted to avoid overflowing at a discharge of 10 cfs?

11. What should be the maximum weir height for measuring a flow of 1000 gpm with (a) 60° V-notch weir; (b) 90° V-notch weir; (c) rectangular weir without end contractions and a length of 3 feet?

12. A Parshall flume with a throat width of 3.0 feet has a throat submergence, or H_b, of 18 inches with an upstream depth of 20 inches. What is the flow in cfs?

13. A pump delivers 900 gpm against a total head of 145 feet. (a) Assuming a pump efficiency of 90 percent, what is the brake horsepower? (b) At a nominal rotative speed of 1760 rpm, what is the specific speed for a single suction, single-stage pump?

14. Given, two identical pumps with characteristics shown in Figure 30. Find discharge for a head of 100 feet if (a) both pumps are operated in series; (b) both pumps are operated in parallel.

Answers: 1) 16.5 psi; 2) yes, h_f = 2.41'; 3) 3.0'/1000', 5.0 fps; 4) 2.44'; 5) 11.9"; 6) 22.4", use 24"; 7) 2.85 fps, 3.19 cfs; 8) 0.0065; 9) 9.68 cfs; 10) 0.000213; 11) 14.1", 11.4", 4.5"; 12) 21.2 cfs; 13) 36.6 hp, 1260; 14) 2200 gpm, 3800 gpm.

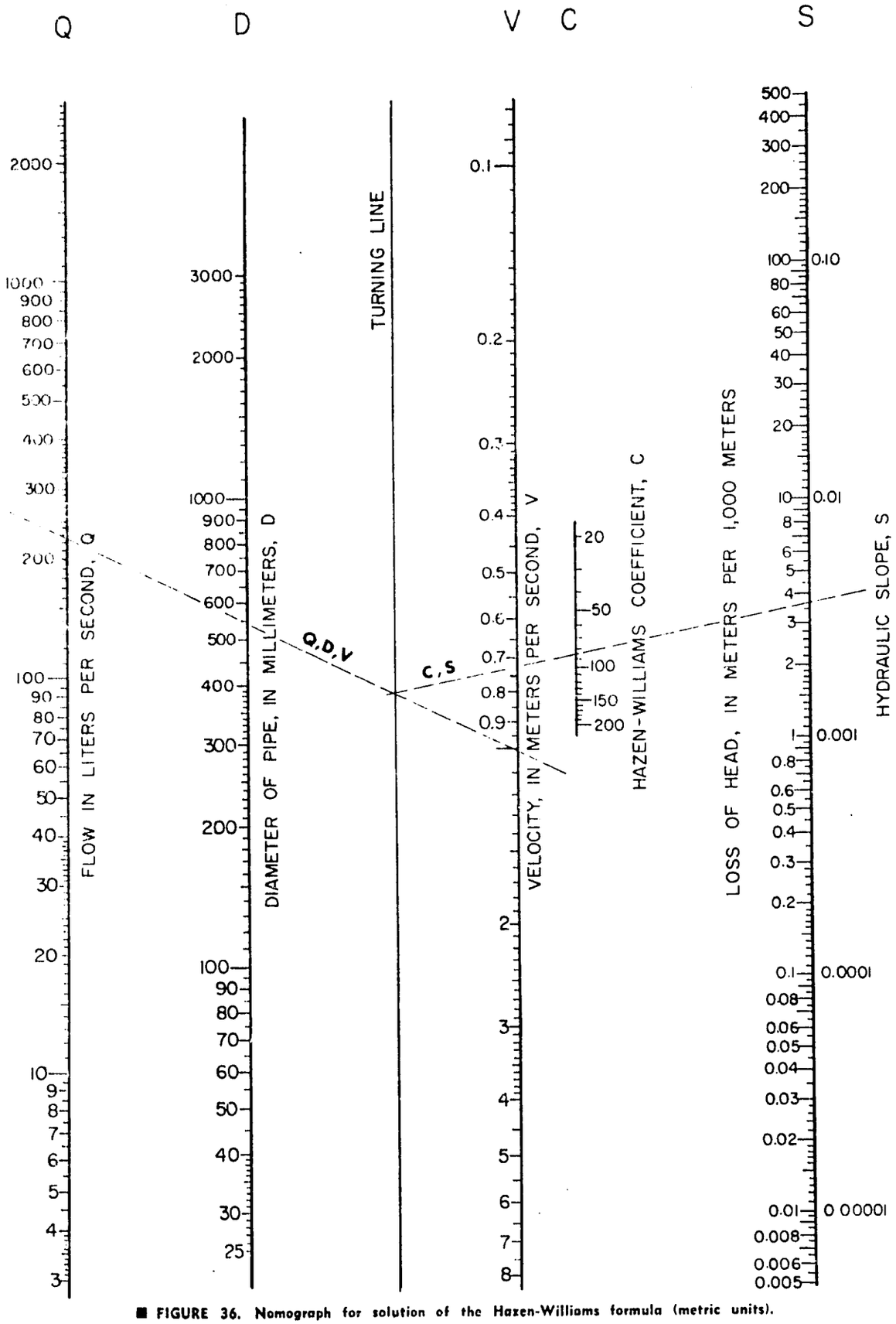

■ FIGURE 36. Nomograph for solution of the Hazen-Williams formula (metric units).

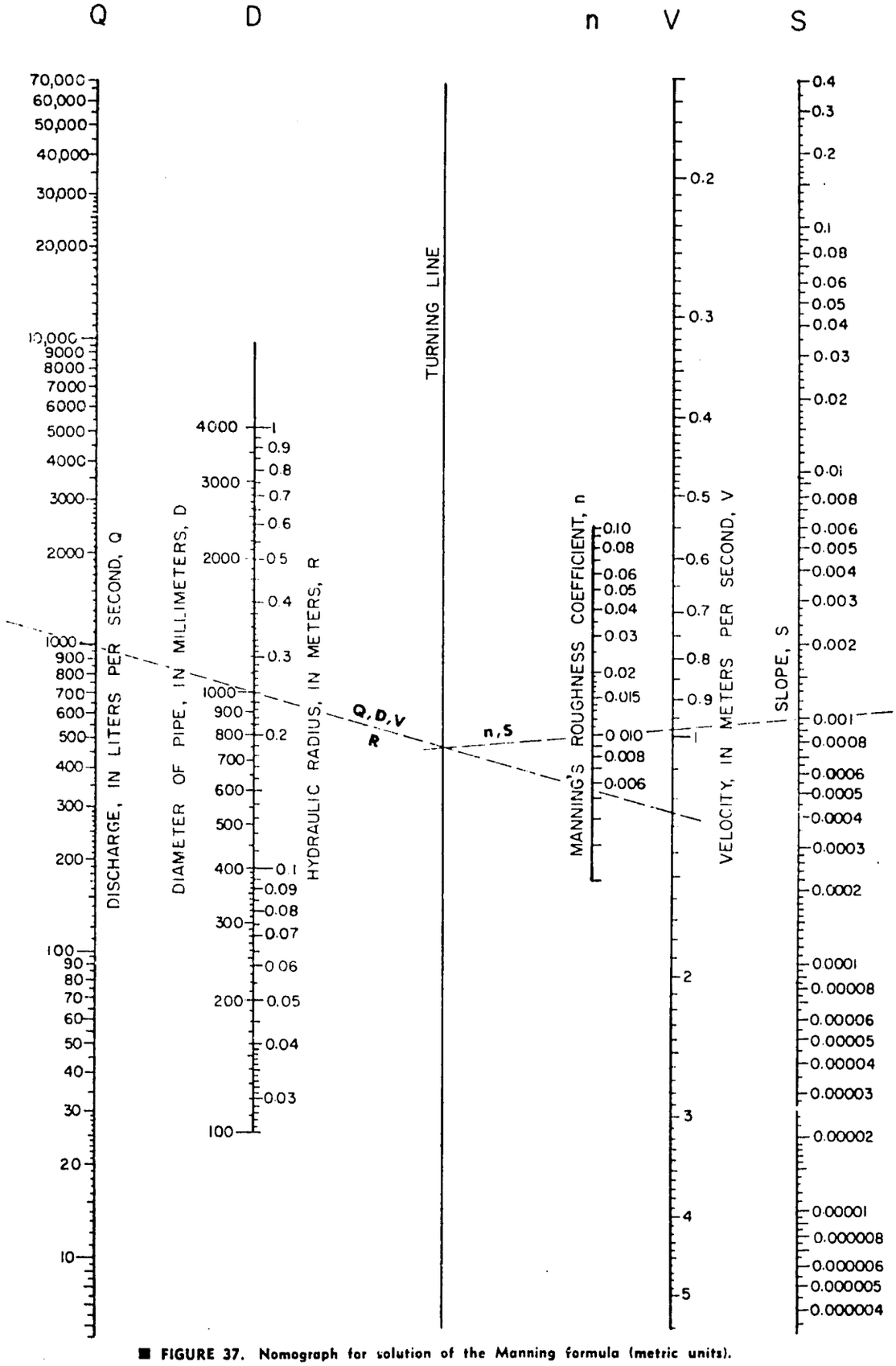

■ **FIGURE 37. Nomograph for solution of the Manning formula (metric units).**

International Conference on WATER for PEACE

May 23-31, 1967 Washington, D.C.

Topic - - of the Agenda
Author's Name: Daniel A. Okun
Co-Author's Name: Frederick E. McJunkin

Original Language: English
Author's Country: United States of America
Author's Affiliation: Head, Department of Environmental Sciences and Engineering and Director, International Program in Sanitary Engineering Design, University of North Carolina

PLANNING AND DEVELOPING WATER SUPPLY PROGRAMS IN DEVELOPING COUNTRIES

Introduction

The relationship between man and water is long, intimate, even mystical. Romantic evolutionists explain the mystique between man and water as his heritage from a time before he was even man, perhaps a single-celled creature born in the sea. Or in the words of the lyric poet, Walt Whitman, "Out of the cradle endlessly rocking." Langdon Smith put it more humorously, "When you were a tadpole and I was a fish in Paleozoic time." Since the coming of man upon the planet, drinking water has been indispensable. The earliest people lived beside readily available water which had not yet become fouled by man's indiscretions, and the great civilizations of history developed alongside the rivers and lakes. However, with increasing growth and dispersion of population, people found themselves far removed from drinking water sources adequate for all seasons or were forced to use water which had become dangerously contaminated. The widespread inadequacy of drinking water supplies is responsible for perhaps 500,000,000 cases of debilitating illness per year, perhaps 5 million infant deaths each year (1). For ages it has been traditional for women to carry water for family use, a duty which takes much of their time and involves many miles of weary walking. It is ironic that a necessity of life obtained with such effort and devotion may carry the germs to destroy the objects of that devotion.

Everywhere the picture is not the same. In the United States as in other highly industrialized countries of the world, although constant vigilance is required to assure continuous safety, and momentary local shortages may arise, the provision of community water supply has been so successful as to have it taken for granted. Wherever the delegates to this conference travel in the United States, they will have full confidence in the water available in their hotels. In England as in the Netherlands, more than 97 per cent of all the people, including those in rural areas, are served by piped water from public supplies. Many lessons can be learned from the experiences leading to this high level of accomplishment (2), but it is fallacious to believe that the available technology needs only to be exported to the developing nations to solve their problem. It is also fallacious to believe that engineering efficiency goes hand in hand with sophisticated mechanization and instrumentation.

Economic, labor, and resource conditions in developing countries are generally so different from those in industrialized countries that the technical solutions may not be the same. Conditions characteristic of many of the developing countries include: limited financial resources, particularly foreign currency; limited manufacturing capacity; limited skilled labor but ample unskilled labor; scarce engineering manpower resources for conceiving, planning, constructing and operating works; and a concurrent need for many other facilities such as schools, roads, hospitals, houses, etc. These factors must be considered in establishing the nature of the water supply needs in developing countries and how these needs can be most expeditiously and economically met.

In addition to these influences, there is the more important consideration of the people to be served. Less than 10% of the population in developing countries are supplied with piped water in their homes, and this very commonly on the basis of an intermittent service lasting only a few hours each day and with inadequate supervision of quality (3). It is questionable if new construction is keeping pace with population growth - much less reducing accumulated backlogs. Under these conditions, Dr. H. G. Baity, formerly Director of the Division of Environmental

---

This paper was presented orally at the International Conference on Water for Peace and will appear in the Conference Proceedings. Reproduced here by permission.

health of the World Health Organization (and Professor Emeritus at the authors' University), has so aptly stated [4]: ". . . it becomes logical to give (some) water to as many of the people as possible rather than to give a perfect supply to a few." In a highly developed country, a sanitary engineer can cloak himself in the respectably conservative (and safe) mantle of "standard practice" and be a useful servant of society. If one accepts Dr. Baity's argument, the same engineer, applying the same "standard practice" within developing countries, would be a wastrel where needs are so great that any waste is inequitable - perhaps even immoral.

Let it be understood that in no way are we suggesting that crude engineering or crude solutions are good enough in developing countries. But we are suggesting that the proper measure of good engineering is how well, both functionally and economically, it serves the needs of the populace and not how elaborate it may be. Results are the proper criteria for judging success, and no particular technology, regardless of its sophistication, has superior virtue in and of itself. The result sought is an adequate amount of safe water for people - the more people, the better result.

The designer and developer of community water supplies in developing countries even more than his counterpart in developed countries, must be inquisitive of the basic reasons behind "conventional" or "textbook" designs, and be prepared to challenge sacrosanct standards. He must be imaginative and exercise the ingenuity demanded by limited resources.

Relationship of Planning Policy and Design Criteria

By virtue of his education, background and experience, the sanitary engineer is the professional most qualified to translate the need for water into the physical need for pumps and pipes. However his freedom of action is infringed upon by many others - government leaders, financiers, planners, etc. At the same time his technical decisions may well have considerable impact on the economy of the community and the nation, its employment and manpower problems, and on the welfare of the community as a whole. Some of the spillover effects of water supply projects include:

(1) Imported materials and equipment and their effect on balance of payments and currency reserves. Funds for water supplies must be obtained in competition, of course, with alternative investments.

(2) Effects on local industry of using local materials and equipment. Where the appropriate local industry is non-existent, it may be that serious consideration should be given to stimulation of such industry even though short-run costs may be higher. For a centralized, continuing program, establishment of joint ventures between local and external manufacturers may be a feasible means of rapidly establishing local capability, both financial and technical. Benefits to village schemes should not be overlooked.

(3) Effects on plant reliability resulting from maintenance, repair and replacement of imported equipment. Closely related is the availability (or non-availability) of centralized procurement and warehousing of critical inventories.

(4) Effects on local employment, again, both long-run and short-run.

(5) Availability of construction and operating personnel. If the plant cannot be operated, it has failed as surely as if it were ineptly designed.

(6) Training of skilled personnel where few or none had previously existed. This may affect equipment selection and design. Such training should be considered in project planning. The recently created Department of Water Supply and Sanitation of the Yemen Arab Republic, established with the assistance of the U.S. Agency for International Development, is an excellent example [5]. Over 250 employees have been trained from the inception of the program in 1962, in this, a relatively underdeveloped country.

(7) Effects of financing policies on design. "Textbook" design periods reflect the time value of money within developed countries which is generally lower than in developing countries.

(8) Effects of stage development. What level of service and to whom? And when? Compatibility of system stages?

(9) The uncertainty of economic and political environment.

(10) Uncertainty due to lack of data on consumption and future demand. Cost and uncertainty are directly proportional.

(11) Social acceptance by the water users and development of community support.

(12) Community organization created for providing water supply may in many small communities be the first significant community-wide activity. Few other facilities enjoy a higher priority on a community-wide basis.

The above factors, vital in their impact on design practices, are matters of policy as well as technical criteria. Conversely feedback from policy makers is essential to the design and establishment of technical criteria. For example the aforementioned statement that "the limited funds available be used to give (some) water to as many of the people as possible rather than give a perfect supply to a few" is a policy statement with profound implications in establishing design criteria. To the extent that the above factors suggest alternative strategies, amenable to conscious choice, they can be further developed as planning criteria, not only for water supplies, but for all investments in the public sector of the economy.

The remainder of this paper is principally devoted to examining some of these factors, particularly the use of imported versus local materials and equipment, the design of labor-intensive, as opposed to capital-intensive, facilities, and the design problems attendant to the availability of skilled operating personnel.

Development of Local Design Standards

There is a need for design standards developed for developing countries and not derived from developed countries. This was very aptly expressed by the Fifteenth Session of the Regional Committee for Southeast Asia of the World Health Organization [6] in its conclusion that:

> "In the present stage of development of the majority of communities of this region, the methods, equipment, and the basic design factors commonly used in the highly developed and wealthier countries are often economically and technically beyond reach. There is a great need to devise and develop systems of water treatment and distribution and of preservation of water resources which are inexpensive to construct and simple to operate and maintain. To this end there is a concurrent need for research and development and for realistic re-appraisal of the fundamental bases of engineering design. Measures must be found to make full use of local materials, local skills, and the principles of self-help. Research and development should lead to standards for design, determination of design periods, maintenance, operation and management applicable to the conditions in the different countries of the region."

This may seem very self-evident, yet violations of these precepts abound, even within the nations represented at the meeting which adopted the above conclusion [7].

For example, in an important capital city, a new water treatment plant has recently gone into operation. This is a country where skilled labor is scarce and unskilled labor is plentiful and low in cost. Mechanization was carried to an extreme, with mechanical coagulation devices and mechanical sludge-removal equipment. Almost two years after operation, the sludge-removal equipment in one settling tank was not operating because a part was broken and had not been received from Europe where the equipment was designed and manufactured. After 18 months of operation, this settling tank was manually cleaned and was found to have accumulated less than two feet of sediment - certainly no indication that mechanical sludge-removal equipment had been necessary. Most incongruous of all, a large sampling table permitted samples to be taken from any one of dozens of points throughout the plant by merely flicking a switch. This expensive sampling table, also purchased from Europe at considerable cost, was of doubtful value because actually few samples were being analyzed.

In another important capital city, a new water treatment plant was built using literally hordes of men and women carrying baskets of earth on their shoulders and their heads from the excavations for the settling tanks. The plans for this plant as well as for plants already serving the city include modern, expensive, mechanical equipment for removing the sludge from the settling tanks without the need for manual labor. Apparently manual labor is adequate for the construction of the plant by local contractors, but the designing engineers must have felt that manual labor is not satisfactory for the removal of sludge and thus scarce foreign currency was expended on the importation of such equipment from abroad. One wonders about the reasoning that encourages such labor saving devices when labor is so abundantly available. The foreign

currency might better have been used for supplying piped water to more homes.

In still another capital city, a water filtration plant was recently constructed. During construction, laborers in great number could be seen pouring the concrete, carrying in the sand for the filters on their shoulders, and manually performing many other of the construction tasks. This plant has automatic filter controls and in addition is provided with a complex chemical feed system with stainless steel pumps with electric motors installed in a sub-basement. However, in this city the distribution system is often without water and under vacuum, and because the sewerage system is not adequate, the water supply is frequently contaminated. Cholera is an annual visitor. One wonders why automatic equipment and complex chemical handling systems are required. It cannot be to save labor because labor is a plentiful resource in that country. One of the reasons given for providing such equipment is that local operators cannot be depended on and the equipment can decide better, for example, when a filter needs to be washed. This argument is not valid as the maintenance of such equipment is generally more difficult than the operation it is to perform.

The above examples illustrate several points. First, water works are being constructed in increasing numbers serving increasing millions of people throughout the world. This is good. The greatest need, however, is not for incorporation of the most complex mechanical and electronic devices into treatment plants, but rather to bring water of adequate quality and quantity to as many people as possible. Design practice in any locality whether it be the United States or in developing countries should strive for the most economic application of available capital, material, and human resources. Certainly where manual labor is plentiful, where electronic specialists are few, where money for purchase of equipment abroad is limited, and where the greatest need is to serve as many people with water as possible, it does not make engineering sense to invest limited resources in labor-saving equipment. Perhaps more important than cost, reliability of the supply may actually be decreased. This is particularly true where adequate maintenance of such equipment cannot be assured.

Some economists have suggested that developing nations in their striving for industrialization "leap frog" more developed countries by installing the very latest automated equipment, thus enabling them to compete more readily with nations with large fixed capital costs in older equipment. This has been the case to some degree in those countries whose industries were devastated in World War II. This argument may or may not have validity for industries operating in international markets. However it is certainly not true for water supplies since they are monopolistic and do not compete in international markets.

Lest the foregoing comments be interpreted as a brief for no equipment, we hasten to add that there is a place for equipment or instruments that can do things better than they can be done by men. For example, the use of float switches for starting and stopping of pumps is superior to manual control. Remote control dials may be appropriate where distances are great. Equipment manufacturers have made a considerable contribution to water supply practice in the developed countries, and they also can in the developing countries. However, even if no currency problem exists, the equipment provided should be suited to the local situation.

In the majority of cases, the above examples do not reflect upon the competence or judgment of a country's own engineers. On close investigation, it was found that many of the fundamental decisions were made by consultants or equipment manufacturers from other countries. In other instances, the local engineers were not consulted or their opinions were disregarded. In some instances, the lack of local engineers has permitted projects to be conceived and executed by equipment manufacturers from the developed countries through so-called "turn-key" contracts where the contractor is primarily interested in the sale of equipment. Such equipment may be, from a functional point of view, quite efficient. In the developed country of the equipment's origin, where wages are high, interest rates low, and full employment prevalent, such equipment may also be efficient in an economic sense. But its use in situations where labor costs are low, unemployment is rampant, interest on capital high, and foreign exchange funds limited would seem to be, at best, questionable.

Engineers also need not discard a good solution just because it was perfected before their time. For example, the slow sand filter was highly developed before the end of the last century. For years slow sand filters have provided safe and reliable water supplies for many of the cities of Europe and the United States. Many are still in use in the northeastern United States; new units have recently been installed in Europe and England. One might be inclined to think that tradition is at the root of this practice; however, an extensive engineering and economic study, conducted by the London Metropolitan Water Board in the 1950's indicated that it was economical to continue to incorporate slow sand filtration in the treatment of Thames River water [8]. If slow sand filters have a place in Britain, a country with advanced technical and manufacturing resources, this type of treatment cannot be ignored when considering feasible alternatives anywhere. The very factors which weigh against the use of slow sand filters in an industrialized

economy, namely, high land costs, high capital construction costs, and high labor costs, are not applicable in developing countries. Furthermore, slow sand filters are reliable and require a minimum of mechanical equipment and chemicals for sound operation.

The limited use of equipment and instruments does not keep the work from being attractively built and a proud monument to the community and its engineers. For example, because concrete service reservoirs are often more economical than those of imported steel, they have in general been more attractive by far in the developing countries than in industrialized areas. The waterworks built for Manila in the 1930's continues to be far more attractive than more recent highly mechanized additions.

Some recent developments are indicative of the type of thinking that will be required in solving sanitary engineering problems. The development of large (1.5 Ton/Hour), but simple alum-cake solution feeders in Santiago, Chile [9], the Fordilla Service hydrant used on portions of the distribution system in Asuncion, Paraguay [10], the modification of the aqua privy as developed in East Africa [11] for use in low-cost, high density residential areas, and the mono-valve filter developed in Taiwan [12], are examples of what can be accomplished.

Use of Consultants

A major technical resource available to developing countries is the use of consulting engineers from developed countries, many of whom are making a major contribution to the global water supply effort. They have long experience in the preparation of feasibility reports and in the design of waterworks. They have specialists in many fields upon whom they can draw as a project develops. The best and most economical use of such consultants is when they provide this type of "know-how" but depend upon local engineers for services that can be handled best locally. The local engineers can collect data, make surveys, do drafting, supervise construction, and in general perform engineering services on the job at a much lower cost than can foreign consultants imported for these tasks. As local engineers gain experience in the specialty of water supply, the responsibility of outside consultants can gradually be reduced. Often, a consortium of a local and foreign engineer may be the best arrangement.

Lending agencies often require that a reputable and experienced consultant be employed on a project, and such experienced engineers may not be available locally.

It is extremely valuable that one of the responsibilities of a foreign consulting engineer, and this should be written into the contract, be the employment of local engineers and their training in an organized fashion. Projects of this type are now under way in Pakistan and Thailand.

Just as with imported equipment, the use of imported engineers has certain disadvantages. In designing a water supply system, it is necessary that the load on the system be established. An outsider, particularly one from another culture, labors under a handicap in this regard. How many people will use the water? Should they get the water from a public fountain, a yard tap, or indoor plumbing? What is the per capita consumption? What is the population of the city? How is it changing from a rural- to a city-centered population? For all these data the outside engineer must depend upon local information which the local engineer is better prepared to both gather and evaluate. Overdesign from a capacity viewpoint can be just as expensive as overdesign from an equipment standpoint.

In many developing countries little data exist on groundwater. Therefore outside consultants may be biased towards "safe" sources, that is, surface water, although groundwater may be more economical. Groundwaters have certain advantages which should not be ignored. Some of these are:

(1) Water systems obtaining raw water from wells can be more readily developed by stages.

(2) Wells can be closer to served areas generally than can surface water sources thus reducing pipe and pumping costs.

(3) Groundwater is less turbid reducing capital requirements for treatment.

(4) Groundwater quality is more uniform throughout the year.

Another area in which outside consultants are at a disadvantage is in preparation of cost estimates. Outside consulting engineers are often very much in the dark as to the cost of local materials and labor, especially labor. These estimates are particularly important in estimating local currency requirements. Oftentimes, consultants are instructed to keep that

cost to a minimum. If by this is meant an economical design, that is satisfactory, but if it implies an arbitrary cut in the estimates including elimination of contingencies and profits, it is a mistake that will be costly in the long run.

Development of Personnel

The comments on local engineering personnel touch on what is perhaps, after finances, the most serious present deficiency in community water supply programs, that is the shortage of trained local personnel. As a matter of fact, the problems of finance and personnel are very closely related. For example, at the Seventh International Water Supply Congress in Barcelona, a World Bank (International Bank for Reconstruction and Development) engineer stated that loan funds for water supplies are available at the present time but that there is a shortage of sound water supply projects. This shortage of "good" water supply projects is not due to lack of need, but rather to lack of personnel to formulate projects and to prepare project applications. Other engineers also have observed that some countries are reaching their capacity to use funds effectively, again not because of lack of need, but because of lack of personnel. Or as the senior author has commented elsewhere [13]:

> "It has already become evident, however, that the "bottleneck" in providing community water supply systems is not lack of water, because ample water resources for municipal supply are generally available, not lack of money, as the lending agencies are looking for sound water supply projects in which to invest, not lack of materials, because pipes and pumps are generally readily available at reasonable cost, and not lack of interest on the part of the people of the communities, who have demonstrated their need and desire for public water supply systems. The difficulty is the shortage of qualified engineers in the developing countries to conceive, investigate, promote, design, construct and manage water supply projects."

Inadequate engineering leads to delays, waste, poor construction, poor operation, and inefficient use generally of available resources.

One remedy for these problems is a large-scale effort to recruit more engineers for work in water supply and to provide specialized training for those already in the field. This requires many approaches, all taken simultaneously:

(1) Prepare more engineers by increasing the educational facilities and using those that exist more fully.

(2) Create graduate sanitary engineering curricula in local engineering institutions.

(3) Create intensive short courses for specialized training in the capital and in provincial centers. Educational institutions can help.

(4) Send engineers abroad for long and short-term specialized training. A word of caution is in order here: the conventional academic and M.S. programs in sanitary engineering in the developed countries are generally not appropriate for practicing engineers from developing countries, because the emphasis tends to be theoretical and directed to problems and solutions which must seem esoteric indeed when observed from these countries. While such courses might be suitable for engineers preparing for teaching careers in their own educational institutions, practicing engineers need training more specifically directed to their own practice.

Among the training centers in the industrialized countries is the International Program in Sanitary Engineering Design at the University of North Carolina at Chapel Hill. Some 50 engineers from more than 20 developing countries have completed 9 - 12 month programs of study which combines work at the University, in municipal water works, and in the offices of consulting engineers. They now occupy key positions at the local and national level, and some of them are responsible for organizing local training programs. Most important, these engineers are helping to establish a setting in which the technical resources of the industrialized sectors of the world can be adapted to the local resources in the developing countries to provide adequate water supply for the greatest number of people at reasonable cost.

In ten years, an estimated third of a billion people in urban centers in the developing countries will be needing water supply facilities that are not now available [3]. These projects will be competing not only for funds but for the engineers to conceive and design the projects.

It is not always realized that in addition to design engineers and system operating personnel, that successful water supply systems require support and participation from numerous other professional groups. These include health agencies, which monitor water quality, develop support, promote improvements, and educate the public; state or federal financing agencies, which regulate governmental borrowing; bonding agencies, which keep an eye on rates, repayment of debt, credit, etc.; consultants, either available on retainer or special commission; equipment manufacturers and distributors, available for parts and product information; and centralized data collection services, e.g., hydrological surveys.

Central Water Authorities

It may be advantageous in many countries to create a central water authority with limited or general powers. For example, a central agency could:

(1) Establish standard specifications for water supply equipment, e.g., pumps, and maintain a stock on hand. This action could (a) reduce the size of the total parts and equipment inventory needed within the country, and (b) stimulate local production.

(2) Prepare estimates of future demand as an aid to planning and as a stimulant to local industry.

(3) Centralize problems of foreign exchange. Often the tendency is to do without, as for example, publications, laboratory reagents, etc.

(4) Provide expert consultation to smaller communities on a "circuit-rider" basis.

(5) Develop central registers of qualified contractors and engineers.

(6) Encourage professional development through sponsorship of training programs, short courses, fellowships, etc.

(7) Conduct research and experimental investigations with applicability throughout the region.

(8) Maintain centralized data collections.

A system of fact recording and data collection reveals present conditions, reveals progress achieved in waterworks construction, and leads to improvement of water supply operation. Facts are a very powerful tool in obtaining support from the general public. They also help to reduce overdesign due to uncertainty.

For smaller communities within the country, or for the entire country in the case of smaller countries, the central authority could also take advantage of scale economies by constructing and/or operating water supply systems as well. This is particularly advantageous if surface water storage must be required. Such organizations are widely used in Central America, e.g., SNAA (Costa Rica), ANDA (El Salvador), SESP (Guatemala), SANAA (Honduras), and IDAAN (Panama).

Research and Development

Many problems of community water supply have yet to be explored scientifically. Although much of the research needed in developing countries can and should be borrowed from the literature published in the United States and Europe, much applied research can be conducted most efficiently in the country of need. This work need not be elaborate to be useful. For example, by operating a filter plant treating well water for the removal of iron and manganese, without the flocculation and sedimentation tank in front of the filter, investigators in Taiwan demonstrated that for the water in question, the resulting quality of water with the filters operated in such a manner was equivalent to that with the filters operated with flocculation and sedimentation. The obvious import of this research was that in constructing new facilities to treat water from this particular source, no investment in new flocculation and sedimentation basins was needed.

Some engineers have the mistaken notion that research and development is confined to universities and government laboratories. The above example shows that useful, inexpensive studies can be done in the field. Other non-university works of significance on filtration that readily come to mind include those of Bayliss [14], a plant operator, and Hudson [15], a design engineer.

Developments of this nature may very well be useful in more than one developing country. A new publication, Water Supply and Sanitation in Developing Countries, sponsored by the Community Water Supply Section of the United States Agency for International Development and published at the University of North Carolina has been established to report on such developments. Some examples of items published to date include:

(1) The use of constant-flow valves in Zambia [16]. These are inexpensive valves, installed in water service lines, which yield a constant rate of discharge regardless of pressure, thereby reducing waste and insuring even distribution of water between users at high and low elevations.

(2) Water supply in Indonesia using bamboo pipe [17]. Procedures for design and construction are outlined.

(3) A proportional chemical feeder developed in Swaziland [18]. This feeder uses a paddle-wheel for dosing control and requires no source of power other than the paddle-wheel.

(4) Alum-cake feeder developed in Chile [19]. A simple and inexpensive but highly effective alum-cake feeder for a large water plant is described.

The problem of research and development in developing countries is closely related to the problem of imported equipment described earlier. Water supplies, in comparison with other items of social overhead, such as highways, contain a very large percentage of non-labor items - materials and equipment. This is especially true of pipe installations. Although the cost-ratio of labor to non-labor items varies from country to country, it is essential that materials and equipment used within the individual country be produced within that country if major savings in hard currency requirements are to be realized.

This line of reasoning invites attention to pipe, since pipe of one type or another is usually the most important single non-labor cost item in water supply construction. This means then that study of pipe materials could have potential rewards. Looking at the most common diameters for smaller systems, ranging from say 2 to 6 inches in diameter, the most promising alternative to present use of galvanized or cast iron pipe is plastic pipe. Such pipe offers or would seem to offer certain advantages in developing countries: First, low capital investment is required for production equipment. Henderson [20] has indicated that an extruder machine capable of producing 2700 to 3100 feet of two-inch pipe in a six-hour day could be purchased in New York City in 1961 for $27,000. Such a plant would require a 25 horsepower motor plus a small heating load to warm the resin. Based on average U.S. labor and energy costs, the total cost of conversion from raw material to finished pipe is about 3 1/2 cents per foot for 2-inch pipe. Second, the light weight of plastic pipe which reduces transport costs of both raw material and finished product and lowers installation cost. And third, widespread availability of the basic materials in industrialized countries. Of course, disadvantages exist too. No brief for plastic pipe is intended, rather we are attempting to show a reasonable example of the type of investigation which could be made without great difficulty or expense by such a central agency as previously proposed.

Such investigations might also be made by an appropriate university. The newly established Regional School of Sanitary Engineering at San Carlos University in Guatemala is an excellent example of an institution which is making such studies on a regional basis, in this instance, for Central America. Where a Common Market exists, as in Central America, planning new water industries can be carried still further by distributing manufacture of various items among the participating countries.

The National University of Engineering of Peru has established a Center of Investigations to undertake the type of studies described herein [21].

These two University programs are assisted by the University of North Carolina and the U.S. Agency for International Development.

Justification of Community Water Supplies

In the competition for limited funds available for public investment, it has become more and more necessary to provide "hard" data on the desirability of a water supply improvement. This is somewhat disconcerting to the public health worker who no more needs an economic analysis to show that water supplies are desirable than does he need a precise measure of luminosity to assure him that the sun has passed below the horizon. Res ipsa loquitor. Nonetheless,

such data are becoming virtually mandatory in order to compete for limited funds. The traditional justification has been improvement of health and its accompanying increase in productivity of the working population.

Nearly every successful water utility operates on the principle that it pays its own way. Problems of equity abound in establishing rate structures. However, for most of the water systems of consequence, it has been demonstrated that a structure capable of recovering the full operation and debt service charges is feasible. Where public hydrants exist, they may require a charge against another governmental agency. Although in a sense this is borrowing from Peter to pay Paul, empirical observation has indicated this practice to be far superior to simple subsidy. Continued operation and growth of water supply systems depend upon local interest and initiative, and this can only be represented through continuing contributions of funds.

The notion that water is, or should be, free unfortunately lingers on. In this regard, it is interesting to note that throughout the world, individual water carriers have a good market where piped supply is not available, and in every case they collect much more per gallon by several-fold than the highest charge made by a water utility anywhere. And of course, the quality of such service is deplorable.

These remarks suggest several favorable aspects of water supply as a public investment, i.e., it can and should be self-sustaining, and secondly it has widely distributed benefits.

Water supply also has certain other advantages: it has visibility and can be dramatically sold; successful completion and operation can be reasonably expected; it offers a high rate of return as a health expenditure in developing countries; the technology is ready now; and minimal education of the public is needed to derive the benefits.

Water Supply and Sewerage

Provision of piped water within densely populated areas, of necessity, requires concomitant consideration of sewers. Unfortunately some central water authorities are hesitant about providing funds for sewers, feeling that they are unproductive investments [22]. The notion persists that water supply and sewerage are two separate entities. This is inevitable perhaps when local authorities have had to fight long, lonely battles to secure even a water supply system, and where elements of subsidy blurred the financial perspective even in respect to the water supply project.

In urban towns in India where water supply was long since installed and a sewer system held up for want of adequate "subsidy," the delay is costing dearly. Insanitation and mosquito nuisance have taken root and filiariasis is becoming endemic over an ever widening urban area in the entire country [23]. "Ironically enough, filiariasis control is fast assuming an increasing importance as a health measure with prophylactics pressed into service - This is but fighting the shadow and not the substance [23]."

The visible return from sewerage is not so attractive as a water supply or an electrical project. But the provision of sewerage will eliminate the need for maintaining an army of people engaged in the unpleasant task of night soil conservancy, transport, and disposal; maintaining cesspools; and maintaining crews to combat nuisances. Savings on anti-mosquito measures can be anticipated. Mortality and morbidity rates will decrease.

The cost of not providing water and sewerage facilities is inevitably greater than the cost of providing them.

Summary

Our principal argument has been that standards and policies for community water supplies should be developed within their own environmental framework. Although considerable assistance, guidance, and information are available from the more developed nations, the development of appropriate standards and policies ultimately would seem to be a task of local engineers and administrators. Although outside expertise is available, this is a situation where money cannot buy everything. The development of at least a cadre of local talent is necessary if local objectives are to be efficiently met. It should be noted that this is pertinent regardless of the source of funding.

May we also suggest that the attitude of the engineer and the administrator should be one of open-minded and continuous questioning of alternative means of achieving realistic goals,

and that results are the proper criteria for judging success - results in water for people, water for peace.

Bibliography

1. Campbell, E. P. "Statement Before Senate Foreign Relations Committee." International Cooperation Administration Document. Washington, D.C. 1959.
2. Wolman, Abel and Herbert M. Bosch. "U. S. Water Supply Lessons Applicable to Developing Countries." Journal American Water Works Association. Vol. 55. 1964. pp. 946-956.
3. Dieterich, Bernd A. and John M. Henderson. Urban Water Supply Conditions and Needs in Seventy-Five Developing Countries. Geneva, World Health Organization. 1963. p. 14.
4. Baity, H. G. "Community Water Supply in the Developing Countries: Departures from Normal Design Standards." Publication No. 122. Department of Environmental Sciences and Engineering, University of North Carolina. Chapel Hill, North Carolina. 1966. p. 4.
5. Ruiz, Aldelmo. "Efforts of U.S. Agency for International Development to Supply Water to People of Yemen." Journal American Water Works Association. Vol. 58. 1966. pp. 1247-1259.
6. World Health Organization. "Community Water Supplies, Conclusions and Recommendations Arising Out of the Technical Discussions Held at the Fifteenth Session of the Regional Committee for South East Asia." SEA/Env. San./25. New Delhi. 1962. p. 2.
7. Brown, James C., and Daniel A. Okun. "An International Program in Sanitary Engineering." Ingenieria Sanitaria. Vol. 19. October 1965. pp. 11-20.
8. London Metropolitan Water Board. Reports of the Director. London. 1954 through 1960.
9. Pivet Poblete, Luis. "Dosificacion de Alum-Cake en la Planta de Filtros de Las Vizcachas." Ingenieria Sanitaria. Vol. 15. 1961. pp. 111-119.
10. Borjesson, E. K. G. and Carlos M. Bobeda. "New Concept in Water Service for Developing Countries." Journal American Water Works Association. Vol. 56. 1964. pp. 853-862.
11. Vincent, L. J., W. L. Algie, and G. v.R. Marais. "A System of Sanitation for Low Cost High Density Housing." C.C.T.A./W.H.O. Symposium on Hygiene and Housing in Relation to Housing. Niamey. 1961. 40 pp.
12. Sanitary Engineering Division, Taiwan Public Works Bureau. "Report on the Test Run of Monovalve Filter." Taipei, Republic of China. No Date. 7 pp.
13. Okun, Daniel A. "Preparing Engineers for Community Water Supply Programs in Developing Countries." Presented at the Seventh International Water Supply Congress. Barcelona October 1966. (To be published in Aqua).
14. Bayliss, J. R. "Nature and Effects of Filter Backwashing." Journal American Water Works Association. Vol. 51. 1959. pp. 126-156.
15. Hudson, H. E., Jr., "Functional Design of Rapid Sand Filters." Proceedings, American Society of Civil Engineers. Vol. 89, No. SA1. 1963. pp. 17-28.
16. Marais, G. v.R., and F. E. McJunkin, Editors. "Reduction of Water Waste by the Use of Constant-Flow Valves." Water Supply and Sanitation in Developing Countries. No. 2. 1966.
17. Marais, G.v.R., and F. E. McJunkin, Editors. "Water Supply Using Bamboo Pipe." Water Supply and Sanitation in Developing Countries. No. 3. 1966.
18. Marais, G.v.R., and F. E. McJunkin, Editors. "A Proportional Feeder for Small Water Purification Plants." Water Supply and Sanitation in Developing Countries. No. 5. 1966.
19. McJunkin, F. E., Editor. "Simplified Alum-Cake Feeder." Water Supply and Sanitation in Developing Countries. No. 12. 1967.
20. Henderson, John M. "Development of Within-Country Production of Materials and Equipment for Community Water Supply Systems." Unpublished report prepared for International Cooperation Administration. Washington. 1961. 38 pp.
21. Brown, James C. and Augusto A. Navarro. "Sanitary Engineering Research in Peru." Presented at X Congreso Interamericano de Ingenieria Sanitaria, San Salvador, El Salvador, Central America. December 1966. (Submitted for publication in Ingenieria Sanitaria.)
22. World Health Organization. "The Influence of Community Water Supplies on Health and Social Progress." World Health Organization Chronicle. Vol. 18. 1964. pp. 187-188.
23. Ministry of Health, Government of India. "Proceedings and Recommendations." Seminar on Financing and Management of Water and Sewage Works. Vigyan Bhawan, New Delhi. 1964.

Additional References

Cox, Charles R. "Functional Design in Water Treatment Plants." Proceedings of the VIII Congreso of the Inter-American Association of Sanitary Engineering AIDIS. Washington. 1962. pp. 158-167.

Lamb, James C., III and Donald T. Lauria. "An International Program in Sanitary Engineering Design." International Conference on Water for Peace. Washington, D.C. 1967, P/510.

Logan, John A. "The International Municipal Water Supply: A Health and Economic Appraisal." The American Journal of Tropical Medicine and Hygiene. Vol. 9. 1960. pp. 469-476.

Organizacion Panamericana de la Salud. "Tubericas Plasticas." Publicacion Cientifica No. 113. Washington. 1965.

Organizacion Panamericana de la Salud. "Conferencia Regional Sobre Abastecimiento de Agua en las Americas." Publicacion Cientifica No. 95. Washington. 1964. See especially, Charles A. Morse, Jr. "Materiales y Equipos; Su efecto Sobre Las Novinas de Deseno de Sistemas de Abastecimiento de Agua." pp. 74-82.

Organizacion Panamericana de la Salud. "Conferencia Regional Sobre Abastecimiento de Agua en las Americas." Publicacion Cientifica No. 132. Washington. 1966. See especially, Humberto Romero Alvarez. "Los Materiales y Equipo en las Obras de Abastecimiento de Agua Potable." pp. 102-106.

U. S. Agency for International Development. Feasibility Studies; Economic and Technical Soundness Analysis: Capital Projects. Washington. 1962. 140 pp.

Waterston, Albert. Development Planning: Lessons of Experience. Baltimore. Johns Hopkins. 1965.

World Health Organization. Report on the Group Meeting of Community Water Supply. EM/ES/143. WHO Regional Office for the Mediterranean. Beirut. 1962.

* * *

WATER SUPPLY AND SANITATION IN DEVELOPING COUNTRIES

AGENCY FOR INTERNATIONAL DEVELOPMENT

UNIVERSITY OF NORTH CAROLINA

Frederick E. McJunkin, Editor

Series 3 (1969)

AID-UNC/IPSED Item No. 20

DESIGN OF SMALL GRIT CHANNELS

by

Gerrit V. R. Marais

ABSTRACT

Grit channels are used in water and sewage treatment to remove grit and silt from raw water or sewage to prevent their settling in ponds, tanks, or other treatment units with resultant loss in capacity or difficulty of subsequent removal and, also, to prevent excessive wear or scouring of pumps, pipes, and channels. Design, construction, and operation of small grit channels requiring no mechanical equipment are described in detail. Particular attention is given to use of grit channels for preliminary treatment prior to oxidation ponds.

(Key words: grit channels, sewage treatment, settling, preliminary treatment, oxidation ponds)

Introduction

In many developing countries the inorganic grit load in sewer-borne waste waters can be very high. This is due to the practice in some communities of using soil, sand, or silt as scouring aids in cleaning domestic utensils. Also, with the Asian[1] type flush latrine soil on the user's shoes is washed into the latrine during cleaning, and flushed to the sewer. Grit loads up to one cubic yard per million UK gal[2] (0.17 cubic meters per 1000 cubic meters) per day of waste flow, are not unusual with an average of about 12 cubic feet (0.05 m^3) in many parts of Africa.[3]

Grit, if not removed before discharge to oxidation ponds, will settle around the discharge point in the primary pond. With high concentrations of grit in the influent, banks of grit will build up eventually to the surface, in a relatively short time. These banks disrupt mixing of the influent flow with pond contents, causing unsightly conditions and odor problems, and reduce pond capacity.

---

[1] Also called Continental, Turkish, Squat or Eastern.

[2] One UK gallon is equal to 1.201 US gallons.

[3] Even heavier loads have been reported for rainy-season raw water sources in the cordillera of eastern South America.

This publication series is prepared by the International Program in Sanitary Engineering Design (IPSED), under the sponsorship of the Community Water Supply Branch, Agency for International Development (AID), United States Department of State. IPSED is a program of the Department of Environmental Sciences and Engineering, School of Public Health, University of North Carolina at Chapel Hill. Correspondence should be addressed to Frederick E. McJunkin, Editor, IPSED, Box 630, Chapel Hill, N.C., 27514, U.S.A. Publications are supplied free of charge to engineers working in developing countries and may be obtained from U.S. embassies, U.S.A.I.D. missions, or by writing the University. Material for publication is invited.

Referring in particular to oxidation ponds, grit removal can be accomplished by two methods. The first is to pretreat the effluent in anaerobic lagoons; the grit accumulates in the lagoon and is periodically removed. This is the simplest method of dealing with the problem, but cannot always be used; for example, anaerobic ponds near built up areas may cause odor problems.

The second method is to use a grit channel or other degritting facility. Many of these facilities have mechanical parts and are power operated. These are relatively expensive to install, and operation and maintenance require skilled personnel - usually beyond the financial and technological resources of small communities in developing countries. Unskilled labour, however, is normally readily available. Hence it is important to consider degritting devices without mechanical aids and power requirements and needing only unskilled labour for satisfactory operation. Of these the simplest is a grit channel cleaned by hand labor.

The criteria by which grit channels are designed are to regulate, for all flows, the velocity of flow to a constant value, usually one foot per second (0.3 m per sec) and a time of passage through the channel of about one half to one minute. These criteria provide sufficient time for most of the grit to settle on the floor of the channel, but insufficient time and sufficient turbulence to keep the bulk of the organic material in suspension.

Observations on grit channels in Zambia for example, have indicated that the grit is composed of a large percentage of fine sands and silts (0.2 mm equivalent diameter and less). If the channel is designed using the criteria above an appreciable proportion of the fine material passes through the channel without settling. Settlement of the fine material is increased by reducing the velocity of flow through the channel to about 3/4 foot per second; the lower velocity however also causes settlement of more of the organic material.

Grit channels operating at 3/4 foot per second velocity and about one minute retention time will reduce the fine sand fraction (0.2 mm) by about 95 per cent. Finer fractions will be reduced by lesser and larger fractions by greater percentages. In developing countries it is recommended to use a velocity of 3/4 foot per second for degritting raw sewage before discharge to oxidation ponds.

VELOCITY CONTROL METHODS

Constant velocity in the grit channel is achieved by providing flow control devices at the outlet of the channel. There are two kinds: proportional flow weirs and critical flow flumes.

The shape of a proportional flow weir is such that the flow varies proportionally with the head on the weir so that the velocity of flow in a channel of rectangular cross-section remains constant. When designed for small flows the shape of the weir has fine corners, which tend to clog with debris. Also, the weir cannot operate under submerged conditions but requires free fall, hence there is a loss of head equivalent to at least the full depth of flow over the weir - a disadvantage in areas of flat topography, where every inch of head needs to be utilized. References dealing with the design of grit channels controlled by proportional flow weirs are listed in the bibliography.

In critical flow flumes the flow is forced to pass through the critical depth (i.e. the flow changes from tranquil to shooting flow). This is achieved in a number of ways - by putting a stricture in the width of the channel, or a hump on the floor of the channel, etc. If the depth of flow is measured at the point in the flume where the flow passes through the critical depth the flow can be measured with great accuracy. Unfortunately this point changes with the depth of flow and the approach velocity, so as an approximation a depth is measured at a point upstream of the flume throat and the flume constant obtained by calibration. To ensure accuracy, manufacturers of flumes specify the shape of the flume and approach and exit channel dimensions to close tolerances.

As a means of velocity control critical flow flumes have advantages in that (1) some of the head lost through the flume is recoverable by means of a hydraulic jump downstream; (2) the flume can serve a dual purpose, as a velocity control and a flow measuring device - for the latter purpose only one upstream depth measurement is necessary; (3) the flume is self-cleansing. However the head-flow relationship for critical flow flumes is of the type:

$$Q = a H^{3/2}$$

where Q is the flow, H the head, W the width of the flume throat, and α a constant (flume constant). As the control flume section is rectangular in cross-section, the velocity varies nonlinearly with the head.

To provide an approximately constant velocity in the grit channel over a range of flow two methods are available:

In the first method the cross-sectional shape of the channel is made parabolic. By appropriate calculation of the parabola dimensions the velocity in the grit channel can be designed to a constant value over the whole range of flow expected. This method of control is widely used in big schemes and with satisfactory results but with small flows where big grit loads are expected and where operational control is poor the grit storage space necessary is relatively large and it is difficult to provide sufficient storage space without disrupting the parabolic shape of the grit channel. The procedure for design is set out by Camp (1942).

In the second method the flume is set lower than the floor of the grit channel. With this control method the cross-section of the grit channel is rectangular and it is a simple matter to provide adequate grit storage space. Over the range of flow the velocity in the grit channel deviates from the design value but the magnitude of this deviation can be restricted to acceptable limits. It provides probably the simplest form of velocity control and for this reason will be given detailed consideration.

There are a number of designs for critical flow flumes and any of these could be used to control the flow in the grit channel. However, in sewage practice the Parshall flume has particular merit in that (1) the head-flow relationship is not significantly affected by the channel approach velocity, consequently the approach channel dimensions and elevation are not critical factors, and (2), from 60-70 per cent of head lost through the flume can be recovered by means of a hydraulic jump without the head-flow relationship of the flume being affected.

In Figure 1 a diagrammatic cross-section and plan of a Parshall flume and grit channel is shown. In Tables 1 (a) and 1 (b) the dimensions of Parshall flumes with different throat sizes are listed - Table 1 (a) is in feet and inch units, Table 1 (b) in metric units. In Table 1 (b) equivalent throat sizes have been rounded to the nearest convenient metric unit corresponding to 3, 6, 9, and 12 inch throat sizes. The other dimensions are direct conversions of the dimensions in Table 1 (a) to ensure that the depth-flow relationship for the flumes conform to the experimentally established functional relationship expressed in equations 1 below.

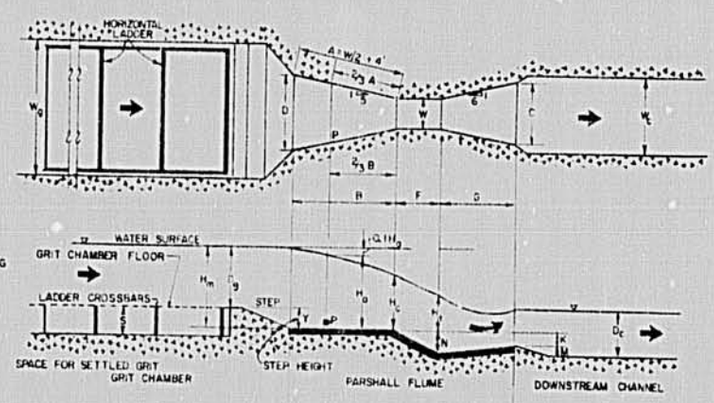

DIAGRAMATIC CROSS-SECTION AND PLAN OF CONTROL FLUME FOR GRIT CHANNEL

FIGURE 1

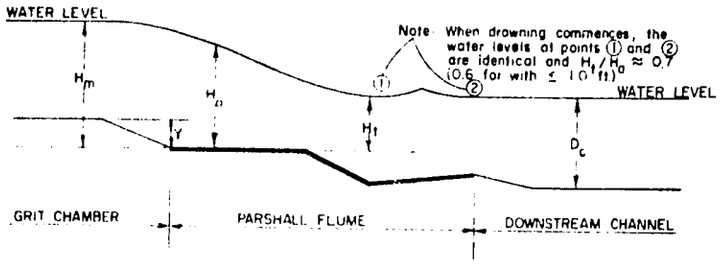

WATER PROFILE AT DROWNING

FIGURE 3

TABLE 1(a)

Dimensions of Parshall Flume. (Feet-inch units)

W in.	A ft. in.	B ft. in.	C ft. in.	D ft. in.	F ft. in.	G ft. in.	K ft. in.	N ft. in.
3	1-6 3/8	1-6	0-7	0-10 3/16	6	12	12	2 1/4
6	2-0 7/16	2-0	1-3 5/8	1-3 5/8	12	24	24	4 1/2
9	2-10 5/8	2-10	1-3	1-10 5/8	24	18	18	4 1/2
12	4-6	4-4 7/8	2-0	2-9 1/4	24	36	36	9

TABLE 1(b)

Dimensions of Parshall Flume. (Metric units)

W cm	A cm	B cm	C cm	D cm	F cm	G cm	K cm	N cm
7.5	46.68	45.73	17.78	25.88	15.24	30.49	2.54	5.72
15.0	62.09	60.97	39.70	39.70	30.49	60.97	7.62	11.43
22.5	87.97	86.38	38.11	57.48	30.49	45.73	7.62	11.43
30.0	137.19	134.34	60.97	84.48	60.97	91.46	7.62	22.86

For meaning of symbols refer to Figure 1.

Flow Through The Parshall Flume

The base of the flume (see Figure 1) forms the reference level for all head measurements. The head, H_a, is measured at point P and equations 1(a) and 1(b) relate H_a with the flow, Q,

$$Q = 4.1\ W\ (H_a)^{3/2} \qquad \text{. . . . . 1(a)}$$

where W = Width of throat in feet (ft)

H_a = Head of liquid above flume base at A in feet

Q = Flow in cubic feet per second (cfs)

$$Q = 2.27\ W\ (H_a)^{3/2} \qquad \text{. . . . . 1(b)}$$

where W = Width of throat in metres (m)

H_a = Head of liquid above flume base at A in metres

Q = Flow in cubic metres per second (m^3/sec)

The head, H_m, in the grit channel is found from

$$H_m = 1.1\ H_a$$

Hence equations 1(a) and 1(b) can be conveniently written in terms of H_m as follows:

$$Q = 4.1\ W\ \left(\frac{H_m}{1.1}\right)^{3/2} = 3.554\ W(H_m)^{3/2}\ \text{cfs} \qquad \text{. . . . . 2(a)}$$

$$Q = 2.27\ W\left(\frac{H_m}{1.1}\right)^{3/2} = 1.968\ W(H_m)^{3/2}\ m^3/\text{sec} \qquad \text{. . . . . 2(b)}$$

Alternatively from equations 2(a) and 2(b)

$$H_m = \left(\frac{Q}{3.554W}\right)^{2/3} \text{ feet} \qquad \text{. . . . . 3(a)}$$

$$H_m = \left(\frac{Q}{1.968W}\right)^{2/3} \text{ metres} \qquad \text{. . . . . 3(b)}$$

The relationships between H_m, W, and Q according to equations 3(a) and 3(b) are shown in Figures 2(a) and 2(b) respectively. Note that the head-flow relationship is linear when plotted on log-log graph paper. The head-flow relationship should not be used for design outside the limits shown in Figures 2.

Limitation of Flow Formulation

The formulation expressed in equations (2) is no longer correct when: (1) the flow exceeds a certain absolute value. This is a limitation due to the geometry of the flume. In the case of the Parshall flume the limitation is set by the dimension N (see Figure 1):
H_a must not exceed 10N, substituting in equations 1:

$$Q_{(maximum)} = 4.1\ (10N)^{3/2}\ \text{cfs} \qquad \text{. . . . . 4(a)}$$

$$Q_{(maximum)} = 2.27\ (10N)^{3/2}\ m^3/\text{sec} \qquad \text{. . . . . 4(b)}$$

These maximum flows are marked on the diagrams in Figures 2(a) and 2(b). Also note that for each flume throat width there is a minimum flow below which equations 3 do not hold; these values are based on experimental data.

(2) the level head of flow (relative to the flume base) at the throat, H_t, exceeds $0.6H_a$ ($0.7H_a$ in flumes with throat widths greater than one foot). Then "drowning" of the flume occurs whereupon the flow is no longer independent of the downstream conditions. Although the relationship

$$H_t = 0.6\,H_a \qquad \ldots\ldots\ldots (5)$$

is simple, the practical problem is that it is very difficult to determine the value of the H_t beforehand and hence it is not possible to check if it satisfies equation 5. However, Leliavsky (1965) made an experimental observation of considerable practical value in the design of these flumes: when drowning commences the liquid surface levels in the downstream channel and at the throat are approximately the same. Consequently the downstream surface level should not exceed $0.6\,H_a$ at all flows. (See Figure 3).

Velocity Control

To obtain an approximately constant velocity in the grit channel it was stated that the Parshall flume is lowered a distance (called the step height) below the floor level of the grit channel. The step height, Y, (see Figure 1) is determined on the assumption that at two flow rates, Q_{max}, Q_{min}, the velocity, V, in the grit channel is equal to a preselected value.

Since $Q = AV = W_g D_g V$, then

$$W_g D_{max} V_{max} = Q_{max}$$

$$W_g D_{min} V_{min} = Q_{min}$$

but at Q_{max} and Q_{min}

$$V_{max} = V_{min} = V$$

i.e.

$$\frac{D_{max}}{D_{min}} = \frac{Q_{max}}{Q_{min}} \qquad \ldots\ldots\ldots (6)$$

Now

$$D_g = H_m - Y \qquad \ldots\ldots\ldots (7)$$

Hence substituting equation 7 in equation 6

$$\frac{H_{m(max)} - Y}{H_{m(min)} - Y} = \frac{Q_{max}}{Q_{min}} \qquad \ldots\ldots\ldots (8)$$

From equations 2(a) and 2(b) substituting for H_m in equation 8

$$\frac{1.1\left(\frac{Q_{max}}{4.1W}\right)^{2/3} - Y}{1.1\left(\frac{Q_{min}}{4.1W}\right)^{2/3} - Y} = \frac{C'\,(Q_{max})^{2/3} - Y}{C'\,(Q_{min})^{2/3} - Y} = \frac{Q_{max}}{Q_{min}}$$

(C' is a constant introduced for simplicity).

Let $R = Q_{max} / Q_{min}$ and solving for Y

$$Y = \frac{R^{1/3} - 1}{R-1} H_{m(max)} \qquad \text{. . . . . (9)}$$

$$= C_r H_{m(max)} \qquad \text{. . . . . (10)}$$

where

$$C_r = \frac{R^{1/3} - 1}{R-1} \qquad \text{. . . . . (11)}$$

Note that C_r is a function of R only.

In Table 3 the values of C_r for different values of R are listed and these are plotted in Figure 4. The diagrams in Figures 2 and 4 allow rapid solution of some of the grit channel calculations as illustrated in the design example below.

DESIGN APPLICATION

Design a grit channel to treat the influent to an oxidation pond. Future population is estimated at 7,500, present population 2,000. Data from neighboring communities indicate an eventual waste water flow of between 20 and 30 UK gal per person per day. Grit load is estimated at 12 cubic feet per million UK gal per day. The pond is located in an area of flat topography and in order to balance cut and fill, the head available must be utilized to best advantage.

Solution:

Assume (1) Maximum daily flow is 3 times mean daily flow.

(2) Design velocity in grit channel is 0.75 feet per second.

(1) Maximum Design Flow

Mean daily flow = 7,500 x 30 = 225,000 UK gal/day

Maximum daily flow = 3 x 225,000 = 675,000 UK gal/day

= 1.2 cfs

(2) Minimum Design Flow

In this problem it is difficult to estimate the minimum flow. In any event as the community grows the minimum flow will gradually increase so that any reasonable estimate will do.

Estimated initial total daily flow (at 20 UK gal per person per day) = 2,000 x 20 = 40,000 UK gal per day - 0.075 cfs.

The ratio of maximum to minimum flow is greater than 12. For R greater than 12, at intermediate flows the deviation of the grit channel velocity from the selected value (0.75 ft/sec) becomes appreciable. Hence for design purposes accept R = 12, which gives the minimum design flow as 0.1 cfs.

(3) Flume Size

The flume size is chosen considering maximum and minimum flows and the head available. If the head available is limited and the flows are within the range of two flume throat sizes, the larger size requires a lower head rise for the same flow. This has the effect of increasing the width of the grit channel. In the present instance the low minimum flow (0.1 cfs) must be considered when selecting the flume and a 3-inch flume is indicated. At the maximum expected flow (1.2 cfs) the depth of flow will still only be 1.24 feet, hence the flume should be satisfactory.

(4) Step Height Y

Data: $R = 12$, $Q_{max} = 1.2$ cfs

From Figure 4 or equation 11, $C_r = 0.117$

From Figure 2(a) or equation 3(a), $H_{m(max)} = 1.240$ ft.

Hence from equation 10, $Y = 0.117 \times 1.240 = 0.145$ ft.

$= 1.74$ inches

say, 1 3/4" (0.146 ft).

(5) Width of Grit Channel

Data: $V = 0.75$ ft, $Q_{(max)} = 1.2$ cfs

Depth of flow in grit channel, $D'_{(max)} = H_{m(max)} - Y$

$= 1.240 - 0.146 = 1.084.$

Width of channel, $W_g = \dfrac{Q_{max}}{V\,D_{max}} = \dfrac{1.2}{0.75 \times 1.084} = 1.42$ ft

say, 1.5 ft.

(6) Length of Grit Channel

Data: Retention time = 1 minute (60 seconds), flow velocity = 0.75 ft/sec.

Hence length = 60 x 0.75 = 43.0 ft.

(7) Velocity Variation with Flow in Grit Channel (optional calculation)

Q cfs	H_m^* ft	D_g^{**} ft	V*** ft/sec
0.1	0.234	0.088	0.76
0.15	0.307	0.161	0.62
0.3	0.49	0.344	0.58
0.6	0.78	0.634	0.63
0.9	1.02	0.874	0.69
1.2	1.24	1.094	0.73
1.5	1.44	1.294	0.76

* from Figure 2(a)

**$D_g = H_m - Y$ (D_g = depth of flow in channel)

***$V = Q/(D_g W_g)$

A plot of V versus Q is shown in Figure 5. It indicates that at flows between the maximum and minimum the velocity in the grit channel may reduce to 0.6 ft per sec. This value is probably near the lower limit of acceptable grit channel velocity. In general the maximum deviation from the design velocity decreases as R increases.

(8) Grit Storage

In small installations it is advisable to provide from 3 to 7 days grit storage space in the channel for adequate supervision and control is often not strictly exercised. For example, if the laborer is sick the channel may not be cleaned for a number of days. Usually no laborer is in attendance over weekends and holidays.

Assume: 7 days grit storage space.

Data: Daily flow = 225,000 UK gal.; grit concentration = 12 cubic ft per million gal.

$$\text{Seven day grit volume} = \frac{225{,}000 \times 12 \times 7}{1{,}000{,}000} = 18.9 \text{ cubic ft.}$$

Depth of storage required in grit channel (S)

$$S = \frac{\text{grit volume}}{W_g \times \text{length of channel}}$$

$$S = \frac{18.9}{1.5 \times 43} = 0.29 = 3\ 1/2 \text{ inches.}$$

The storage space can of course be increased still further by increasing the depth. The grit storage space is provided by lowering the floor level of the grit channel between the penstocks. In order not to disturb the velocity relationships in the channel, loose "ladder" sections are laid in the grit storage area, the vertical depth of the ladder section being equal to the depth of the grit storage space, i.e. 3 1/2 inches. (See Figures 1 and 6). The crossbars act as hydraulic foils causing points of low pressure behind each "rung" and are believed to enhance the deposition of grit. The sections are made from aluminium or from hard wood which has a higher density than water.

Two channels are provided so that one may be isolated, drained and cleaned while the other is in operation. Each channel is isolated by means of two sliding gates (penstocks), one at each end of the channel. Drainage of the channels to the pond is through a 2-inch diameter pipe with valves at the inlet and outlet. The valve at the outlet is essential to prevent entry of frogs to the pipe where they die and very effectively block the drain pipe. (Fig. 6).

(9) Sewer Invert Level

The invert level of the influent sewer discharging to the bar screen well upstream of the grit channels is governed by the condition that during the daily low flow period there is free flow in the sewer. At higher flows the sewer is flooded due to the rise of the water level in the grit channel and deposition of grit and organic material may take place in the pipe, but will be scoured during free flow periods. A design procedure is to set the invert of the sewer at the level that ensures free flow at the expected minimum daily flow under maximum mean daily flow conditions.

In the example considered, assume the minimum daily flow at maximum mean flow (0.4 cfs) is 0.1 cfs. For a 3-inch flume the water level, H_m, in the grit channel at this estimated minimum daily flow from Figure 2(a) or equation 3(a) gives

$$H_m = 0.23 \text{ ft}$$

which is accepted as the invert level of the inflent sewer relative to the base of the Parshall flume.

(10) Downstream Conditions

In the layout shown in Figure 6 the Parshall flume serves both as a control and flow measuring device, hence the floor level of the downstream channel must be lowered sufficiently to ensure that the flume will not be drowned by the water level rising too high. The water level in the downstream channel is determined assuming that there is free fall to the inlet pipe well. (See Figure 6). The depth of flow is then given by

$$D_c = \left(\frac{Q}{3W}\right)^{2/3} \qquad \ldots\ldots\ldots \quad (12)$$

Where D_c = Depth of flow in downstream channel in feet

W = Width of channel at point of free fall

Q Flow in cfs

Assuming the downstream channel is 1 ft wide.

At maximum flow (1.2 cfs)

$$D_c = \left(\frac{1.2}{3}\right)^{2/3} = (0.4)^{2/3} = 0.33 \text{ ft.}$$

At 1.2 cfs the head, $H_{m(max)}$, in the Parshall flume is 1.24 ft, i.e.

$$H_a = H_m / 1.1 = 1.24/1.1 = 1.13 \text{ ft.}$$

To prevent drowning, $H_t < = 0.6H_a$, i.e. $H_t \leq 0.6 \times 1.13 = 0.68$ ft. That is at 1.2 cfs the water level in the channel downstream of the flume must not exceed 0.68 ft. The floor level in the downstream channel relative to flume base (R.L. = 0.00) is $0.6\ H_a - D_c = 0.68 - 0.33 = 0.35$ feet, i.e. this level is higher than the flume base. The downstream channel cannot be higher than the level at point K (Figure 1), which from Table 1 (a) is -1 inch (-0.084 ft) and consequently the floor level is set at -0.084 ft.

The downstream floor level is normally a critical factor only when a separate measuring flume is installed downstream of the Parshall flume[4] for then the width of the channel is fixed. Otherwise the depth of flow can always be reduced by widening the downstream channel.

(11) Flow Measurement

The head of flow through the flume is measured in the well next to the flume. (Figure 6). Spot measurements can be made with a graduated measuring stick. Given the head, discharge can be calculated using equations (1). Estimates of daily flow can be obtained from head measurements at 1/2 hour intervals over the period of a day. Continuous recordings of flow or head are most simply obtained by measuring the pressure on a dip tube suitably set in the well and recording this value on a clock wound recorder. This method however requires a compressed air source, and if a power-driven compressor is not available either a compressed air bottle or a container pressurized by a manually operated air pump will be needed.

Float recorders are also used. These require a big well with the recorder shelter often built over the well The recorder must be isolated from the well by wooden floor boards (or a steel plate), the float wire passing through a small diameter hole in the boards. The recorder shelter must be well ventilated otherwise corrosion problems result due to the formation of sulphuric acid from the hydrogen sulphide gas generated in the well.

[4] A separate measuring flume is installed when accurate flow measurements are required, as the Parshall flume is accurate only to about five percent.

It is essential that the well be provided with a drain, similar to that for the grit channel. During draining, the well contents are agitated to assist in flushing the sludge and grit.

Automatic recording instruments require continuous and skilled attention and are not justified in small installations unless operational or research data are required.

A nomograph for converting Parshall flume head measurements to discharge appears (p. 18) in the Water Supply and Sanitation in Developing Countries Special Reprint: "Practical Hydraulics for the Public Works Engineer."

(12) Level of Pond Inlet Pipe

The downstream channel discharges to the pond pipe inlet well (see Figure 6). For conservative design the floor level of the well is set half the inlet pipe diameter below the channel floor level; the head available should then be sufficient to prevent drowning of the control flume.

The invert of the pipe inlet is set about 2 inches minimum above the water surface level in the primary pond.

Performance

An experimental check on the depth flow-relationship in a grit channel was obtained on an installation in Zambia. The grit channel was controlled by a 3 inch Parshall flume with a step height of 3/4 inch. Downstream of the Parshall flume was a commercial 6-inch Venturi flume which had depth-flow relationship approximately conforming to equation (12). For a number of different flow rates the head on the Venturi flume was plotted against the depth of flow in the grit channel, i.e.

$$D_{grit} = (Q/4.1W)^{2/3} - Y$$

$$H_{flume} = (Q/3W)$$

In Figure 7 are plotted the theoretical curve and also the experimental values describing the relationship between D_{grit} and H_{flume}. It is clear that there is good agreement.

Operational Problems

The main operational problem stems from a misunderstanding of the mode of operation of the grit channel. For example, very often the two channels are used simultaneously thus reducing the velocity in the channels to half the design values. A solution is to post a notice such as:

"These grit channels will not operate correctly unless one only is in use at any time".

If adequate security fencing around the installation is not provided, it is advisable to provide chain padlocks on the penstocks and the barscreens; the padlocks must be made from corrosion resistant materials.

References

Proportional Flow Weirs

Stevens, J.C., "Proportional Weirs for Sedimentation Tanks," Proceedings, American Society Civil Engineers, Vol. 82, No. HY3, pp. 1015-1 to 1015-23 (June 1956).

Smith, Edward Gerald., "A Weir with Flow Proportional to Head," Engineering News-Record, Vol. 117, pp. 679 and 904 (12 November 1936).

American Society Civil Engineers, "Sewage Treatment Plant Design," Manual of Engineering Practice No. 36, New York, N.Y., 1959, pp. 69-71.

Parabolic Grit Channels

Camp, Thomas R., "Grit Chamber Design," Sewage Works Journal, Vol. 14, No. 2, pp. 368-381 (March 1942).

Parshall Flumes and Flow Control

Leliavsky, S., Irrigation Engineering, Chapman & Hall, Ltd., London, 1965.

Babbitt, Harold E., and Baumann, E. Robert, Sewerage and Sewage Treatment, John Wiley & Sons, Inc., New York, 1967, pp. 425-430.

Skogerbee, Gaylord V., et al, "Design and Calibration of Submerged Open Channel Flow Measurement Structures: Part 2 - Parshall Flumes," Report WG 31-3, Utah Water Research Laboratory, Logan, Utah, 1967. Contains extensive charts and tables for flow measurement.

Soucek, E., Howe, H.E., and Mavis, F.T., "Sutro Weir Investigations Furnish Discharge Coefficients," Engineering News-Record, Vol. 117, pp. 679 and 904 (12 November 1936).

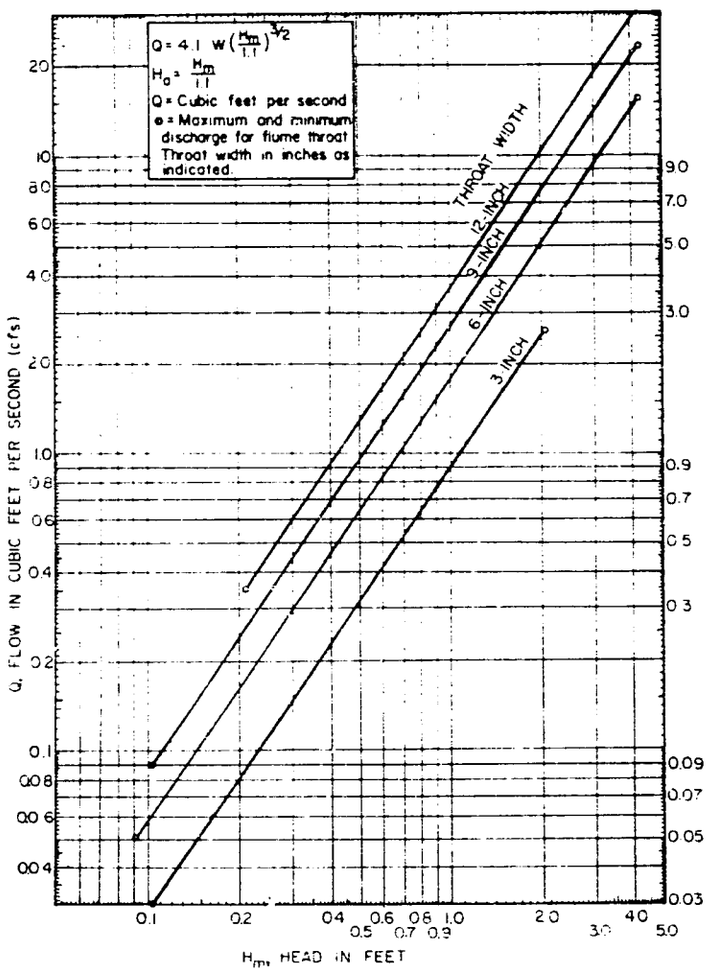

HEAD FLOW RELATIONSHIP FOR PARSHALL FLUMES

FIGURE 2 (a)

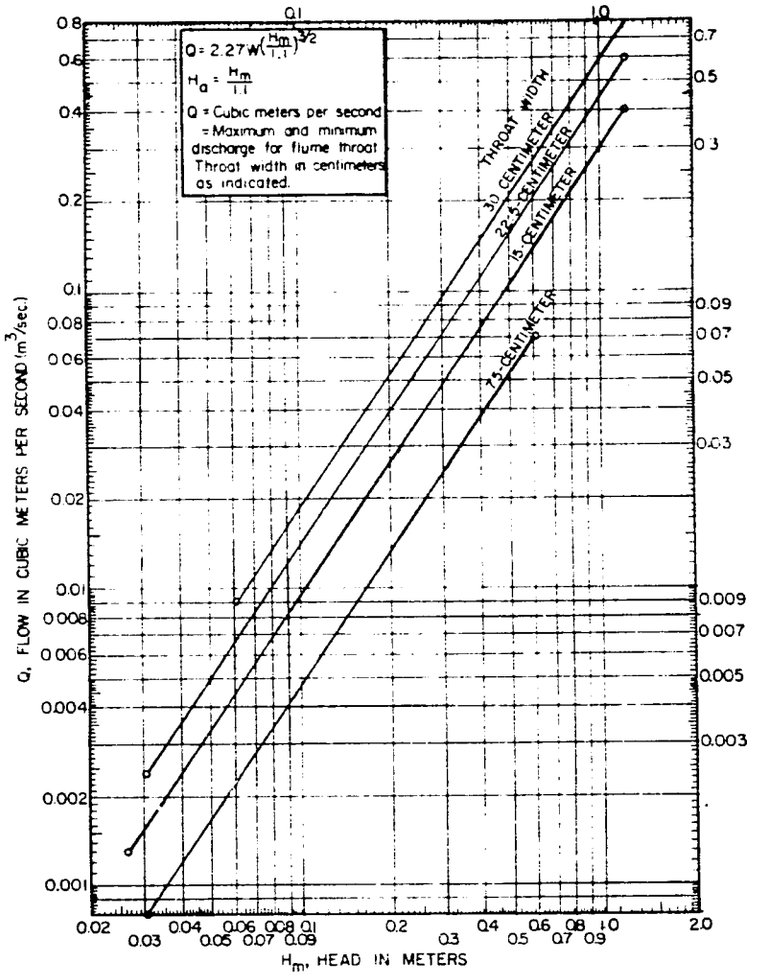

HEAD FLOW RELATIONSHIP FOR PARSHALL FLUMES

FIGURE 2 (b)

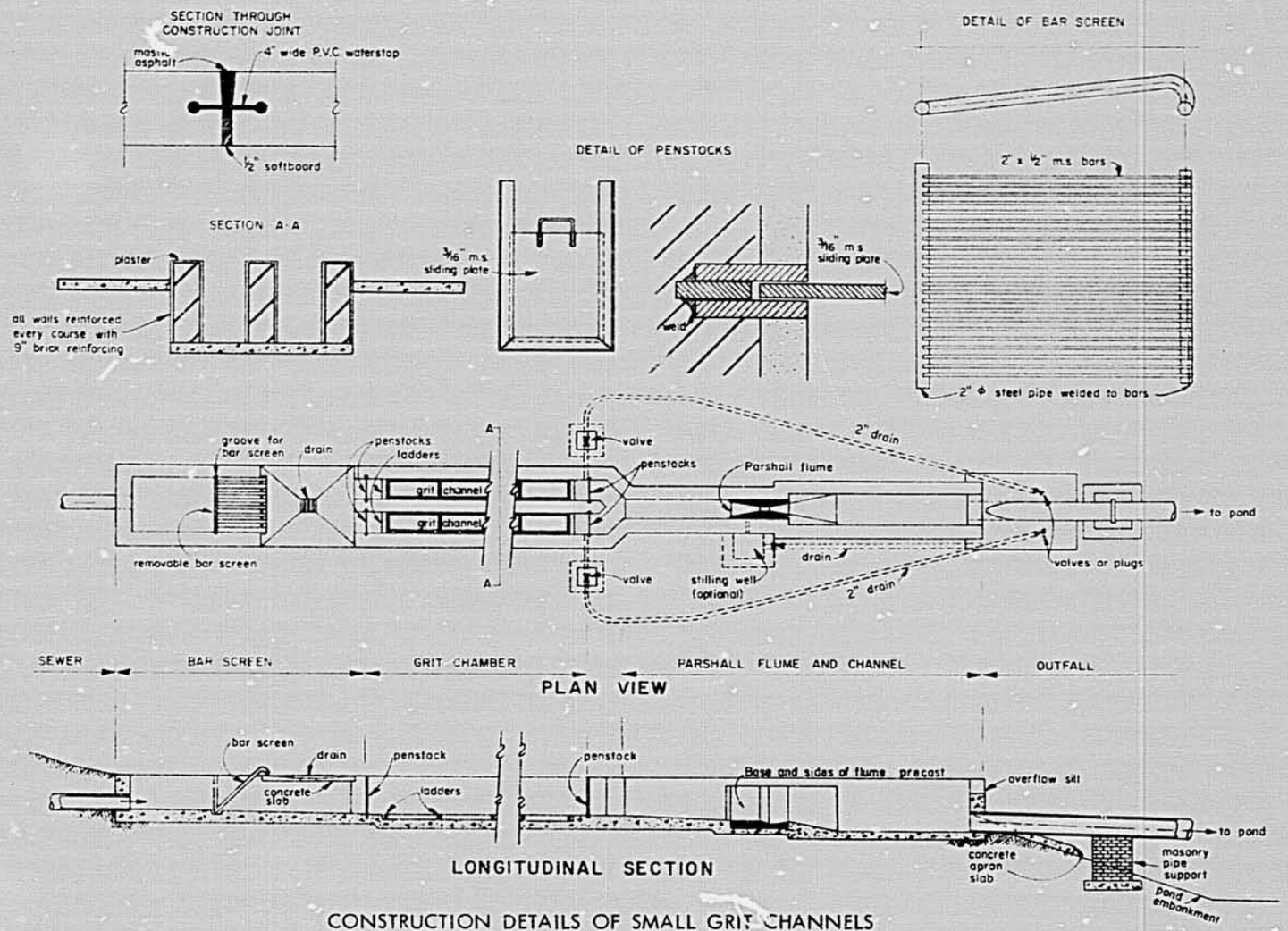

CONSTRUCTION DETAILS OF SMALL GRIT CHANNELS

FIGURE 6

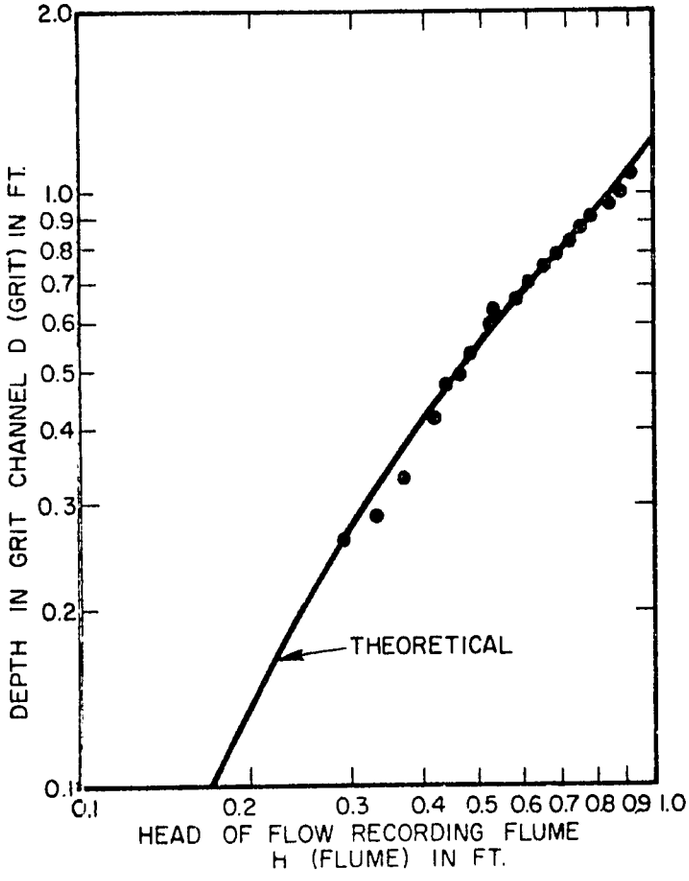

EXPERIMENTAL CHECK ON THE BEHAVIOUR OF A GRIT CHANNEL CONTROLLED BY A PARSHALL FLUME.
FIGURE 7