AGENCY FOR INTERNATIONAL DEVELOPMENT
WASHINGTON, D. C. 20523
BIBLIOGRAPHIC INPUT SHEET

FOR AID USE ONLY
Batch 58

1. SUBJECT CLASSIFICATION

A. PRIMARY
Food production and nutrition — AS00-0000-0000

B. SECONDARY
Human nutrition

2. TITLE AND SUBTITLE
Cassava's role as a food staple; a cross-disciplinary systems analysis of nutrition problems in a cassava dependent culture

3. AUTHOR(S)
April,J.E.; Hersh,G.N.; Rogers,D.J.; Slater,C.C.

4. DOCUMENT DATE	5. NUMBER OF PAGES	6. ARC NUMBER
1974	189p.	ARC

7. REFERENCE ORGANIZATION NAME AND ADDRESS
Colo.

8. SUPPLEMENTARY NOTES *(Sponsoring Organization, Publishers, Availability)*

9. ABSTRACT

Presents the beginning phases of a systems approach to studying food and nutrition in Nigeria. The focus is on a single commodity, cassava, and it is used as a tracing mechanism for describing the structure of the food and nutrition system in southern Nigeria. Food production in southern Nigeria can barely keep pace with demand. Per capita income is not increasing fast enough to allow all segments of the population to enjoy complete nutritional satisfaction. There is a need for intervention programs which yield high nutritional payoffs in relation to their costs. The report describes critical characteristics within the system that are important to understanding how the system operates. It develops recommendations concerning preliminary interventions which change or accelerate the ongoing processes within the system. It lays a foundation for drafting policy decisions which may assist a broader nutritional planning program. This diagnostic project is an effort to show specialists in many fields the value of examining nutrition problems from a systems perspective and to illustrate the value of looking at the impact of any intervention on the entire system.

10. CONTROL NUMBER
PN-AAD-711

11. PRICE OF DOCUMENT

12. DESCRIPTORS
Balancing
Cassava
Diets
Nutritive value
Systems analysis

13. PROJECT NUMBER

14. CONTRACT NUMBER
AID/CM/ta-C-73-44 GTS

15. TYPE OF DOCUMENT

AID 590-1 (4-74)

PN-AAD-711
AD/CM/TA-C-73-44 GTS

CASSAVA'S ROLE AS A FOOD STAPLE

A Cross Disciplinary
Systems Analysis
of Nutrition Problems
in a
Cassava Dependent Culture

by

Jay E. April
Gilbert N. Hersh
David J. Rogers
Charles C. Slater

UNIVERSITY OF COLORADO
Boulder, Colorado

September 1974

Prepared For

Office of Nutrition
Bureau for Technical Assistance
Agency for International Development

AID/CM/TA-C-73-44 GTS

PRELIMINARY REPORT - NOT FOR PUBLICATION

TABLE OF CONTENTS

	Page
INTRODUCTION	
CHAPTER I - SUMMARY OF FINDINGS AND RECOMMENDATIONS	
Findings	
Concerning Cassava Dependency	2
Non-Cassava Based Food Products	7
Soups and their Ingredients	7
Maize and Meat Products	10
Analysis of Findings	12
Intervention Options	15
Cassava Based	16
Non-Cassava Based	17
Intervention Project Development	18
CHAPTER II - INTERVENTION ANALYSIS AND PROGRAMMING FOR SOLVING THE SPECIAL PROBLEMS OF A CASSAVA DEPENDENT CULTURE	
Aspects of Cassava	1
Conditions to Consider in Improving the Level of Living	2
Intervention from a Systems View	4
CHAPTER III - OVERVIEW OF A CASSAVA DEPENDENT CULTURE	
Nigerian Nutrition and Food Supply	2
Food Intakes and Distribution within the Family	11
Economic Factors Influencing Food Acquisitions	15
Economic Nutritional Values of Cassava and Cassava Related Foods	18
Marketing Cassava Products and Related Foods	22
Processing Cassava	30
Farm Practices and Production of Cassava	33
Non-Cassava Based Food Products	39
Yams	42
Cocoyams	45
Banana and Plantains	47
Maize and Rice	48
Grain Legumes	54
Oil Palms	57
Melon Seeds	59
Cotton Seeds	61
Green Leafy Vegetables	61
Fruits, Berries, and Bulbs	62
Animal Products	63

TABLE OF CONTENTS (Continued)

CHAPTER IV - SPECIAL CASE OF A SYSTEMS APPROACH/ NUTRIENT CONVERSION AND TRANSFER ANALYSIS METHODS

Systems Concept -- Nutrient Conversion and Transfer Methods 1

Building the Descriptive Flow Model in a Cassava Dependent Culture 5

CHAPTER V - APPLICATION OF THE ANALYSIS ON A COMMUNITY LEVEL -- A SYSTEMS EXPLORATION

Introduction 1

Narrative "Walk Through" 2

The Consumer 3

The Retailer 8

The Wholesaler 12

The Processor 13

The Producer 15

Systems Analysis 18

Preliminary Analysis of Cassava Related Foods 39

CHAPTER VI - TOWARD A COMPLETE NUTRITION POLICY

INTRODUCTION

The nutritional goals of developing nations are beginning to emerge from a somewhat secondary status to the forefront of national policy objectives. Seen from a similar perspective as that applied to industrial and agricultural programs, nutritional programs can indeed yield results leading to economic development and national advancement. By meeting the nutritional requirements of the population, a large proportion of early deaths and illnesses can be reduced so that the full potential of a strong and healthy work force contributes to the constructive growth of the country. But, while nutritional goals are relatively straight forward in statement, their achievement is difficult because of the complexities of food and nutrition systems.

To unravel these complexities, it is suggested that a systems approach be employed. Often, when very apparent problems related to nutrition are attacked, uncoordinated and sometimes arbitrary solutions are proposed and followed. While these may be necessary to resolve a traumatic occurrence such as mass starvation due to a drought, the more subtle type of problem, chronic in nature, such as malnutrition, continues. This latter type is not effectively handled by ad hoc interventions; further, traditional solutions are usually so costly as to hardly make their benefits worth the price. Let us see how a systems approach performs otherwise.

In reference to a particular system such as food and nutrition, there are numerous intuitive interventions. Some deal with agricultural improvements to increase and sustain an increased level of food production, others with raising per capita income so that more food can be purchased. Still others attempt to increase the quality of the food or lower food prices by reducing waste and spoilage. It is absurd to deny that some intervention strategies leading to these types of objectives have worked. But to state that they have been the best, in terms of highest payoff for the least cost, is equally unacceptable. It is toward this measure, maximum returns for the minimum input, that systems analysis is perhaps most useful.

To reach the types of policies that are measured on this basis, a systems approach would entail several interrelated phases. Figure 1 illustrates in a general manner an outline for pursuing such an integrated procedure. The first phase accomplishes the task of building an operational descriptive flow model by identifying processes on the disaggregated level of the system. During this phase it is also possible to investigate several intervention points and propose further research and experimental programs that can be introduced to influence the system. By observing the decision points, it is also possible to tie into the second phase -- that of constructing a hierarchical model. This model develops and refines the levels of organization within the system. It further serves to ascertain the necessary

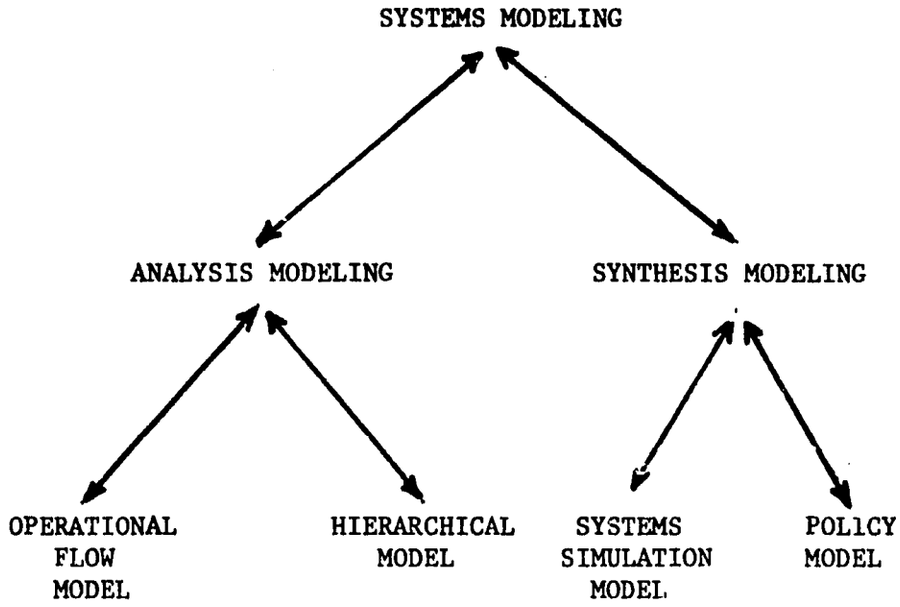

FIGURE 1.

SYSTEMS APPROACH TO COMPREHENSIVE PLANNING

decision criteria within the system. In the next phase a systems simulation model is built. It is based upon the information gathered from the research and experiments of the two previous models. With this model, planners are able to test policy options by exploring the various strategies for accomplishing this policy and test alternative intervention programs prior to adoption. For this phase a systems simulation model is suggested since it allows manipulations to be made anywhere in the model of the system and can measure the results of the manipulations in terms of decision evaluation criteria. Finally, a policy model is developed which can monitor the resulting programs through feedback mechanisms that measure their performance.

This report documents the results of a study that deals with the beginning phases of a systems approach such as the one just described. The project focuses upon a single commodity, namely cassava (Manihot esculenta Crantz), and uses it as a tracing mechanism for describing the structure of the food/nutrition system of Southern Nigeria.

In Southern Nigeria, food production is barely keeping pace with the demands of a growing population. Although per capita income is growing, it is not increasing fast enough to allow all segments of the population to enjoy complete nutritional satisfaction. As food prices rise due to in-country and international pressures, it is becoming more and more difficult to meet consumer demands through existing practices. These indicators reinforce

the need for modification of national policy that proceeds with intervention programs yielding high nutritional payoffs in relation to their costs. The current and future situation in food/nutrition demands that thesecriteria be adhered to.

By applying a special case systems method that is called nutrient conversion and transfer analysis, we were able to describe the food/nutrition system by accomplishing several tasks. First, we were able to describe critical characteristics within the system that are important for gaining an understanding of how the system operates. Second, we were able to develop recommendations concerning preliminary interventions, both research and experimentally oriented, which either change or accelerate the ongoing processes within the system. Third, we were able to form a foundation for drafting policy decisions that will eventually assist a broader nutritional planning program in order to meet the dynamic and interdependent requirements of Nigeria's population needs.

To describe the methods applied to the cassava dependent culture in Southern Nigeria, this report is organized in the following chapter format:

I Summary of Findings and Recommendations

II Intervention Analysis and Programming for Solving the Special Problems of a Cassava Dependent Culture

III Overview of a Cassava Dependent Culture

IV Special Case of a Systems Approach/Nutrient Conversion and Transfer Analysis Methods

V Application of the Analysis on a Community Level -- A Systems Exploration

VI Toward a Complete Nutrition Policy

This study has allowed the investigation of cassava-related issues that are critical in nutritional concerns. It achieves one level of development of the tools useful in reaching the nutritional goals through policy options. To achieve these goals on a national scale, one activity that could make significant contributions would be to continue on the course suggested in this study and ultimately adopt a set of programs that will have high probability of bringing about cost effective solutions to nutrition problems in a dynamic environment. In order to do this, more work needs to be done. There are more questions to be answered and there are policy assumptions to be tested. Further research will help provide answers to the questions; more experiments will enable policy makers to probe the real environment for feedback in evaluating policy options. This study provides direction for this type of effort.

CHAPTER I

SUMMARY OF FINDINGS AND RECOMMENDATIONS

Early in the investigation it became evident that there is no concise central problem that one can point to in the cassava dependent environment of Southern Nigeria. Rather, there are several interrelated problems within the entire food/nutrition system for which proposed solutions deal with the single commodity cassava, yet overlap into consideration of other crops. Further, due to the broad nature of the problem as seen from a systems perspective, the types of solutions are interactive and transcend any artificial limits imposed by such categorization as agriculture or nutrition. Thus, for the purpose of establishing a national cassava policy and seeking nutritional goals we believe it is necessary to introduce comprehensive planning that treats not only cassava and associated nutritional agricultural production goals but also those goals of cassava related crops as well as the varied objectives of the critical decision makers within the country.

The first part of this chapter highlights certain sets of observations made during the study. The second part places these observations into a framework providing an analysis of intervention points where efforts to improve the nutritional well being of cassava dependent people might be applied. Together, the two

parts are a summary of the results that are discussed in the following chapters. This diagnostic project is perhaps more than anything else an effort to make evident to specialists in many fields the value of examining the problems from a systems perspective and the value of looking at the impact of any intervention on the entire system.

Findings

Concerning Cassava Dependency:

- Even the poorest families both in the rural and urban areas do not eat cassava products alone. It is usually taken with other foods.

- Cassava is traditionally viewed as an "energy food" and it is consumed with a soup. This "soup" is seen to be essential. For the hard working personnel cassava is viewed as providing the greatest "strength" for hard work and the cassava paste/flour (akpu/lafun) and meal (gari) products are seen as those which "stick to a man's ribs." The cassava meal is additionally seen to be for the traveler or the person who must carry his preparation with him and who is in a hurry to prepare and eat his food.

➤➤➤➤ Depending on income and area, cassava may not be eaten at every meal but there is a cassava preparation for every meal. Gari can be eaten cool with water and sugar for a drink in the dry season; it can be heated with boiling water and pounded, etc. There is little concern among the people and even among those knowledgeable about cassava concerning concentrations of toxic ingredients.

➤➤➤➤ Cassava is highly differentiable--and following from the actual pathways that led to the current cassava products list--it can continue to be differentiable. This means that new cassava products are likely to be integrated into the system if they satisfy certain basic needs. In the urban area this is that it be easy to store and easy to use and require little extra preparation time. In the rural area, among the hard working personnel, it must be of heavy consistency. The taste differences are subtle but there appears to be no study concerning the acceptance of a product with a taste change. It is likely that a differentiated product might be accepted with a taste change. In the urban areas, it also appears that people are given to health nutrition additives or foods that contain them if there is the income for these products and if there is no violation of the range of tastes.

➛➛➛➛ Too little is known about the actual contents of certain of the fermented cassava products other than gari. Little has been done to investigate the lafun or the akpu products which are very important in the rural areas of both the East and the West. The fermentation process is such that the supernate can be preserved. It is quite a biomass. Some samples of the supernate brought back for analysis to the University of Colorado in 1971 indicate that the protein content of this biomass is exceptionally high and the amino acid profile is excellent. There was no evidence of toxic ingredients. (This was not, however, a very comprehensive analysis. Only a preliminary investigation was done with no rat-feeding or other similar means of detection of toxicity.)

➛➛➛➛ Cassava products are not very income or price elastic. As income of a family increases they are not likely over a large income range to shift away from cassava products to any great extent. There will be substitutions toward yams which are preferred but not as a substitute for the major "energy-strength" food source. The fact remains that people like cassava products, and the cassava products have a differential advantage over other products that are in traditional

use or which are being introduced, like bread and rice. What will happen in the very long run is not clear, but it is probable that cassava will remain a favorite product.

➛➛➛➛ Cassava is also not very price elastic because it is generally the least expensive starch food available. It is probably for this reason as well as its relative ease of growth, the relative lack of capital requirements for its cultivation, and its capacity to produce some yield even on the most marginal lands, that we have witnessed the trend to plant it more and more. The farmer planting cassava in increasing quantities gives rise to the fact that the urban (and even the rural) demand is exceptional and growing. To meet this basic product demand the farmer is even shifting from traditional cultural practices -- he is not only planting cassava as the last rotation, but may be planting it in an early rotation. While he is still intercropping it with such crops as maize and beans, he is gradually reducing fallow time with cassava cuttings.

➛➛➛➛ Even though the production of cassava at the initial conversion, the farm, does not require much labor, nor much capital, nor seed expenses (since seed stocks for the germplasm material are the cuttings), nor fertilizer, nor little in the

way of cultivation and generally little care, the processing of cassava is very difficult and very time consuming and labor intensive. Although simple, the capital equipment needed in the preparation of cassava products is among the most complex many households will have. It is this intensity of effort needed to convert the root into an edible product and the exceptional demand in the rural areas combined with the very low opportunity cost facing the farm wife (and the fact that the equipment she needs to process this food for the home is the same as she needs for commercial purposes) that the cassava cottage industry is as extensive as it is. It is interesting to note that even in the remote villages in the East Central the one basic piece of mechanized equipment is the cassava grinder which is gasoline powered and portable. These observations and the fact that the farmer has an almost immediate market for his product, to his wife or his processing neighbor, makes this cottage industry as strong as it is.

→→→→ There is direct evidence (formal and informal requests) from certain village groups which have shared capital for the preparation of cassava products for assistance in improving their capital structure and even possibly their conversion and transfer processes.

Non-Cassava Based Food Products:

The major findings for some of the more important non-cassava based food products (soups and their ingredients, maize products, and bean products) are given below.

Soups and their Ingredients

➛➛➛➛ The most important single factor is that there is virtually no good information on what soups contain (or in the parlance of the method, the nutrient make-up of the last nutrient conversion step is not known for the output product). There is some information available concerning certain values of the raw material input which appears to be accurate, but the resultant combination is untested.[1]

➛➛➛➛ There are three basic sources of protein in the soups:[2]

(1) Various seeds, the most important of which is egusi (the seeds of the "watermelon" Citrullus vulgaris Schrad.); the seeds (cotyledons) of the mango; and the cotton seed (after processing it seems as if the gossypol problem is minimized). Egusi is high in good quality oil and protein. Oyenuga reports 21% digestible protein before processing as well as vitamins A and D. Little attention has been paid to this although it is possible that as much as 2 grams of protein/day/person in southern Nigeria can be attributed to this single

food.

(2) Various vegetation leaves, such as the fluted pumpkin leaf (Telfairia occidentalis Hook.), the water leaf (Talinum triangulare Willd.) and the bitter leaf (Vernonia amvgdilala). The latter is high in crude protein. Little is known about digestible protein and amino acid profile after preparation. Okra or "lady's Finger" (Hibiscus esculentus L.) is another vegetable which forms the basis for a set of soups. The okra is used either green or dried. It may have as much as 11-14% true protein.[3] Okra is usually the product of home compound gardens except in the most densely populated cities. The product can be found in the market mostly in the dried form.

(3) Animal products used in soups are divided into groups: terrestrial and aquatic. Terrestrial products available for inclusion in soups are relatively expensive and limited data suggests that the consumers react to the prices so that quantities of livestock products in the soups (or stews) of the lower income groups are low. The livestock prices are high due to numerous reasons including inefficiencies in the traditional methods of raising cattle, disease, poor quality of feed and water, and the defects in the market processes. The

distribution of consumption of these livestock products is not uniform, however. Aquatic products (purchased in the markets) used in soups include dried/smoked river fish, dried crawfish of various sizes, snails and periwinkles. The fish sellers indicate that they buy from the same wholesalers and have been doing so for years. The fish are brought by truck from the Niger River and its tributaries. The price has been somewhat stable but it is now increasing. There has also been an increase in demand even at somewhat higher prices and there has been more fish sold. This is another area which has not been analysed well. What is the value of the various aquatic products, what is the exact processing techniques, how can these be improved -- even the costs of the fish catch are unclear -- and yet this appears to be a major source of protein in the cassava dependent areas. Less fish is used in the rural areas but there are fish sellers in the rural assembly markets and fish is purchased. One informant tells us that the amount of fish used is increasing. This may be because of stress on land-produced sources of nutrients. The effect on the fish population is unclear and the research being done in the area is transparent. In this study the aquatic products were not analysed for nutrient content and unfortunately

there was not time to examine the entire series of nutrient conversion/nutrient transfer steps involved with these products.

➢➢➢➢ It is clear that the soup as a whole is income inelastic--there will be a soup. The various ingredients in the soup both in the constituency and the amounts of the ingredients are highly income elastic and probably price elastic. There is a clear addition scale to these soups depending on the money available to spend on them and the relative prices of the products. A basic soup will contain water, palm oil, salt, peppers and one or more of the leaves. Added will be variable amounts of egusi, okra or fish depending on the type of soup. There are specific recipes but it also appears that the soups are highly differentiable products. Intervention into the soups is an important point of study for most of the family from the age 4 and up and, especially for nursing mothers, and pregnant women.

Maize and Bean Products

➢➢➢➢ The information on the input nutrients at the farm is available, but questionable, and there is little information on the final consumed products and for the output at each intermediate conversion stage. Both maize and beans are basic products, supplementary or complimentary in the family's diets,

and are not substitutes for cassava.

>>>> Maize based products are produced and used throughout the south, basically as a food for children. Pap (ogi) is made into the product whose Yoruba name is eko tutu. Again we have not found good nutrient conversion output product analysis for the maize based products although they are used at most income levels as a child's food and for sick people -- although there is some indication that a family may take it at such times as in the evening as a replacement for cassava products. It has also been noted that there is some differentiation as to the rural and urban areas in that the farm children are allowed to eat ear corn whenever they want and whenever it is available. The process for making pap into eko tutu is the last nutrient conversion step prior to being eaten and is often done in the home. In the urban areas, however, vendors make and sell eko tutu in the market. It appears that the product is also one that can be differentiated. (There has been an indication by USDA that there may be a fortification project with this substance. It is very important to consider the nutrient conversion process and the product values before this is undertaken and to be sure that all of the nutrient conversion processes are understood.)

→→→→ Bean products (particularly cowpea products) are supplementary. There are two basic forms: a bean cake type (moinmoin) and a fried bean ball (akara). Both are prepared at home and in the markets. Both appear to have some differentiable characteristics. It is important to note that at this time the bean products are considered to be supplementary to other foods and may be taken in the morning or in the evening but usually not as main meals.

Analysis of Findings

The most critical findings are:

(1) The set of cassava products are relatively income inelastic for even large income changes. This means that cassava is not as 'inferior' a crop as would be expected.

(2) Except in the most dire circumstances cassava products are not eaten alone. There is a complex pattern of food product complements and supplements which are eaten. Within this set there is allowance for family work cycles, food product periodicity and differentiation in foods prepared for persons of different age and health conditions. (Cassava products are not given to the very young in any form.)

(3) The basic complements are the "soups" which are many in preparation and some of which are ingenius. These soups as a whole are also income inelastic -- some sort of soup is used every day in almost every family regardless of income. The ingredients used in the soups, however, are extremely income and price elastic. The basics are the vegetables, leaves and seeds; the luxury items are fish and meat (sometimes). The amounts used vary according to income (over a long range) and fluctuate with price. Also, there has been no competent and recent analysis of the digestible biochemical values of these soups.

(4) There are changes within the system which take great advantage of the differentiability of cassava products and soup products and the people are very fast to pick up on these. There is considerable desire and ability to innovate.

(5) The communities visited in both the rural and urban areas are interested in innovations that will assist them, basically in increasing their income but increasing their nutritional well being as well. For example in the rural areas the people were very much concerned with the improvement of the diets of their children, their pregnant women and nursing mothers.

(6) Almost all of the state institutions (Western and East Central State) were interested in cooperation in intervention programs. These institutions (especially the Ministries of Agriculture and the Market Control Authority) appeared to be competent and had personnel who were highly respected in their respective communities. There are specialized institutions that have engineering and mechanical capacities that are very interested in the technical problems of equipment production for rural intervention, but have little opportunity to coordinate plans. These groups would be willing to work extensively with external intervention programmers.

(7) Financing (and some capital equipment and some supplies) poses a major roadblock to intervention programs but the amounts needed in each case are relatively small and for the most part consist of demand for credit and not necessarily grant funding.

(8) There are large numbers of highly competent and energetic personnel who could be well utilized in intervention programs on a local and national level.

(9) Evidence exists that there is an increase in plant disease, insect infestation, and animal destruction with regard to the crop itself. The narrow genetic base of

the cultivars gives more opportunity for adverse effects on production per plant. It is suggested that new genetic input from cultivars and wild species from the new world semi-arid regions will be needed for further planting in the northern regions of Nigeria.

Intervention Options

Our recommendations have been summarized into a set of intervention options. Each intervention program should include the design of a benefit/cost analysis and the funds to carry it out. To be able to understand the system, host country personnel at all project levels must be allowed to help plan, do and criticize the systems analysis and some of the same people should be involved in planning and executing subsequent intervention programs. Some of these people should lack a 'western' education.

Interdisciplinary and coordinated intervention programs should be initiated into the cassava dependent rural and urban areas of southern Nigeria to improve the nutritional well being of the area's population while minimizing counter-productive changes within the system.

This should be done by following the internal trends demonstrated by the system and by taking full advantage of:

(a) the differentiability and fast acceptance of cassava food products and complementary foods, especially the 'soups';

(b) the tendency to processing specialization within rural

communities;

(c) the tendency of the urban and rural consumer to seek labor saving products, including food products;

(d) the understanding of the processors themselves of the limitations which are halting further specialization. (Such limitation being equipment availability, technological changes, financing, organizational capacity or government restrictions.)

(e) interest among community people to partake in these intervention experiments and to supply personnel for training who can "institutionalize" the intervention and even spread this type of innovation.

Specifically, a strategy should be followed that:

(a) Plans and executes decentralized intervention at the community level -- probably for the most part in the rural areas for production; but,

(b) that the rural aspects of the program be directly tied to centralized urban areas for the purpose of effective product distribution and information exchange.

(c) Plans and executes several coordinated interventions at the same time in different geographical areas based on various cassava products and cassava complements, these to include:

<u>Cassava based</u>

-- changes in rural (GARI) cassava meal production functions and related product distribution

-- changes in rural (and suburban) cassava AKPU or AMALA LAFUN production functions and related product distribution (this is an important product that has not had as much attention paid it as GARI).

-- the production of and the use of cassava fermentation bi-products (either dried extracts) for use as fortificants for humans or livestock.

Non-cassava based

-- changes in the rural production functions and attendant changes in the distribution techniques for:

-egusi/okra/specific leaves all of which form the basis of the 'soup' which is a specific complement of cassava. (For most part the interventions here are of an initial nutrient conversion nature--crop production--but there are some other aspects.)

-aquatic products -- production and processing (fish, snails, crawfish).

(d) that for all of the above all levels of nutrient conversion steps be examined--not only the first step of crop production. It is clear, however, that more and better cassava is needed. This may also be true of the other products. The term 'better' must be determined for each consumer based product. For cassava it means the following:

--higher yields from any land base

--higher yields not based on extensive imported fertilizer application

--lower costs of production not solely based on fuel dependent mechanization

--germplasm available to produce various characteristics for nutrient improvement, agronomic adaptability or plant breeding requirements, etc. which can be chosen by the farmer depending on his market.

Intervention Project Development

If the strategy suggested above is basically followed then the following phased specific steps should be taken:

(1) The work on the descriptive operational flow model be continued and expanded to include aspects of cassava dependency in the northern areas of Nigeria, especially in the Sokoto, Kano and Maiduguri areas. It is important to look for systems trends that would indicate increased dependence on cassava in these areas and the reason for these trends.

(2) The descriptive operational flow model should be expanded to include the non-human consumer use of cassava products, especially cassava products going to the internal markets for livestock and industrial uses and the export markets. The flows of material should be

examined for the probable effect on the food/nutrition system.

(3) Detailed biochemical evaluations of various foods and products consumed and various intermediate steps in food production should be conducted. Hopefully these analyses could be done in conjunction with IITA.

(4) Where possible, plans should be made to do this work in conjunction with the Universities of Ibadan and Nigeria/Nsukka and Federal Agriculture and Research Training Station at Umadike and IITA.

(5) Using the current descriptive model as a base, a working conference would be held including personnel from Nigeria, USAID, IITA and the U.S. The conference would have two objectives: the first to criticize and correct this study; and second, to develop specific and detailed plans for the set of coordinated interventions, including details on the protocols for agency coordination and assistance (to include special training or orientation of participant members). Following the conference, the recommended plans should be specifically programmed and budgeted. Should interested parties as well as funds be found, the projects should be executed.

(6) The planning and then collection of the wild and cultivated Manihot species should be done.[4] An impromptu set of conferences (similar to the one described above) were held among several of the participants[5] of the Root and Tuber Conference held at IITA in December, 1973. The result was an accord that the wild species of Manihot should be collected. This is based on the implicit assumption that there is a need for new cassava cultivars and that these could be developed through extensive breeding programs. The germplasm base of existing cultivars is too limiting and the Manihot species should be systematically collected and evaluated.

There is a request from some of the breeders[6] for assistance in developing the specific breeding programs for the production of cultivars which would be of use in various intervention programs. The planning phase would map out the collection program, establish institutional arrangements to assist in collection, multiplication, phytopathology control, evaluation and germplasm maintenance.

(7) The methods used to create the descriptive flow model of cassava dependent food/nutrition systems can be generalized and improved. Generalization would permit

it to be used on other crops or crop/food product combinations and for other geopolitical areas.

(8) The methods would be expanded to include the development of a hierarchical decision model, a systems simulation model, and a policy model which would provide planners and decision makers the opportunity to determine what would happen should various aspects of the system be changed.

Expansion in capacity would also include a generalization of the concept of intervention analysis/programming and the development of techniques to make intervention planning more flexible. (Special attention would be given the critical problems concerning orientation and training of personnel involved in intervention analysis, programming and execution.)

CHAPTER I - NOTES

[1]See V. A. Oyenuga, Nigeria's Foods and Feeding Stuffs, (Ibadan, Nigeria: Ibadan University Press, 1968). This work is based on a much earlier edition and is basically concerned with the values of nutrients for livestock feed. Also see the section under recommendations for IITA's and our joint proposal.

[2]In some cases, beans (cowpeas, locust beans) are also added to soups, but not frequently.

[3]Oyenuga, op. cit., Table 2, p. 14.

[4]David J. Rogers and Henry S. Fleming, "A Monograph of Manihot esculenta with an Explanation of the Taximetrics Methods Used," Economic Botony, 27, 1 (January-March 1973), pp. 1-113. David J. Rogers and S. G. Appan, Manihot Manihotoides, (Euphorbiaceae) Monograph No. 13, Organization for Flora Neotropica (New York: Hatner Press, 1973).

[5]Consulted in the discussion on Breeding Program needs were:
(1) N. A. Nwosu, Federal Agricultural Research and Training Station, Umudike, Umuahia - Ibeku, ECS
(2) D. G. Coursey, Tropical Products Institute
(3) B. N. Okigbo, International Institute of Tropical Agriculture
(4) J. H. Cock, Centro Internacional de Agricultura Tropical
(5) B. L. Nestel, International Development Research Centre
(6) S. Sadik, International Institute of Tropical Agriculture

[6]The breeders include Dr. Ene, Federal Agricultural Research and Training Station, Umudike, East Central State; S. K. Hahn, International Institute of Tropical Agriculture; Dr. Kwano, Centro Internacional de Agricultura Tropical; D. L. Jennings, Scottish Horticultural Research Institute.

CHAPTER II

INTERVENTION ANALYSIS AND PROGRAMMING FOR SOLVING THE SPECIAL PROBLEMS OF A CASSAVA DEPENDENT CULTURE

Aspects of Cassava

Cassava provides staple foods for an estimated 300 million people. For some it provides the primary staple, for others it is one of several calorie sources. There are, however, three aspects of cassava that make it unusual and suggest a somewhat novel approach to improving the level of living of cassava dependent people.

First, cassava is usually not eaten alone. Unlike rice, maize and wheat dependent non-industrial cultures, people who eat cassava often eat a large proportion of other foods to compensate for the protein deficiency of cassava. Wheat, maize and rice all contain about 90 grams of protein per kilo; cassava may contain between 10-20 grams. Thus the heavy dependence on the staple item in diet is more critical in cassava dependent cultures than it may be in some other communities. Mono-culture developments may be useful in other staple culture areas, but in cassava communities a more complex system of foods appears necessary. The essential conclusion is that to examine the nutrition problems of cassava dependent peoples suggests a need to look at the whole food system and the relation of the food system to the whole agriculture system.

Second, cassava is significantly different in the manner in which

inputs are required for production and utilization. Unlike maize, yams, rice, and other tropical staples, cassava needs little land preparation, weeding or care during growing. Labor, fertilizer and pesticides are not high inputs since cassava can grow on some of the least productive soils in tropical areas. Thus one could reach the conclusion that cassava is an extremely low cost cultivar in terms of the cost in land and labor and commercial inputs. This could be somewhat misleading as cassava is time consuming in its preparation for eating. The post harvest activities are quite labor intensive. This work is largely women's work and it is often done in the rural area. Thus cassava is difficult to modernize; in a labor surplus economy, it provides low cost calories.

Third, cassava, unlike most staples, has a toxic property in its raw form that makes processing essential. While quenia, the Alto-plano cereal and even soybeans require washing to remove toxic substances, cassava requires rather complex processing to sublimate the hydrogen cyanide. The long run effects of sustained ingestion of cassava may be harmful, but no conclusive research is available.

Conditions to Consider in Improving the Level of Living

Cassava, due to the aspects mentioned above, is therefore somewhat unusual among staples and these attributes bring about the following conditions which must be considered in attempts to improve the level of living among cassava dependent peoples:

(a) A cassava dependent food/nutrition system is a complex of

social and economic interactions shaped and changed by the very nature of the differentiability and wide acceptance of cassava products. Further, the system involves the relationships of cassava products to other non-cassava foods whether they are supplements, complements or substitutes.

(b) Traditional, single discipline methods appear not to be sufficient to explain this system. A rigorous interdisciplinary systems analytical approach is suggested and ideally it should begin with the patterns of consumer actions backwards through the system. Such an analysis may well be the first step toward the planning, execution and evaluation of more efficient intervention programs.

(c) The planning, execution and evaluation of intervention programs should be interdisciplinary and should coordinate the several agencies working in the same area on related problems.

Such interventions should be based on a clear understanding of internal self-induced trends and changes within the cassava dependent system. It may be dangerous to work from hopeful assumptions adopted from non-cassava based systems (for example: cassava products should and thus can be replaced by 'better' foods).

(d) Interventions can be made in the cassava dependent food system that can improve the nutritional well being of the population; however, these interventions may depend on an understanding of consumer action as well as those of the producer. Changes solely in the traditional production sector may not achieve desired results and in fact may cause changes in the system counter to the specified

objectives of the intervention.

(e) There is an important secondary objective to any intervention program which is often misunderstood or completely neglected: that the intervention program itself is an experimental thrust into the system that will assist in understanding the entire system; especially those interrelationships that may be hidden and distant. (Such as the possible effect on real income or nutritional well being of urban dwellers due to large scale exports of cassava chips.)

Intervention from a Systems View

An initial requirement of this contract was to develop an integrated approach for understanding food/nutrition systems which are cassava dependent. A second requirement was to construct a descriptive model that would assist decision makers/planners to gain knowledge of the nature of the cassava dependent system; and third to indicate points in the system where intervention was most likely to achieve some specified set of objectives and finally to suggest intervention ideas at these points which would have a high potential for success.

It must be pointed out that the critical set of instructions was to develop a method and a descriptive model which could feed information into a variety of intervention analysis programs.

The intuitive concept of intervention analysis is subject to many definitions. Let us explain what this concept means within the framework used here. The concept is based on several assumptions.

(1) There exists a system, in this case one which provides food to a population in a given area;

(2) This system has evolved over many years and to some degree is adaptive to change. The system itself is responsive to changes and has the capacity toward self-innovation as well as the acceptance and inclusion of innovations from external sources.

(3) The system can be studied by process of observational analysis and further can be probed by experiments to determine what will happen if certain innovations are purposely introduced.

(4) The system is amenable to change from external pressures, but will react to these pressures and the resultant reaction might be counter-productive to the specific objectives of an externally induced change.

(5) There may be certain points through which externally induced change can be introduced through which there is a high probability of having the induced change accepted and integrated into the system, with a minimum of counter productive reactions.

(6) Some of these intervention points can be identified and developed.

(7) A method to monitor the programs can be developed on an institutional basis to determine the effects of intervention.

Intervention is not new. In fact, the institutional features of the Green Revolution, that is, the decisions to develop and diffuse technological innovations through international research institutes, are examples of ongoing interventions whose expectations are to improve agricultural production.[1] We have seen, however, that our systems descriptions have yielded areas in addition to agricultural production where the potential exists to reach development goals. Those deeply committed to crop improvements are amongst those who realize that these other areas are important even in achieving objectives specific to production.[2]

Many authors in the field of economics have studied interventions in developing countries through the establishment of investment criteria. Such measures as capital-output ratios,[3] social marginal productivity,[4] and future output per capita,[5] stand out as representative and thoroughly documented categories for allocating resources. Furthermore, the models of balanced and unbalanced growth, as advocated by Nurske and Hirschman respectively, attempt to explain the advantages and disadvantages of sponsoring certain economic ventures relative to others in pursuit of overall national development.[6] More recently, attention has been given to measuring progress through the applications of benefit-cost analysis to various projects.[7]

While the paradigms proposed in this literature diverge in various aspects, there exists a commonality between them which also serves as a building block for our methodology. This is the thread of focusing upon the production function of a particular endeavor

and evaluating its efficacy. From our description of the cassava food system, we see a series of production functions in both the synthesis and the transfer processes. Within the system, sets of these production functions potentially serve to move individuals and organizations toward their respective goals. It is our purpose here to investigate how these functions, where related to cassava and nutrition, should be analyzed so that programs might be initiated to enhance the efficiency of some functions, modify the processes of others, and where judged appropriate, create functions which are not currently in existence.

Two concepts are applied here to make the global term intervention more useful. Intervention can be seen as being intervention in conversions or intervention in transfers. The concept of conversion is merely that of putting things together in a productive manner. Applied to cassava, it concerns the productive merging of land, germ stock, labor, etc. and later the processing which involves heat, fermentation, drying, etc. The concept of transfer concerns the assembly and distribution of cassava and its inputs as well as communication between farm and final consumer.

In developing countries many problem solving interdisciplinary techniques have been applied on the societal level. Where a strong national government is in command of virtually all of the resources, this type of application is inevitable, and, in many cases, desirable. Many of the government administrators have received training abroad in universities where they have learned the fundamentals of these

sophisticated techniques. Consequently, there is common ground between them and technical experts who are in their countries performing studies which seek to assist in development.

From application of our model of the cassava system, there has also emerged the need to apply the interdisciplinary methods on the disaggregated community level. By tracing the pathways of food and nutrient flows, there seem to be many areas in which processes can be added, accelerated, or modified in creating and fulfilling opportunities for small scale operations. Testing and evaluating these projects is a logical extension for the utilization of methods employed by firms in developed areas.

In the case of Nigeria, where cassava dependency exists, there are indications that the potential is strong for planning and implementing local public and private business ventures. Two observations support this contention. First, there is evidence that Nigerian people are receptive to changes that are accompanied by economic gains. Hodder has stated that ". . . they have shown a shrewd sense of economic advantage . . ." and that no evidence exists which shows a lack of desire to make profits from production and exchange.[8] Second, although cassava is the single most important dietary item, the forms in which it is prepared vary greatly. This feature is exploitable in terms of creating new product forms of perhaps higher nutritional value.

By taking advantage of those areas which appear to be receptive to change (including those which are already in progress), interventions

increase their chances of success. Furthermore, they must be planned, implemented, and monitored working within the frame of reference of the local decision makers. There is a wealth of folk wisdom that cannot be discounted in seeking to modify internal processes. In planning, the techniques of marketing research are valuable in identifying such characteristics as consumer preferences, price sensitivity, and the expected responses to product changes. The implementation and monitoring stages of a project are highly dependent upon the information provided by cost accounting techniques and the evaluations of alternative solutions which can be gleaned through the tools of management science.

Almost ironically, interventions performed in this manner take on a larger scope by concentrating on smaller projects. However, if external assistance procedes in this fashion, the whole spectrum of the decision structure within the entire cassava food system can serve as a construction site for new and challenging ventures. From the farm and the household there exists an almost limitless number of opportunities such as food production and processing, storage, packaging, merchandising, and discount retailing whose excitations could lead to more employment, higher incomes, and better nutrition.

In order to meet the goals of interventions, the planners and the decision makers involved must have a systematic and integrated understanding of the system into which they wish to introduce change. It is obvious that it is virtually impossible to understand

all aspects of a system that is obviously very complex. However, by careful analysis the system can be better understood so that interaction within the system of experiments can be identified and evaluated. With better understanding of the system it is possible to find better intervention points and to write better intervention programs. This knowledge is not gained solely by research (systems analysis alone), but must include testing actual projects in the system which are essentially experimental. These must be carefully monitored and modified over time.

CHAPTER II - NOTES

[1]W. W. McPherson and Bruce F. Johnston, "Distinctive Features of Agricultural Development in the Tropics," Agricultural Development and Economic Growth, Edited by Herman M. Southworth and Bruce F. Johnston, pp. 202-4, (Ithaca, N.Y.: Cornell University Press, 1967).

[2]Yujiro Hayami and Vernon W. Ruttan, Agricultural Development, An International Perspective, (Baltimore: The Johns Hopkins Press, 1971), p. 216.

[3]R. F. Harrod, "An Essay in Dynamic Theory," Economic Journal, 49, (March 1939) pp. 14-33.

[4]H. B. Chenery, "The Application of Investment Criteria," Quarterly Journal of Economics, 57, (February 1953) pp. 76-96.

[5]W. Galenson and H. Leibenstein, "Investment Criteria, Productivity, and Economic Development," Quarterly Journal of Economics, (August 1955) pp. 343-370.

[6]Ragnar Nurske, Problems of Capital Formation in Underdeveloped Countries, (New York: Oxford Univ. Press, 1953). Albert O. Hirschman, The Strategy of Economic Development, (New Haven: Yale University Press, Inc., 1958).

[7]Arnold Harberger, "Cost Benefit Analysis and Economic Growth," Economic Weekly, (February 1962).

[8]B. W. Hodder and U. I. Ukwu, Markets in West Africa, (Ibadan: Ibadan University Press, 1969), p. 92.

CHAPTER III

OVERVIEW OF A CASSAVA DEPENDENT CULTURE

Although cassava has been cultivated for thousands of years, the amount of research devoted to it has been minimal. Most of the questions concerning its role as a food crop are unanswered while its production continued to rise. Several interesting features of cassava are: it is subject to some serious diseases both bacterial and viral; though wild varieties number in the hundreds, only a bare handful of varieties and crosses are the basis of all crops; processing varies in efficiency of removal of HCN and protein development; and farm practices varies so widely as to suggest that some farmers must be wrong. For reasons such as these it was important to put together information that could better describe the role of cassava as well as its related food products. The geographical area of Southern Nigeria is an appropriate region in which to document this information. There are large pockets of high population concentrations; per capita income is low; and cassava production is such that Nigeria is one of the world's largest producers.

In this chapter we present an overview of the information describing cassava dependency in Southern Nigeria. The following outline provides the order of presentation:

Nigerian Nutrition and Food Supply

Food Intakes and Distribution within the Family

Economic Factors Influencing Food Acquisitions

Economic Nutritional Values of Cassava and Cassava Related Foods

Marketing Cassava Products and Related Foods

Processing Cassava

Farm Practices and Production of Cassava

Non Cassava Based Food Products

For those familiar with the area, much of what is contained in this chapter will not be new. However, the information does provide a foundation for understanding the make-up of a cassava dependent culture and many of the nutritional problems which they face.

Nigerian Nutrition and Food Supply

Using the population estimates, it is possible to attempt to match nutritional requirements and food supply. It must be noted that our aim is not to specifically detail all the nutrition related problems that are indicated by the data but only to highlight those that are associated with cassava and its related products. Consequently, we have chosen only to elucidate the most important measures as they relate to cassava dependency. A more comprehensive analysis can be found by going to the sources that are cited.

The 1972 population estimates for all of Nigeria vary between 58 million and 70 million people.[1] With a total land area of about

360 thousand square miles, the average number of persons per square mile is between 161 and 194. Table 1 shows the population and population densities by State from 1963 to 1973. Several important characteristics emerge from these estimates. The southern states, where practically all of the cassava is grown, have an average population density of over 450 persons per square mile. In fact, in some of the southern rural areas, such as in the East Central State, estimates reach around 1500 persons per square mile. For those rural locations exhibiting high population densities, it is perhaps more indicative of the pressures exerted on food supply to measure the numbers of persons supported per acre of food crop. Some studies have shown this number to be over 7 persons per acre of food in southern villages.

Overall, Nigeria is mostly self-sufficient for its food intake. Principle food crops are millet and sorghum in the Northern region and cassava, yams, and maize in the South. Additionally, cocoyams, rice, cowpeas, and palm kernals (oil) are food crops of secondary importance as measured by the production quantities. A livestock inventory taken in 1967/1968 showed estimates of 56 million poultry, 23 million goats, 11 million cattle and nearly 8 million sheep.[2] Major food imports are dairy products, wheat, and sugar (the country is expected to become self-sufficient in sugar production in the near future).

In 1970, agriculture was responsible for about 50% of the Gross Domestic Product and employed about 70% of the working population.[3]

TABLE 1

Population and Population Densities by State, 1963-1973

Year	Western		East Central		South-Eastern		Mid-Western		Rivers		Lagos	
	TP	PD	TP	PD	TP	PD	TP	PD	TP	PD	TP	PD
1963	9488	326	7228	639	3623	324	2536	170	1544	220	1444	1045
1973	13610	468	10454	924	5197	466	3637	244	2215	316	2071	1500

*TP = Total Population times 10^3
PD = Population Density

Year	Kwara		Benue Plateau		North-Eastern		North Central		North-Western		Kano	
	TP	PD	TP	PD	TP	PD	TP	PD	TP	PD	TP	PD
1963	2390	84	4009	99	7893	75	4098	151	5733	88	5775	347
1973	3441	120	5751	142	11322	109	5878	217	8224	126	8284	498

Source: Nigerian National Statistics for Census Years 1963 and 1973. State distribution of 1973 population is proportional from the 1963 figures. This distribution should be corrected on a state-wide basis when the data becomes available.

While much of this production was for export, agriculture's share of total exports has been declining as a result of the growth of crude oil exploitation. Further, estimates have shown that with an annual growth rate of approximately 3%, agriculture has been the slowest of all major economic sectors.[4]

It is estimated that of the total land area of 229 million acres in Nigeria, approximately 24% is arable.[5] Of this arable land, slightly over 29 million acres or 53% is currently under cultivation.[6] Most of the cultivated land is worked by small holders, farming roughly between 1 and 5 acres of land with food crops.[7] Table 2 presents a frequency distribution of farming households by size for those engaged solely with food crops. While these figures are for all of Nigeria, data from those states with high cassava production show some variation, with more acres farmed toward the lower end. For example, in 1970/71, 92%, 60% and 63% of the farming households were cultivating under one half of an acre in the East Central State, Mid-Western State and Western State respectively.

The increasing growth rates, estimated at between 2.5 and 4.0 percent annually for the country as a whole and over six percent annually for urban communities, coupled with other observed factors are placing a burden on the food system. For example, rural urban migration is considerable with over sixteen percent of the population currently living in cities.[8] These urban locations, which are food deficit areas, must import food from the rural areas.

TABLE 2

PERCENTAGE AND NUMBER OF FARMING HOUSEHOLDS

BY SIZE, NIGERIA, 1970/1971

FOOD CROPS ONLY

Size of Household Farm (acres)	Percentage of Total Farming Households (percent)	Number of Farming Households (millions)
Under .25	32	8.5
.25 - .49	18	5.0
.50 - .99	19	5.4
1.00 - 2.49	19	5.3
2.50 - 4.99	7	1.9
5.00 - 9.99	2	.6
10.00 or more	-	.05
TOTAL	100%	26.75

Source: Adapted from Rural Economic Survey of Nigeria, RES/3/1972, Federal Office of Statistics, Lagos, Nigeria, pp. 63, 121.

Because a large number of the migrants are young males who would otherwise be farmers a greater stress is placed on these rural areas which not only have to produce more food, but must do so with fewer people.

Additionally, based on 1963 proportions, nearly 42% of the Nigerian population is under 15 years of age. Furthermore, approximately 20% of the population is under the age of 6 years. The large size of these young groups means that no only does a substantial percentage of the population have different and often greater nutritional requirements, but that most are dependent on others for the satisfaction of these requirements.

The Federal Department of Agriculture of Nigeria completed a study which included a list of nutritional requirements on an average basis. Table 3 presents nutrient allowances per day for different ages and sex that were documented in the government report from this study. From these stratified measures, they calculated that the minimum average crude protein and calorie requirements per person were 53.8 grams and 2192 calories respectively.

On the supply side, it was estimated from food balance sheets that there were 58.5 grams of crude protein and 2198 calories available per head per day. Table 4 shows these figures along with data collected by FAO and USDA for past time periods. A casual glance would indicate that, at least on an average basis, the Nigerian population is meeting its nutritional requirements.

TABLE 3

Nutrient Allowances per day Different Ages

Age or Physiological group	Calories per day		Preference Protein G/Kg/Day		Calcium Mg/Day		Iron Mg/Day		Vitamin A potency IU/Day	
	M	F	M	F	M	F	M	F	M	F
0 - 5	1,290	1,290	1.14	1.14	500	500	7	7	3,000	3,000
6 - 9	1,885	1,885	.93	.93	450	450	10	10	3,000	3,000
10 - 14	2,510	2,360	.85	.85	650	650	13	13	3,000	3,000
15 and over	2,960	2,130	.73	.73	500	500	15	15	5,000	5,000
Pregnancy: 2nd and 3rd trimester	-	plus 450	-	plus 6 g.	-	1000	-	20	-	6,000
Lactation	-	plus 1,000	-	plus 15 g.	-	1000	-	20	-	8,000

Age or Physiological group	Thiamine Mg/Day		Niacin Mg/Day		Ascorbic Acid Mg/Day		Riboflavine Mg/Day	
	M	F	M	F	M	F	M	F
0 - 5	.65	.65	6.45	6.54	15	15	0.77	0.77
6 - 9	.94	.94	9.43	9.43	20	20	1.13	1.13
10 - 14	1.26	1.18	12.55	11.80	25	25	1.51	1.42
15 and over	1.48	1.07	14.80	10.65	30	30	1.78	1.29
Pregnancy: 2nd and 3rd trimester	-	1.27	-	13.65	-	40	-	1.59
Lactation	-	1.57	-	17.65	-	50	-	1.89

Source: S. O. Olayide, et al., A Quantitative Analysis of Food Requirements, Supplies, and Demands in Nigeria 1968-1985, (Lagos, Nigeria: The Federal Department of Agriculture, 1972), p. 10

TABLE 4

Crude Protein and Calories

Source	Requirements Protein Gms/Day	Requirements Calories Calories/day	Availability Protein Gms/Day	Availability Calories Calories/day
Nigeria, Federal Department of Agriculture 1968/1969	53.8	2192	58.5	2198
USDA 1959-1960	--	--	51.3	2450
FAO 1963-1964	--	--	50.9	2134

Source: A Quantitative Analysis of Food Requirements, Supplies, and Demands in Nigeria 1968-1985, (Lagos, Nigeria: The Federal Department of Agriculture, 1972), pp. 9-19.

Further probing, however, even into the documented study, tells us otherwise.

Based upon estimates for an average Nigerian, corrected for age, occupation and environmental temperature, the calorie requirements for a man are 2960 calories and for a woman 2130 calories. When the study takes farming, the predominant occupation, into consideration and assumes that 80 percent of the people in the age groups 15 years of age and above are farmers or laborers, the average per capita calorie requirement rises from 2198 calories to 2470 calories. Other studies have shown that an average African farmer needs as much as 3400 calroies on his working days.[9] Furthermore, a waste adjustment factor can be used to multiply any of the above figures.

When protein figures were examined, it was discovered that a net protein utilization value (NPV) of 65 was used. With a diet heavily made up of cassava, however, the study suggests a NPV more on the order between 50 and 60. Using a value of 50, the crude protein requirement jumps to 70 grams. Here again the 1.1 adjustment factor can be added to account for waste.

The study also states that the average bulk of the diet is approximately 1296 grams of food per person per day.[10] It would be highly unlikely that young children could consume this much food in order to satisfy their requirements. Consequently, youngsters are falling short of the daily nutrients required during the important growing years.

Geographical differences also contribute to discrepencies in matching supply and demand. In those states that are cassava dependent (close to 50 percent of calories ingested are provided by cassava products), average daily intakes of proteins and calories are approximately 56 grams and 2750 calories respectively. Adjusting these for waste, reduces the figures to 51.2 grams of protein and 2500 calories. Assuming that average requirements in these tropical farming areas are 65 grams of crude protein and 2500 calories per person per day, even on an average basis, these supplies fall short of protein allowances and are marginal for calories when considering hard working farmers, pregnant and lactating mothers, and young children consuming traditional diets.

This probing leads us to believe that nutritional requirements are not being satisfied on an overall country-wide basis. Coupled with seasonal variations, numerous marginal occupations, and income differences, it is highly probable that a significant proportion of the population is not meeting its nutritional requirements.

Food Intakes and Distribution within the Family

The traditional diets of the Nigerian population are quite variable with such factors as geography, seasonality and income being very important. Concentrating on the Southern areas, we have gained information indicating that some patterns do exist in dietary practices. While most of the nutritional diet surveys that we used as secondary sources were several years old, our

field observations seemed to confirm that there were relatively few changes. We have noted, however, where shifts in consumption were believed to be significant.

Southern village surveys show that food intake is often over 2000 grams per person per day. The major bulk portions of the diet consist of starchy foods. Table 5 shows that even on the gross values taken from the food balance sheets, starchy foods compose from 69% to nearly 80% of the bulk diets in the three Southern states illustrated. Of these starchy foods, cassava is eaten in the largest proportions making up between 41.5% and 53% of the bulk diets and providing up to 45% of the daily per capita calorie intake.

These gross figures compare well to others obtained in dietary surveys in rural villages in the East Central State and the Western State of Nigeria. In Uboma, a small village in the East Central State, cassava accounted for 38.[illegible]% of the bulk food intake per person per day which corresponded to 42.5% of the daily calorie consumption.[11] In Owu, a rural district in the Western State, 59% of the bulk daily diet consisted of cassava.[12] In earlier studies, Jones reported similar proportions based on surveys in rural communities.[13]

While absolute intake measures convey information concerning the importance of cassava in the diet, it is necessary to investigate food distributions within the family. One of the strongest factors contributing to nutrient shortages is probably poor family food distribution. Adult males consume the largest portions of the

TABLE 5

BULK DIET COMPOSITION

	WS %	MWS %	ECS %
Starch Foods: Cassava, yam, cocoyam, plantain TOTAL	79.0	69.0	79.5
Cereals: Maize, millet, sorghum, rice wheat TOTAL	7.0	2.8	1.8
Grain legumes: groundnuts, cowpeas, others TOTAL	1.1	2.0	.9
Oil Seeds and nuts: Melond seeds, other seeds kola nuts, dicanuts, coconuts TOTAL	0.6	0.3	3.3
Vegetables & Fruits: Vegetables, fruits TOTAL	2.6	13.0	3.7
Sugar: Refined, cane stem TOTAL	---	---	---
Animal Products: Meat (beef, goats, sheep, poultry, pigs), bush meat, offals, eggs, milk, cheese TOTAL	2.3	6.6	2.7
Oils & Fats: Palm oil, groundnut oil, butter, others TOTAL	1.4	1.3	1.1
Beverages: Palm wine, beer TOTAL	6.0	4.7	7.0

Source: A Quantitative Analysis . . ., op. cit., pp. 27,28, 36, 37, 48, 49.

prepared meals and eat individually while the rest of the family usually shares the same bowl.

Studies show that childhood is not the most nutritious age period in the lives of Nigerians. Two rural reports by Omololu showed that children under six years of age received between 49% and 83% of required calories and between 59% and 78% of their crude protein allowances. Further, the situation did not improve with age as exemplified in the 6 to 15 age group where the highest percentages of required calories and crude protein met were 80% and 72% respectively.[14]

Generally speaking, children are breast fed upon demand up to the age of two years old. They are weaned on foods consisting of maize, beans, water and where income permits, some processed baby foods. Cassava does not enter the diet much before this age as mothers believe the starchy products are 'too heavy' for their babies. As children are weaned and become more independent, they begin to eat with the family during meal periods. However, the last meal of the day is often served late and young children must be awakened in order to partake; their intake is reduced due to their drowsiness. When mothers work in the markets, children are given money to buy food from vendors whose foods are not standardized for nutritional content. Some taboos still exist such as the belief that children who eat eggs will become thieves. The extent to which these practices are culturally ingrained or detrimental to adequate nutrition has never been measured.

Pregnant and lactating mothers form another group that has been found to be lacking in nutritional satisfaction. Part of the reason is that these females require substantially more nutrients than other women. However, in Omululu's study it was determined that women in these categories received slightly fewer calories and significantly less protein than non-pregnant women or women who were not nursing.[15] Unfortunately, there was no explanation for the differences.

Information is almost completely lacking for the aged. While the population pyramid is very peaked showing a relatively small number of elderly people, their individual nutrition problems are no less difficult. Quite often, old men and women participate extensively in the farming and trading occupations and consequently their diet needs might be similar to those in other adult categories. Unfortunately, it was not possible to find conclusive evidence as to their nutritional status although one study showed that their protein intake was lower and their calorie intake higher than other adults.[16]

Economic Factors Influencing Food Acquisitions

Although most of the population in cassava dependent areas are engaged in agricultural production, they still participate in the market economy of buying foods. In fact, the Uboma study showed that the rural villagers purchased as much as 60% of their calorie intake during the course of a year.[17] In contrast to the urban

areas where most of the people buy nearly all of their food, rural inhabitants usually buy food to supplement their own production. However, in many cases foods are purchased which are not produced sufficiently in the consuming area such as the cereals and beef products.

While income distribution is probably the single most important aspect related to nutritional well being, the data on consumer incomes, food expenditures, and prices of foods are usually the most unreliable. Factors contributing to the unreliability of data include no definitive purpose for collection of specific information items, exclusion of home garden and kitchen foods, under-reporting of incomes, the price variability in barter markets, inability of respondents to keep a consumer diary, and the apprehension that exists toward official surveys. Consequently there are likely to be many qualifications when basing conclusions on this type of data. Further, knowing the incomes of populations and the corresponding expenditures does not provide a sufficient description regarding nutritional satisfaction. This is especially true for low income groups within a population and their expected benefits from higher incomes. As Berg has stated, "For many low income groups, malnutrition cannot automatically be solved by development, for the effects of income growth may not be efficient, quick in coming, or equitably distributed."[18]

In spite of these shortcomings, there is useful information to be gained by examining the consumer incomes of a cassava dependent environment. For example, we have learned that in the lower income

groups in two urban areas of the East Central State, food expenditures account for approximately 50% of total purchases.[19] Of the amount spent on food, almost half is spent on starchy staples.[20] These numbers are somewhat lower than those from other developing countries but they do indicate that sensitivity for food products is important in the consideration of the effects of increased income. In other words, we would expect that the major portion of any additional income would go for buying more food, indicating a lack of satisfaction at least on a bulk basis.

Clearly, consumption patterns in general vary with income. As income rises, families will purchase more food as well as different food. For example, in the urban areas, the indications are that as incomes rise, more meat and beverages will be purchased. Also increasing incomes give rise to buying more of the higher priced processed foods. However, it appears that cassava purchases do not decline at all with more income even though it might be expected that meats and more sophisticated processed foods would be substituted for cassava. In fact, there is an increase in the amount spent on cassava products as incomes rise, although there is a slight shift toward the cassava products that are preferred (fried gari) to others (fermented such as akpu and amala lafun).

Seasonal variations in agricultural production have an influence on consumer incomes and expenditures for food. In the rural areas, during the harvest season (November-January) more food is produced but more food is purchased, partially due to the lower prices of

crops, due to higher incomes, and due to the pressures of the festive season. After this time period, buying decreases as prices begin to rise. Beef prices are an exception to this pattern as they are more sensitive to demand during the harvest season. Consequently, during the festivities of the harvest when beef demand is high, the price of beef is probably at its yearly peak.

Cassava dependency stays practically constant over the year and might even rise during the hungry season, i.e., during the crop growing season. Although cassava's price also rises during this time period, it does not increase as much as other foods. The rural farmer is probably better off than his urban counterpart because he can store more cassava in the ground and harvest it for his own consumption throughout the year as needed. There is evidence though that shows that the urban dweller is using some of the cities' open spaces (similar to vacant lots) as well as remote land to plant cassava for security purposes.

Economic Nutritional Values of Cassava and Cassava Related Foods

Table 6 gives somewhat of a comparative indication of the economic nutritional values of selected foods. Although the nutrient values shown are given prior to preparation, it appears that cassava gari is the cheapest source of energy while the green vegetables and beans are attractive protein sources from an economic basis. It should be noted that cassava products, maize, yam and rice are stable substitutes for each other while beans, okra, green vegetables,

TABLE 6

Economic Nutritional Values of Selected Foods

Food	Retail Market Price, Ibadan March 1973 kobo/1000 gms	Calories calories/ 1000 gms	Protein crude protein % of dry matter
Gari	8.75	3843	1
Fluted pumpkin leaf, water leaf (green vegetables)	22.7	---	21
Melon Seed	68	6861	33
Okra	---	3210	16
Beans (cowpeas)	17.7	---	13
Maize	10.1	4096	3
Rice	22	3971	10
Yams	11.5	3811	6

Sources: Calculated from Retail Prices and Consumer Price Indices for Selected Urban Centers for March 1973, Federal Office of Statistics, (Lagos, Nigeria: Federal Office of Statistics, 1973) and V. A. Oyenuga, Nigeria's Foods and Feeding Stuffs, (Ibadan, Nigeria: Ibadan University Press, 1968).

and melon seeds are compliments to each of the staples.

It is possible to roughly measure the economic/nutrition crude protein value of foods that are utilized quite frequently in the stews that accompany the cassava products. Products that provide animal protein such as beef and fish are very expensive on the basis of money spent per gram of protein. Prices in three of the large cities of the Western, Midwestern and East Central State (Ibadan, Benin City, and Enugu respectively) averaged 41 kobo per pound of boneless beef and 75 per pound of dried fish in February 1973. (100 kobo ≅ $1.50).[21] Further these prices represent as much as a 55% increase (for dried fish in Benin City) over those in the previous year. Previously, people could substitute wild game for purchased meats and fish. Reports have shown that meat from wild animals used to be one of the chief sources of animal protein.[22] Unfortunately, game is very scarce today because of the high rural population densities. Other well known cheaper protein sources such as the grain legumes are eaten but not as extensively as the animal products.

Although it has not been verified by reliable statistical data, indications lead us to conclude that cassava is the highest calorie providing food the for money spent given the assumption of low opportunity cost at the present level of development. Figure 1 shows the retail price per calorie ratios of 4 selected food crops between 1970 and 1972 in 5 of the 6 southern states. Even on this gross basis, maize cost 28% more per calorie purchased and rice 166%

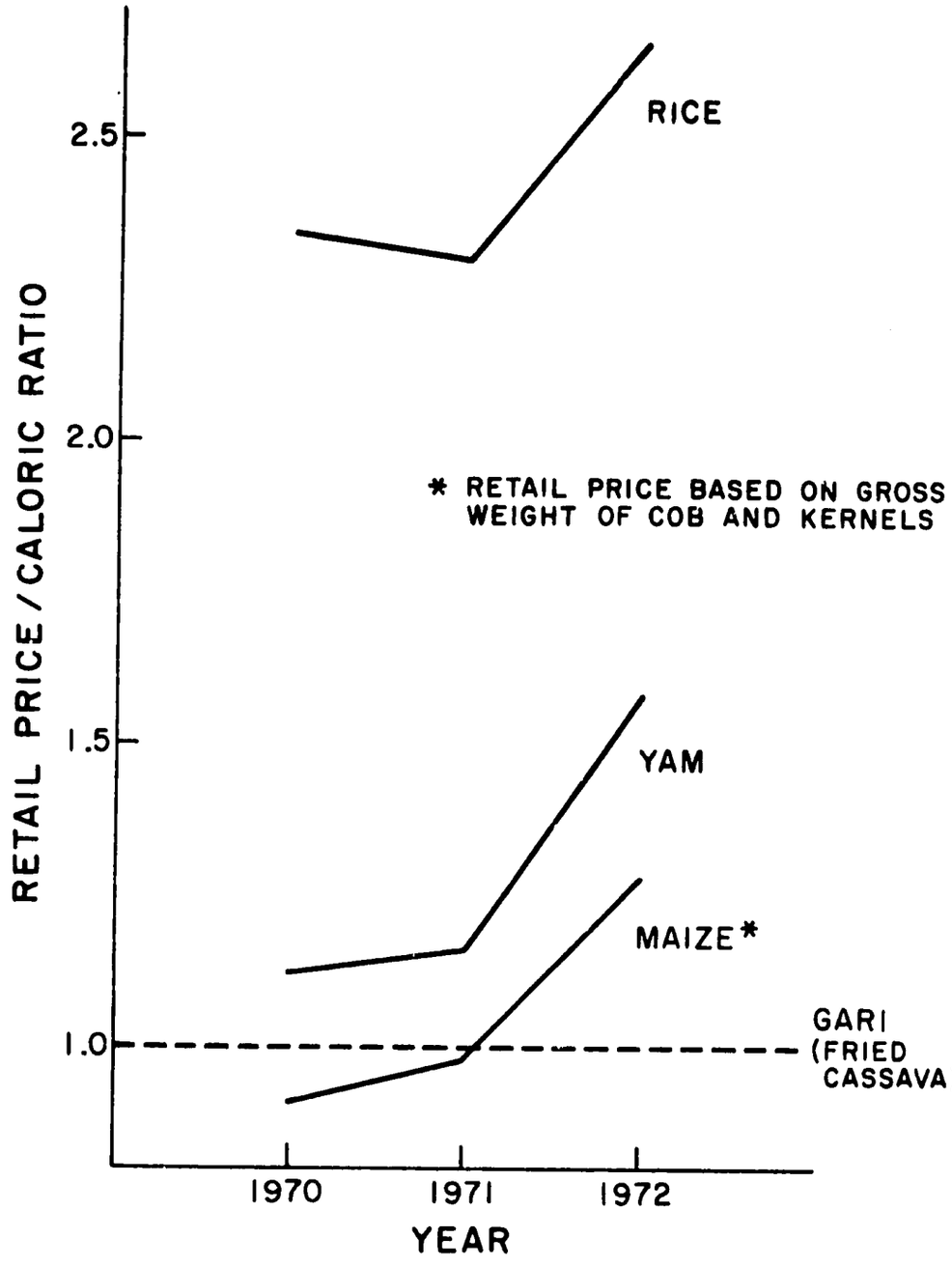

FIGURE 1

RETAIL PRICE/CALORIE RATIO FOR SELECTED FOOD CROPS, 1970-1972
(Based on average annual retail prices from 5 Southern States, Lagos State not reporting)

Sources: V. A. Oyenuga, Nigeria's Foods and Feeding Stuffs and Retail Prices and Consumer Indices for Selected Urban Centers, 1970, 1971 and 1972, Federal Office of Statistics.

more per calorie purchased than the fried cassava product gari. In the urban areas such foods as melon seeds, snails, and the bitter and water leaves have market prices, some of which are surveyed periodically. Melon seed (Citrullus vulgaris Schrad.) for example, was priced at about 32 kobo per pound in Ibadan, which was 14% lower than the price of boneless beef.[23] Since the melon seed is reported to have a composition that was analyzed as crude protein, 33% of dry matter shelled, and had an energy value of 686 kilocalories per 100 grams of dry matter, it is both a protein rich and high calorific food.[24] On a crude protein measurement basis, it appears to be about one third less costly than beef. Although exact prices could not be obtained, two of the leaves that are used in stew preparations, water leaves (Talinum triangulare Willd.) and fluted pumpkin leaves (Telfairia occidentalis Hook) are reported to contain about 21% crude protein (as a % of dry matter) prior to cooking. These and others like the bitter leaf (Vernonia amygdilala) are widely eaten. These are aggregated under the heading green vegetables which sold for approximately 10 kobo per pound in the March 1973 survey in Ibadan.[25] Okra is another vegetable that is used frequently in stew preparation and is reported to have a 15% crude protein content (as a % of dry matter).[26] Unfortunately, prices could not be obtained for this food.

Marketing Cassava and Related Foods

While adequate descriptions have been written about the retail

and wholesale markets that serve to distribute cassava products and their related foods between producers and consumers, there seem to be limited sources that actually analyze the subject. The reasons for this are unclear but probably are related to the belief that markets are merely responsive mechanisms to activities on the parts of buyers and sellers and thus any changes are clouded with the risk of disrupting external processes. Actually, if the market is viewed as a link between the producers and consumers, it is feasible to attempt to strengthen that link so that risk from the sellers viewpoint is reduced, and buyers reap the rewards of this lower risk through lower prices and better quality products. Jones, in his book Marketing Staple Food Crops in Tropical Africa[27] has taken a position close to this statement and will be referred to as we proceed to examine the markets in southern Nigeria.

Hodder and Ukwu provide an excellent description of market activities in Southern Nigeria.[28] Primarily because of poor storage facilities and transportation means, there is an abundance of markets in both rural and urban locations. While it is apparent that each serves a definite function in both the exchange and social settings, each transfer production function adds to the price of the consumers purchase. Whether or not the price increase for the function is worthwhile, or economic, is dependent upon the process itself and its relation to other processes. For example, forestalling, the function of buying from market women before they reach their destination (perhaps a town market) is a widely held practice. The

forestallers assemble enough of a particular product, then go to the market and sell the bulk. This activity provides the seller with early cash for her commodities and a larger volume exchange for those who later purchase from the forestaller.

The distribution channels for cassava products can be as simple as from a farmer's field to his own table or as complex as involving up to seven or eight middlemen between producer and consumer. However, the average number of transactions is four or five from farm to household.[29]

There is more activity in the distribution of processed cassava products than in the raw roots primarily because cassava roots begin to decay within forty-eight hours after harvesting and secondly, because the roots are so bulky. Processed gari or lafun keeps considerably longer and is packaged more easily for transportability. Further, due to the reduction of water content in processing, the energy value per unit purchased is higher for a product such as gari than for the raw root.

A general scheme of the market organization is illustrated in Figure 2. The farmer sells his crop to a processor, who could be his wife, or to a woman from another household. Usually the farmer prefers to sell to unrelated women since he believes he will receive a higher price. Selling the roots sometimes occurs prior to harvest. A trader speculates on the future marketability of cassava and purchases all of the plants growing on a certain acreage, or a trader goes to a farm and buys the roots on the spot. However, in

FARM

VILLAGE PROCESSING

LOCAL PERIODIC MARKET

OTHER LOCAL FARMER'S HOUSEHOLDS

BULKED FOR SENDING TO TOWN MARKETS

BULKED FOR SENDING TO OTHER PERIODIC MARKETS

URBAN MARKET

OTHER TOWNS

MAIN TOWN MARKETS

URBAN CONSUMER

OTHER PERIODIC MARKETS

URBAN CONSUMER

OTHER PERIODIC MARKETS

FIGURE 2

GENERAL MARKET STRUCTURE

Source: B. W. Hodder and V. I. Ukwu, Markets in West Africa, (Ibadan: Ibadan University Press, 1969), p. 74

locations with a greater abundance of periodic rural markets, the farmer often takes his own harvest to market. Quite often in pulling the roots, laborers are employed. Either they are paid by the farmer on the basis of the number of plants harvested, or they are brought to the farm by the buyer and paid a percentage of the purchase price of the roots. Before the sale of the crop is made, the farmer can take advantage of the in-the-ground storage capability of cassava rather than having to invest in facilities.

In Table 7 an example of the estimated price structure for gari is shown. While this is based upon only rough approximations, it provides a rudimentary profile into the economics of the transfer processes. Based upon this structure, production accounts for nearly two-fifths of the final retail price while marketing activities make up the remainder. Thus the consumer might be paying as much as over 60% of the price of cassava products for nutrient transfer production functions. However, as a very large number of petty traders are involved in cassava distribution, nearly all of those engaged in these exchange activities are in the lower income classes.

For example, the markets where cassava products are sold are highly concentrated with buyers and sellers and the dominant form of sale is small scale. Jones reported an average number of nearly 1200 sellers in each of 48 rural markets surveyed in the Western State.[30] Approximately 175 of these traders were selling staples; this number agrees with observations taken in the East.[31] Further

TABLE 7

Estimated Gari Price Structure

Item	Cumulative Price Kobo/lb	Cumulative %
Producer's Price*	1.7	38
Processors Price (Farm Laborer)	2.2 (.05)	51 (1)
Wholesalers Price (Transportation)	3.9 (.20)**	88 (4)
Retailers Price (Rent)***	4.4 ---	100 ---

*If a farmer sells at approximately 3.4 kobo/10 lb of cassava roots and it takes approximately 5 lbs of raw root to make 1 lb of gari.

**Variable function of weight and distance.

***Rent can vary from a percentage of the sales to fixed prices per time period.

****Inflation is not accounted for but would be equally distributed amongst all groups.

Source: Based on field observations.

estimates reveal that as many as 5000 sellers have participated in some of the larger rural periodic markets. Some of the large urban daily markets in cities such as Ibadan and Enugu contain even a higher number of sellers who cater to over 30,000 people in a single day.

Average sales revenues in both rural and urban markets are highly variable. Our observations indicate that they range between less than 100 kobo per day to over 1000 kobo per day for retailers. The distribution shifts to slightly higher revenues for wholesalers. It is not an infrequent occurrence, however, to find traders who perform both the retail and wholesale functions and thus receive an income from mixed sales.

The integration that occurs within the marketing channels has predominant spatial and temporal characteristics. Rural trading concentrations between wholesalers and retailers are facilitated by market rings and the periodicity of these markets. Geographically, markets are located in circular or elliptical sequences and meet on 4 to 8 day intervals. In this manner, markets within the ring will be open on successive days, allowing a larger contact area for exchange of both products and information.

For the ubiquitous transportation means of "headloading," the traditional system has functioned fairly well. With mean distances traveled averaging about 5 miles per day, mainly along footpaths, the traders have been exposed to a variety of transfer outlets. Increasing demand, however, for greater supplies has stressed the

system so that the construction of better roads between large urban centers has tended to alter traditional rural outlet locations. Greater quantity shipments both to the southern and northern cities can only be managed by road, rail or boat. Since these food deficit centers are growing more rapidly than rural areas, the effects upon the periodic market structure are of deep concern.

The urban centers have large daily markets, typical of food deficit areas, which in addition to receiving products from the rural periodic markets for retail transfers redistribute products to other urban centers and rural communities. For example, estimates taken in Ibadan showed that the outflow of gari from the city markets was over 15% of the inflow.[32] This indicates that wholesaling activities involving resale to other locations is not limited to rural periodic markets but is an important transfer in urban markets as well. Further, price correlation studies have revealed a certain amount of integration in the flow of information between major urban centers throughout Southern Nigeria.[33]

Firm data could not be gathered reporting the employment figures of those engaged in trading cassava products. Our own estimates place the total at well over a million people, most of these self-employed. Even assuming that 80% of the production of cassava was marketed by only one million persons, the revenues spread equally among these traders would only amount to around 1000 kobo per month. Thus we must conclude that unless cassava traders exchange other products or more than merely the traders profits support the family,

the income from marketing cassava on a per capita basis is extremely inadequate.

Processing Cassava

Most of the cassava that is grown enters the market economy in processed form. When cassava is used as a subsistence crop, it is also processed into forms suitable for ingestion. The main reasons for converting the raw root are palatability, removal of the toxic HCN, and marketability (longer storage time and easier transportability). Based on production figures from 1969/70 of 9 million tons of cassava grown[34] and estimated conversion rates between 20% and 50%, it is expected that between 1.8 and 4.5 million tons of processed cassava were distributed and consumed in that year, and that the amount is growing. Since most processing takes place in rural communities, this indicates that it is an important industry, and one that is currently very much decentralized.

Throughout Southern Nigeria there are probably hundreds of minor preparation techniques for converting the raw cassava roots into finished and semi-finished food products. Okigbo has specifically noted seven different products out of an estimated two dozen with which he is familiar. These included boiled roots, roasted roots, farhina (similar to tapioca), fermented roots, flaked roots, as well as the more well-known cassava flour and gari (cassava meal).[35] Coursey has highlighted several of these techniques through a rudimentary classification of preparations.[36]

In the rural villages, where most of the traded cassava products originates, the women, usually farmer's wives, have the responsibility of processing. For cassava flour and meal, labor requirements are high, capital inputs are small, and productivity is reported to be low. Most steps in the preparation of these foods are carried out manually. Peeling, grating, leaching, pressing, drying, sieving, frying, milling, packaging and transporting are some of the procedures handled by the processor or by members of her family. The steps are the same whether done for commercial purposes or for home consumption. By-products from processing are the peels, the stems and leaves, the fermentate, and the waste-like fibres. Of these, only the peels and stems are reused, the former for feed to goats and chickens and the latter for replanting.

Two of the procedures, grating and milling, have been mechanized to some extent. Grating is often accomplished by a gasoline driven hand-fed rotary machine. There may be one of these small machines permanently located in a village. There is also a mobile version often owned by a local entrepeneur who charges a modest price for grating services as he travels from house to house.

Milling, which is the final step in processing cassava flour, used to be done completely by hand through mortar pounding or flat rock grinding. Now, especially in the urban centers, there is a growing number of power driven mills where traders and housewives can take their semi-finished chip-like cassava and purchase milling services. Not only do the millers form a part of the marketing chain

through their grinding operations, but also they sometimes take possession of the flour for resale. In contrast, the owners of the mobile grating machines do not take title to the unfinished cassava products.

Both of these mechanical processing steps, grating and milling have been adopted where economically feasible. It is possible that the impetus for their acceptance came from the women who benefited from the labor saving -- similar to the initiation of the tortilla factories in Mexico. This result is not surprising since producing processed cassava flour and meal by manual means is time consuming. For example, reports from surveys and time studies indicate that cassava meal productivity ranged between 1.5 lbs and 2.4 lbs per man hour.[37] Further, these estimates probably did not include the preliminary steps prior to frying.

There are currently two known government sponsored projects for mechanizing the manufacture of cassava meal. One is being conducted by the East Central State government through the Project Development Agency (PRODA). They are currently in the prototype stage of developing small scale village units for peeling, grating, sieving, coring, and frying. It is too early to estimate production costs at this time, but they are expected to be low. The other project is for a large scale urban plant which is being carried out at the federal level. Under the combined auspices of the Federal Institute of Industrial Research and a British engineering and manufacturing corporation, development of a 10 ton/day capacity

plant has been proceeding over the last several years. Production costs have been estimated to be less than 100 naira per ton and expected employment needs will total 80 persons per shift.

While promotion of these activities has emphasized increased productivity, other aspects of the results of these activities need to be investigated. Potential by-products such as displaced labor, alteration of supply and market channels, price structure modifications, and nutrient alterations need to be reviewed. With regard to nutrient alterations, not enough is presently known about the changes in nutrient composition of cassava as it undergoes any type of processing.[38]

Another factor which may be the most important in determining the success or failure for any of the mechanized schemes is the fact that Nigerians are able to differentiate on the basis of taste, color, and texture in addition to price. In fact, they are very selective in their purchases of cassava products, even over the whole range that is currently produced on a highly diverse basis.

Farm Practices and Production of Cassava

Historically, farming practices have closely followed the schemes of shifting cultivation, bush fallow, some planted fallow, compound farming, tree farming, minor floodland cultivated and large scale plantations for selected cash crops.[39] Adegboye has given six categories of usage which vary from compound use to uncultivated land to land under annual flooding.[40] Most of the landholdings are

small. The land tenure system is such that much of the land is held communally while individuals have the rights to farm certain contained parcels.

Over the last several years, cassava farming in particular has been managed primarily through both bush fallow and compound farming methods. In each system, slash and burn techniques are usually applied to clear the land of vegetation (bush). Where farmers rely entirely on bush fallow cultivation, the designated area will rotate over a fixed, larger area which makes up the entire farm. Depending upon the fertility of the soil, the land will yield several crops and then be allowed to "rest" and regenerate nutrients from the new growth of bush. During the restoration, another area is cleared and cultivated.

For compound farms, bush fallowing is combined with small plots under permanent cultivation. To maintain fertility of the soil being cultivated, fertilizers such as manure and refuse as well as leguminous crops are employed. Usually, the land under permanent cultivation immediately surrounds the house while land being fallowed is located some distance away. In some urban areas, city dwellers continually cultivate small plots in vacant lot type areas and sometimes keep land parcels outside the city under fallow.

Whether farmers use one system or a combination, they assuredly will multiple crop and intercrop several plants. It is common to see cassava growing in the same plot with small plants as yams, maize, beans (cowpeas), melons and plantains. For example, in a

study on ecological perspectives of Nigerian farming, Rawal and Egunjobi concluded from a development of crop distribution maps that nowhere in the survey areas did subsistence farmers exclusively practice monoculture.[41] By utilizing intercropping schemes, the farmers illustrate their intimate knowledge of the environment so that they may receive such benefits as risk reduction from diseases, pests and prices, maintenance of soil fertility, labor reduction by common weeding, less soil erosion, and increased productivity from selective successive plantings.

Employing tools such as machetes and hand hoes, farmers have combined their cultivation practices with folk wisdom (such as the use of indicator plants to terminate and initiate fallow sequences) to gain a certain amount of agricultural achievement in spite of limited knowledge of sophisticated techniques. However, with increasing population pressures, it will be important to determine the effects of increased demand on traditional supply practices.[42] While forecasts show the future supply levels necessary to satisfy projected food needs, it is questionable whether current practices alone will provide for the large magnitude of increases in production that are called for.

Between 1950 and 1970, the amount of land under cultivation grew at a rate of approximately 1.5% per year.[43] Meanwhile, between 1959/60 and 1969/70, our estimates indicate that land devoted to cassava crops grew at a rate of about 2% per year.[44] Further, in analyzing estimates based upon harvesting old cassava, the growth

rate of the acreage harvested between 1965/66 and 1970/71 was over 5%.[45] If we add in the new cassava planted[46] and the numerous small urban plots, the growth rate is expected to be even higher.

Seasonal variations play an important role in those areas where cassava is a staple crop. While cassava is planted and harvested year round, other crops such as maize, yams and beans are planted before the rains, and harvested during and after the rains. The favored crop, such as yam, will be planted first, followed by perhaps maize and beans. For those farmers engaged in this type of intercropping, the supplies of these crops diminish from about March through July. During these time periods, cassava will be heavily relied upon, especially if temporary shortages occur.

Figure 3 illustrates the effects of season variation in production on retail prices and calorie intake of cassava products and yams. Notice how the shortage of yams in the hungry season is reflected in higher yam prices and lower intake of calories from yam. At the same time cassava intake is increased and the retail prices reflect the increase in demand. Because the production of cassava is fairly constant throughout the year, it is able to act as a security crop.

The dependence on cassava is also seen in the fact that it is planted on marginal soils. Yams, which are the traditional crops of most of Southern Nigeria, need rich soil and are thus planted on compound land or freshly cleared land that was in fallow for

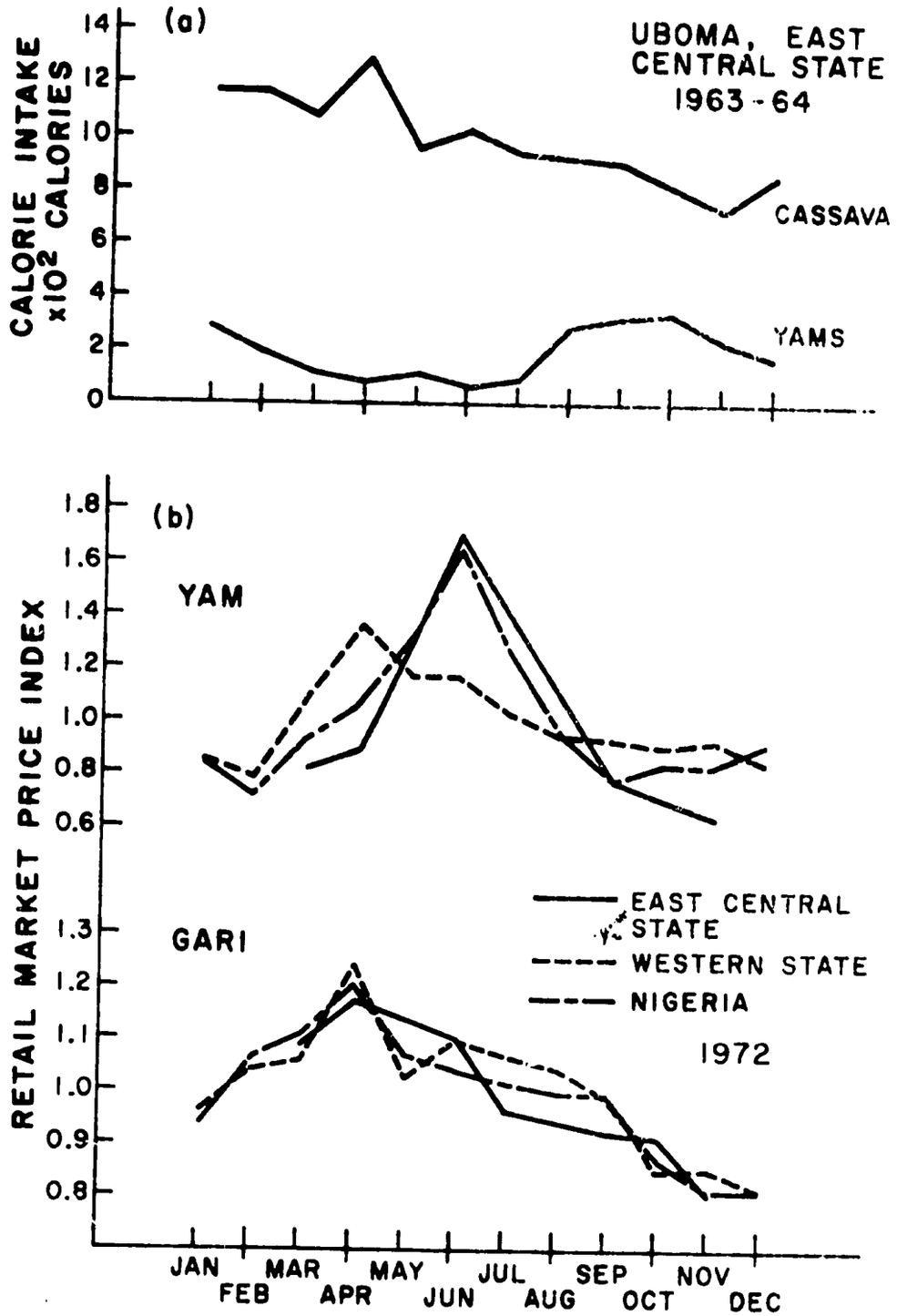

FIGURE 3
SEASON VARIATION OF CALORIC INTAKE
AND RETAIL MARKET PRICES FOR CASSAVA (GARI) AND YAM

Sources: Uboma Study and the Retail Prices and Consumer Price Indices for Selected Urban Centers, 1972, Federal Office of Statistic

several years. Often cassava is intercropped with yams in this type of soil. With increasing demand for food, land is being farmed more continuously, fallow time is being reduced and thus soil fertility is reportedly declining.[47] Consequently, the planting of cassava has increased and cassava is frequently planted as a sole crop on the poorest soils. Further, in the urban areas, notably in Enugu in the East Central State, cassava plants have been observed in plots in vacant lots where the soil is practically void of nutrients. While these cassava plants are sparse with leaves and look extremely unhealthy, some yield will be produced that can bring both food and income to the owners. No previous studies of land usage have taken these urban holdings into account.

As previously mentioned, most of the landholdings are small. Whether or not this type of tenure limits production has not been sufficiently studied. It may be argued that small holdings foster very high amounts of labor requirements that may be less efficient in areas that could easily lend themselves to mechanization. While this does not seem to be the case in cassava dependent environments, there are some current efforts to change land tenure schemes, some of which are indigenously derived. Studies have shown that more land is being subject to individual sale, a previously little used means of transfer.[48] Others are being sponsored by State agencies, such as the one being carried out by the Agricultural Development Authority in the East Central State in an effort to bring land under cooperative cultivation. This latter method is an example of the

State being given the responsibility for organizing its own land reform schemes.

Specifically, in regard to cassava, there are many avenues, both in research and application, that will need to be used to increase production, productivity and farm income. We will explore a number of these in our recommendations. It must be noted, however, that none of our findings nor our recommendations would lead us to believe that cassava is becoming less important, or for that matter, that it should be. Indeed, it seems apropos to conclude this section with a quotation from Jones,[49] written nearly fifteen years ago, that we consider to be even more relevant at this time:

> The same forces that caused the spread of manioc over a great part of West Africa in the past 150 years may be expected to continue to operate in the future. Increased urban populations, more intensive cultivation, recognition of manioc's higher productivity and of its unusual resistance to pests, disease, and drought will continue to favor its production. Manioc is probably not yet grown in all areas where economic production is possible and it may be expected gradually to enter such areas. It is likely to be increasingly important in native diets, especially in cities and towns. The ease with which manioc meal can be transported, as compared with yams and other roots, gives manioc a clear economic advantage in the provisioning of cities. And its low production cost will make the market price of manioc meal less than the price of the cereals.

Non-Cassava Based Food Products

In examining the cassava dependent environment in Southern Nigeria, we were exposed to numerous other foods that were taken

in the diets to supplement and complement cassava products. Although the scope of our study limited the investigation of these other food products, the information gleaned from our field study in combination with fragments of data from published sources provides a rudimentary but necessary description of several other potential intervention points.

There is some data available concerning the nutritional values of the raw materials. However, there is virtually no information on the final consumed products nor for the output at each intermediate stage. Consequently we have limited our discussion of these other foods to only those that appeared to be the most important. Table 8 lists the names of these products that can be termed as "partners" to cassava in the diets. One of the important factors to recognize is that these cassava related foods are significantly more sensitive to income and price changes than cassava. This is emphasized here because of its influence on nutritional satisfaction from traditional diets inasmuch as these related foods are the protein suppliers for the consumer.

Other starchy foods commonly eaten in Southern Nigeria are yams, cocoyams and plantains. These root and tuber crops often enter the diet as substitutes for cassava, but may also be seen as complementing cassava in the overall dietary schedule. If we focus on a single meal, a family may substitute one starchy staple for any of the others. However, by observing the daily intake of a family, we usually discover that some cassava products appear along with one

TABLE 8

Non-Cassava Based Food Products

Cassava Related Products	
Yams, Cocoyams, Plantains	Roots and Tubers
Maize, Rice	Cereals
Cowpeas	Grain Legumes
Melon Seeds, Cotton Seeds	Oil Seeds and Nuts
Fluted pumpkin leaf, Water leaf, Bitter leaf, Okra, Tomatoes, Onions, Peppers	Green Leafy Vegetables and Fruits
Red Palm Oil	Fats and Oils
Beer, Palm Wine	Beverages
Beef, Goats, Sheep, Pigs, Poultry	Livestock
Cheese, Milk	Milk/Dairy products
Fish (dried and fresh), Snails, Periwinkles	Aquatic Products

or another starchy staple; thus these other roots and tubers can be classified as complements to cassava in the daily diets.

A host of other crops and animal products are produced and consumed in varying quantities in Southern Nigeria. It is evident from the literature that many of these foods have not received much attention. In view of the potential economic savings and nutritional gains from studying these neglected indigenous foods, it is our recommendation that more efforts be expanded in securing systematic knowledge concerning their values.

Yams

Of the other roots and tubers, yams are definitely the most preferred in terms of production and consumption measures. The species cultivated in Nigeria include D. cayenensis Lam., D. rotundata Poir, D. dumetorum (Kunth) Pax., D alata L., D praehensilis Benth., and D. bulbifera L. Estimated production figures for yams as well as for the other starchy crops are presented in Table 9. These figures show yam production as being greater than cassava; indications are, however, that the cassava data is grossly under-reported.[50] Nevertheless, yam production is relatively large and it has been reported that over 4 million acres of land were planted with yams in 1968/69.[51]

Yams are indigenous to West Africa and are intimately integrated into the social, cultural, economic and religious aspects of life.[52] The harvesting of wild yams was perhaps the earliest form of agriculture in all of Africa. In Nigeria, reported to be the world's

TABLE 9

Estimated Production of Food Crops (Million Metric Tons)

Product	1959/60	1960/61	1961/62	1962/63	1963/64	1964/65	1965/66	1966/67	1967/68	1968/69	1969/70
Cassava	6.882	6.682	7.400	7.600	7.800	8.000	8.200	8.400	8.600	8.820	9.040
Yams	8.910	12.109	13.474	13.102	15.885	14.563	14.736	11.963	10.670	12.392	15.155
Cocoyams	0.643	0.652	1.150	1.549	1.555	1.625	1.606	1.437	1.625	1.308	1.793
Plantain	0.795	0.810	0.800	0.820	0.835	0.855	0.880	0.900	0.920	0.945	0.970
Sweet Potato	0.149	0.149	0.150	0.155	0.160	0.165	0.170	0.175	0.180	0.185	0.190

Source: A Quantitative Analysis of Food Requirements, Supplies and Demands in Nigeria, 1968-1985, op. cit., p. 50

largest producer of yams,[53] traditional ceremonies still accompany yam production, and the crop is said to be a "man's property," indicating the high status given to the plant.

Yet, with all of the importance given to yams, they are slowly losing ground in relation to cassava. This is happening because the yam is an expensive crop. It must be planted on the most fertile soil in mounds that are built to concentrate soil nutrients and insure adequate drainage. Yam vines must be staked and trained, and weeding of the plots takes place more often than for cassava. Although much of the costs of production can be spread over several crops since yams are usually intercropped (common weeding for example), it is reported that between 150 to 240 man days are required for cultivation of 1 hectare of land where yams are grown.[54] A portion of the harvest is used for seed so that not all of the production is available for consumption. Nigerian estimates of seed rate are approximately 2700 lbs/acre.[55] Furthermore, there are additional losses in production due to pests and diseases and inefficient farming practices resulting from increased demand for the crop. Losses in storage, which takes place in barns where yams are tied to poles to permit air circulation, vary from 10 to 15 percent during the first three months up to 30 to 50 percent after six months.[56]

When these production and storage costs are combined with high transportation costs due to the bulkiness of yam roots, it is no wonder that prices per 1000 calories have been estimated to be as

much as four times the price for cassava products.[57] Even after the retail purchase, preparation of the yams by pounding is a laborious and time consuming activity.

In spite of the high costs of yams, their nutritional value is high enough to influence further work in improvements. If we consider utilizable protein, yams are only marginally inferior to maize and rice.[58] Programs, such as the one suggested by Coursey and Martin[59] to systematically select and multiply improved varieties are potentially very beneficial given the high food production capacity of yams.

Cocoyams

Cocoyams, which are edible aroids, are the third largest produced starchy food crop in Southern Nigeria. They are also used as substitutes/complements for cassava. The species *Colocasia esculenta* L. and *Xanthosoma sagittifolium*, commonly referred to as taro and tannia respectively are the most important species in terms of their value as food. They are grown primarily as subsistence crops, with a relatively small proportion entering the markets compared to cassava or yams.

Existing data indicates that the three southeastern states, the South Eastern State, the East Central State, and the Rivers State, are the largest producers of cocoyams.[60] Warid reported that tannia was displacing taro as production rose.[61] Ede beke (tannia) as it is called by the Ibos is probably more suitable for food preparations and is consequently the major reason for the substitution

of tannia for taro.[62] Comparative yield studies have shown higher yields from tannia than taro (70 ton/ha after 10 months versus 6.5 ton/ha after 6.5 months) but it is not known whether this has been influential in causing the displacement.[63]

Cocoyams are planted as sole crops and as mixed crops. Overall seed rate is reported to be approximately 1340 lbs/acre. Thus, like yams, the full production capacity is not utilized as food since some of the corm is used for replanting. Also similar to yams is the requirement of fertile land so that often cocoyams and yams are observed planted together.

Plucknett reports that on first planting, little weeding is usually necessary; however, when grass weeds are abundant as in later plantings, weeding becomes very difficult.[64] Although little research has been done on weed pest control, Nigerian farmers are known to cover the cocoyam plots with palm fronds to retard the weed growth.[65]

After harvesting, cocoyams are often stored in the same barns with yams but rather than being hung from racks, cocoyams are placed under covered heaps. However, conditions for storage are humid, hot, and poorly ventilated; consequently, losses have been reported to be as high as 25% of production. This might be used as an incentive to delay harvesting up to 15 months since longer in-the-ground storage has not cause losses, but rather, has resulted in higher yields. The only limiting constraints might be population pressure for more food and a greater potential for damage drom disease.

In food preparation, the corms are usually baked or boiled and made into fufu. Like the other starchy foods, cocoyams are eaten for their energy value since they compare favorably with cassava and yams on the measurement basis of calories per 100 grams of edible corm.[66] On the content basis of crude and true proteins, they are comparable to yams and thus, somewhat superior to cassava.

Cocoyams are generally not a fovaroed crop although in some village communities in the southeast they might be produced and consumed in higher quantities than yams. The Uboma study, for example, showed that cocoyams accounted for only 8% of the per capita intake of starchy foods. While cocoyams show potential in terms of their nutritional value and therefore merit further scientific research, other recommendations must await a greater gain in knowledge about the crops.

Banana and Plantains

Although little statistical data exist regarding bananas and plantains in Nigeria, they are known to be present in many diets. Since some confusion remains as to the difference between bananas and plantains, we will use the distinction that is cited by Jones which classifies the former as a dessert food and the latter as a cooking food. Based upon this distinction, our discussion concerns plantains as the fruit mainly used for cooking in Nigeria.

Primarily taken as a supplementary source of energy, plantains (*Musa spp.*) provide only about 2% of the average national per capita calorie supply.[67] In some local areas, however, they are consumed

regularly and thus are a significant source of food energy. These areas fall within the southern portion of the country where the climate is suitable for their growth.

Plantains are grown in rich soils, either in pits around compounds or in a semi-wild environment, where the plant is not continually maintained but the fruits are harvested by the owner of the land. When the crop is cultivated to a considerable extent, it is often used as a cash crop. Although not of major export proportions, the plantain crops do enter interregional trade as they are shipped from the south of Nigeria into the Northern States.

Transportation and storability present some problems since the crop is bulky and susceptible to damage in handling. However the extent of losses using current methods is not sufficiently known. For calculation purposes, the Ministry of Agriculture has assessed the waste at 5% of production.

There are many preparation techniques utilized for converting plantains into a suitable dietary component. Probably, the most popular recipes in Nigeria are frying, boiling into a porridge-like dish, and conversion into a flour. Analyses of flour composition from several secondary sources show a maximum crude protein percentage of 4.9 while the maximum starch concentration was 78 per cent.[68] All of the preparation forms indicate that it is eaten as a staple to be combined with other foods in meals.

Maize and Rice

The two cereal crops that are significant secondary staples

in southern Nigeria are maize (Zea mays) and rice (Oryza sativa and Oryza glaberrima). Though not as important as the starchy roots and tubers when compared on the basis of quantities produced, mean annual demand for maize and rice is rising at the rate of approximately 3.5 percent and 5.2 percent respectively.[69] Table 10 illustrates the corresponding estimated production growth trends for both cereals over the ten year period between 1959/60 and 1969/70.

Maize is grown primarily as a food crop with only a small proportion utilized for grain for livestock and poultry feeding. It is the principle cereal crop in the southern states and ranks only behind sorghum and millet in total country cereal production. Like most of the other food crops, maize is produced by smallholders on plots of land that are interplanted with other crops such as yams, cassava, cowpeas, and melons.

Estimated yields for maize in Nigeria are generally low when compared to high yielding varieties. In measuring production efficiency, the highest estimated yields per acre were recorded in the Benue Plateau State (outside the southern region) at approximately 900 lbs/acre.[70] Average yields per acre in the southern states are estimated at roughly 540 lbs/acre.[71] The causes of these relatively low yields are undetermined and the extent to which the problems lie in such factors as soil preparation, fertilization, pest and disease control and type of seeds is the subject of further research. Currently, there is an ad hoc compensation for the low yields as farmers often obtain two crops

TABLE 10

Estimated Production of Food Crops (Million Metric Tons)

Product	1959/60	1960/61	1961/62	1962/63	1963/64	1964/65	1965/66	1966/67	1967/68	1968/69	1969/70
Maize	0.669	1.069	1.109	0.993	1.169	1.120	1.160	1.133	1.100	1.056	1.586
Rice	0.095	0.156	0.153	0.258	0.196	0.221	0.232	0.200	0.386	0.353	0.325

Source: A Quantitative Analysis . . ., op. cit., p. 59.

in a year and consumers readily eat unripened maize.

In distribution, maize generally passes through the same channels as those of yams, and cassava. After maize is harvested most of the crop is sold almost immediately. Jones reports that losses in storage of both maize and rice are less than for yams.[72] However, this might be the result of having less quantity to store and thus makes the effort of controlling losses somewhat easier.

The marketing of maize is handled principally by small-scale retailers and wholesalers with margins low enough to indicate that price differences between the farm and the consumer are accounted for by shipping and handling. Since maize is grown throughout southern Nigeria, most of the crop enters the rural markets and is not transported over long distances but is resold within the local areas. This is undoubtedly related to the small scale of operations and the lack of extensive storage facilities.

Some of the maize crop is retained for subsistence by the farmers while the rest is sold commercially. As mentioned earlier much of the crop is eaten on the cob, either roasted or boiled. Additionally, the ripe grains are prepared for home consumption in a cooked mixture with other foods (pulses for example) and as a porridge mainly eaten by very young children.

Oyenuga's analysis of Nigerian maize showed a very close similarity to USA varieties.[73] Thus, the quality of proteins is relatively poor, especially in the amino acids essential to development, lysine and tryptophan. Since maize in the porridge form (made

from pap or "ogi") is often used as the weaning food, it only becomes a valuable nutrient, aside from its energy supply role, when mixed with other foods, such as milk.

Rice production in Nigeria is divided between the two types--swamp rice and upland rice. In the southern region of the country swamp rice is dominant in the southeastern states, while upland rice is the main type produced in the Western and Midwestern States. The white grained O. sativa is preferred to the indigenous and red grained O. glaberemina. Average yield per acre reported in the southern states (excluding Lagos State) was approximately 1700 lbs/acre.[74] Whether or not this figure measures the yield of one species in particular or is for a combination of the two is not known. Further, we do not know the breakdown for upland or swamp rice. We speculate that the measure is for some combination and therefore any efficiency ratings would be difficult to discuss. However, in a government sponsored village experiment in 1965, twenty-one farmers participated in a swamp rice project with controlled water irrigation. The yield from the clean paddies was 2800 lbs/acre over 2 acres of cultivated land.[75] Perhaps the results of this experiment are indicative of unrealized potential in obtaining higher rice yield using managed farm practices and planting different seeds.

The distances that rice travels between the farmers and the final consumers seem to be greater than for some of the other staples. This is probably related to the relatively low amount of acreage devoted to rice production throughout the country and the longer

life of the milled product. Farmers sell their rice mainly on their farms to middlemen who are then responsible for transporting, milling, and reselling the polished rice. Estimates have shown the number of transactions in rice marketing to be five in eastern Nigeria.[76]

Before rice reaches the consumer, it goes through three stages of processing. First the husks are removed and separated. Then the grains are hulled. Finally, the rice is brushed until it is suitable for retail sale. Usually, this milling is carried out by specialists who own and operate the machinery and who assemble the bags of "polished" rice for resale to wholesalers. In terms of price, the entire assembling operations account for between 10 and 20 percent of the retail price. Jones reported that, according to De We. Welsch, the parboiling and milling processes of Abakaliki rice being sold in Port Harcourt amounted to 5.2% and 5.7% respectively of the retail price.[77]

However, when measured on a nutritional basis, the milling operations are expensive in that they reduce the amounts of proteins, vitamins, and minerals that are available to the ultimate consumers. As much as 56% of the crude proteins, 56% of the fats, and 58% of the minerals are lost in removing the hull and the rice germ.[78] These reductions in nutrient content are possibly increased during production for the table since the rice is boiled prior to eating.

Together, rice and maize account for between 10 and 16 percent of the calorie intake in southern Nigeria.[79] Along with cassava,

they are probably replacing yams somewhat in the overall diets. Maize products reach the target groups of children being weaned and the elderly while rice is more evenly distributed among all consumer groups.

Evidence suggests that these cereals are eaten for their energy contributions rather than for their protein inputs to the diets. Dema's nutritional study showed that the average contribution of cereals as protein sources was about 7% of the total in three southern rural communities.[80] Since cassava is a higher calorie producing crop as well as a lower priced calorie food, maize and rice products are currently not equal competitors as energy foods. However, to the extent that these cereals have been accepted by the population, further improvements are possible. For example, a fortification process that treats maize products used for children might show promise as long as the product values are well understood. Improvements in the distribution network, such as in transportation and communication, would benefit consumers of other products as well as those made from maize and rice. The further introduction of higher yielding varieties and better farming practices could be beneficial if they were integrated into the entire food system.

Grain Legumes

Several species of grain legumes are produced in Nigeria including soybeans (*Glycine max*. Merr.), lima beans (*Phaseolus lunatus* Linn.), yam beans (*Sphenostylis stenocarpus*), locust beans (*Parkia filicoidea* Welw.), and cowpeas (*Vigna unguiculata* Walp.).

Of these species, the most important in terms of quanitites produced is cowpeas, which is a food crop taken by the indigenous population. While production figures are not available, we estimate that the total Nigerian production of grain legumes other than cowpeas is around 50,000 metric tons per year.

In comparison, cowpea production was reported to be roughly 900,000 metic tons in 1969/1970.[81] Thus, Nigeria is the largest producer of cowpeas in the world. The three northern states of Kano, Northeastern and Northwestern are reported to produce over 78% of the total Nigerian cowpea production.[82] Most of what is produced in the south is of a subsistence crop nature.

Cowpeas are mixed with other plants on the farms, intercropped with the cereals in the north and with the starchy food crops in the south. Overall average yields range between 99 and 320 lbs/acre.[83] Seed rate is estimated to be 25 lbs/acre and waste is reported to be 20% at the minimum.[84]

Much of the cowpea crop in the north is transported to the south as an interregional export cash commodity. Shipped mainly by train, cowpeas enter the large urban markets of the south. Traders in the southern markets communicate with those in the north via tele-communications. Information about cowpeas is thus transferred quite efficiently and quickly. The network of agents and assemblers is much more sophisticated that for most other food crops. After

they enter the city markets, they are redistributed via common channels much like the other food crops.

Hodder reported that over 60% of the Ibadan population ate beans at least twice a day.[85] It was suggested by Dema that the urban population ate more bean products than the rural people because they were better educated and had higher incomes.[86] However, rural consumption of cowpeas is increasing based on diet surveys which showed that between 1951/52 and 1963/64 the percent of calories from staples supplied by beans increased from 5.2% to 11.1%.[87]

Cowpeas are one of the cheapest protein providing food commodities in Nigeria. Eaten as a supplementary food along with the basic staples, cowpeas are included as a soup ingredient, fried into bean cakes or balls (Akara) and steamed in leaves as a paste (moinmoin). These preparations can be made at home or purchased from vendors in the marketplace. Since cowpeas are reported to contain all the essential amino acids in sufficient amount for growth,[88] their inclusion in the diets helps to compensate for the relatively low quantities of animal products consumed.

Cowpea production is projected to grow at a compound annual rate of 5.7%.[89] In order to realize this increase, further research and applied programs will have to be undertaken. If this is accomplished, a greater burden will be placed on the marketing channels and processors. Thus, at the same time efforts are being undertaken to improve yields and yield efficiency, experiments should be attempted to organize assemblers and increase the capacity of the processors.

Oil Palms

The oil palm tree (Elaeis guineensis Jacq.) is utilized both as a cash crop and as a food crop. The tree is indigenous to Tropical Africa, growing mainly on compound and semi-wild land. There are a few plantations, but as of 1965, their acreage amounted to less than one percent of the total palm area.[90]

As a cash crop, the fruit of the tree is valuable in the export of three products: (a) palm oil; (b) palm kernels; (c) palm kernel oil. Palm oil, most of which is made from the Tenera type tree, is exported but it is also used principally as a domestic cooking ingredient. It is extracted from the pericarp of the fruit mainly via hand operated mills. Nigeria is reported to be the world's largest producer of palm oil.[91] Palm kernels, contained in the nut of the fruit inside of the pericarp, are of a mugh higher export value than palm oil. The Dura type tree produces kernels that are relatively large with a thinner pericarp in contrast to the Tenera which has a small kernel and a thicker pericarp. Nigeria is the world's largest producer and exporter of palm kernels.[92]

Palm kernel oil, which is extracted from the kernel, is of a much lighter color than palm oil. The fatty acids of palm kernel oil are lauric, myristic and oleic in contrast to the fatty acids of palm oil which are oleic and palmitic.[93] Recent figures show that the export value of palm kernel oil is growing.[94] This is probably due to the construction of a large extraction plant in Lagos State in 1965. Nigeria is reported to be the second largest

exporter of palm kernel oil.[95]

As a domestic food crop, the palm oil that is produced is used extensively. Data indicate that production of palm oil has been fairly steady over the period between 1959/60 and 1969/70.[96] Most of the oil comes from the three southeastern states and is thus a large interregional export product. In 1969/70, Nigerian production of palm oil was estimated to be 623,000 metric tons.[97]

Palm oil is usually processed in the rural villages where a few farmers are also the owners of hand-press mills. This mills are local products[98] that are housed under thatch-roofed shelters and contain cooking drums, pounding drums, and a screw-type hand press. After harvesting the bunches at irregular intervals throughout the year, farmers weather the nuts for several days before taking them to the mills. Then the nuts are boiled, cracked and pressed. The kernels are kept by the housewives or are used as a payment in kind to the mill owner.

Much of the oil that is produced is sold as a cash crop. A familiar sight in the Southeastern states is a bicycle middleman transporting oil in four gallon tins between the mill and the rural markets. From the mills the processed oil enters the distribution channels going to rural markets and urban markets and continuing across the country as far away as the northern cities.

Palm oil is used in many food preparations. It is employed in many frying operations (such as yellow "gari") and is also included in soups. As a common cooking ingredient, the oil contributes

a substantial proportion of calories to the diets. In the average Uboma diet, palm oil provided nearly 20% of the calories in the average diet.[99] Based on means of four seasonal records in 5 southern villages Dema reported a range between 5.3% to 18.2% for the contribution of oils and fats (primarily palm oil) to the total calorie consumption.[100]

Three other products of the oil palm are also used by consumers. First, some of the palm oil itself is used in making soap. Second, the fronds are used for construction. Third, and most important, the tree is tapped for an alcoholic beverage product known as palm wine. The wine, drunk frequently on festive occasions and in the course of a normal day, is also a good calorie provider. With palm wine taken almost exclusively by the males, rural surveys show that alcoholic drinks provide between 2% and 5% of the daily calorie intake in selected southern Nigerian villages.[101]

Oil palm tree products have an important place in the economic and nutritional lives in southern Nigerians. Already there is an established institute, the National Institute for Oil Palm Research (NIFOR), in the Midwestern State that is studying and implementing programs for increased production. Much of this research supports the export nature of the crop. The potential for increasing the utilization internally probably is very great if land use studies and marketing and processing interventions could be initiated.

Melon Seeds

The seeds of the water melon (*Citrullus vulgaris* Schrad.)

are used in soups. They are one of the most important protein sources in the diets of Southern Nigerians, providing as much as 2 grams of edible protein per person per day. As much as 42 percent of the dry matter of heated and defatted melon seeds is crude protein.[102]

The melons are planted with other crops on smallholders' fields. They are distinguishable from the other crops on the farms since they are creeping annuals and thus are seen growing among the mounds as large ball-like fruits extending from crawling vines. In 1969/70, the Nigerian Department of Agriculture estimated total seed production to be 65,000 metric tons.[103]

One of the more common soups is named for the melon seed which is the principal distinguishing ingredient. The soup, the melon and the seeds are called 'egusi.' The seeds are ground and combined with other ingredients such as peppers, onions, tomatoes, leafy vegetables, palm oil, fish or meat and salt. This soup, like many others, complements the starchy staples in making up a meal.

Oyenuga's analysis showed that in addition to being high in protein content, the seeds are rich in phosphorous (1,777 mg/100g shelled seed), magnesium (578 mg/100g of shelled seeds), and potassium (538 mg/100g of shelled seed).[104] Further analysis with rats showed that the protein contained in the seeds was readily digestible.[105] In addition the seeds are a good source of vitamins A and D.

Cotton Seeds

Although cotton (Gossypium spp. Linn.) fibres and seeds are produced mainly as export crops, the seeds are sometimes utilized as an ingredient in soups. The seeds, which make up about 65% of the total weight of the cotton harvested, contain approximately 20% crude protein.[106] The overall essential amino acid content is good except for lysene, methionine, and tryptophan.[107] Further the seeds are rich in vitamin E and thiamine.[108]

Cottonseed contains a toxic phenolic compound called gossypol which presents a protein digestion problem for human ingestion. However, reports indicate that processing, such as soaking in water, reduces the harmful effects.[109] It is not known whether soaking or cooking removes the gossypol problem entirely but the soup is often used as a preparation for those who are sick.

Green Leafy Vegetables

The leaves of leafy vegetables are relatively good sources of protein, vitamins, and minerals in the Nigerian diets. Most of the leaves, such as the water leaf (Talinum triangulare Willd.), the fluted pumpkin leaf (Telfairia occidentalis Hook.), and the bitter leaf (Vernonia amygdilala), are used as soup ingredients. As such they supplement both the protein base of the concentrates in the soup (legumes, meat, and fish) and the starchy staples (cassava and yam).

Most of the leafy vegetables grow naturally from seed and are quick to mature. They usually receive little attention other than

keeping the animals away from the gardens around the compounds. To the untrained eye, these plants are often mistaken for weeds, which is an understandable but critical error given their high nutritional values.

Unprocessed water and fluted pumpkin leaves are reported to contain as much as 21 percent crude protein.[110] Because of the manner of preparation, prolonged heating and boiling, it is possible that the leaves do not contain as many nutrients in their final forms as they had in their raw forms. Thus, it is possible that due to current cooking practices, the main contributions of the leaves are to meet taste requirements.

Fruits, Berries and Bulbs[111]

Fruits, berries, and bulbs that are taken in the diets are divided into two broad categories. The first category includes those that are usually cooked prior to eating. Examples are okra (*Hibiscus esculentus* Linn.), tomatoes (*Lycopersicum esculentum*), onions (*Allium spp.*), peppers (*Capsicum fruiticosum*), and breadfruit (*Artocarpus altilis* Linn.). The second category includes those that are usually eaten raw and taken as snacks. Pawpaws (*Carica papaya* Linn.), mangos (*Mangifera indica* Linn.), pineapples (*Tillandsia* L.), and oranges (*Citrus aurantium*) are examples.

The fruits in the former category are complements to cassava. Two of these fruits, okra and pepper, are especially important. Okra forms the basis for a set of soups, as does the water melon seed. The soups, often thick, are a good source of vegetable

protein. Analysis shows that it contains between 11-14% true protein before processing.[112]

Peppers seem to be an ubiquitious ingredient in food preparations. Ground peppers are seemingly always included as a soup ingredient, resulting in a highly spicy and piquant preparation. On an average basis, intakes of as much as 62 grams of pepper per person per day have been reported.[113]

Animal Products

Animal products that are related to cassava are those that are included in soups or stews. The meat, either in fresh or dried form (smoked in the case of fish), comes from a variety of animals. Table 11 presents a broad classification of the variety of animal products along with production data from 1968/69. When these figures are converted to average per capita consumption of crude protein, the 1968/69 population consumed a little over 8 grams of animal protein per day.[114] The distribution of consumption is not uniform, however, and those people with higher incomes, those living in fishing villages, and those who own livestock herds probably consumed a much higher amount.

The food products made from livestock are relatively expensive. Studies done in several Western State villages show that beef ranks far lower than beans and slightly lower than fish products on a crude protein per kobo basis.[115] For example, in the Osegere village survey, for the same price, a consumer could purchase approximately 10 grams of crude protein from beans versus 1.5 grams of crude

TABLE 11

VARIETY OF ANIMAL PRODUCTS AND CORRESPONDING PRODUCTION UNITS, Nigeria 1968/69

TYPE	PRODUCTION Long Tons (x1000)
Beef	206,968[1]
Goat	90,625[2]
Mutton	30,000[3]
Pork	26,250
Offals	162,620[4]
Poultry	46,406
Bush Meat (rats, snails, monkeys, grass-cutters)	163,763
Aquatic Animals (fish, shrimp, crab, crayfish)	657,079[5]
Eggs	76,000
Milk	305,932[6]
Cheese	1,605[7]

[1] 18% imported
[2] 1.5% imported
[3] 9% imported
[4] 13% imported
[5] About 89% of the total is fish production
[6] 39% imported
[7] Nearly 100% imported

Source: A Quantitative Analysis . . ., op. cit., p. 107.

protein from beef.[116] These figures agree quite well with calculated values based on two urban centers, Ibadan and Enugu. Figure 4 illustrates a comparison of protein values per price units for beef, fish (dried) and beans (cowpeas). Fish and beef are similar in the amounts of protein purchased for the same money, but both provide between 3.5 and 5 times less protein per kobo than beans.[117]

Limited consumption data suggests that consumers react to the higher prices of beef products rationally and thus the quantities of beef in diets of the lower income groups are low. In 5 southern Nigerian villages, surveys showed that beef intake ranged between 3 and 15 grams of beef per person per day, which was less than 1% of the total daily bulk diets.[118] Another in-depth rural village study reported 22 grams of fresh beef eaten per person per day, also less than 1% of the daily bulk diet.[119]

There are several reasons for high beef prices. Production is very inefficient due to the traditional methods of raising cattle. Most cattle are owned by the pastoral Fulani who often move their herds hundreds of miles overland from the North to the South. The animals are subjected to diseases such as trypanosomiases and internal parasitic infections which result in losses. Furthermore, the poor quality of water and feed lead to thinner cattle at the time of sale. Combining production inefficiencies with the extant market processes, such as no grading and no standards, lack of refrigeration, poor transportation by truck or rail, and the large spoilage potential in the open air abatoirs, results in a wasteful

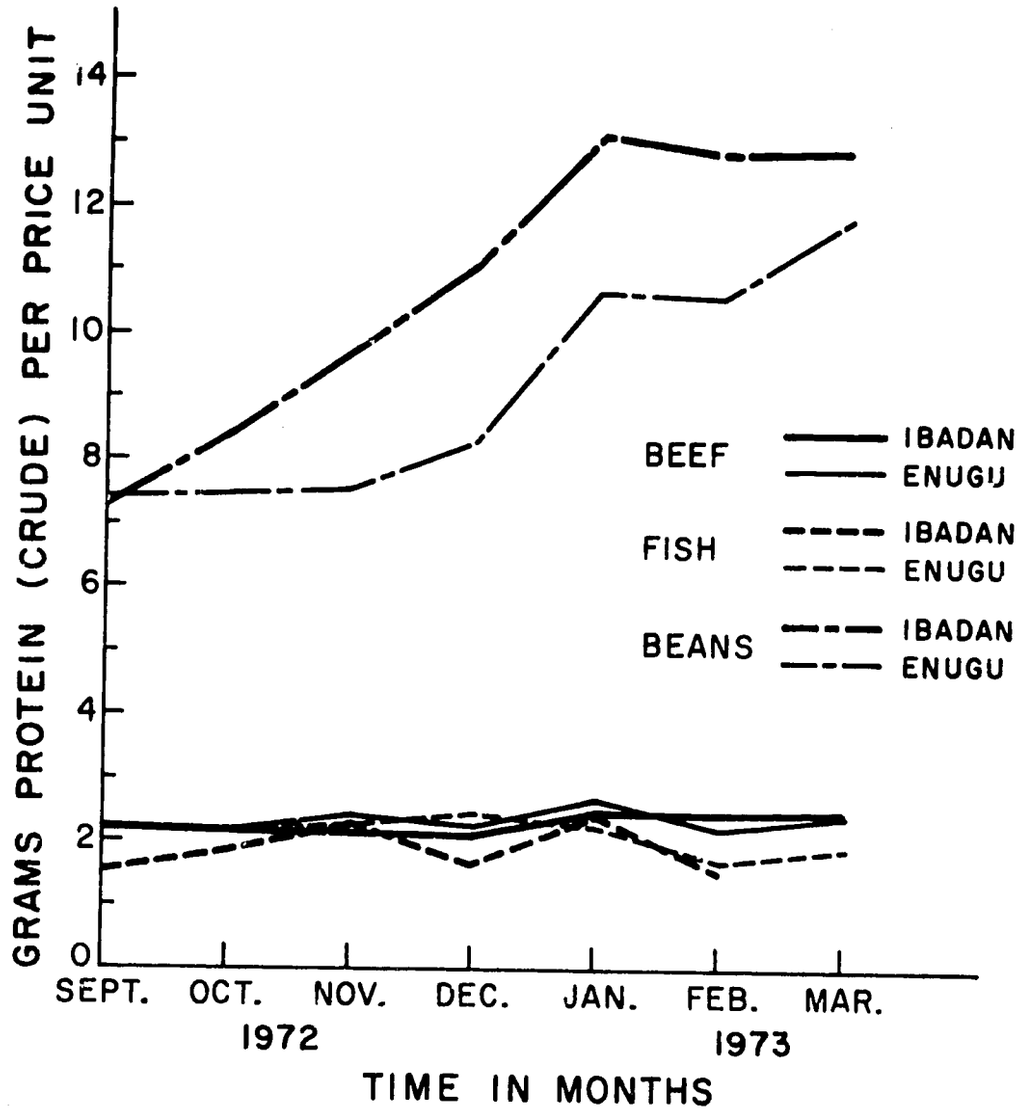

FIGURE 4
PROTEIN VALUES PER PRICE UNITS* OF FOODSTUFFS PURCHASED IN TWO NIGERIAN CITIES - SEPTEMBER 1972 - MARCH 1973

*From September 1972 to December 1972, price units were in pence
From January 1973 to March 1973, the price units were in kobo

Sources: Calculated from Retail Prices Given in Bulletin FOS/1972/PU10 Federal Office of Statistics, Lagos, Nigeria and Nutrient Composition of Foods, given in Composition of Foods, Agriculture Handbook No. 8, United States Department of Agriculture, December 1963.

and economically and nutritionally ineffective beef industry.

Information on the fish industry is somewhat puzzling. Our observations indicate that fish and other aquatic products are consumed quite extensively. On the basis of consumption, as reported by the Federal Department of Agriculture, these observations were supported as seen in the national consumption data which showed approximately 660,000 long tons consumed annually.[120] Checking with Southern village surveys of per capita daily intakes, the indications are that, on the average, between 4 grams and 30 grams of fish are eaten daily.[121] Further, the 30 gram figure is roughly equal to the national average.

The national average of beef consumption is approximately a third of the fish consumption -- about 9 grams per person per day.[122] Yet, the data on prices, at least on the retail level, show that fish and beef products are roughly equivalent in price. The question arises, therefore, that if prices are equal, why do consumers eat more fish than beef? Assuming that our information is correct, it might be possible to take advantage of the preference for fish and other aquatic products through industry improvements.

Currently, most of the fish consumed comes from Lake Chad, the Niger and Benue rivers, and various streams and tributaries located inland. Close to the bodies of water a good deal of fish is eaten fresh. However, as the distances from the sources increase, it is more common to see fish consumed in dried or smoked forms, especially in the food deficit large population centers. Unfortunately,

facilities in production, processing and transportation are too small and inefficient to meet the large demand. It has been estimated that between 30 and 40 percent of the weight of dried fish is lost to insect damage prior to final purchase.[123] This is probably due to the poor storage and handling capabilities which certainly exhibit a high potential for improvement. Given the large number of internal water ways as well as the long ocean coast, it also seems possible to increase production; this factor combined with the consumer preference characteristics indicates that improvements in the fish industry might be more attractive than those in beef production.

Other animal products that complement cassava are those from goats, sheep, pigs, poultry, bushmeat, and other aquatic products such as snails and crayfish. Unfortunately, information other than some production data is scarce. We do know that bushmeat is declining in supply and is becoming very expensive due to the encroachment of the growing human population. Feed costs for livestock are high although the possibility of low-priced cassava chips as a feed ingredient is being investigated. This, however would place livestock, especially pigs, in direct competition with man for food. If by-products, such as the cassava leaves that are currently fed to goats and the fermentate from cassava processing, could be used as livestock feed, it might be possible to produce more livestock economically without infringing on the supply of human food.

CHAPTER III - NOTES

[1]There has been a considerable amount of disagreement over total population estimates. Perhaps the 1973 official National Census will lessen the controversy.

[2]The Agricultural Economy of Nigeria, U.S. Dept. of Agriculture, Economic Research Service/ERS-Foreign 329, 1972, p. 33.

[3]Africa, South of the Sahara, (London: Europa Publications Limited, 1973), p. 613.

[4]Ibid., p. 613.

[5]Area Handbook for Nigeria, Chapter 13, Agriculture and Mining, p. 317.

[6]Kanti M. Rawal and J. K. Egunjobi, "Subsistence Farming in Nigeria - Ecological Perspectives," unpublished report from the Department of Agricultural Biology, (Ibadan, Nigeria: University of Ibadan, 1973), p. 3.

[7]The Agricultural Economy of Nigeria, op. cit., p. 4.

[8]Ojetunji Aboyade, "Economy," in Africa, South of the Sahara, op. cit., p. 612.

[9]Platt, B. S., "The Colonial Nutrition Problem," Proceedings of the Nutritional Society, 51 (1 and 2), 1946, pp. 2-15.

[10]Considerably higher in the southern states where starchy foods are the principle diet component.

[11]H. A. Oluwasanmi, I. S. Dema, et al., "Uboma, A Socio-Economic and Nutritional Survey of a Rural Community in Eastern Nigeria," The World Land Use Survey, Occasional Papers No. 6, (Bude, Cornwall, England: Geographical Publications Limited, 1966), p. 54. (In the remaining notes, this work is referred to as the Uboma Study.)

[12]Report of 1968 Certificate Course in Food Science and Applied Nutrition, supervised by Dr. A. Omololu, Director Food Science and Applied Nutrition Unit, (Ibadan, Nigeria: University of Ibadan).

[13]W. O. Jones, Manioc in Africa, (Stanford: Food Research Institute, 1959), pp. 195-199.

[14]Technical Report on Osegere Village Nutrition Survey, 1969. Supervised by Dr. A. Omololu, Director, Food Science and Applied Nutrition Unit, University of Ibadan, (Ibadan, Nigeria: University of Nigeria), pp. 50

Report of 1968 Certificate Course, op. cit., pp. 92, 94.

[15]Report of 1968 Certificate Course, op. cit., pp. 92-94.

[16]Technical Report on Osegere, op. cit.

[17]Uboma Study, op. cit., p. 63.

[18]Alan Berg, The Nutrition Factor: Its Role in Rational Development, (Washington, D.C.: The Brookings Institution, 1973), p. 48.

[19]Urban Consumer Surveys, Enugu, Federal Office of Statistics, (Lagos, Nigeria: Federal Office of Statistics, 1966), p. 25

Urban Consumer Surveys, Onitsha, Federal Office of Statistics, (Lagos, Nigeria: Federal Office of Statistics, 1967), p. 28.

[20]Ibid.

[21]Retail Prices and Consumer Price Indices for Selected Urban Centers for February 1973, Federal Office of Statistics, (Lagos, Nigeria: Federal Office of Statistics, 1973).

[22]S. O. Olayide, et al., A Quantitative Analysis of Food Requirements, Supplies and Demands in Nigeria 1968-1985, (Lagos, Nigeria: The Federal Department of Agriculture, 1972), p. 23. (In the remaining notes, this work is referred to as A Quantitative Analysis . . .)

[23]Retail Prices and Consumer Price Indices for Selected Urban Centers for March 1973, Federal Office of Statistics, (Lagos, Nigeria: Federal Office of Statistics, 1973), p. 10.

[24]V. A. Oyenuga, Nigeria's Foods and Feeding Stuffs, (Ibadan, Nigeria: Ibadan University Press, 1968), pp. 87-88.

[25]Retail Prices . . . March, 1973, op. cit., p. 10.

[26]Oyenuga, op. cit., Table 2, p. 14.

[27]W. O. Jones, Marketing Staple Food Crops in Tropical Nigeria, (Stanford: Stanford Food Research Institute, 1973).

[28]B. W. Hodder and V. I. Ukwu, Markets in West Africa, (Ibadan: Ibadan University Press, 1969).

[29]This includes the processing step of converting the raw cassava roots to fried or fermented cassava.

[30] W. O. Jones, Marketing . . ., op. cit., p. 97.

[31] Ibid.

[32] Ibid., p. 62.

[33] Ibid., p. 142

[34] A Quantitative Analysis . . ., op. cit., p. 59.

[35] Personal interview with Dr. Bede Okigbo, Director of Farming Systems, International Institute of Tropical Agriculture, June, 1973.

[36] D. G. Coursey, 'Cassava as Food: Toxicity and Technology' in Chronic Cassava Toxicity, (eds.) Barry Nestel and Reginald MacIntrye, (Ottawa Canada: International Development Research Centre, 1973), p. 31.

[37] W. O. Jones, Manioc . . ., op. cit., p. 215.

[38] There have been some analyses, such as reported in W. O. Jones, Manioc . . ., op. cit., of processed cassava products but these have been incomplete and do not lead to inferences.

[39] For an informative classification of systems of agriculture in tropical Africa, see George Benneh, "Systems of Agriculture in Tropical Africa," Economic Geography, (July 1972), pp. 244-257.

[40] Uboma Study, op. cit., p. 71.

[41] Rawal and Egunjobi, op. cit., p. 6.

[42] In this respect, the International Institute of Tropical Agriculture is embarking on a survey to systematically gain knowledge of farming practices in Nigeria.

[43] 1950, 8 million hectares; 1972, 27 million hectares. Rawal and Egunjobi, op. cit.

[44] 1959/60, 73 million hectares; 1969/70, 91 million hectares. A Quantitative Analysis . . ., op. cit., p. 61.

[45] Based upon data from Federal Office of Statistics, Rural Economic Survey RES/3/1972, p. 2.

[46] Since cassava is harvested and planted throughout the year, previous estimates of old cassava harvested underreported both the acreage and production. Recent estimates use the rule of thumb

that includes all old cassava (harvested during the year) and one-half of the new (plants remaining in the soil).

[47]This began occuring as far back as the early 1960's as reported by Jones in Manioc . . ., op. cit., p. 168.

[48]Uboma Study, op. cit., p. 77.

[49]Jones, Manioc . . ., op. cit., p. 183-184.

[50]An interview with IITA personnel uncovered the following reasons for underreporting:

(a) lacked age distribution of cassava in the field;
(b) lacked age distribution of harvested cassava;
(c) did not survey all cassava; only old cassava and proportion of new;
(d) lacked trained personnel in performing surveys.

[51]A Quantitative Analysis . . ., op. cit., p. 61.

[52]See D. G. Coursey, Yams: An Account of the Nature, Origins, Cultivation, and Utilization of the Useful Members of the Dioscoreaceae, (London: Longmans Publications, 1967).

[53]The Agricultural Economy of Nigeria, op. cit., p. 21.

[54]B. A. C. Enyi, "Yams in Africa," in Proceedings of the Second International Symposium on Tropical Root and Tuber Crops, (Hawaii: College of Tropical Agriculture, University of Hawaii, August 1970), Vol. I, p. 97.

[55]A Quantitative Analysis . . ., op. cit., p. 17.

[56]D. G. Coursey, Yams . . ., op. cit., pp. 180-181.

[57]W. O. Jones, Marketing . . ., op. cit., p. 79.

[58]D. G. Coursey and F. W. Martin, "The Past and Future of the Yams as Crop Plants," in Proceedings of the Second International Symposium on Tropical Root and Tuber Crops, (Hawaii: College of Tropical Agriculture, University of Hawaii, August 1970), Vol. 1, p. 88.

[59]Ibid.

[60]A Quantitative Analysis . . ., op. cit., p. 75.

[61]Warid A. Warid, "Production and Improvements of Edible Aroids in Africa," in Proceedings of the Second International Symposium

on Tropical Root and Tuber Crops, (Hawaii: College of Tropical Agriculture, University of Hawaii, August 1970), Vol. II, p. 39.

[62] Ibid., p. 39, citing D. G. Coursey, "The Edible Aroids," World Crops, 20, (4): 25-30.

[63] Ibid., p. 43.

[64] Donald L. Plucknett, "Colocasia, Xanthosoma, Alocasia, Cyrtosperma, and Amorphophallus," in Proceedings of the Second International Symposium on Tropical Root and Tuber Crops, (Hawaii: College of Tropical Agriculture, University of Hawaii, August 1970), Vol. 1, p. 131.

[65] This covering serves additional purposes such as mulching, fertilizing, and keeping the fowls away.

[66] Tannia, peeled 383 calories/100 grams; taro, peeled 376 calories/100 grams. Oyenuga, op. cit., Table 3, p. 17.

[67] Calculated from data in Table 9, A Quantitative Analysis . . ., op. cit., pp. 20-21.

[68] Harry W. VonLoesecke, Bananas, (New York: Interscience Publishers, Inc., 1950), p. 128.

[69] A Quantitative Analysis . . ., op. cit., p. 57.

[70] Calculated from data in Table 39, A Quantitative Analysis . . ., op. cit., p. 57.

[71] Ibid. Other reports vary in their data from these average figures. From the Digest of Agricultural Statistics 1970, published by the Nigerian Ministry of Economic Planning and Reconstruction, maize yields in the Western State were listed at 2824 lbs/acre and 1134 lbs/acre in 1968/69 and 1969/70 respectively. The Uboma Study, in the East Central State, showed 425 lbs/acre on the average.

[72] W. O. Jones, Marketing . . ., op. cit., p. 78.

[73] Oyenuga, op. cit., p. 43.

[74] Calculated from data in Table 38, A Quantitative Analysis . . ., op. cit., p. 79.

[75] Uboma Study, op. cit., p. 107.

[76] W. O. Jones, Marketing . . ., op. cit., p. 91.

[77] Ibid., p. 119.

[78] Oyenuga, op. cit., p. 50.

[79] W. O. Jones, Marketing . . ., op. cit., p. 49.

[80] Gross average calculation from data in I. S. Dema's Nutrition in Relation to Agricultural Production, (Rome: FAO, 1965), p. 86.

[81] A Quantitative Analysis . . ., op. cit., Table 28, p. 59.

[82] Ibid., calculated from data on p. 76.

[83] Ibid., p. 78.

[84] Ibid., p. 17.

[85] Hodder and Ukwu, op. cit., p. 105.

[86] Dema, op. cit., p. 25.

[87] W. O. Jones, Marketing . . ., op. cit., p. 63.

[88] Oyenuga, op. cit., p. 80.

[89] A Quantitative Analysis . . ., op. cit., p. 63.

[90] The Agricultural Economy of Nigeria, op. cit., p. 16.

[91] Ibid., p. 15.

[92] Ibid.

[93] Oyenuga, op. cit., p. 77.

[94] Africa, South of the Sahara, op. cit., p. 627.

[95] The Agricultural Economy of Nigeria, op. cit., p. 15.

[96] A Quantitative Analysis . . ., op. cit., p. 60.

[97] Ibid.

[98] The Uboma Study reported on presses made in Umuahia, East Central State, that were a screw-type cage variety and priced at ₦40 in 1964. The estimated total annual income per family in Uboma was ₦156 in 1964. Uboma Study, op. cit., p. 94.

[99] Uboma Study, op. cit., p. 56.

[100] Dema, op. cit., p. 64.

[101] Ibid., p. 63.

[102] Oyenuga, op. cit., p. 88.

[103] A Quantitative Analysis . . ., op. cit., p. 59.

[104] Oyenuga, op. cit., p. 88.

[105] Ibid.

[106] Ibid., p. 61.

[107] Ibid., p. 26.

[108] Ibid., p. 62.

[109] Ibid.

[110] Ibid, p. 35.

[111] To be referred to in the discussion as fruits.

[112] Oyenuga, op. cit., p. 15.

[113] Uboma Study, op. cit., p. 54.

[114] A Quantitative Analysis . . ., op. cit., p. 107.

[115] Report on 1968 Certificate Course, op. cit., p. 120.
Technical Report on Osegere, op. cit., p. 14.

[116] Calculated from data on p. 14, Technical Report on Osegere, op. cit.

[117] Although Figure 4 shows the seasonal price movements of beans, the reason for presenting the values on a time series basis is to remove the possibility of drawing conclusions from single-time point data.

[118] Dema , op. cit., p. 61.

[119] Uboma Study, op. cit., p. 54.

[120] A Quantitative Analysis . . ., op. cit., p. 107.

[121] Uboma Study showed 30 grams; Uboma study, op. cit., p. 54. I. S. Dema's study showed a variation between 4 and 17 grams. Dema, op. cit., p. 61.

[122] A Quantitative Analysis . . ., op. cit., p. 107.

[123] Republic of Nigeria Nutrition Survey, February-April, 1965. A Report by the Nutrition Section, Office of International Research, National Institutes of Health, U.S. Department of Health, Education and Welfare, March 1967, p. 33.

CHAPTER IV

SPECIAL CASE OF A SYSTEMS APPROACH/NUTRIENT CONVERSION AND TRANSFER ANALYSIS METHODS

Systems Concept -- Nutrient Conversion and Transfer Methods

The systems concept is disarmingly simple, yet when applied can be a rigorous methodology. In fact, a suitable definition for the concept might be a rigorous commentary on the obvious. As systems methods are applied, one is, of course, looking at a complex and sometimes alien social and technical process. Always the questions must be asked:

(1) What part of the system are we observing?

(2) How does it function?

(3) How does it link to other elements?

(4) How can its structure be altered to perform better?

(5) How can the internal feedback mechanism be made more effective so the system is more self corrective?

Many times in studying a food system that is as complex as a cassava dependent community, there will appear to be disfunctional activity. Often it is lack of understanding of the system that yields this doubt.

For food/nutrition systems in general, and specifically for the cassava dependent food/nutrition system in Southern Nigeria, the descriptive methodology which we employ is called nutrient conversion and transfer analysis. Through this method three general sets of

of processes are identified for any system. These are the process of nutrient conversion functions, nutrient transfer functions and the activities of institutions whose purpose it is to monitor these functions either to coninue them, to change them, or to adopt new functions.

The general method of analysis is the 'walk through' of the food/nutrition system, starting with a group of final consumers in a given area and tracing back through all the steps in which nutrients are combined or altered and through all the steps in which they are transferred. Then, at each step the production functions, both conversion and transfer, are identified and linked.

In the most rigorous case one begins with the specific preparations of the final foods that are eaten in consuming units in a given area. These preparations are then classified into some general set of food preparations. The classification should not be so general that changes in the preparation process in any given set of units cannot be seen, especially if it is possible that the change will indicate a trend in new preparations. This will also assure against the loss of new means of doing an old thing which is the basis of change and possibly the beginning of a trend. In either case, these altered methods should be included.

Beginning with an analysis of the conversion function which produced the end consumer product, we trace each input material to these final products back to the initial nutrient conversion function. It must be realized that there will be many variations--

some of these are catalogued for study, others are bypassed. The level of detail is based upon the knowledge requirements of the decision makers/planners, and what they wish to do with the information.

Nutrient conversion functions are defined as: any set of processes which alters, deliberately or accidently, the nutrient contents of a carrier (food stuff). The nutrient contents are measured qualitatively as well as quantitatively although changes in the physical amount of the material with the same nutrient content are not considered to be nutrient conversion functions. The following processes are nutrient conversion functions: the process of drying, the process of accidently introducing foreign matter such as dirt, worms or micro-organisms, and the mixing of food stuffs such as in the home preparation of soups (stews). The processes of storage and packaging are not nutrient conversion functions but are transfer functions.

These nutrient conversion functions are described by having a set of inputs, a set of outputs and an actual conversion function expressing the combination of inputs to achieve a set of outputs. The method must be capable of identifying all the outputs including, if necessary, those which would be considered waste products. Again, all inputs must be considered no matter how insignificant they may appear if the level of analysis calls for it.

The nutrient conversion functions are measured in terms of capital equipment used, the amount and type of labor used, the land

used and the degree of organization needed and how this organization was developed (and how the training for the process is developed). The interaction of the process in terms of time must be understood. It might also be necessary to further break down the aggregated functions into smaller functions if it is thought that there is a critical function which is a key to the otherwise aggregated processes.

The nutrient transfer functions have two components: the transfer of the physical outputs from one nutrient conversion function to the next nutrient conversion function and all of the attendant non-nutrient changes that the outputs may undergo. These will include physical movement (transportation), communications, bulking, breaking, repackaging, transfer of ownership, storage, etc. Involved in each step is the value that appears to be added and the attendant risk taken in doing each step for the probable increase in value. Furthermore, there is also the flow of the transfer of information concerning the set of nutrient conversion/nutrient transfer steps that might be known to the personnel who are carrying out various of these nutrient transfer steps. This information is of specific importance concerning the amount of outputs to be expected from any specific set of nutrient conversion functions in a given time and the flow through the nutrient transfer steps and the expected value to be returned through these steps. The flow of this information is important for the coordination of the amount of material that flows through the system.

Building the Descriptive Flow Model in a Cassava Dependent Culture

A cassava dependent environment is defined as a geopolitical area where the production, distribution and consumption of cassava are dominant activities for a significant portion of the indigenous population.[1] In addition, the area usually is bounded by political constraints within which decisions are made that affect these activities. These decisions can be viewed as being at two extremes, which, although distinguishable, are intimately related.

The first type of decision is that which is made by those directly dependent on cassava--members of the population who depend on the plant for its economic or nutritional values, or both. These are the farmers, the traders, and the urban and rural consumers who make the decisions to plant, harvest, process, store, transport, sell, buy, and eat the root crop. While characteristics such as planting techniques, processing methods, and eating habits vary between individuals or regional and traditional groups, cassava is a facet of everyday life.

The second type of decision is made by those who are not necessarily dependent on cassava but whose responsibility and authority are connected to the process in some administrative way. Decisions to attempt to improve the varieties planted, to research the ways to fortify with proteins, and to study alternative production strategies for livestock feeding are all examples of this second type. An example of those who make these decisions are government officials who control and allocate public resources.

An overview suggests a pyramid of decisions, goals, strategies, and tactics which govern them, from the individual level to the societal. Figure 1 illustrates this.

In order to make effective decisions on the societal level, it is necessary to better understand those decisions on the individual level. Yet this individual type of decision is only a part of an entire system whose structure determines and is determined by these decisions. Within the system, these types of decisions are related, being either directly or indirectly functions of one another. That is to say that decisions to harvest are affected by decisions to trade which are affected by decisions to eat.

To describe the cassava dependent environment it is first assumed that a system exists in which foods play a fundamental role. An ecological approach implies that it is necessary to identify and analyze the relationships within the system, the boundaries between the system and its external environment, and the interdependencies of the internal functions of the system with the functions outside the system. For example, with this approach it is discovered that farmers withhold produce in a given period because retail prices are expected to decline in a future period. It is this type of relationship that governs the quantity of food that flows within the system.

It is also necessary to determine and understand how, when, where and why the food is altered as it passes through the system. When food changes its form, its quality or its value, it is operated

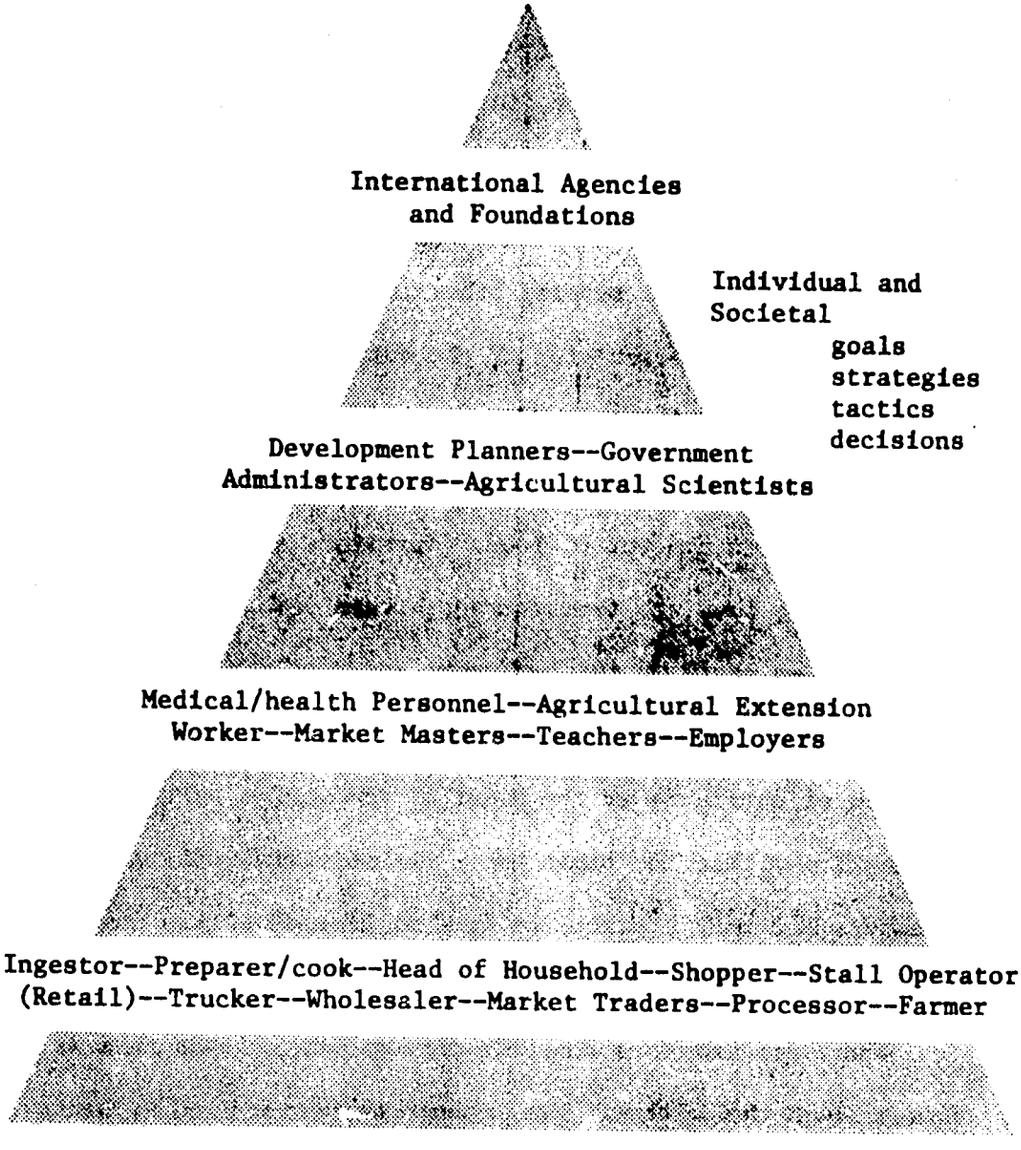

FIGURE 1

IDENTIFICATION OF DECISION-MAKERS IN THE CASSAVA DEPENDENT ENVIRONMENT

on within some production function of the system. To study these changes, we analyze the production function as well as the changes that it produces. For example, a crop might enter a processing mill with a price, in a specific quantity, sent via some means of transportation, and grown in a particular region. Going through the mill then changes the form, price, and quantity of the crop as well as several other characteristics to the extent that perhaps every descriptor of the output is different than those used for the input.

The resulting information converges by employing the nutrient carrier concept of food. Nurtients are converted by the producer; they are transferred, broken down, added to, and recombined en route to the consumer; and then again they are altered and combined by the consumer. From the initial combination of nutrients at the point of production to their ultimate destination within the human body, the nutrients undergo numerous transfers and modifications as food is altered within and travels between the various production functions of the system.

There are numerous channels through which foods pass as they flow through the system. Throughout the system food is being altered and its ownership or control is being transferred. These points of transfer or change react with each other through various factors which need to be identified.

Figure 2 is an example of what might be called a classical view of one of the representative pathways through the system.

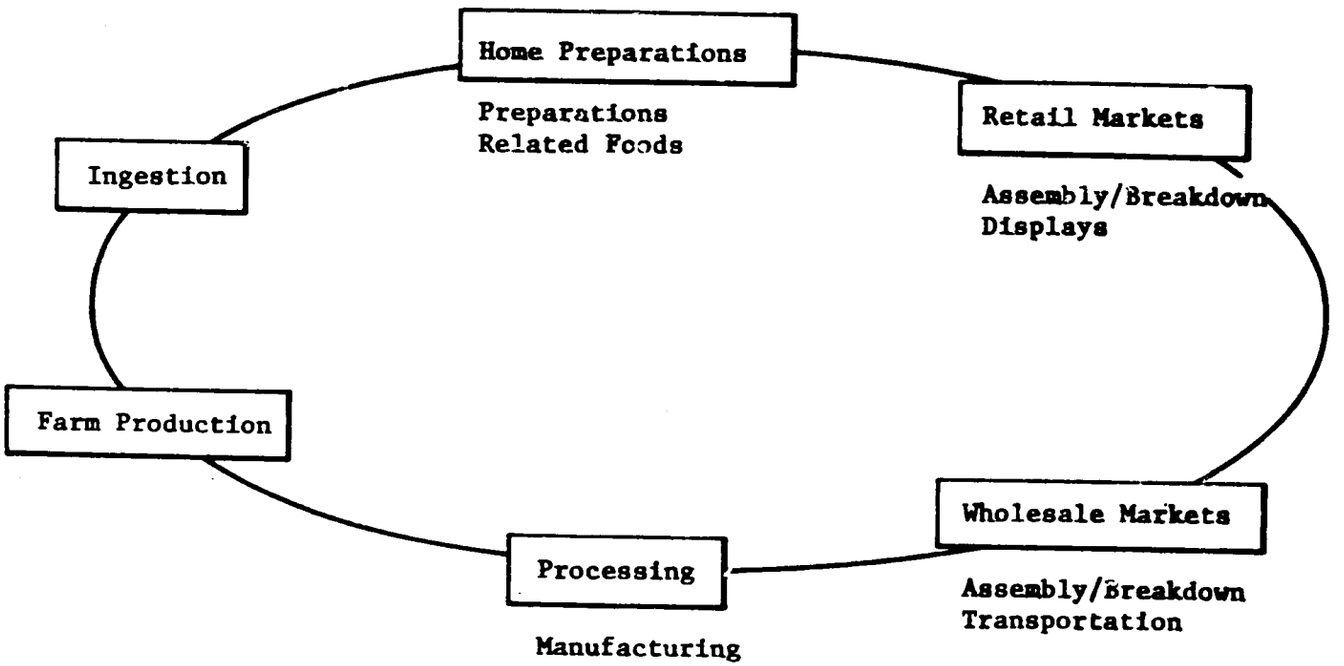

FIGURE 2

EXAMPLE OF A PATHWAY OF CASSAVA PRODUCTS AND CASSAVA-RELATED PRODUCTS

It is a necessary description of the system since it provides guidelines for making initial observations. However, it is only preliminary because it does not allow enough disaggregation in either the specific production functions or the decision processes that govern the control of the functions.

Once several of these representative pathways are sketched within the system, information can be added on a more detailed basis concerning the relationships of decision and control. Figure 3 represents those factors which are involved in investigating the consumer's activities within the system. The two principal roles which are developed are that of the consumer and that of the foods which they purchase and prepare. Consumer characteristics are divided into external functions commonly referred to as consumer behavior which deals with the acquisition of food and internal functions which are defined as eating behavior; these latter functions primarily deal with food preparations. Using this division, it is possible to investigate the variables that influence both consumer and eating behavior. Examples of the consumer-related variables are wealth, family size, traditions and appetites.

Food itself is also described by a multidimensional set of characteristics. Figure 4 presents a general outline of several descriptors which make up the food complex. Food might be processed; it might be tropical; it might be expensive. To link food to the consumer subject to nutritional criteria, the relation between consumers and food must be traced to gain an understanding of the

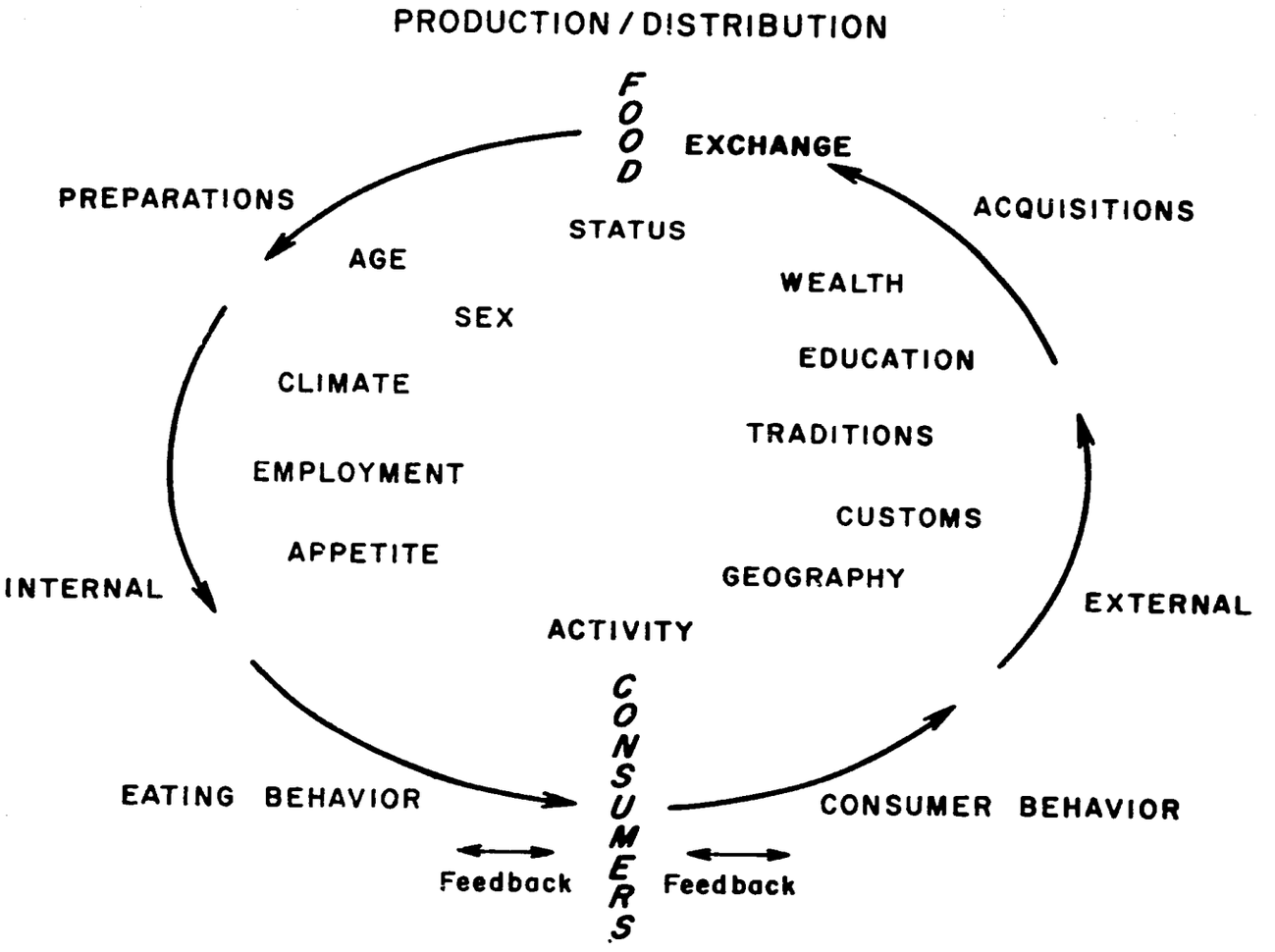

FIGURE 3

SCHEMATIC REPRESENTATION OF CONSUMER-FOOD RELATIONSHIPS

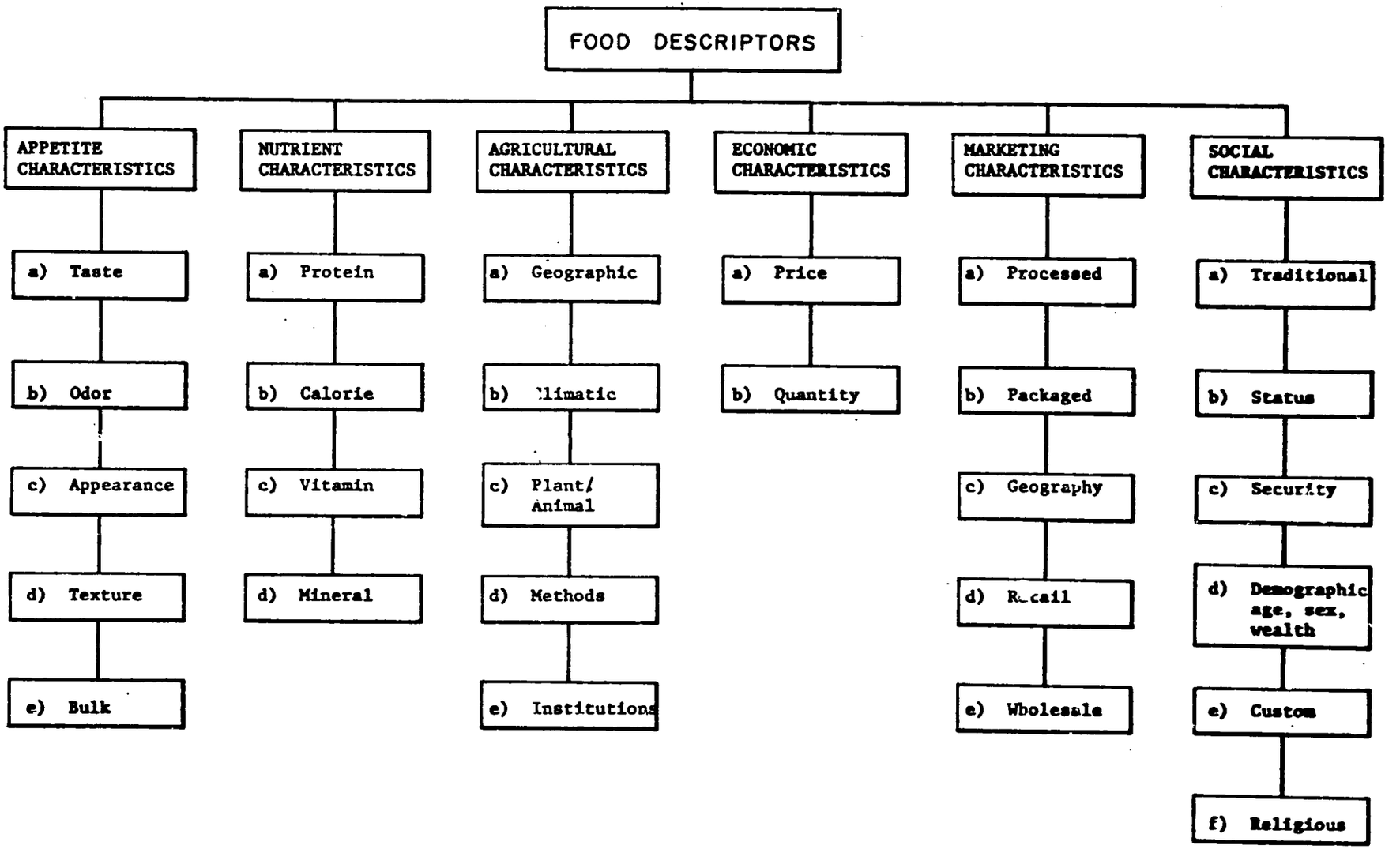

FIGURE 4

GENERAL OUTLINE OF DESCRIPTORS COMPRISING THE FOOD COMPLEX

relative importance of the different characteristics. This shows the location of inefficiencies, identifies where further research might prove beneficial in terms of payoffs to the entire system, and determines possible intervention points of high return and low resistance. The resulting intergration provides a structure in which to later simulate the ramifications of resource allocations as they influence the entire community.

As cassava and its complements are traced back from the consumer, the system is distinctly charactertized by transfer processes. It is necessary to gain information concerning the decisions that determine such factors as ownership of the products and control over prices and flows. These decisions are what create the production functions in each of the transfer processes; in turn, these functions describe the types and quantities of inputs that yield the outputs.

Cassava and its related foods move through a variety of transfer processes between the farm and the consumer. The middlemen, as they are called in marketing textbooks but whose name should probably be 'middlewomen' given the predominance of females engaged in these activities in West African countries, are all providing some amount of place and time utility to the foods. Often, as is the case with cassava, there occurs an actual physical transformation of the product between two transfer processes. In this methodology, it is this transformation as a nutrient conversion function that is examined. However, the same owner could be involved in the transfer

as well as the conversion. Thus, a middleman could also provide an additional utility of form--a form of the food demanded by the consumer.

In each of the transfer processes, the concern is with a description of the process itself. As the processes are described, an attempt is made to discover which operations lend themselves to techniques that might encourage greater efficiency. For example, when foods are transported, they are usually packaged (even the most crude wrappings are packaging materials) and stored prior to resale. These functions involve some outlay of capital for materials and handling. If some type of improvement could be introduced that would extend the life of the food, by reducing spoilage, the savings could be passed on to the consumer through lower prices. This could allow more food to be purchased without increasing expenses. Hence, there would be a potential for increasing nutritional benefits.

There are many transfer functions that are described for their linkage characteristics within the food system. In addition to packaging and storage, the activities of repurchasing, assembly into larger packages, breakdown into smaller packages, transportation, ownership contracts, credit, risk assessment, establishing standards (formal and informal) and transfer of information influence the values of the foods as well as the costs that are incurred in the activities.

Just as an attempt is made to identify the differences between urban and rural consumers, a distinction is made between transfer functions performed in urban and rural communities. Because of

the potential differences in social and economic factors, the capacity to change is markedly difficult in some processes resulting in bottlenecks for improving efficiency. Furthermore, where transfer activities are deeply integrated into the lifestyles of the people, as is the tendency in rural areas, care must be taken to understand not only the physical processes but the less visible relationships which present organizational barriers to the acceptance of changes. Drawing on Slater's previous work in studies of food marketing in Latin America[2] a list of questions to gain the needed information can be drawn up.

1. What is the present organization of market activities?
2. What trends exist that show changes in the transfer functions and what are the characteristics of those who adopt new techniques?
3. What means of communications are utilized to spread information between transfer processes and to and from producers and consumers?
4. How are the benefits of changes in marketing distributed among producers and consumers?
5. What are the barriers to the introduction of future changes in the transfer processes?
6. What can be done to improve the performance of extant transfer activities?
7. How do external decision makers (government administrators, institutions) influence the transfer production functions?

By answering these questions, it would be possible to construct an overall framework for the transfer functions thus enabling a better understanding of the decisions involved. This would permit the identification of potential intervention points, and in fact, suggest possible intervention projects.

An important nutrient conversion function usually occurs between transfer processes. These functions are distinguished from similar or even identical ones that are used for home consumption. Ordinarily referred to as processing, these functions occur in mills where cassava is being ground into a flour; they occur in villages where the roots are peeled and afterward pressed. Since each of the activities considered allows for the entrance of foreign matter into the product, or potentially alters the nutrient content of the product, we have treated them as nutrient conversion functions. If it should later be discovered that no nutrient changes have taken place, for instance when only form is altered, then the processes would be treated as nutrient transfers.

The literature suggests two main reasons for processing cassava: both have to do with making the root edible. The first reason is to soften the root so that it is easily palatable. The need to eliminate or reduce the toxic HCN content is cited as the second reason.[3]

Because these types of processes are potential access points within the food system for the physical addition of nutrients

(fortificants introduced into bread making), we have tried to identify not only the current characteristics of the functions but also some patterns of change in the functions over time. This ascertains indigenous modifications which reveal pressures that might have instigated these changes and attitudes toward the acceptance of these changes.

Similar to the information interests in the previously mentioned functions, the decisions that control processing activities, the methods utilized, the capital required, the material, labor and costs involved, the standards used, and the purchase and resale practices involving credit, contracts and transfer of ownership are also of concern.

Finally, the cassava products and their related foods are traced back to the points of original production. The analysis thus enters the domain where nutrient conversion functions begin in such physical locations as the rural farms, the urban plots, and the rivers and streams for aquatic products. In comparison with those crops that have entered the Green Revolution, root crops in general and particularly cassava have undergone relatively little research. Consequently, at least from a systems viewpoint, there is much to be learned in examining the agricultural practices within a cassava dependent environment.

As in most subsistence or near-subsistence societies, the majority of the population is engaged in farming activities. Much of what is produced is for home consumption within the same family.

Thus a large proportion of the food that is produced does not enter the transfer processes, at least for resale away from the farm. It is therefore possible to observe on a micro scale many of the nutrient conversion functions, and nutrient transfer functions carried on within a single rural household.

Most of the interventions into developing societies have taken place in the agricultural sector with the intent of increasing productivity and farm income. As these results relate to nutritional improvements, we are interested in gaining knowledge of both the results and the processes leading to the results. Those factors which convert the germplasm into a food crop must be determined for their effects on efficiency; for the barriers they present to change, and for their openess to interventions which could promote modernization and nutritional betterment.

There are many problems currently being investigated in the agriculture of cassava. Two international institutions, in particular, the International Institute of Tropical Agriculture (IITA) and the Centro de Investigaciones de Agricultura Tropicales (CIAT) are performing important work in breeding programs, in farming practices studies, and in other areas in attempting to increase production and productivity. As this work is integrated into the systems study, it is likely that many more suggestions for intervention programs will emerge. Some will accelerate processes that are already underway; others will introduce altogether new ones.

CHAPTER IV - NOTES

[1]In general, in order for there to be dependency on a foodstuff, the following criteria must be met:

(1) An acceptable substitute is not economically (cannot be) available to the consuming unit within a time period during which they will not suffer severe nutritional/hunger problems.

(2) If there is a feasible economic substitute, the use characteristics of the consuming unit based on knowledge of preparation or some other critical factors will not permit the use of the alternative during a given time period in which severe nutritional/hunger problems will occur. Thus, for a set of reasons, if a specific foodstuff should not be available, a situation dangerous to the consuming unit will ensue.

[2]Charles C. Slater, et al., Food Marketing in the Economic Development of Puerto Rico, Research Report No. 4, Latin American Studies Center, (East Lansing: Michigan State University, 1970).

[3]D. G. Coursey, "Cassava as Food: Toxicity and Technology," in Chronic Cassava Toxicity, eds. Barry Nestle and Reginald MacIntyre, Proceedings of an interdisciplinary workshop held in London, January 29-30, 1973, sponsored by the International Development Research Centre, Ottawa, Canada.

CHAPTER V

APPLICATION OF THE ANALYSIS ON A COMMUNITY LEVEL ---- A SYSTEMS EXPLORATION

Introduction

Our time in the field was spent identifying the foods that flow through a cassava dependent environment, tracing the flows to discover the network of channels that structures the production, distribution, and consumption of the foods, and investigating the decision points that govern the conversion and transfer processes that convert and transport the foods throughout the system. By starting with the consuming units, families in both rural and urban settings, we were able to observe a large number of food products that are combined in the diets. We were also able to examine several home preparations of foods that provided information on the final conversion techniques prior to eating. These conversion methods are valuable in determining the relative importance of foods regarding quantities consumed as well as how the preparations affect the quality of the food to be eaten. Further, we explored some of the consumption habits such as numbers of meals eaten daily, the hierarchy of consumption (who eats first and what), and how the decisions are made regarding these habits.

From these consuming units we then traced several of the food items, both cassava products and cassava related products, back through the system to the initial points of production. Thus, a

cassava product such as amala lafun was followed from the consumer back through the several transfers which it undergoes after it is processed and then eventually back to the farm where the roots are grown. Similarly, fish products were inchoately traced from the points where they are ingredients in soups back through the various channels via transfers to the points where the fish are dried or smoked and then to the fishermen who pull them from the water.

The procedures that we employed in performing these traces through the system are based upon the concepts presented in Chapter IV of this report. In order to illustrate the application of our procedures, we will first present a superficial view of activities in the Nigerian food system. By using a narrative "walk through" description, we provide an example of the raw material for our analyses. Next, we perform an analysis of this description, making references to potential intervention programs which could be pursued in the short term future. Finally, we present a preliminary analysis of several cassava related products.

Narrative "Walk Through"

The following presentation attempts to share with the reader some of our observations during field work. Due to the large number of variations in the system, we chose to condense the important findings into a description that might be referred to as "quasi-documentary." Thus, while the narrative is factual in content, many of our observations were combined and associated with a

representation of how consumers, retailers, wholesalers, processors, and farmers appear. While names of families are fictitious, the narrative provides a non-fictitious account of a trace through the system which can then be analyzed.

The Consumer

We are guests in the apartment of Mr. and Mrs. Kolawole. The apartment is located off a dirt street in a densely populated neighborhood near the middle of Ibadan, the largest city in Nigeria. Mr. and Mrs. Kolawole are 33 years old and 27 years old respectively. They have four children ranging in age from 2 years to 9 years. Mrs. Kolawole is about four months pregnant. The inside of the apartment is sparsely furnished but neat. There is a noticeable odor of charcoal which is used in cooking the family meals.

Mr. Kolawole is a laborer for a small local factory. He earns 40 Naira each month (approximately $60 U.S. dollars). This is supplemented by a little more income earned by the oldest son who works part time in the big market carrying produce for the merchants. Mr. Kolawole would prefer that his son spent more time with his school books but the extra money helps a bit, especially with another child coming.

The income of the Kolawole family is spent cautiously. Most of it goes for food. Figure 1 shows a breakdown by expense category.

An additional payment Mr. Kolawole has to make is for a loan which he continues to increase and decrease at irregular

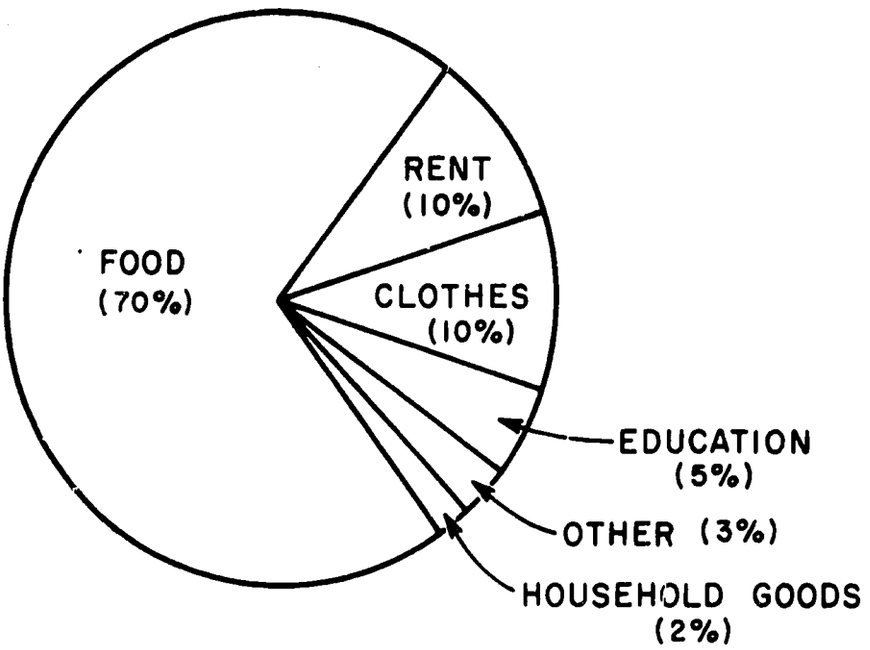

FIGURE 1

DISTRIBUTION OF FAMILY EXPENSES

intervals. The loan is from a relative and the principle fluctuates depending upon Mr. Kolawole's needs and repayment schedule. Thus, Mr. Kolawole is a constant debtor.

Mrs. Kolawole cooks the meals for the family. She has a charcoal burning stove which is used daily and a cold water tap. Of most prominence amongst her utensils is a large metal pot which she uses to fix a soup (stew) which is freshly made about twice a week. This soup pot is the meager cornucopia of their kitchen for out of it comes the peppery hot sauce-like mixture which gives flavor to their major household staple -- cassava, eaten about 1½ times a day on the average.

The classification of Mrs. Kolawole's soup is made by the ingredient which gives it is distinctive taste, such as egusi (melon seed) or okro (okra). Other ingredients include onions, tomatoes, palm oil, bitter and water leaf, and a healthy amount of ground pepper. The soup ingredients vary; the quantity and quality of its composition is almost a direct function of family income and wealth. As her budget allows, she will add small quantities of meats such as fresh beef, mutton, chicken and dried fish. Some of the different soup types that are observed are listed in Table 1. It should be noted that Mrs. Kolawole expects the soups to provide nutrients that cassava products lack, namely proteins and vitamins. The steamy, bubbly brews cook for several hours when they are first made. Mrs. Kolawole then reheats them often for the next few days.

TABLE I

SOME DIFFERENT SOUP TYPES IN THE NIGERIAN DIET*

Vegetable Soup:	Okra Soup:
Bitter leaf	Okra
Water leaf	Peppers
Red palm oil	Meat or shrimp
Onions	Red palm oil
Peppers	
Tomatoes	
Melon Seed Soup:	**Offal Soup:**
Melon seeds	Offals
Bitter leaf	Peppers
Water leaf	Onions
Dry fish or shrimp or meat	Red Palm oil
Red palm oil	
Peppers	
Onions	
Tomatoes	

* Although these are the basic ingredients that we observed, many other variations are known to exist.

Mr. Kolawole says he prefers pounded yams to cassava but does not expect to eat it as much as cassava products since yam prices have been very high lately. On the other hand, Mrs. Kolawole's preparations of gari fu-fu (a starchy, mashed potato-like preparation made from fried cassava meal) and amala lafun (cassava flour) will provide him with much energy and satisfy his hunger at a low cost. It is the same way for the children.

The recipes Mrs. Kolawole uses for fixing gari and amala lafun are typical. Into a fairly large clay pot she combines one or the other cassava product with hot water and stirs until the mixture is of a smooth consistency. She then spoons a portion of it onto a large leaf and folds over the corners. The leaf, which is not eaten, functions as a plate and also keeps the cassava warm. Served with the soup, the cassava preparation usually constitutes the main meal of the day.

When Mrs. Kolawole is not cooking, she most likely will be found in the market. In addition to being the place where she can share local gossip with her friends, the market is where Mrs. Kolawole buys most of her groceries. Although there is a small shop near her house where she sometimes buys canned tomatoes and soap, and Mr. Kolawole purchases his cigarettes, they do not stock fresh vegetables. There is also a modern supermarket on her way to the open market, but she knows she cannot afford to pay the high prices, even though she admires its neat and clean atmosphere.

The open market carries just about everything. While

noise and congestion constantly hover over the mud walks, Mrs. Kolawole feels secure in her knowledge of the type of exchange she will engage in. She has a fairly good idea of what she will receive in exchange for her kobos.

The Retailer

Mrs. Adekanbi is the market lady from whom Mrs. Kolawole usually buys her amala lafun. Mrs. Adekanbi has been renting her stall for the past two years, and is located among another dozen or so small retailers who also sell cassava products. The stall is modest in size, about six feet square, but it meets Mrs. Adekanbi's needs. The rent is low and a roof provides shelter from the rain.

In the center of the opening to the stall one always finds two basins supported by a large wooden box which was previously used as a shipping crate. In the basins, piled about two feet high in pyramid fashion are two large white mounds of cassava flour. Mrs. Adekanbi is often seen preening the mounds, removing any visible blemish with her fingers and filling in any dents that have resulted from a sale by scooping from the bottom to the top of the mound in sandpile fashion. Throughout the day Mrs. Adekanbi sells her cassava flour primarily in small quantities. For ten kobo, a customer will receive a varying number of tobacco cups filled to the brim or over with flour. At this price, haggling does not take place since the amount of exchange is relatively small. However, for her regular customers, Mrs. Adekanbi adds a dash more flour with each

purchase. She does nothing more to promote her product except to make sure that her stall and its environs are relatively clean.

When the mounds decline in size sufficiently to be noticeable, Mrs. Adekanbi goes to the back of her stall to replenish the basins from several large jute bags which sit on the ground. She turns over about two bags each week but occasionally may unload a third bag if she is fortunate.

To acquire the jute bags and their contents, Mrs. Adekanbi travels once a week to a small town about 50 miles away. This is a feeder market which attracts many small wholesalers who bulk and break agricultural produce, some of which has already been processed. The cassava that Mrs. Adekanbi purchases is an example of a semi-finished product which she acquires in the feeder market and which must be further processed before she sells it from her stall.

Mrs. Adekanbi travels to this market by lorry. The ride takes about three hours due to the many stops the driver makes to loan and unload passengers along the way. This method of travel is uncomfortable due to the crowding of the vehicle but the fare is reasonable. However, she knows that she can look forward to spending the night at the house of some friends, where she will sleep, have a meal and be able to chat about the weeks activities.

The following morning she goes to the market to buy enough cassava chips for the coming week. Recently she has been able to receive the best prices from a particular wholesaler whose chips have been of consistent high quality. Routinely, she samples some

chips by observation and by taste, and then bargains for an amount that will fill jute bags. After she makes her purchase she hires carriers with a cart to haul the heavy bags to the lorry station from where she will make the journey home.

Since the chips are to be finely ground into flour before she offers them for resale, she stops at a small nearby mill after her return. A small, gasoline motor driven machine, the mill is owned and operated by one man who has been grinding flour for Mrs. Adekanbi for as long as she has been in business. As she arrives in the late afternoon, she generally will not have to wait long as most business occurs in the morning. After paying a fixed price for each bag, she has them carted off to her stall where she and her cousin, who she has left in charge while she was gone, will remain for an hour or so, talking and doing business with any late customers before they go.

Since Mrs. Adekanbi must stay most of the time in the market, she often buys her meals during the course of a market day. Usually she must also feed her children in the same manner. As in home preparations, vendors serve cassava products such as gari with other foods. Many of these other foods have a grain legume base that makes them an inexpensive protein supplier. Table 2 presents several of these dishes that are prepared by vendors; the list of contents is based on a report from the Food Science and Applied Nutrition Unit, University of Ibadan.

TABLE 2

SEVERAL GRAIN LEGUME BASED RECIPES OF FOODS PREPARED AND SOLD BY VENDORS IN MARKETS

AKARA*	ADALU	ALAPA	MOINMOIN
Dry Beans	Dry Beans	Dry Beans	Dry Beans
Onions	Dry Maize	Melon Seeds	Peppers
Peppers	Peppers	Peppers	Red Palm Oil
Red Palm Oil	Onions	Onions	Onions
Salt	Red Palm Oil	Salt	Salt
	Salt		

* These are Yoruba names for the preparations.

The Wholesaler

The merchant from whom Mrs. Adekanbi purchases the cassava chips is a 48 year old wholesaler named Mr. Sobiro. With his three sons he manages to operate a successful small business which earns about 600 Naira a year for his family. Since prices have been known to vary as much as 25% from the yearly average, Mr. Sobiro tries to keep informed about such things as farmers' crop production and the conditions of his customers retail sales. All of this information is discovered by word of mouth when he engages in buying and selling.

Dealing exclusively in cassava chips, Mr. Sobiro acquires his merchandise in three distinct ways; from market ladies who head-load small quantities of chips to town, from periodic rural markets, and by travelling to rural villages and buying from the families of small farmers. Mr. Sobiro prefers this latter method since it allows him to frequently return to farming communities similar to the one he knew as a young boy. He also has an advantage in bargaining on the farm since there is not as much pressure from competition as there is in the town market.

Mr. Sobiro's store in the market holds about 30 jute bags of cassava chips. While he occasionally will retail some of his product, he generally sells in larger quantities to various retailers and other wholesalers. During these latter types of transactions, his skills as a merchant are thoroughly tested. Often he and his customer are as much as 100% apart on the first price offer and the bargaining that ensues is intensive and lengthy.

On an average day, Mr. Sobiro sells between five and seven bags of cassava chips. In order to keep up with this demand, he commissions agents to go to forestalling locations where they can gain a small price advantage over the market exchange rate. Here, his agents concentrate on high quality merchandise and are able to persuade women carrying their baskets to sell prior to arriving at the market. By offering a slightly lower price than what exists in the market, they save Mr. Sobiro some money and provide him with good products while offering the seller an early transaction.

Mr. Sobiro realizes approximately a 5% profit margin from all his transactions. His expenses are agents' fees, salaries to his sons, transport costs, the store, rent and taxes. His biggest problem is trying to have enough cash on hand to cover purchase costs on a daily basis. This, Mr. Sobiro feels, is becoming increasingly more difficult due to rising prices.

The Processor

When Mr. Sobiro travels to one of the rural villages seeking to buy cassava chips, he often stops at the home of the Ajani family. The two wives of Mr. Ajani are essentially processors and traders. They buy a proportion of Mr. Ajani's crops, process them, and resell the products both to buyers who come to the village and at the local markets. They do not rely exclusively on the cassava roots from their husband's farm, but supplement their raw material input by purchasing roots from other

nearby farms. Their processed products are considered by many to be of superior quality in comparison to the products from other areas.

Processing the cassava into chips is one of the most important sources of income for the two wives. The money they earn from their efforts is not distributed among the entire family. It belongs to each woman and is allocated according to her desires and the needs of her children.

The two women process the cassava roots in the time consuming traditional manner which they learned from their mothers. After peeling the roots by hand, they cut them into small sections and place them into metal containers and clay pots filled with water. To the water and cassava combination, a few stems and leaves of a local plant are added and the entire mixture is allowed to ferment for several days. When this stage has been completed, the liquid is drained and the remaining cassava is grated and spread onto concrete or mats which are placed on the ground. With occasional turning and shuffling, the irregularly shaped chips will dry in a day or so. During the drying stage the women and children will clean and remove as much of the course fibre as possible since the absence of this fibre will bring a better sales price. After drying, the chips are assembled into baskets to await sales.

This whole process is done at a distance from the house because of the strong odor caused by fermentation. Since the mats

cannot be guarded every hour of the day, chickens and other small animals will sometimes get into the drying cassava and this necessitates further cleaning. Thus a great deal of effort goes into the preparation of the chips which the women will offer for sale at profit margins rarely exceeding a few percent of their asking price.

The Producer

Mr. Ajani is a smallholder who owns approximately five acres of land; of the five acres, 2 acres are under cultivation while 3 acres are under fallow. The land, which was passed on to Mr. Ajani by his father, is the source of most of the family income. Mr. Ajani knows his farm well having been born and raised in the same community.

Approximately a half acre of the land under cultivation surrounds the house and includes a few oil palm trees and plantains in addition to several vegetables such as beans, tomatoes, onions, leafy vegetables and peppers and the root and tuber crops of cassava and yam. This land, then, is essentially the household garden and is replanted annually.

The remainder of the land under cultivation lies about 300 meters from Mr. Ajani's home. Experience has shown him how to intercrop maize, cassava, yams, beans and melons so that he can use this land to its fullest capacity. The earth is mounded to aid drainage and to concentrate the fertile soil. This practice also

takes place on the compound land but is less necessary there due to the incorporation of household waste as a garden fertilizer. Mr. Ajani does not use fertilizer on this more distant land but instead allows the land to rest in order to restore the soil nutrients. Recently, the fallow period has been shortened from over five years, so that now, for example, the 3 acres of bush that Ajani owns will be planted next year after only 2 years of rest. Demands on Mr. Ajani are such that he must plant more frequently just to break even.

If he is clearing land that has been under fallow, Ajani would use his matchet and axe to cut bushes and trees prior to burning during the first quarter of the year. This year, however, he has just had to hoe new mounds and continue planting. The job itself was quite difficult for one man and consequently he had to hire a few men to help.

The first crop planted is yam. This is Mr. Ajani's particular job since the crop is his sole property. Ajani pays much attention to the yam, weeding frequently as well as having to stalk and train the yam vines. Meanwhile, the other members of his family help in planting the maize, beans, melons and cassava. Although cassava is planted and harvested throughout the year, planting the other crops is done, prior to the rainy season, between January and May. Harvesting then starts around June, beginning with the crops planted early on the compound land, and continues through December.

Of all his crops, Ajani only must worry about storing yams. Although he uses a barn that allows good air circulation

to prevent moisture damage to his yams, Ajani has had a good deal of his stored crop lost to insects. With cassava, he does not have this problem, since he can allow the roots to remain stored underground. Recently, however, he has had to contend with grass cutters, a large rat-like animal, that burrows and eats the roots and tubers of cassava and yam alike.

Over the last few years, Mr. Ajani has been planting more cassava relative to his other crops. Previously he planted cassava as the last crop prior to fallow, often leaving the cassava in the ground without harvesting all of the roots. Now that he is raising cassava for sale instead of primarily as a subsistence crop, he is planting more stems, many of which he obtains from neighbors, as intercrops, reducing fallow time by cultivating earlier so that more cassava plants can be grown, and harvesting his cassava roots prior to maturity. Although he is aware that his yields per land area are diminishing, he believes that his short term financial needs warrant the changes he is making. Further, he knows that his inputs to cassava are less than for his other crops; he uses stem cuttings from harvested plants to plant new cassava and thus does not sacrifice any root output in replanting; he only has to weed around cassava plants once prior to harvest; he does not need to stalk and train vines; it is not necessary to build special storage facilities for the roots after harvest, and cassava will grow on the poorest of soils.

Although the farm provides food for the family, the Ajani's

do not rely solely on the crops produced for subsistence. In order to consume milk and eggs, meat, and vegetables, the family needs money to exchange for these and other commodities at the market. Consequently, the family sells some of their ouptut to gain the necessary revenue. The process, however, that converts crops to revenue to income is not conspicuous.

Income to the Ajani family is relatively low, perhaps on the order of 250 Naira per year. Most of this income is derived from the sale of food crops with cassava accounting for approximately 40% of total family cash income. Since Mr. Ajani owns the land he thus receives payments for all crops produced. The family income is thus divided between the sale of the roots (much of Mr. Ajani's sales are to his two wives) and the intermediate food products that the wives manufacture. Other income comes from selling yams, maize, chickens and services such as when Mr. Ajani hires himself out as a farm laborer. Money earned by the individuals (Mr. Ajani and his wives) belongs to the individuals and the household head has little authority over the expenditures of other's individual incomes. There is, however, some loaning of money from one family member to another on occasion.

Systems Analysis

The method for analyzing our field observations begins with a map of the system. The map is not based on geographical space but on decision space, charting the processes and flows of products between

decision points where the products composition, form, and value are modified. Figure 2 represents the cassava flour (amala lafun) pathways. The map for cassava meal (gari) is quite similar. It is not an exhaustive presentation since the number of combinations is a factorial function of the number of decision points. Instead, we have chosen to illustrate what we consider to be the most important pathways in terms of quantity flows of the product. We also have not included the flows of information between decision points which have much influence on the actual decisions that govern the product flows. One can assume, however, that information is channeled, at least at a minimum, along the same vectors as the product flows, but in two directions.

In the figure, circular shaped symbols represent decision points where changes in composition, form and value occur. These approximate what we refer to as nutrient conversion points. By nutrient conversion we do not strictly adhere to the precise definition of creating nutrients "de novus" but rather to the combination and recombination or addition and subtraction of nutrients contained in new products. Likewise, the transfer points, represented by box shaped symbols, express transportation or distribution processes where decision are made concerning the movement of products rather than transfering nutrients from one product to another.

The type of systems representation provides information that permits an examination of the existing processes as well as

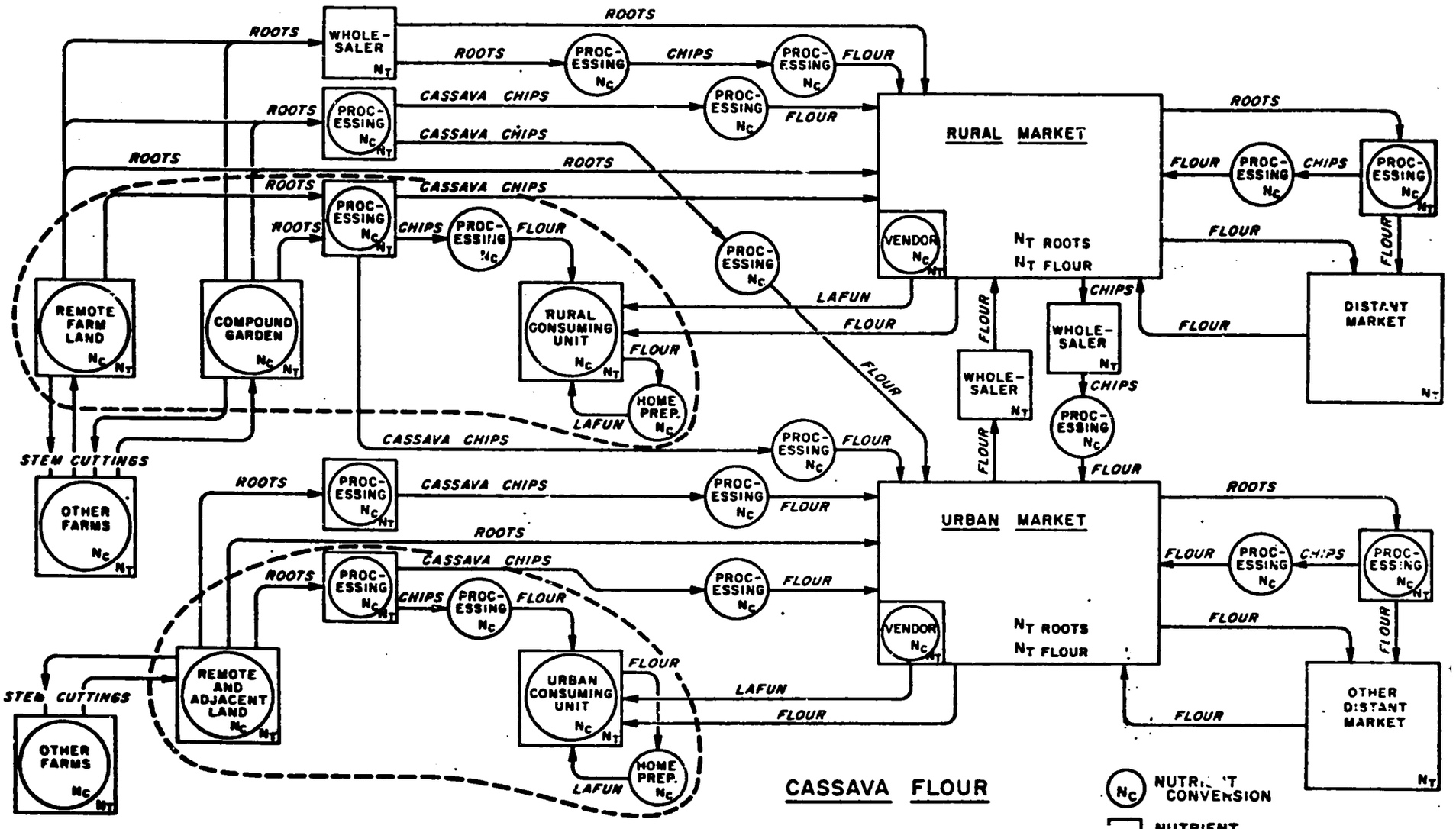

FIGURE 2. OPERATIONAL FLOW MAP OF CASSAVA FLOUR

a basis for continuing ahead with more detailed research and applications programs. With respect to the existing processes, a delineation of the ordering of product flows and the nexus of one decision point to another shows dependencies between processes which otherwise might appear unrelated. If, for example, we discuss the operations on the remote farmland in the rural area, we can observe through the decision map that the product flow can be traced to a decision point such as in the urban consuming units. Thus we can assume that decision made on remote farmland are in some way dependent on decisions in urban consuming units. Likewise, there are several intermediate decision points which affect farm operations to some extent such as those of the wholesalers, retailers, and processors (outside the family influence). By being even more specific we can learn about the links in the system that are vital inputs for our intervention recommendations for experiments and further research.

Suppose we investigate the fortification of cassava flour at least on an experimental basis in the processing stages. In order to initiate a program, there are two sets of factors which must be addressed, one which deals with the feasibility of the fortification and the other with its potential for success. To discover whether or not the experiment is feasible, it is necessary to investigate the characteristics internal to the decision point. These include the mechanics of processing, the incentives and education necessary for incorporation of the fortificant into the

process and direct costs of supply to rural areas. To assess the potential for success of the experiment, it is still necessary to determine feasibility, but additional information must also be secured. Since cassava flour is a consumer good, consumer preferences must be investigated to gain knowledge about the acceptance of fortification. Even if taste, color, and texture do not change, the product might be viewed as being different. It is also vital to assess the relative costs and benefits of fortification at some other decision point such as in the markets or in the households. It might be easier to control fortification in organized markets. It might be better to monitor the nutritional results of fortification if it occurs in households.

In order to raise questions such as these, as well as provide limited but critical answers, the decision map is required. It allows the treatment of decision points collectively, so that alternatives can be evaluated comparatively. It provides a catalogue of processes so that each can be assessed for internal advantages and disadvantages of its state characteristics. The map begins to describe a hierarchy through which it is possible to monitor the effects of the changes and identify the obstacles. Further, the map allows the construction of analogs with other systems so that an interchange of experience can occur, as between recommendations dealing with several different food products. The map also permits a more rigorous analysis of the several processes that either convert or transfer nutrients.

The consumer unit, either urban or rural, is the final recipient of the nutrients carried by a variety of foods. Each one of the unit members has a range of nutrient requirements which in a given period of time is dependent upon a number of factors. Let us limit the nutrients to calories and proteins and note the requirements by the symbol R and, therefore, in general:

$$R^{c}_{ij_{(t_1-t_0)}} = F(X_1, X_2, \ldots\ldots X_n)$$

$$R^{p}_{ij_{(t_1-t_0)}} = F(X_1, X_2, \ldots\ldots X_n)$$

where R is the requirement value of

c calories

p proteins

in

(t_1-t_0) given time period for

measurement for

$X_1, X_2, \ldots\ldots X_n$ independent variables

that influence requirement values

such as age of the

i "i"th person in the

j "j"the family.

INTERVENTION SET 1
Research Program

It is suggested that the requirements be analyzed so as to determine a base level of proteins and calories for the indigenous population. Factors have been applied to European criteria by various groups (such as FAO), but these are believed to be inappropriate.

These relations may be specified by a number of different models which have been developed for the human system. Once the requirements have been established it is necessary to investigate the processes employed by the consuming unit in seeking to satisfy the requirements.

In order to satisfy hunger, nutrition and, at times, habit, the consumer unit eats food. The following relationships shows how the nutrients ingested are a function of the prepared foods:

$$C^{c}_{ij_{(t_1-t_0)}} = F(P^{c}_{1}, P^{c}_{2}, \ldots . P^{c}_{n})$$

and

$$C^{p}_{ij_{(t_1-t_0)}} = F(P^{p}_{1}, P^{p}_{2}, \ldots . P^{p}_{n})$$

where C is the amount of the specific nutrient ingested of

c calories

p proteins in

(t_1-t_0) given time period for measurement for

INTERVENTION SET 2
Research Program

It is possible to establish a research program to collect samples of diets and perform laboratory analyses of nutrient content of the actual ingested foods, especially the soups. IITA has shown an interest in this type of effort.

P_1, P_2, ...P_n nutritional values of each specific prepared food, (in case of foods eaten raw the preparation is assumed to be in the home handling of the food) of the i"i"th person in the j"j"th family.

Each prepared food can be examined for its nutrient value by means of laboratory analysis. For example, by using this relationships the amount of cassava dependency for calorie intake can be calculated.

Each prepared food is dependent upon the food that is acquired and the manner by which it is prepared.

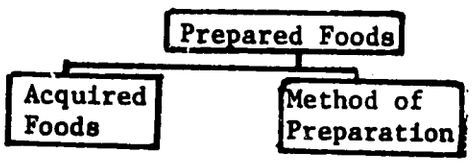

In cooking soup, for example, a combination of acquired foods such as fish, peppers, and onions are mixed by specific techniques.

The method of preparation is an important conversion point within the

system. It is here that various nutrients carried by acquired foods are manipulated through homemaking procedures into combinations which are either of greater, equal, or lesser value than each input taken by itself. For example:

$$P_1^c = B \sum_{k=1}^{n} b_k A_k^c$$

where P_1^c is the number of calories of a particular prepared food

A_k is the caloric value of the kth acquired food and

b_k is a coefficient determined by the kth method of preparation

and B is the overall preparation coefficient.

Each of the individual preparations for a particular acquired food can affect the value of the nutrients that are carried. If A_3^c represents the number of calories in the acquired peppers, then b_3 approximates the influence of the grinding operation. Then, if there is an overall preparation technique wherein all the ingredients are combined into a final

INTERVENTION SET 3
Investment Program

A food marketing and manufacturing program might be established for prepared foods using accepted and established cooking techniques.

serving, the effect is represented by the coefficient B.

A consuming unit can acquire foods through purchase or gifts and by growing them. It has been noted that cassava products are very cheap calorie providers. They are not, however, very income or price elastic. As income of a family increases, the family is not likely over a large income range to shift away from cassava products to any great extent. There will be substitutions toward yams, which are preferred, but not as a substitute for the major "energy-strength" food source. The fact remains that people like cassava products, and the cassava products have a differential advantage over other products that are in traditional use or which are being introduced, like bread and rice. What will happen in the very long run is not clear, but it is probable that cassava will remain a favorite product.

The acquired foods that enter each family unit's consumption domain may travel

through a number of different pathways. In the narrative, the pathway for the cassava flour was:

Consumer -- Retailer -- Wholesaler -- Processor -- Farmer or Producer

where the main conversion decision points were those of home preparation by the consumer, fermentation by the processor and agricultural production by the farmer. This particular example shows that 4 transfers could be accounted for between the consumer and the farm. The observation agrees with those of Thodey (1968) for gari distribution in Western Nigeria as reported by W.O. Jones (1972). It is not known, however, just how reliable this number would be as a measure of central tendency for the cassava flour since, on several occasions, a few more links in the transfer chain were observed during our field work between the consumer and the farmer. These can be seen in the decision map.

INTERVENTION SET 4

Examine the decision processes of this pathway to determine objectives and strategies of the participants. This leads to criteria for establishing experimental programs that modify these processes.

INTERVENTION SET 4 (continued)
Research Program

Identification of the various transfer chains to determine how the transfers affect income distribution and corresponding nutritional levels.

The task of describing the various transfer chains and elucidating patterns which emerge is organized into three general areas: the employment that is sponsored; the functions that are performed; and the hierarchy of decisions that govern the flow of food.

As the transfers are traced back from the consumer, we find many individuals employed as a result of trading in cassava and cassava related products. Those middlemen who take possession of the products make up the largest proportion of employment in the distribution sector. This group includes the urban and rural retailers, wholesalers and vendors. In turn, these owners of the products engage the services of others when necessary. Stall operators hire agents to buy products before reaching the markets; they also employ people to package the foods, sweep and clean the stalls, load and unload from carts and trucks, and often, although it is usually a relative, to help sell the

products. A third group whose employment is directly related to the trading of cassava products are the transporters. These include the lorry drivers, the cart pullers, and the bicycle owners who move the products from one location to another. Then, of course, there is all of the secondary employment which supports the traders such as verhicle repairmen, construction crews, restaurant operators, food vendors, and container builders.

There has been some controversy concerning the large number of traders involved in developing countries. The main argument centers on the issue of lack of sufficient scale; in other words there are so many small merchants that the average trading unit is not capable of passing on price savings based upon scale economies because they do not exist. Therefore, it is suggested that the trading unit should become larger so that it can deal in large quantities of items, so that through dealing in larger volumes, prices can be reduced. While we believe that this argument can be applied

to cassava products, we have observed that the vast numbers of people employed in trading are performing necessary functions. Although it is possible, and perhaps, beneficial, to aggregate several functions into larger organized units, it would seldom be prudent to eliminate the functions. Furthermore, in a descriptive study, it is important to document these functions so that the entire transfer mechanism can be better understood. Therefore, in addition to classifying employment in the distributive sector, it is necessary to explain the various functions that are performed.

INTERVENTION SET 5

Establish an experimental program in the retail markets which aggregates the functions in larger units.

A third characteristic of transfer processes takes employment and function and combines them into 'who does what' and 'what gets done.' This is the decision making structure which serves to control the many aspects of trading. We are concerned with three information factors involved in the decisions:

(a) type of decision - what is the decision about and how is it made (storage, renting,

pricing, ordering, etc.)

(b) decision maker - who makes the decision (owner, employees, creditors, etc.)

(c) decision criteria - why the decision was made (profit, sales, product quality, etc.)

It is therefore necessary to investigate decisions regarding such measures as setting prices, inventory levels, when to reorder, means of shipping, display promotions, and quality evaluations of products prior to purchase for resale. Here we are concerned with the strategies and tactics that are employed.

It is then important to examine the decision structure for the actual persons who make the decisions. For example, in those cases of price formulation, not only are we interested in whether or not the prices are established at the wholesale or retail level, but we attempt to identify a particular merchant or groups of merchants who may be consistently instrumental in making these decisions.

Finally, we seek to discover the

goals that are being sought through the decision. These goals are usually economic but may include traditional and cultural ends which might not be obvious at first glance.

In our description of a single pathway for cassava flour, we identified two distinct transfer decision levels between processing and consumption. Mrs. Adekanbi represents decision makers at a level we classify as retail while Mr. Sobiru is classified at a level which we call wholesale. Each has separate goals; for example, Mrs. Adekanbi is content with business as usual, but Mr. Sobiru wants to increase his share of the market. Similarly, their methods to achieve their respective goals are different: Mr. Sobiru tries to gain an advantage over his competitors through differential purchases; Mrs. Adenkanbi buys from only one supplier. The functions that each perform are also different: Mrs. Adenkanbi buys in one

quantity, transports it, has it milled into fine flour, and sells it in smaller quantities; Mr. Sobiru buys and sells in varying quantities, breaking some loads and assembling others, and utilizes more than one means of transportation. Finally, each of the two decision makers is responsible for different employment dependencies: Mr. Sobiru has an influence on at least two dozen others; Mrs. Adenkanbi's operations affect five or six others at the most.

INTERVENTION 6
Research Program

Whether or not this intermediate grinding operation is another conversion point should be determined. Since there are many such mills, their potential as fortification stations should also be investigated.

Continuing to apply our methodology we reach the processor stage. In processing the raw cassava roots into chips, a number of steps are followed which affect the nutrient content of the food as it changes form over time. The roots are peeled, cut, fermented, ground, dried, and cleaned before they are ready for transfer. The following relationship illustrates the change procedure over the entire processing operation:

$$O^c = I^c \{W_i^c \cdot W_{i+1}^c \cdot \ldots \cdot W_n^c\}_{i=1}^{n}$$

$$O^p = I^p \{ W_1^p \cdot W_{i+1}^p \cdot \ldots \cdot W_n^p \}_{i=1}^{n}$$

where I and O are the values of input and output nutrients, respectively, of

c calories and

p proteins and

W is the coefficient of the "i"th processing procedure.

The processing of cassava is very difficult and very time consuming and labor intensive. Although simple, the capital equipment needed in the preparation of cassava products is among the most complex many households will have. It is this intensity of effort needed to convert the root into an edible product and the exceptional demand in the rural areas combined with the very low opportunity cost facing the farm wife (and the fact that the equipment she needs to process this food for the home is the same as she needs for commercial purposes) that the cassava cottage industry is as extensive as it is. It is interesting to note that even in the remote

villages in the East Central State the one basic piece of mechanized equipment is the cassava grinder which is gasoline powered and portable.

There is direct evidence (formal and informal requests) from certain village groups which have shared capital for the preparation of cassava products for assistance in improving their capital structure and even their processing techniques.

INTERVENTION SET 7

Analyze the indigenous processing methods for their effects on the nutrient levels of the products as well as for their ability to eliminate or reduce the quantities of HCN.

It is possible to isolate each of the procedures to be able to discover their respective effects upon the nutrient level of the product. It would be illuminating to determine if the explicit reasons for performing an operation corresponded with the results that are determined analytically.

Before the roots are processed into chips, they are harvested, grown, and planted; prior to planting, the land is clared. These are operations which we place in the category of production practices. The transfer

that occurs between processing and production of the crops is examined using the same methodology as stated previously; we are interested in the decision structure, the functions that are performed, and the related employment.

We have noted that cassava is not very price elastic because it is generally the least expensive starch food available. It is probably for this reason as well as its relative ease of growth, the relative lack of capital requirements for its cultivation, and its capacity to produce some yield even on the most marginal lands, that we have witnessed the trend to plant it more and more. The farmer planting cassava in increasing quantities gives rise to the fact that the urban (and even the rural) demand is exceptional and growing. To meet this basic product demand the farmer is even shifting from traditional cultural practices--

INTERVENTION SET 8

Determine the traditional farming practices to develop a benchmark for evaluating changes in such inputs as mechanization, fertilization, and improved varieties. The benchmark should include such information as planting and harvesting practices; agronomic practices (soil preparation, weeding, intercropping, and multiple cropping), selection of appropriate cultivars--single variations versus many variations raised in one field, etc.

he is not planting cassava as the last rotation, but may be planting it in an early rotation. While he is still intercropping it with such crops as maize and beans, he is gradually reducing the fallow time with cassava cuttings.

Observational evidence shows that the pressures from increasing demands of the population on the crop itself are having an adverse influence: wide spread planting of the crop is causing an increase in the opportunity for plant diseases that are either bacterial, fungal or plant nutrient deficiency (cassava mosaic may be actually a nutritional problem); insect infestations and attack are more prevelant; animal destruction (from the rodent, 'the grass cutter,') is taking place; the relatively narrow genetic base of the cultivars used in the normal agricultural pattern (the so-called 'founder effect') gives rise to deleterious influences on production per plant;

greater planting of the crop in the northern regions will require new genetic input from cultivars and wild species from the new world semi-arid regions.

Preliminary Analysis of Cassava Related Foods

In the narrative 'walk through' we were primarily concerned with describing how a cassava product is utilized within the food/nutrition system in Southern Nigeria. By tracing a particular commodity from the consumer back to the producer we observed several potential intervention points within the cassava system. Through the analysis of this tracing effort, we were then able to suggest the types of interventions that deal with cassava products.

We suggest that it would be possible to analyze the cassava related food products in Southern Nigeria in this same fashion. From our observations regarding cassava related food products we were able to draw up similar mappings as a preliminary analysis of those products in the food/nutrition system. We emphasize the preliminary nature of these analyses since a complete study of these cassava related products was not carried out.

Figures 3, 4, and 5 identify the pathways we were able to discern with regard to melon seeds, maize and fish during the time we were making observations about cassava. Melon seeds and

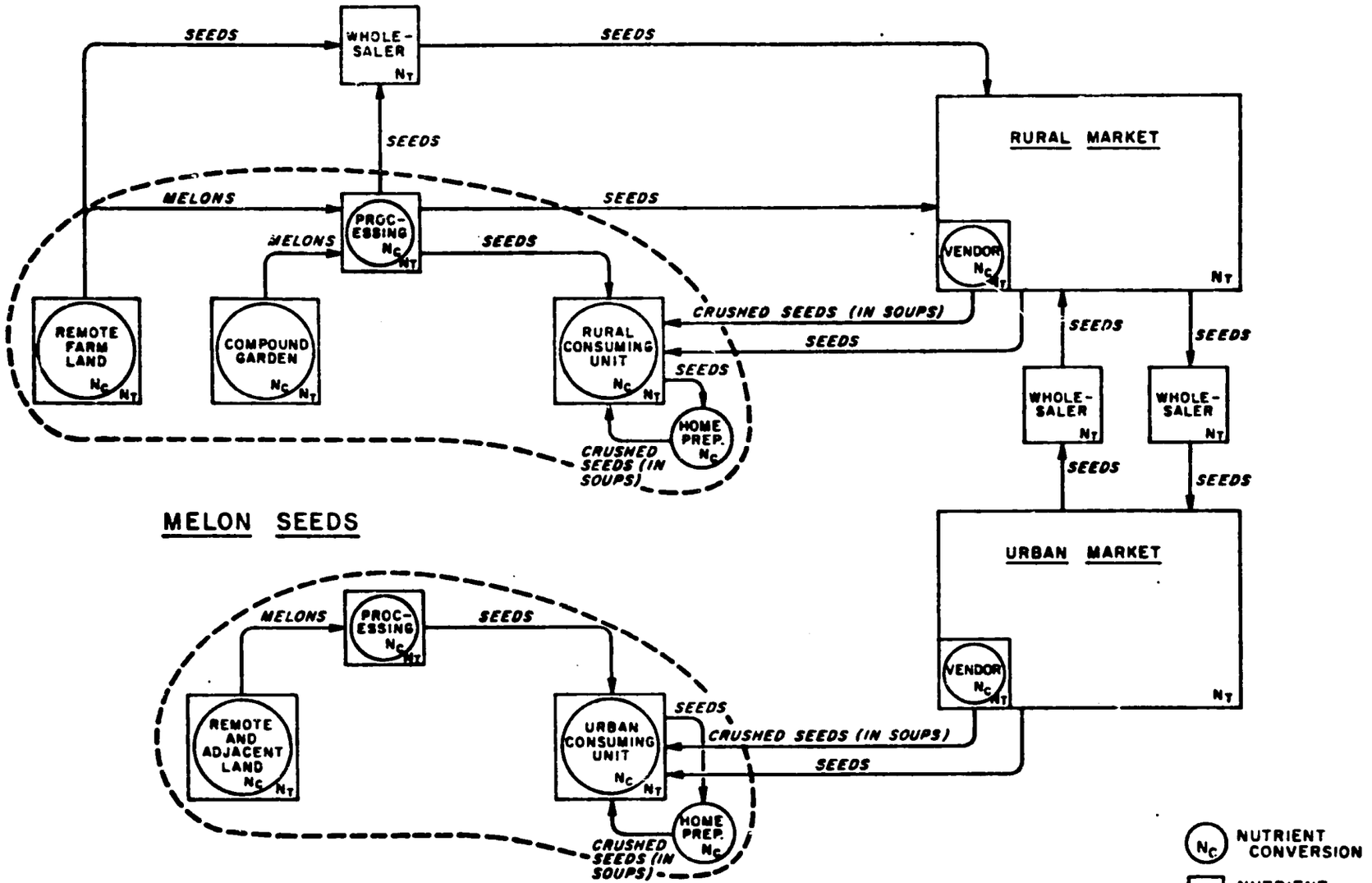

FIGURE 3. OPERATIONAL FLOW MAP OF MELON SEEDS

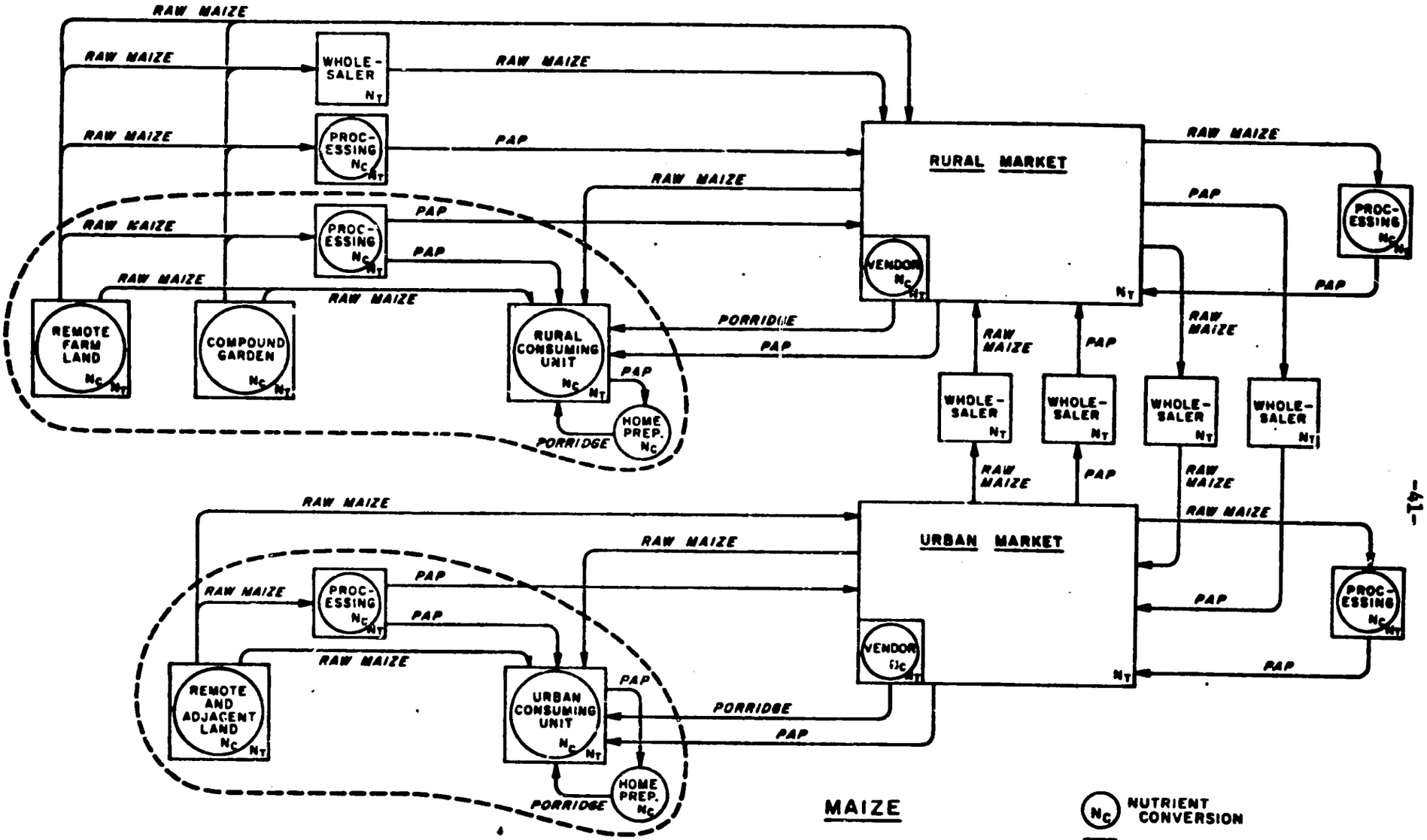

FIGURE 4. OPERATIONAL FLOW MAP OF MAIZE PRODUCTS

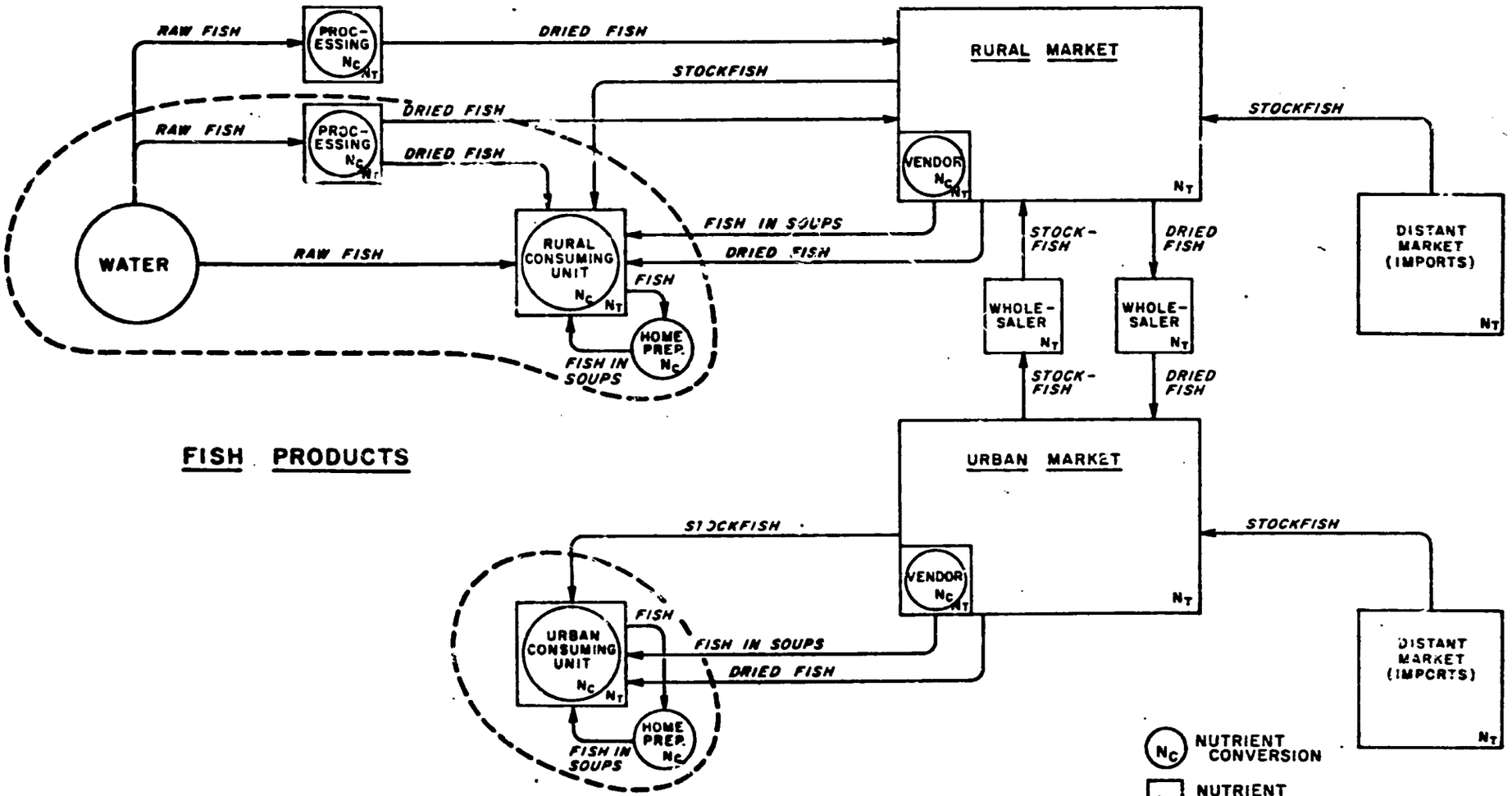

FIGURE 5. OPERATIONAL FLOW MAP OF FISH PRODUCTS

fish are examples of high protein foods used quite extensively. Maize is the predominant food used in the preparation of pap -- an important weaning food for babies. We have previously stated that soups are a partner food to cassava. Melon seeds and fish, along with a large variety of little known vegetation leaves are all soup ingredients. Each of these foods contain a high amount of protein. Unfortunately, there is virtually no good information on the nutritional quality of the soups as a dietary item. The combination of a series of ingredients and the times and amounts in which they are provided are important, but little has been done to evaluate the home preparation process. We feel that an analysis of this process is very important for it is in this area that many of the feasible intervention points lie.

It is clear that the soup as a whole is income inelastic -- there will be a soup. The various ingredients in the soup both in the constituency and the amounts of the ingredients are highly income elastic and probably price elastic. There is a clear addition scale to these soups depending on the money available to spend on them and the relative prices of the products. A basic soup will contain water, palm oil, salt, peppers and one or more of the leaves. Added will be variable amounts of egusi, okra or fish depending on the type of soup. There are specific recipes but it also appears that the soups are highly differentiable products. Intervention into the soups is an important point of study for most of the family from the age 4 and up, and especially

for nursing mothers or pregnant women.

There are some particular comments to be made regarding fish and maize. The fish products are used extensively. Smoked dried fish and dried crawfish are purchased in the markets. The fish sellers indicate that they buy from the same wholesalers and have been doing so for years. The fish are brought by truck from the Niger river and its tributaries. The price has been somewhat stable but it is now increasing. There has also been an increase in demand even at somewhat higher prices and there has been more fish sold. This is another area which has not been analyzed well. What is the value of the various aquatic products, what are the exact processing techniques, how can these be improved -- even the costs of the fish catch are unclear -- and yet this appears to be a major source of protein in the cassava dependent areas. Less fish is used in the rural areas but there are fish sellers in the rural assembly markets and fish is purchased. One informant tells us that the amount of fish used is increasing. This may be because of stress on land produced sources of nutrients. The effect on the fish population is unclear and the research being done in the area is transparent.

Regarding maize products, there is some differentiation as to the rural and urban areas. The farm children are allowed to eat ear corn whenever they want it and whenever it is available. Less ear corn seems to be eaten by children in the cities. Maize based

products are produced and used throughout the south, basically as a food for children. Pap (ogi) is often made into the product whose Yoruba name is eko tutu. Again we have not found good nutrient synthesis output product analysis for this food although it is used at most income levels quite often as a child's food and for sick people. There are also indications that a family may take it as a replacement for cassava products.

The process for pap is one that originated as the last nutrient conversion step prior to being eaten. There is also a nutrient conversion step in the urban areas where it is made and then sold in the markets. It appears that this product can be differentiated.

One final note should be made concerning the cowpeas, whose products are high protein supplements to cassava products. The bean products are prepared both at home and in the markets. Their characteristics are differentiable. However, any consideration of intervention programs for beans should take into account that they are not usually taken as a main meal dish. Thus, there are important limitations to acceptance biologically and preferentially, which probably govern the quantities that will be eaten.

CHAPTER VI

TOWARD A COMPLETE NUTRITION POLICY

This study has accomplished the task of introducing a descriptive flow model for food and nutrition planning for a cassava dependent culture. We have been able to identify several potential intervention points. Based on this information we have been able to suggest further research and experiments that can be introduced in order to influence the system.

This work completes the first step of analysis modeling within an overall systems approach that ultimately assists in restructuring the comprehensive policy for reaching nutritional goals. The first step along with those remaining to be accomplished are shown in Figure 1. This figure was presented in the introduction and is repeated here for reader convenience. While the research and experiments suggested in this study are being carried out and monitored, efforts should be made to continue with the overall approach.

In addition to the systems approach to comprehensive planning it is useful to see the problems of nutrition intervention in an historical perspective. In an area such as Southern Nigeria, the nutrition planning problem can be seen as initially a problem of distribution -- both of channels efficiency and of the distribution of income. Nutrition deficiencies could be dealt with if consumers had both the income for and the access to food. The rapid growth of population may mean that a land use problem will emerge as a

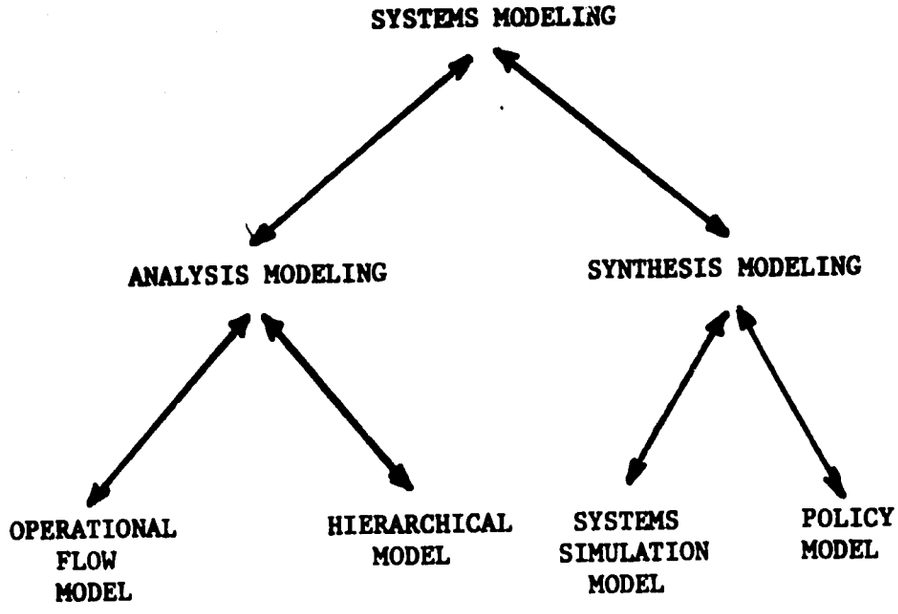

FIGURE 1

SYSTEMS APPROACH TO COMPREHENSIVE PLANNING

second priority. For even with more equitable distribution, the supplies of food may not be adequate. Thus lands used for export crops or for less efficient food production may need to be turned to food production. Finally, the population increases may continue to where even with improved distribution of income, improved channels of distribution, and land use optimized, food will be inadequate. At that point or before, population growth becomes a critical problem. Thus, the methodology developed here for intervention deals with aspects of this problem within an historical and dynamic process.

The second step in carrying out the methodology is the completion of a hierarchical model refining the organization of decision levels within the system that were first identified in this study. It was determined that at least two broad levels of decision categories can be used as inputs to the hierarchical model. The first level is characterized by members of the population who depend upon cassava for its economic or nutritional values or both. These are the farmers, the traders, the processors, and the urban and rural consumers who make decisions to process, plant, harvest, store, transport, sell, buy, and eat the products of the root crop. The second level is represented by those who have responsibility and authority for decisions concerning the plant and its products on an aggregate basis. Examples of this second level are decisions to attempt to improve the varieties planted, to research the methods of protein fortification, and to study alternative production strategies such

as those concerning livestock feeding. Those who make these decisions are internal government officials as well as those associated with the international institutes and external funding agencies. With the hierarchical model it is possible to link these decision makers, determine priorities for the various decision criteria and begin the data collection process so that observations can be verified.

The next set of tasks consists of synthesis modeling. While many of these models have been constructed, they have had a low probability of effectiveness because: (a) they have failed to meet the prerequisite of first building a descriptive operations flow model that adequately describes the processes within the subject system; (b) they have failed to build a hierarchical decision model that validates the processes and accounts for the decision points at all levels within the subject system; and (c) they have not been able to allow for manipulations to be made anywhere in the model of the subject system so that the results of these manipulations could be measured in terms of integrated decision evaluation criteria.

An intensive research program beginning with the type of study presented in this report serves to remove the first two deficiencies. The third deficiency can be alleviated by employing various simulation methods. One specific type of this method that is suggested is a state-space simulation model. This model has a history of application in developing countries. An example of the use of this kind of model would be its application in analyzing types of

intervention -- alternative fortification programs. The model would allow the results to be examined in terms of decision criteria on levels, both external and internal which would include economic (GNP, per capita income, returns on investments, etc.) as well as nutritional criteria. Thus the model allows policy makers to examine several policy options at the same time. They are able to examine the ramifications of policy decisions which are far removed from the actual intervention point. Hence a fortification project involving a particular processing stage that takes place in an urban area can be examined for its ramifications in rural areas on the farms and in the homes of the consumers. The model allows such detailed examinations because it includes (a) the variables describing the processes within the system; (b) the mappings of the distribution of products and communication channels; and, (c) the decision points as well as a priority ordering of those decision points.

It is not expected that the model would be a panacea for policy making. Present research and experiments should continue; however, with resources scarce and options so numerous, it is necessary to gain knowledge concerning the efficacy of options prior to the commitment of funds and the implementation of such options. Such a state-space simulation model clarifies the complex, hidden economic and nutritional goals, assumptions and ramifications of any policy decision. Economic goals, assumptions and ramifications can therefore be examined with relation to nutritional goals, assumptions and ramifications. Thus agricultural production programs, marketing improvement

programs, nutritional fortification programs, etc. can be examined for their interrelationships. This allows for consideration of compromises and tradeoffs between various intervention strategies and programs.

With this type of simulation model it is possible to bring together biological scientific approaches with economic, marketing, and management science approaches and information to provide a basis for cost/effective evaluations of solutions to problems in a cassava dependent culture.

Based upon the results of the simulation of the system's operations, a policy model can be developed for carrying out and monitoring integrated strategies for reaching nutritional goals. For this phase, planners might adopt "policy capturing" techniques that order priorities by accounting for the individual assumptions of decision makers. In combination with the feedback from ongoing programs, this type of model permits a flexible policy evolution by integrating several goals including the nutritional, the economic, and those that seek to continue the survivability of the national government.