AGENCY FOR INTERNATIONAL DEVELOPMENT
WASHINGTON, D. C. 20523
BIBLIOGRAPHIC INPUT SHEET

FOR AID USE ONLY
Batch 53

1. SUBJECT CLASSIFICATION
A. PRIMARY: TEMPORARY
B. SECONDARY:

2. TITLE AND SUBTITLE
Pollution control in other major polluting industries

3. AUTHOR(S)
(101) Stone,Ralph & Co.,Los Angeles

4. DOCUMENT DATE: 1977
5. NUMBER OF PAGES: 105p.
6. ARC NUMBER: ARC

7. REFERENCE ORGANIZATION NAME AND ADDRESS
Stone

8. SUPPLEMENTARY NOTES (Sponsoring Organization, Publishers, Availability)
(In Industrial pollution control,technological strategies,chapt.5,p.337-417)

9. ABSTRACT
(ENVIRONMENTAL ENGINEERING R&D)

Aluminum refining, cement manufacturing, fruit canning, and mining are just four key industries regarded as major polluting industries in terms of air and water discharges. They and 13 other industries commonly found in developing countries are reviewed in this, chapter 5 of "Industrial Pollution Control, Technological Strategies," which describes the effects, controls, and environmental impact of industrial pollutants. The profiles on each industry focus on typical manufacturing operations, available treatment devices, recovery and reuse of valuable discharges, and pollution prevention through process change or raw materials substitution. Specific air and water pollutants generated by each industry are indicated, and treatment methods for each pollutant pointed out. Tables summarize the efficiencies and costs for the air and water treatment options listed in the industry profiles.

10. CONTROL NUMBER
PN-AAD-348

11. PRICE OF DOCUMENT

12. DESCRIPTORS

13. PROJECT NUMBER

14. CONTRACT NUMBER
AID/ta-C-1091 GTS

15. TYPE OF DOCUMENT

AID 590-1 (4-74)

AID/ta-C-1091 OTS
PN-AAD-348

INDUSTRIAL POLLUTION CONTROL

TECHNOLOGICAL STRATEGIES:

APRIL 1977

BY

RALPH STONE & CO., INC.
10954 SANTA MONICA BLVD.
LOS ANGELES, CALIFORNIA

TABLE OF CONTENTS

		Page
PREFACE		v
ACKNOWLEDGMENTS		vi
FIGURES		vii
TABLES		xvi
1.	INTRODUCTION	1
2.	REGIONAL PLANNING AS AN APPROACH TO POLLUTION CONTROL	7
	REGIONAL AIR AND WATERSHED BASINS	7
	DEVELOPING THE REGIONAL PLAN	8
	WATER SUPPLY SOURCES	T6
	ENVIRONMENTAL STABILITY	16
	BASIC NATURAL CHARACTERISTICS	17
	FOR FURTHER READING	22
3.	INDUSTRIAL POLLUTANTS, METHODS AND COSTS OF CONTROL	23
	AIR POLLUTION	23
	MAJOR AIR POLLUTANTS	23
	AIR POLLUTION TREATMENT METHODS	27
	WATER POLLUTION	42
	MAJOR WATER POLLUTANTS AND THEIR INDICATORS	42
	WATER REUSE AS A CONTROL METHOD	53
	WATER POLLUTION TREATMENT METHODS	63
	SOLID WASTE POLLUTION	106
	SOURCES AND TYPES	106
	INDUSTRIAL SOLID WASTE MANAGEMENT	112
	COST ESTIMATING CURVES	126
	FOR FURTHER READING	128
4.	POLLUTION CONTROL IN CASE STUDY INDUSTRIES: POWER GENERATION, IRON AND STEEL, FOOD PROCESSING; AND SELECTED PLANTS	172
	INTRODUCTION TO THE CASE STUDIES	172
	INDUSTRY OVERVIEWS	172
	SELECTED PLANT CASE STUDIES	175
	POWER GENERATION	175
	INDUSTRY OVERVIEW	175
	ELECTRIC POWER PLANT A	202
	ELECTRIC POWER PLANT B	209

TABLE OF CONTENTS

		Page
	IRON AND STEEL	214
	INDUSTRY OVERVIEW	214
	KAISER STEEL PLANT AT FONTANA, CALIFORNIA	244
	FOOD CANNING	257
	INDUSTRY OVERVIEW	257
	CANNERY A (VEGETABLES)	283
	CANNERY B (TUNA)	286
	LATIN AMERICAN PLANTS	293
	IRON FOUNDRY	293
	COFFEE ROASTING	293
	SPARK PLUG MANUFACTURING	293
	CERAMICS MANUFACTURING	294
	PULP AND PAPER MILLING	294
	WASTE COMPOSTING	295
	SUMMARY CASE STUDY OBSERVATIONS	296
	FOR FURTHER READING	296
	COST CURVES FOR CASE STUDY INDUSTRY TREATMENT SYSTEMS	297
5.	POLLUTION CONTROL IN OTHER MAJOR POLLUTING INDUSTRIES	337
	INTRODUCTION	337
	MINING	347
	ALUMINUM REFINING	356
	COPPER REFINING	360
	LEAD AND ZINC PROCESSING	362
	CEMENT MANUFACTURING	364
	PAINT AND VARNISH MANUFACTURING	366
	FERTILIZER MANUFACTURING	369
	PETROCHEMICAL INDUSTRY	375
	PETROLEUM MANUFACTURING	384
	PULP AND PAPER MANUFACTURING	390
	COFFEE ROASTING	398
	MEAT PROCESSING	401
	SUGAR REFINING	404

TABLE OF CONTENTS(Cont.)

		Page
	TEXTILE MANUFACTURING	408
	LEATHER TANNING	413
	FOR FURTHER READING	417
6.	DECISION-MAKING METHODS FOR POLLUTION CONTROL	418
	STEPS IN DECISION-MAKING	418
	NON-QUANTITATIVE APPROACHES	419
	QUANTIFYING INTANGIBLES	419
	COST ANALYSIS	423
	DECISION AND PROBABILITY	433
	ENVIRONMENTAL CONSTRAINTS	436
	SELECTING THE BEST ALTERNATIVE	440
	FOR FURTHER READING	440
REFERENCES		441
PHOTOGRAPH CREDITS		450

PREFACE

A two-volume study was prepared to provide information relating to the impact and control of environmental pollution from industrial sources. It is intended for the use of government leaders, industrialists, and other concerned individuals who may have widely differing technical and national backgrounds.

Volume I provides background information and reference sources to facilitate general policy decisions relating to the control of industrial pollutants.* Volume II is concerned with the technical application and comparative costs of pollution abatement in manufacturing operations.

Although the purpose of the report is to describe the effects of industrial discharges and their control, it is recognized that other sources of pollution contribute to environmental problems. The problems of pollution abatement, however, are similar wherever they originate. The general principles and control methods discussed in the report will therefore usually be applicable to pollutants from both industrial and non-industrial sources.

*See inside back cover for information on ordering Volume I.

ACKNOWLEDGMENTS

We gratefully acknowledge the assistance of many individuals in the following agencies and institutions: Instituto Centro Americano de Investigacion y Technologia Industrial (ICAITI); Organization of American States; Pan American Health Organization; United Nations Development Program; United Nations Industrial Development Organization; United Nations Information Center; The World Bank; World Health Organization; Companhia Estadual de Tecnologia de Saneamento Basico (CETESB), Sao Paulo, Confederacao Nacional da Industria, Rio de Janeiro, Soc. Civil de Planejanento e Consultas Tecnicas Ltda. (CONSULTEC), Rio de Janeiro, Departmento de Limpes Publica, Grupo Executivo da Grande Sao Paulo, Instituto Engenharia Sanitaria, Rio de Janeiro, Ministerio da Industria e do Comercio, Brasilia, NGK do Brasil S. A., Mogidas Cruzes, Secretaria de Planejamento Ciencia e Technologia, Salvador, Bahia, and Superintendencia de Saneamento Ambiental (SUSAM), Sao Paulo, Brazil; Environmental Protection Council, Accra, Ghana; Camara Nacional de la Industria del Hierro y del Acero, Comision Federal de Electricidad, Confederacion de Camaras Industriales, Direcion General de Usos del Agua y Prevencion de la Contaminacion, Subsecretaria de Mejoramiento del Ambiente, and Tubos de Acero de Mexico, Mexico; Department of Science and Technology, Tandogan-Ankarra, Turkey; Council on Environmental Quality, United States Embassy to Brazil, United States Embassy to Mexico, and U. S. Environmental Protection Agency, United States; Universidade de Sao Paulo, Brazil; Syracuse University, University of Denver, and University of North Carolina, United States; Companhia Suzano de Papel e Cellulose, Brazil; and HYSLA, Mexico.

This study was prepared by Ralph Stone and Company, Inc., for the Agency for International Development under AID contract ta-C-1091. Ralph Stone and Company, Inc., is grateful for the assistance extended by AID, Department of State; Department of Commerce; Environmental Protection Agency; and Council on Environmental Quality personnel.

FIGURES

Number		Page
1-1	INDUSTRIAL POLLUTION CONTROL OPTIONS	6
2-1	CONCEPTUAL REGIONAL PLAN FOR WATER USE AND POLLUTION CONTROL	10
2-2	GREENBELT BUFFER ZONE	12
2-3	AIR BASINS	14
2-4	INDUSTRIAL POLLUTION DISCHARGE IMPACTS ON WATER RESOURCES	20
3-1	INDUSTRIAL SECTORS CONTRIBUTING TO NATIONAL DISCHARGES OF THE TWO MAJOR INDUSTRIAL AIR POLLUTANTS IN THE UNITED STATES: 1971	24
3-2	GRAVITY PARTICULATE SETTLING CHAMBER	30
3-3	MECHANICAL CYCLONE	32
3-4	BAGHOUSE FILTER	33
3-5	ELECTROSTATIC PRECIPITATOR	34
3-6	VENTURI SCRUBBER	37
3-7	ACTIVATED CARBON ADSORBER (FIXED BED)	39
3-8	PACKED ABSORPTION TOWER	40
3-9	AFTERBURNER DIRECT FLAME	41
3-10	RELATIONSHIP BETWEEN POWER INPUT AND PARTICLE SIZE FOR SELECTED PARTICULATE COLLECTING DEVICES	43
3-11	MAJOR UNITED STATES CONTRIBUTION TO SUSPENDED SOLIDS AND BOD_5: 1971	48
3-12	COMPLEX SYSTEM OF INDUSTRIAL WATER SUPPLY TREATMENT AND REUSE	60
3-13	BIOLOGICAL WASTEWATER TREATMENT PLANT (SECONDARY TREATMENT,	65
3-14	TERTIARY TREATMENT OF WASTEWATER	66
3-15	PHYSICAL-CHEMICAL WASTEWATER TREATMENT	67
3-16	SEPTIC TANK	71
3-17	CLARIFIER (PRIMARY WITH COAGULANT ADDITION)	73
3-18	FLOTATION CLARIFIER	74

FIGURES (Cont.)

Number		Page
3-19	PRESSURE FLOTATION	75
3-20	ROTARY MICROSTRAINER	76
3-21	HIGH HEAD HYDROCYCLONE	78
3-22	ACTIVATED SLUDGE SYSTEM	82
3-23	MECHANICAL AERATOR INSTALLED IN ACTIVATED SLUDGE TANK	83
3-24	TRICKLING FILTER	85
3-25	pH NEUTRALIZATION	86
3-26	VACUUM CHLORINATOR	88
3-27	GRAVITY FILTER	90
3-28	DOWNFLOW GRANULAR ACTIVATED CARBON PRESSURE FILTER	91
3-29	ION EXCHANGER COLUMN	93
3-30	ELECTRODIALYSIS SCHEMATIC	94
3-31	REVERSE OSMOSIS	95
3-32	FLASH DISTILLATION	96
3-33	COOLING TOWER	99
3-34	GRAVITY SLUDGE THICKENER	102
3-35	ANAEROBIC SLUDGE DIGESTER	103
3-36	VACUUM FILTER SCHEMATIC	104
3-37	FACULTATIVE LAGOON CROSS SECTION	105
3-38	SLUDGE INCINERATOR (MULTIPLE HEARTH) CROSS SECTION	107
3-39	COMPOSTING PLANT	118
3-40	SECTION VIEW: SANITARY LANDFILL	120
3-41	INCINERATION SYSTEM	122
3-42	AIR FANS: ESTIMATED 1974 COSTS	131
3-43	CYCLONES: ESTIMATED 1974 COSTS	132
3-44	ELECTROSTATIC PRECIPITATOR: ESTIMATED 1974 COSTS	133
3-45	PARTICULATE COLLECTION: ESTIMATED 1974 COSTS	134

FIGURES (Cont.)

Number		Page
3-46	PRELIMINARY TREATMENT, SCREENING, GRIT REMOVAL AND METERING: ESTIMATED 1974 COSTS	136
3-47	PRIMARY CLARIFIER: ESTIMATED 1974 COSTS	137
3-48	PHOSPHATE REMOVAL BY TWO-STAGE LIME CLARIFICATION: ESTIMATED 1974 COSTS	138
3-49	PRIMARY CLARIFIER WITH $FeCl_3$ ADDITION: ESTIMATED 1974 COSTS	139
3-50	CONVENTIONAL ACTIVATED SLUDGE PLANT: ESTIMATED 1974 COSTS	140
3-51	CONTACT STABILIZATION: ESTIMATED 1974 COSTS	141
3-52	EXTENDED AERATION: ESTIMATED 1974 COSTS	142
3-53	AERATION SYSTEM: ESTIMATED 1974 COSTS	143
3-54	SECONDARY CLARIFIERS: ESTIMATED 1974 COSTS	144
3-55	FACULTATIVE LAGOON: ESTIMATED 1974 COSTS FOR VARIOUS BOD_5 LOADINGS	145
3-56	AERATED LAGOONS: ESTIMATED 1974 COSTS FOR VARIOUS BOD_5 LOADING RATES	146
3-57	ANAEROBIC LAGOON: ESTIMATED 1974 COSTS	147
3-58	TRICKLING FILTER: ESTIMATED 1974 COSTS	148
3-59	HIGH RATE TRICKLING FILTER: ESTIMATED 1974 COSTS	149
3-60	MICROSTRAINING: ESTIMATED 1974 COSTS	150
3-61	SAND FILTRATION: ESTIMATED 1974 COSTS	151
3-62	MIXED MEDIA FILTERS: ESTIMATED 1974 COSTS	152
3-63	ACTIVATED CARBON ADSORPTION: ESTIMATED 1974 COSTS	153
3-64	ION EXCHANGE: ESTIMATED 1974 COSTS	154
3-65	REVERSE OSMOSIS: LARGE INSTALLATIONS: ESTIMATED 1974 COSTS	155
3-66	ELECTRODIALYSIS: ESTIMATED 1974 COSTS	156
3-67	MULTI-STAGE FLASH EVAPORATION (DESALINATION): ESTIMATED 1974 COSTS	157

FIGURES (Cont.)

Number		Page
3-68	VAPOR COMPRESSION --VERTICAL TUBE EVAPORATION-- MULTI-STAGE FLASH DESALINATION: ESTIMATED 1974 COSTS	158
3-69	NEUTRALIZATION: ESTIMATED 1974 COSTS	159
3-70	CHLORINATION: ESTIMATED 1974 COSTS	160
3-71	BREAKPOINT CHLORINATION: ESTIMATED 1974 COSTS	161
3-72	OZONATION: ESTIMATED 1974 COSTS	162
3-73	SPREADING BASIN:ESTIMATED 1974 COSTS	163
3-74	ANAEROBIC DIGESTION: ESTIMATED 1974 COSTS	164
3-75	SLUDGE LAGOON: ESTIMATED 1974 COSTS	165
3-76	GRAVITY THICKENING: ESTIMATED 1974 COSTS	166
3-77	VACUUM FILTER: ESTIMATED 1974 COSTS	167
3-78	CENTRIFUGE: ESTIMATED 1974 COSTS	168
3-79	MULTIPLE HEARTH INCINERATION: ESTIMATED 1974 COSTS	169
3-80	COOLING TOWER: ESTIMATED 1974 COSTS	171
4-1	ELECTRIC POWER PRODUCTION	178
4-2	EFFECT OF TEMPERATURE ON NO_x FORMATION	183
4-3	EFFECT OF EXCESS AIR ON NO_x FORMATION	185
4-4	EFFECT OF FLUE GAS RECIRCULATION ON NO_x GENERATION	187
4-5	EFFECT OF AIR PREHEAT ON NO_x GENERATION	189
4-6	PRIMARY AIR POLLUTION TREATMENT SYSTEM: POWER GENERATION (COAL, OIL, NATURAL GAS)	195
4-7	SECONDARY AIR POLLUTION TREATMENT SYSTEM: POWER GENERATION (COAL, OIL, NATURAL GAS)	196
4-8	PRIMARY WASTEWATER TREATMENT SYSTEM: POWER GENERATION	197
4-9	SECONDARY WASTEWATER TREATMENT SYSTEM: POWER GENERATION	198
4-10	TERTIARY WASTEWATER TREATMENT SYSTEM: POWER GENERATION	199

FIGURES

Number		Page
4-11	IRON AND STEEL INDUSTRY	216
4-12	PRIMARY AIR POLLUTION TREATMENT SYSTEM: IRON AND STEEL	231
4-13	SECONDARY AIR POLLUTION TREATMENT SYSTEM: IRON AND STEEL	232
4-14	TERTIARY AIR POLLUTION TREATMENT SYSTEM: IRON AND STEEL	233
4-15	PRIMARY WASTEWATER TREATMENT SYSTEM: IRON AND STEEL	234
4-16	SECONDARY WASTEWATER TREATMENT SYSTEM: IRON AND STEEL	236
4-17	TERTIARY WASTEWATER TREATMENT SYSTEM: IRON AND STEEL	238
4-18	KAISER STEEL MILL: WATER AND WASTEWATER SYSTEM	251
4-19	FRUIT, VEGETABLE, AND SPECIALTY CANNING	259
4-20	SEAFOOD CANNING	262
4-21	PRIMARY WASTEWATER TREATMENT SYSTEM: FRUIT AND VEGETABLE CANNING	270
4-22	SECONDARY WASTEWATER TREATMENT SYSTEMS: FRUIT AND VEGETABLE CANNING	271
4-23	TERTIARY WASTEWATER TREATMENT SYSTEM: FRUIT AND VEGETABLE CANNING	272
4-24	PRIMARY AND SECONDARY TREATMENT SYSTEMS: CATFISH CANNING	273
4-25	TERTIARY WASTEWATER TREATMENT SYSTEM: CATFISH CANNING	274
4-26	PRIMARY, SECONDARY, AND TERTIARY WASTEWATER TREATMENT SYSTEMS: BLUE CRAB CANNING	275
4-27	PRIMARY WASTEWATER TREATMENT SYSTEM: SHRIMP AND TUNA CANNING	276
4-28	SECONDARY WASTEWATER TREATMENT SYSTEM: SHRIMP CANNING	277

FIGURES (Cont.)

Number		Page
4-29	TERTIARY WASTEWATER TREATMENT SYSTEM: SHRIMP CANNING	278
4-30	PRIMARY WASTEWATER TREATMENT SYSTEM: TUNA CANNING	279
4-31	SECONDARY WASTEWATER TREATMENT SYSTEM: TUNA CANNING	280
4-32	TERTIARY WASTEWATER TREATMENT SYSTEM: TUNA CANNING	281
4-33	WASTEWATER TREATMENT SYSTEM: TUNA CANNERY B	290
4-34	AIR POLLUTION CONTROL COST: POWER GENERATION (COAL) PRIMARY TREATMENT	300
4-35	AIR POLLUTION CONTROL COST: POWER GENERATION (OIL) PRIMARY TREATMENT	301
4-36	AIR POLLUTION CONTROL COST: POWER GENERATION (NATURAL GAS) PRIMARY TREATMENT	302
4-37	AIR POLLUTION CONTROL COST: POWER GENERATION (COAL) SECONDARY TREATMENT	303
4-38	AIR POLLUTION CONTROL COST: POWER GENERATION (OIL) SECONDARY TREATMENT	304
4-39	WATER POLLUTION CONTROL COST: POWER GENERATION (COAL) PRIMARY TREATMENT	305
4-40	WATER POLLUTION CONTROL COST: POWER GENERATION (OIL) PRIMARY TREATMENT	306
4-41	WATER POLLUTION CONTROL COST: POWER GENERATION (NATURAL GAS) PRIMARY TREATMENT	307
4-42	WATER POLLUTION CONTROL COST: POWER GENERATION (COAL) SECONDARY TREATMENT	308
4-43	WATER POLLUTION CONTROL COST: POWER GENERATION (OIL) SECONDARY TREATMENT	309
4-44	WATER POLLUTION CONTROL COST: POWER GENERATION (NATURAL GAS) SECONDARY TREATMENT	310
4-45	WATER POLLUTION CONTROL COST: POWER GENERATION (COAL) TERTIARY TREATMENT	311

FIGURES

Number		Page
4-46	WATER POLLUTION CONTROL COST: POWER GENERATION (OIL) TERTIARY TREATMENT	312
4-47	WATER POLLUTION CONTROL COST: POWER GENERATION (NATURAL GAS) TERTIARY TREATMENT	313
4-48	AIR POLLUTION CONTROL COST: IRON AND STEEL PRIMARY TREATMENT	315
4-49	AIR POLLUTION CONTROL COST: IRON AND STEEL SECONDARY TREATMENT	316
4-50	AIR POLLUTION CONTROL COST: IRON AND STEEL TERTIARY TREATMENT	317
4-51	WATER POLLUTION CONTROL COST: IRON AND STEEL PRIMARY TREATMENT	318
4-52	WATER POLLUTION CONTROL COST: IRON AND STEEL SECONDARY TREATMENT	319
4-53	WATER POLLUTION CONTROL COST: IRON AND STEEL TERTIARY TREATMENT	320
4-54	WATER POLLUTION CONTROL COST: FRUIT, VEGETABLE, AND SPECIALTY CANNING PRIMARY TREATMENT	322
4-55	WATER POLLUTION CONTROL COST: FRUIT, VEGETABLE, AND SPECIALTY CANNING SECONDARY TREATMENT	323
4-56	WATER POLLUTION CONTROL COST: FRUIT, VEGETABLE, AND SPECIALTY CANNING TERTIARY TREATMENT	324
4-57	WATER POLLUTION CONTROL COST: CATFISH CANNING PRIMARY TREATMENT	325
4-58	WATER POLLUTION CONTROL COST: CATFISH CANNING SECONDARY TREATMENT	326
4-59	WATER POLLUTION CONTROL COST: CATFISH CANNING TERTIARY TREATMENT	327
4-60	WATER POLLUTION CONTROL COST: BLUE CRAB CANNING PRIMARY TREATMENT	328
4-61	WATER POLLUTION CONTROL COST: BLUE CRAB CANNING SECONDARY TREATMENT	329

FIGURES (Cont.)

Number		Page
4-62	WATER POLLUTION CONTROL COST: BLUE CRAB CANNING TERTIARY TREATMENT	330
4-63	WATER POLLUTION CONTROL COST: SHRIMP CANNING PRIMARY TREATMENT	331
4-64	WATER POLLUTION CONTROL COST: SHRIMP CANNING SECONDARY TREATMENT	332
4-65	WATER POLLUTION CONTROL COST: SHRIMP CANNING TERTIARY TREATMENT	333
4-66	WATER POLLUTION CONTROL COST: TUNA CANNING PRIMARY TREATMENT	334
4-67	WATER POLLUTION CONTROL COST: TUNA CANNING SECONDARY TREATMENT	335
4-68	WATER POLLUTION CONTROL COST: TUNA CANNING TERTIARY TREATMENT	336
5-1	BAUXITE PROCESSING	357
5-2	ALUMINUM REFINING	358
5-3	COPPER PRODUCTION	361
5-4	ZINC AND LEAD PRODUCTION	363
5-5	CEMENT PRODUCTION	365
5-6	PAINT PRODUCTION	367
5-7	VARNISH PRODUCTION	368
5-8	NITROGEN FERTILIZER PROCESSING	370
5-9	PHOSPHATE FERTILIZER PROCESSING	372
5-10	POTASH FERTILIZER PROCESSING	373
5-11	POLYMER SYNTHESIS	376
5-12	PETROLEUM INDUSTRY	385
5-13	PAPER PRODUCTION	391
5-14	COFFEE PRODUCTION	399
5-15	MEAT PROCESSING	402
5-16	SUGAR REFINING	405
5-17	DEVICES TO REDUCE ENTRAINMENT	407

FIGURES (Cont.)

Number		Page
5-18	WOOL FABRIC PRODUCTION	409
5-19	COTTON FABRIC PRODUCTION	410
5-20	SYNTHETIC FABRIC MANUFACTURING PROCESS	411
5-21	LEATHER PRODUCTION	414
6-1	GOVERNMENT POLLUTION CONTROL DECISION TREE	420
6-2	INDUSTRY POLLUTION CONTROL DECISION TREE	421
6-3	MARGINAL COST-BENEFIT APPROACH	427
6-4	COST-BENEFIT TRADE-OFF ANALYSIS OF INDUSTRIAL POLLUTION CONTROL	429
6-5	TWO APPROACHES TO COST-EFFECTIVENESS	431
6-6	APPLICATION OF COST EFFECTIVENESS GOAL ACHIEVEMENT METHODS	432
6-7	DECISION TREE PROBABLE VALUE METHOD	435
6-8	PAY-OFF PERIOD AND BREAK-EVEN ANALYSIS	437
6-9	ENVIRONMENTAL CONSTRAINT MODEL	438
6-10	ENVIRONMENTAL IMPACT ASSESSMENT FOR REGIONAL/ NATIONAL DECISION-MAKING	439

TABLES

Number		Page
2-1	ESTIMATED MAXIMUM INORGANIC CONCENTRATIONS FOR BIOLOGICAL TREATMENT OF INDUSTRIAL EFFLUENT	15
3-1	DETRIMENTAL EFFECTS OF SELECTED AIR POLLUTANTS	28
3-2	ADVANTAGES AND DISADVANTAGES OF PARTICULATE CONTROL DEVICES	29
3-3	ADVANTAGES AND DISADVANTAGES OF GASEOUS POLLUTANT CONTROL PROCESSES	38
3-4	AIR POLLUTANT CONTROL OPTIONS	44
3-5	AIR POLLUTION WORKSHEET	45
3-6	DETRIMENTAL EFFECTS OF SELECTED WATER POLLUTANTS	52
3-7	LIMITS OF POLLUTANTS FOR IRRIGATION WATER	54
3-8	COOLING WATER QUALITY REQUIREMENTS FOR MAKEUP WATER TO RECIRCULATING SYSTEMS	57
3-9	TYPICAL QUALITY OF SECONDARY TREATED MUNICIPAL WASTEWATER	58
3-10	WATER SUPPLY QUALITY GUIDELINES FOR DIFFERENT USES	64
3-11	ADVANTAGES AND DISADVANTAGES OF SELECTED PRETREATMENT AND PRIMARY TREATMENT PROCESSES	70
3-12	ADVANTAGES AND DISADVANTAGES OF SELECTED SECONDARY TREATMENT PROCESSES	81
3-13	WASTEWATER TREATMENT OPTIONS	108
3-14	WATER POLLUTION WORKSHEET	109
3-15	SELECTED INDUSTRIAL SOLID WASTE CATEGORIES	113
3-16	PROCESSING, RECOVERY, AND DISPOSAL OPTIONS: COST	115
3-17	SOLID WASTE WORKSHEET	123
4-1	EMISSION FACTORS FROM FUEL COMBUSTION	180
4-2	PARTICULATE EMISSION FACTORS FROM COAL COMBUSTION	181
4-3	EFFECT OF TIME ON NO_x FORMATION	184
4-4	NO_x CONTROL METHODS: COST AND EFFICIENCY	188

TABLES

Number		Page
4-5	EFFECT OF BURNER CONFIGURATION ON NO_x GENERATION	190
4-6	AVERAGE WASTEWATER FLOW-RATES: POWER GENERATION	191
4-7	ASH BY-PRODUCT USE IN 1972	193
4-8	AIR POLLUTION CONTROL EQUIPMENT: POWER GENERATION	194
4-9	WATER POLLUTION CONTROL EQUIPMENT: POWER GENERATION (COAL, OIL, AND NATURAL GAS)	194
4-10	AIR POLLUTANT REMOVAL EFFICIENCIES OF THE SELECTED TREATMENT SYSTEMS: POWER GENERATION	200
4-11	WATER POLLUTANT REMOVAL EFFICIENCIES OF THE SELECTED TREATMENT SYSTEMS: POWER GENERATION	201
4-12	AIR POLLUTION EMISSION STANDARDS: ELECTRIC POWER GENERATION	203
4-13	NPDES WASTE DISCHARGE REQUIREMENTS: POWER PLANT A	204
4-14	AIR POLLUTANT GENERATION RATES	206
4-15	WATER POLLUTANTS: SOURCE AND CONCENTRATION	208
4-16	NPDES WASTE DISCHARGE REQUIREMENTS: POWER PLANT B	210
4-17	CAPACITY AND OUTPUT: POWER PLANT B	211
4-18	POLLUTANT GENERATION: POWER PLANT B	211
4-19	BY-PRODUCT RECOVERY POTENTIAL OF STEEL PRODUCTION WASTEWATERS	224
4-20	REUSE POTENTIALS FOR SOLID WASTE RESIDUES PRODUCED BY POLLUTION TREATMENT PROCESSES	225
4-21	AVERAGE AIR EMISSION PARAMETERS: IRON AND STEEL	228
4-22	AVERAGE WASTEWATER PARAMETERS: IRON AND STEEL	229
4-23	AIR POLLUTION CONTROL EQUIPMENT: IRON AND STEEL	240
4-24	WATER POLLUTION CONTROL EQUIPMENT: IRON AND STEEL	241
4-25	AIR POLLUTANT REMOVAL EFFICIENCIES OF THE SELECTED TREATMENT SYSTEMS: INTEGRATED IRON AND STEEL INDUSTRY	242

TABLES (Cont.)

Number		Page
4-26	WATER POLLUTANT REMOVAL EFFICIENCIES OF THE SELECTED TREATMENT SYSTEMS: INTEGRATED IRON AND STEEL INDUSTRY	243
4-27	THE KAISER STEEL FONTANA PLANT: GENERAL INFORMATION	245
4-28	AIR POLLUTION EMISSION STANDARDS: STEEL MANUFACTURING	247
4-29	NPDES WASTE DISCHARGE REQUIREMENTS: KAISER STEEL PLANT, FONTANA ,CALIFORNIA, U.S.A.	252
4-30	SPECIFIC PRODUCTS IN THE FRUIT, VEGETABLE,AND SPECIALTY CANNING SUBCATEGORIES	258
4-31	PEELING METHODS	260
4-32	AVERAGE WASTEWATER PARAMETERS: FRUIT, VEGETABLE,AND SPECIALTY CANNING	264
4-33	AVERAGE WASTEWATER PARAMETERS: SEAFOOD CANNING	266
4-34	WATER POLLUTION CONTROL EQUIPMENT: FRUIT, VEGETABLE, AND SPECIALTY CANNING	268
4-35	WATER POLLUTION CONTROL EQUIPMENT: SEAFOOD CANNING	269
4-36	WATER POLLUTANT REMOVAL EFFICIENCIES OF THE SELECTED TREATMENT SYSTEMS: FOOD CANNING	282
4-37	AIR POLLUTION EMISSION STANDARDS: FOOD PROCESSING PLANTS	284
4-38	NPDES WASTE DISCHARGE REQUIREMENTS: CANNERY A	285
4-39	NPDES WASTE DISCHARGE REQUIREMENTS: CANNERY B	288
4-40	WATER POLLUTANT REMOVAL EFFICIENCIES FOR THE DISSOLVED AIR FLOTATION SYSTEM	291
4-41	COST OF POLLUTION CONTROL: POWER GENERATION	298
4-42	POLLUTION CONTROL COST EQUATIONS: POWER GENERATION	299
4-43	POLLUTION CONTROL COST EQUATIONS: IRON AND STEEL	314
4-44	WATER POLLUTION CONTROL COST EQUATIONS: FOOD CANNING	321

TABLES (Cont.)

Number		Page
5-1	INDUSTRIAL AIR POLLUTANT GENERATION, IMPACT, AND TREATMENT	338
5-2	INDUSTRIAL WATER POLLUTANT GENERATION, IMPACT, AND TREATMENT	340
5-3	AIR POLLUTANTS: TREATMENT PROCESSES, REMOVAL EFFICIENCIES, AND COSTS	343
5-4	WATER POLLUTANTS: TREATMENT PROCESSES, REMOVAL EFFICIENCIES, AND COSTS	344
5-5	PARTICULATE DISCHARGES: MINING INDUSTRY	349
5-6	WATER POLLUTANT DISCHARGES: MINING INDUSTRY	350
5-7	DRIFT AND SHAFT MINE ACID POLLUTION CONTROL METHODS	354
5-8	SURFACE MINE ACID POLLUTION AND EROSION CONTROL METHODS	355
5-9	PRINCIPAL WATER POLLUTANT DISCHARGES: NITROGEN FERTILIZERS	371
5-10	PRINCIPAL AIR CONTAMINANTS AND EMISSION SOURCES: MANUFACTURE OF RESINS	377
5-11	PETROCHEMICAL INDUSTRY WASTEWATER LOADING AND RAW WASTE LOADS	378
5-12	PETROCHEMICAL RECOVERY PRACTICES	383
5-13	POLLUTANT DISCHARGE SOURCES: PETROLEUM INDUSTRY	387
5-14	EFFLUENT LOADS FROM PULP AND PAPER MILLS	393
5-15	POTENTIAL WASTE REDUCTION EFFICIENCIES OF SELECTED PROCESS MODIFICATIONS: PULP AND PAPER PRODUCTION	396
5-16	UNCONTROLLED PARTICULATE EMISSIONS FROM COFFEE PROCESSING	400
5-17	COFFEE - ROASTER EXHAUST GASES	400
5-18	WASTEWATER TREATMENT COSTS: LEATHER TANNING INDUSTRY	416

TABLES (Cont.)

Number		Page
6-1	SAMPLE LIST OF DECISION-MAKING CRITERIA	422
6-2	SCORE CARD METHOD: HYPOTHETICAL EXAMPLE	424
6-3	GOAL ACHIEVEMENT/COST - EFFECTIVENESS WORKSHEET	434

CHAPTER 1

INTRODUCTION

The primary purpose of this volume is to provide information on commonly used technologies for reducing the environmental impact of industrial air and water pollutants, and to indicate their relative costs for removing different quantities of pollutants from industrial waste streams.

The topics discussed include:

- Pollution abatement approaches which may supplement, facilitate, or replace end-of-pipe treatment processes.
- The potential adverse effects of major air and water pollutants generated by industrial sources.
- Available techniques, processes, and equipment which may be used separately or as parts of a system for removing or reducing pollutants in industrial discharges to the air and water environment.
- Pollutants generated by selected basic industries, and examples of suitable treatment systems for their control.
- Actual pollution abatement practices used by specific industrial plants in three case study industries.
- Related economic data and cost curves.

MINIMIZING POLLUTION CONTROL COSTS

A major objective of industry is to maximize profits. Industrial firms will therefore usually seek the most cost-efficient method of achieving desired or required levels of pollution control. Two related factors should be considered: the need to comply with both present and anticipated future control requirements, and the alternative means by which pollution abatement may be achieved.

The first factor is important because retrofitting can be excessively difficult and costly. Industrial planners should therefore consider the advisability of installing at least the basic fittings for future control devices during initial construction of new plants or additions to existing plants. The actual control devices can then be attached later at minimum cost whenever stricter pollution control programs require their installation.

The second factor is important because consideration of alternative options for pollution control will help in the selection of the most suitable and least costly system of control for an individual industrial plant or operation. Approaches which can advantageously supplement, and sometimes replace, end-of-pipe treatment include: substituting

alternative non-polluting manufacturing processes, modifying existing processes to reduce their polluting effects, substituting less-polluting raw materials, preventing pollution through the recycling and by-product recovery of waste discharges, and appropriate land use and plant siting--especially industrial parks which permit comprehensive, multi-plant pollution control treatment and waste reuse methods.

NATURAL PURIFICATION--PROS AND CONS

Natural cycles involve a combination of physical, chemical, and biological processes which maintain a dynamic equilibrium among organic and inorganic matter, living organisms, and inanimate objects. Major natural self-purification processes include the mixing and dilution of wastes, absorption of particulates and gases by rainfall, adsorption of gases by plants, settling of particulates discharged into the air onto the ground and surface water, precipitation of suspended solids discharged into water bodies onto the bottoms, biological decomposition of organic matter, and chemical conversion of organic and inorganic matter.

Industrial and other pollutants enter natural cycles when discharged into the environment. In most developed regions, however, self-purification processes cannot eliminate all the potential harmful effects of untreated industrial discharges. Some pollutants are generated and released into the environment more quickly than the natural processes can reduce their harmful effects; others interfere with desirable ecological relationships, or have toxic effects which resist or interfere with self-purification processes.

The full impact of some toxic substances may be delayed for years. Certain pollutants, for example, may be concentrated in the food chain by plants and animals, and in their higher forms become highly toxic; or the effects may become evident later or in succeeding generations as a cause of cancer, failure to reproduce, or genetic damage. Other pollutants, such as nutrients (organic carbon or carbon dioxide, nitrogen and phosphorus compounds), may cause an over-development of particular links in natural food chains, with secondary effects which cause environmental degradation. Even small nutrient discharges into a water body may stimulate excessive algal growth and, as a consequence, contribute to eutrophication and resulting damage to fish and other desirable aquatic life. In addition, since even effective self-purification processes generally require considerable time to restore environmental quality, they are of little value in reducing the immediate local harmful impacts of industrial pollutants on nearby human, animal, and plant life.

There has been an optomistic tendency to overestimate the capacity of environmental self-purification mechanisms, and to perceive actual or potential damage as insignificant when compared with the benefits of industrial development. The subsequent damage to important natural systems, however, has pointed up the limitations of natural purification processes, the costs of environmental pollution, and the need to weigh these costs against the costs and benefits of controlling pollution from industrial sources. In general,

therefore, natural self-purification processes cannot be relied upon to control the potential adverse effects of industrial pollutants. Photographs 1-3, 1-4 , and 1-5 show three examples where natural purification failed to make polluted lake water safe for drinking, fishing or recreation.

TYPES OF INDUSTRIAL POLLUTION CONTROL OPTIONS

Figure 1-1 summarizes the basic types of industrial pollution control measures which can be used to protect the environment. A pollution control program may combine all or several. For each basic type of strategy, the report will describe commonly used methods with broad industrial applications. Technological process changes which are very specific to individual industries are multitudinous and beyond the scope of this book.

MEETING POLLUTION ABATEMENT OBJECTIVES

In most countries, protecting the natural environment is either a current objective or is being reviewed as a future national objective. The information provided in this volume can assist industrial planners to develop pollution abatement programs which meet present or anticipated discharge standards. Further helpful information can be secured from appropriate government, industry, and institutional agencies in countries and regions where programs to control industrial discharges are already in effect. Direct observation, personal contacts, and a search of available literature may all be useful. The last chapter of Volume I offers further suggestions on possible sources of information. *

Although the scope of this guidebook is limited to industrial pollutants, most of the discussion and control methods will apply equally well to polluting discharges from other commercial and municipal sources.

* See inside back cover for information on ordering Volume I.

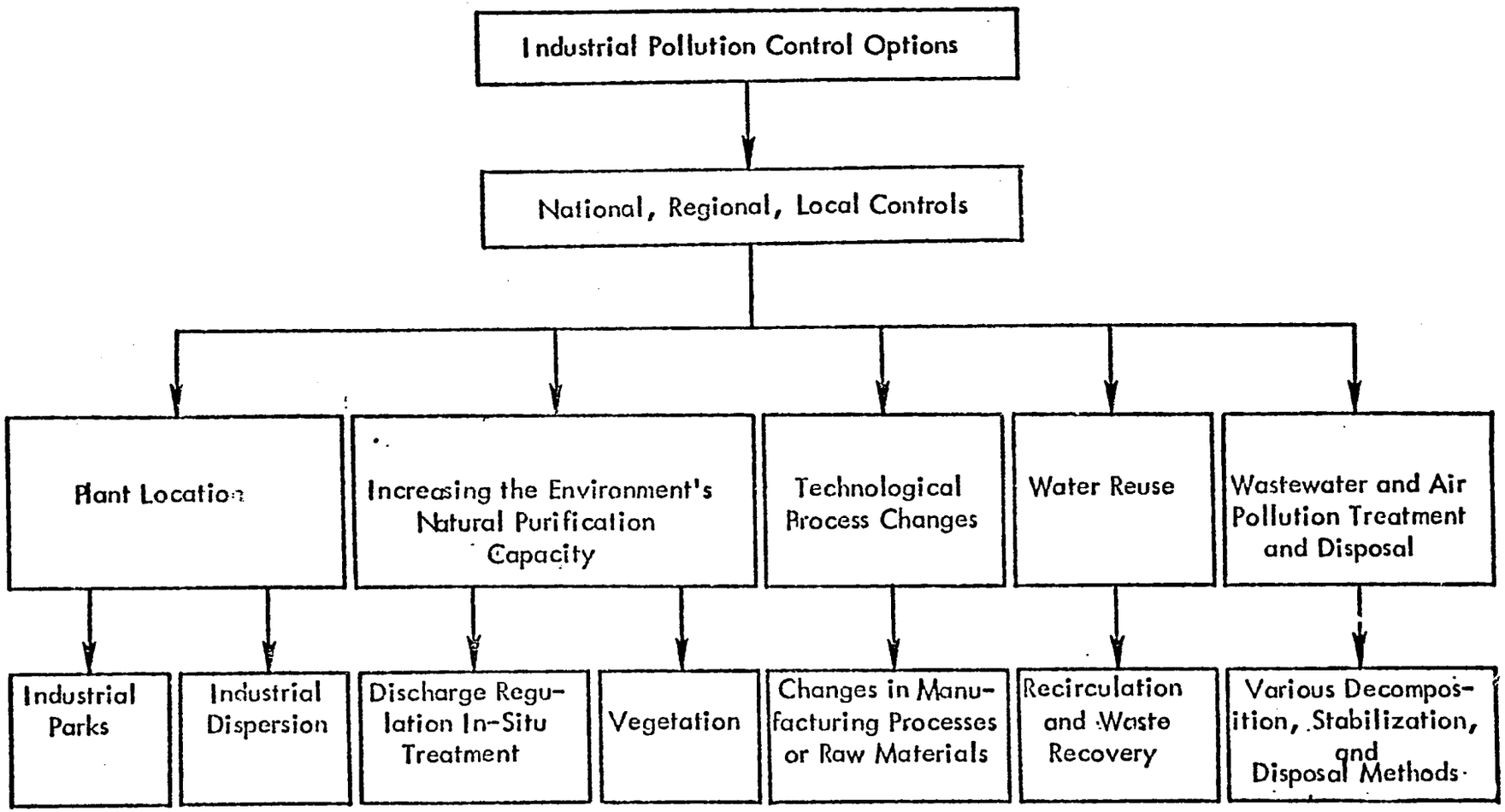

FIGURE 1-1
INDUSTRIAL POLLUTION CONTROL OPTIONS

POLLUTION CONTROL IN OTHER MAJOR POLLUTING INDUSTRIES

April 1977

(Chapt. 5 of Industrial Pollution Control, Technological Strategies)

by

Ralph Stone & Co., Inc.
10954 Santa Monica Blvd.
Los Angeles, California

CHAPTER 5
POLLUTION CONTROL IN OTHER MAJOR POLLUTING INDUSTRIES

INTRODUCTION

This chapter reviews the generation and control of waste discharges from key industries which (1) may be major dischargers of air and water pollution, and (2) are commonly found in developing countries. Three industries meeting these criteria (power generation, iron and steel production, and food processing) are excluded because they were developed in Chapter 4 as case studies. The industrial profiles in this chapter concentrate on typical manufacturing operations, available treatment devices, recovery and reuse of valuable discharges, and pollution prevention through process change or raw materials substitution. The pollution treatment options discussed in the profiles are not, in most cases, unique to the particular industry. Tables 5-1 and 5-2 summarize the specific air and water pollutants generated by each of the industries profiled in this chapter, and by the three case study industries profiled in Chapter 4. Treatment methods are indicated for each pollutant.

Tables 5-3 and 5-4 summarize the efficiencies and costs for the air and water treatment options listed in the industry profiles. When information specific to an industry is available, it is included in that industry's profile. The costs are calculated for a specific waste stream flow rate and should therefore be used only to compare options. For cost information specific to other flow rates, the reader should refer to the cost curves of Chapter 3 of this volume. All cost estimates are subject to change with time, and local costs can vary considerably from these estimates.

TABLE 5-1
INDUSTRIAL AIR POLLUTANT GENERATION, IMPACT, AND TREATMENT

Industry	Particulates	Sulfur Oxides	Hydrogen Sulfide	Nitrogen Oxides	Ammonia	Carbon Monoxide
Aluminum refining	●					
Cement manuf.	●					
Coffee roasting	○					
Copper refining	●	●				⊙
Electric power gen.	●	●		●		○
Fertilizer manuf.	●	●		●	●	
Fish canning						
Fruit canning industry		⊙		⊙		
Iron & steel production	⊙	⊙			⊙	●
Lead & zinc processing	●	●				
Leather tanning		⊙			●	
Meat processing						
Mining	●					
Paint & varnish manuf.	⊙					
Petrochemical refining		⊙				●
Petroleum refining	⊙	⊙	○	●	○	●
Pulp & paper manuf.	●	●	●	⊙	●	
Sugar refining	●			⊙		○
Textile manuf.	⊙					
Treatment	1,2,3,4 6,7,13	2,8 9,10	2,6,12	2	10,12	5,6

LEGEND

● Major environmental impact
○ Minor environmental impact
1 Mechanical collector
2 Wet scrubber
3 Fabric filter
4 Electrostatic precipitator
5 Afterburner
6 Catalytic oxidation
7 Furnace injection
8 Sulfuric acid recovery plant
9 Sulfur recovery
10 Ammonium sulfate recovery
11 Condenser
12 Stripper
13 Adsorber

TABLE 5-1 (Cont.)

Industry	Fluorine	Hydro-carbons	Mercaptans	Other Organic Compounds	Odor
Aluminum refining					
Cement manuf.					
Coffee roasting				○	●
Copper refining	○				
Electric power gen.		○		●	
Fertilizer manuf.	●	○		○	●
Fish canning		○		○	●
Fruit canning industry				○	
Iron & steel production		○		○	○
Lead & zinc processing					
Leather tanning				○	●
Meat processing				○	●
Mining					
Paint & varnish manuf.		●		●	○
Petrochemical refining		●		○	●
Petroleum refining		●	○	○	●
Pulp & paper manuf.			●		●
Sugar refining				○	
Textile manuf.					
Treatment	2,12	2,5,6 11,13	12	5,11	2,11,13 5,6

LEGEND

● Major environmental impact
○ Minor environmental impact
1 Mechanical collector
2 Wet scrubber
3 Fabric filter
4 Electrostatic precipitator
5 Afterburner
6 Catalytic oxidation
7 Furnace injection
8 Sulfuric acid recovery plant
9 Sulfur recovery
10 Ammonium sulfate recovery
11 Condenser
12 Stripper
13 Adsorber

TABLE 5-2
INDUSTRIAL WATER POLLUTANT GENERATION, IMPACT, AND TREATMENT

Industry	Sulfur Anions	Heavy Metals	Ferrous Metal	Cyanide	Nitrate	Phosphate
Aluminum refining				○		
Cement manuf.		○				
Coffee roasting						
Copper refining	○	○	○	○		
Electric power gen.						
Fertilizer manuf.	○		○		●	●
Fish canning						
Fruit canning industry						
Iron & steel production	●	○	●	○		
Lead & zinc processing	○	○		○		
Leather tanning	○	●			●	
Meat processing					○	
Mining	●	○	○			
Paint & varnish manuf.						
Petrochemical refining	●		○	●		
Petroleum refining	●		●			
Pulp & paper manuf.	●					
Sugar refining						
Textile manuf.	●					
Treatment	3,5,6,7, 8,11	3,5,6,7, 8,9	3,6,7,8, 9	6,7,8,13	2,6,7, 8	2,3,6,7,8

LEGEND

● Major environmental impact
○ Minor environmental impact
1 Mechanical or gravitational separation
2 Biological
3 Coagulation and precipitation
4 Filtration
5 Adsorption
6 Reverse osmosis
7 Ion exchange
8 Electrodialysis
9 Impoundment
10 Neutralization
11 Stripping
12 Solvent extraction
13 Oxidation
14 Cooling tower
15 Spray pond

TABLE 5-2 (Cont.)

Industry	Ammonia	Chloride	Oils	Detergents & Waxes	Phenols	BOD or COD
Aluminum refining			○			
Cement manuf.						
Coffee roasting						●
Copper refining						
Electric power gen.						
Fertilizer manuf.	●					○
Fish canning			○			●
Fruit canning industry						●
Iron & steel production	●	○			○	○
Lead & zinc processing						
Leather tanning	○	○	○	○	○	●
Meat processing			○			●
Mining						
Paint & varnish manuf.			○		○	○
Petrochemical refining	○	●	●		○	●
Petroleum refining		●	●		●	●
Pulp & paper manuf.	○		○		●	○
Sugar refining	○		○			●
Textile manuf.			○	●	○	●
Treatment	2,7,11, 13,14,16	3,6,7,8	1,3,4,5 10,11,12 13	10,13	10,11, 12,13	1,2,3, 4,13

LEGEND

● Major environmental impact
○ Minor environmental impact
1 Mechanical or gravitational separation
2 Biological
3 Coagulation and precipitation
4 Filtration
5 Adsorption
6 Reverse osmosis
7 Ion exchange
8 Electrodialysis
9 Impoundment
10 Neutralization
11 Stripping
12 Solvent extraction
13 Oxidation
14 Cooling tower
15 Spray pond

TABLE 5-2 (Cont.)

Industry	TDS	SS	Acidity	Alkalinity	Heat
Aluminum refining		○			
Cement manuf.		●			
Coffee roasting	●	●	○		
Copper refining			○		
Electric power gen.	●	●			●
Fertilizer manuf.	●	●			
Fish canning					
Fruit canning industry		●			
Iron & steel production		●	●		
Lead & zinc processing	●				
Leather tanning	●	●		○	
Meat processing		○			
Mining	●	●	●		
Paint & varnish manuf.		○			
Petrochemical refining		●	●	●	
Petroleum refining	●	●			
Pulp & paper manuf.	●	●	●	●	
Sugar refining	●	●			
Textile manuf.		●	○	●	○
Treatment	3,6,7,8	1,3,4,9	3, 16	3,6,7,8,16	9,14,15

LEGEND

● Major environmental impact
○ Minor environmental impact
1 Mechanical or gravitational separation
2 Biological
3 Coagulation and precipitation
4 Filtration
5 Adsorption
6 Reverse osmosis
7 Ion exchange
8 Electrodialysis
9 Impoundment
10 Neutralization
11 Stripping
12 Solvent extraction
13 Oxidation
14 Cooling tower
15 Spray pond

TABLE 5-3

AIR POLLUTANTS: TREATMENT PROCESSES, REMOVAL EFFICIENCIES, AND COSTS
(All costs calculated for an air flow of 1,000 liters/sec)[a]

Air Pollutant	Treatment Process	Removal Efficiency (%)	Annual Capital Cost ($)	Annual O & M Cost ($)	Total Annual Cost ($)
SO_x NO_x	Scrubber [b]	90 - 100	6,600	1,400	8,000
H_2S	Scrubber	90 - 100	6,600	1,400	8,000
Odor	Scrubber	90 - 100	6,600	1,400	8,000
Particulates	Cyclone	50-70	7,900	1,700	9,500
	Cyclone & Scrubber	98 - 100	14,500	3,000	17,500
	Filters (cloth bags)	95	6,500	1,400	7,900
	Scrubber	90 - 100	6,600	1,400	8,000
	Electrostatic precip. (hi-voltage)	100	900	6,900	39,800
NH_3	Scrubber	90 - 99	6,600	1,400	8,000
CO	Scrubber	90 - 99	6,600	1,400	8,000
F, HF	Scrubber	80 - 98	6,600	1,400	8,000
Hydrocarbons	Scrubber	80 - 98	6,600	1,400	8,000

[a] At standard temperature and pressure.
[b] There is no economically feasible and technically proven method for removing NO_x. There are, however, certain process modifications possible (such as close control of combustion time and temperature) in specific industries which can reduce NO_x generation rates.

Source: 42. Cost curves of Chapter 3, Volume II.

TABLE 5-4

WATER POLLUTANTS: TREATMENT PROCESSES, REMOVAL EFFICIENCIES, AND COSTS

(All costs calculated for a plant treatment capacity of 100 liters/sec)

Water Pollutant	Treatment Process	Removal Efficiency (%)	Annual Capital Cost ($)	Annual O & M Cost ($)	Total Annual Cost ($)
BOD/COD	Activated sludge	80-99 / 50-95	188,800	100,000-150,000	278,800-308,800
	Aeration	75-95 / 60-85	16,800	2,700	19,500
	Extended aeration	90-95 /70-90	118,000	ND[b]	ND
	Anaerobic digestion	a	75,500	22,000	97,500
	Sludge digestion	a	236,000-330,400	12,500-17,500	248,500-347,900
	Aerated lagoons	75-95 / 60-85	94,400-236,000	50,000-87,500	144,400-323,500
	Anaerobic lagoons	50-70 / 50-70	16,500-66,100	17,500-18,400	34,000-84,400
	Facultative lagoons	60-85/55-80	66,100-188,800	14,000-120,000	80,100-308,800
	Contact stabilization	90-95 / 70-80	75,500	ND	ND
	Trickling filter	60-85 / 30-70	141,600	37,500	179,100
NH_3	Aeration	50-70	16,800	2,700	19,500
	Extended aeration	60-90	118,000	ND	ND

TABLE 5-4 (Cont.)
WATER POLLUTANTS: TREATMENT PROCESSES, REMOVAL EFFICIENCIES, AND COSTS
(All costs calculated for a plant treatment capacity of 100 liters/sec)

Water Pollutant	Treatment Process	Removal Efficiency (%)	Annual Capital Cost ($)	Annual O & M Cost ($)	Total Annual Cost ($)
Suspended solids (SS)	Primary screening, grit removal	2-20	5,200-7,600	11,000-16,000	16,200-23,600
	Primary clarification	50-80	4,700-18,900	3,000-34,000	7,700-52,900
	Secondary clarification	50-80	8,500-37,800	7,200-32,000	15,700-69,800
	Two-stage lime clarification	50-80	47,200-66,100	100,000-154,000	147,200-220,100
	Coagulation and sedimentation	98	42,500	90,000	132,500
	Mixed media filtration	70-98	26,000-47,200	33,000-100,000	59,000-147,200
	Sand filtration	70-98	26,000	68,800	94,800
	Vacuum filtration	a	14,200-18,900	45,000-60,000	59,200-78,900
Oil and grease	Primary clarification	60-95	4,700-18,900	3,000-34,000	7,700-52,900
	Secondary clarification	60-95	8,500-37,800	7,200-32,000	15,700-69,800

TABLE 5-4 (Cont.)

WATER POLLUTANTS: TREATMENT PROCESSES, REMOVAL EFFICIENCIES, AND COSTS

(All costs calculated for a plant treatment capacity of 100 liters/sec.)

Water Pollutant	Treatment Process	Removal Efficiency (%)	Annual Capital Cost ($)	Annual O & M Cost ($)	Total Annual Cost ($)
Oil and grease (cont.)	Coagulation and sedimentation	80	42,500	90,000	132,500
Refractory organics, color, odor	Activated carbon adsorption	80-95	56,600-94,400	72,000-150,000	128,600-244,400
Pathogens	Chlorination	90-95	66,100-85,000	84,000-153,000	150,100-238,000
Dissolved salts (brine)	Distillation	98-99+	26,000-47,200	ND[b]	ND
	Electrodialysis	99	118,000	68,800-87,500	186,800-205,500
	Ion exchange	80-99+	236,000	275,000-1,250,000	511,000-1,486,000
	Reverse osmosis	95-99	188,800-28,300	400,000-720,000	588,800-748,300
Acidity	Neutralization	95-100	80,200	153,000	233,200
Heavy metals	Ion exchange	80-95	236,000	275,000-1,250,000	511,000-1,486,000
Phosphates	Phosphate removal	90	47,200-66,100	100,000-175,000	141,200-241
Heat	Cooling tower	[a]	2,300	700	3,000

[a] The effectiveness of these processes cannot be evaluated in terms of percentage removal. [b] ND= No Data.

Source: 42,68,69. Cost curves of Chapter 3, Volume II.

MINING

Sources of Pollutants.

There are two common techniques of mining ore: pit and shaft mining. Open pit mining is used for close-to-the-surface ore occurring in beds or large veins; it includes strip mining and quarrying. Shaft mining is for deep-occurring ore. Shafts can also be drilled into the side of a mountain to tap veins of ore.

In both types of mining, ores are cut, drilled, blasted, or crushed. The broken ore is loaded onto trucks, rails, or conveyors and taken out of the mine to a processing plant. These operations produce large amounts of particulates. Further processing, which depends on the type of ore and its grade, may include crushing and grinding (creating particulates), washing (suspended and dissolved solids, changes in pH, heavy metals), or smelting (sulfur oxides , particulates, toxic fumes). The amount and type of pollutant from each operation depends on the type of ore. Stone, sand, and gravel quarrying produces mainly particulates; chemical pollutants in air and water are not as much of a problem as with metal or coal mining. The pH of the wastewater depends also on the material mined: coal and most heavy metals cause low pH values in wastewater, while the pH of wastewater from limestone and gypsum mines is high. Salt mines cause little change in pH, but produce a large dissolved salts content in wastewater. Photograph 5-1 shows coal mine discharges causing pollution in surface waters.

Mines themselves may tend to produce water pollutants such as acid coal mine drainage. Acid mine drainage waters result from the exposure of ores to the atmosphere and to water. The chemical inorganic or bio-chemical organic reactions involved in weathering cause acids to form: the pH of drainage water can be as low as 2.5. A serious and common water pollutant is the acid waste produced when groundwater or surface water reacts with pyrite (FeS_2), in the presence of air , to produce sulfuric acid and iron oxides.[7] Pyrite is an iron ore found in high grade iron veins, and also in coal, black shale, some limestones, and in some peat bogs. Pyrite is often "concentrated" in tailings (residual ore) because it is often considered a waste material. The total amount of tailings is generally on the order of 10 kg per kg of metal product. Dumping the tailings in an area exposed to the weather may result in high concentrations of suspended solids and heavy metals as well as low pH values in water draining from the tailings pile.

Tables 5-5 and 5-6 give comparative particulate and water pollutant discharges for various types of mining. Copper mining produces about 10 times more particulates than other types of mining. Mining of heavy metals produces 100 times more suspended solids than stone or coal mining because large amounts of tailings must be separated from the ore to concentrate the metal.

Control Options.

Treatment. Air pollutants are generally treated by mechanical collectors, wet scrubbers,

Photograph 5-1

Pumped discharges from coal mines contain acids which pollute the receiving stream for uses such as irrigation, industry, fishing, recreation, and drinking water.

TABLE 5-5

PARTICULATE DISCHARGES: MINING INDUSTRY

Process	Particulate Discharges[a] (kg/kkg of product)
Iron crushing	0.7
Copper crushing	120.7
Lead crushing	10.0
Zinc crushing	18.0
Bauxite crushing	12.0
Gypsum milling	20.9
Coal cleaning	9.0 - 12.5
Stone quarrying	8.5
Sand & gravel quarrying	0.05
Phosphate rock quarrying	18.5

[a] For 1971 or most recent available information.

Source: 68.

TABLE 5-6

WATER POLLUTANT DISCHARGES: MINING INDUSTRY

Ore	Water Use	Pollutant	Amount of Pollutant
Metals	Process water	Suspended solids	10 kg/10^6 liters of water[a]
Coal	Process water	Suspended solids	0.01 kg/10^6 liters of water
Stone	Process water	Suspended solids	0.01 kg/10^6 liters of water
Coal	Drainage	Acid (as $CaCO_3$)[c]	0.092 kg/kkg coal[b]
		Total Fe	0.032 kg/kkg coal
		Fe^{++}	0.009 kg/kkg coal
		SO_4	0.28 kg/kkg coal
		Ca (as $CaCO_3$)[c]	0.055 kg/kkg coal
		Mg (as $CaCO_3$)[c]	0.041 kg/kkg coal

[a] Estimated.

[b] Calculated from 5 areas as mean value.

[c] Weight of substance as equivalent weight of $CaCO_3$.

Source: 68.

and fabric filters. Such methods of control are applicable only to point sources such as ore processing plants and mine vents. Open-pit mines are less subject to conventional air pollution control, but particulate concentrations are not as high as with shaft mines. Filters are generally more practical for collecting dust escaping through mine vents, while the more complicated methods, such as wet scrubbers, are generally used for controlling emissions from processing plants.

Water pollutants are treated by neutralization, sedimentation, reverse osmosis, electrodialysis, crystallization, ion exchange, and distillation.

Neutralization of wastewater is usually done by limestone or lime followed by sedimentation to remove suspended solids and precipitates. The advantages of using limestone over lime are lower chemical costs, decreased hazard, little to no effect on receiving waters and aquatic life from the effluent, and the potential to decrease sludge volume. The advantages of neutralization are that, as the pH is increased, the wastewater becomes less corrosive and iron, aluminum, and manganese are removed. The disadvantages are increased hardness, non-removal of sulfate, and doubling (approximate) of sludge volumes.

Reverse osmosis reduces iron and sulfate ion concentration and hardness by 95-99 percent. It must be preceded by sedimentation to remove suspended solids so that the osmotic membranes are not fouled. The addition of a base to reduce acidity is also done as a pretreatment (total dissolved solids may be reduced to 50 mg/liter). It is possible for the iron to react with oxygen to form a precipitate of iron oxides that will also foul membranes. This fouling is controlled by a 5 percent solution of sodium hydrosulfite. An advantage of reverse osmosis is that it yields a high quality, partially demineralized effluent. Disadvantages of reverse osmosis include the requirements of pretreatment to control fouling from suspended solids and organisms, post-treatment to raise and neutralize a low pH effluent, comparatively high costs, and the difficulties of brine disposal.

Electrodialysis is also useful in demineralizing wastewater, which may require pretreatment, to remove organics, iron, manganese, sediment, and microorganisms. Disadvantages associated with electrodialysis are calcium sulfate precipitation, comparatively high costs, and the need to dispose of the residual brine.

Crystallization treats wastewater by repeated partial freezing to produce ice crystals which are separated from solution in a solid-liquid separation system. Disadvantages for this process are brine disposal, cost, and ice separation. Treatment efficiencies of removal range from 90 to 99 percent.

Ion exchange is the process by which pollutant ions in the wastewater are exchanged with ions occurring naturally or artificially on a resin. When the supply of exchangeable ions is exhausted in the resin, it must be replaced or regenerated. After regeneration of the resin with new ions, the pollutant ions are in a concentrated brine solution. Removal efficiencies can be high but are variable (see Chapter 3). Problems which occur with the use of this process are pretreatment to remove organics, cost, brine disposal, regeneration, ion fouling, and precipitate formation.

Distillation is the process of evaporating water from the contaminated wastewater. The process variations range from electrical flash evaporation to solar evaporation. Although this process is effective for demineralizing wastewater, the disadvantages include brine disposal, high cost, maintenance, and corrosion of mechanical equipment.

Reuse. Tailings may be a significant reusable waste product. Tailings can be reused as backfill to seal non-productive areas of the mine, as a compacted fill material for foundations, or as road material. Wash water can be reused after removal of suspended solids in settling ponds. When large and continuous water supplies (rivers, etc.) exist near a mine, recycling wastewater may be justified for pollution control.

Mine equipment has a comparatively short life. The floors of mines are often littered with piles of scrap metal, worn-out trucks, and rusting tools. This discarded equipment often impairs backfill and land restoration operations. The scrap may be profitably recovered and recycled through sale to scrap metal dealers.

Prevention. Reduction of air pollution requires good management, due to the nature of the operation. Possibilities also exist for limiting water pollution by preventing or controlling wastewater effluent discharges.

Prevention of water pollution, especially acid drainage, depend on the ability to seal mines or prevent prolonged exposure of the ore or residues to both air and water. This can be accomplished by: sealing all entrances to shaft mines; flooding mines to prevent exposure to air; backfilling strip mined areas when ore removal is no longer feasible; filling shaft mines with tailings or flyash; improving water drainage to divert the water from freshly cut faces; or revegetating backfilled areas to prevent erosion and reduce seepage through the surface.

Reclamation of strip-mined areas requires a source of funds to guarantee revegetation or other restoration after completion of mining operations. This may be achieved through bonding or setting aside special funds at the beginning or during the life of the strip mine operations. Recovery can be planned in incremental stages as completed areas become available. The following steps are common in a revegetation program: 1) stockpile removed topsoil for later use; 2) replace drainage pattern to avoid erosion; 3) regrade land to conform with desired topography; 4) replace stockpiled topsoil, or provide new topsoil either by importation or creation with organic soil conditioners such as appropriate industrial or sewage sludges; 5) replant and irrigate as necessary to establish the vegetation growth. (See Photograph 5-2.)

The effectiveness of the above methods vary, as summarized in Tables 5-7 and 5-8.

Photograph 5-2

Aerial view of strip coal mining operation. This land can be recovered for farm, parkland, or other uses by regrading, applying sludge or topsoil, and replanting.

TABLE 5-7

DRIFT AND SHAFT MINE
ACID POLLUTION CONTROL METHODS

Control Method	Estimated Effectiveness	Factors Determining Effectiveness
Mine flooding	50-90	Complete and permanent flooding of pyrites, sound engineering, knowledge of mine, may be a safety problem in above-drainage mines.(Two types of flooding are: natural flooding of below-drainage mines, and flooding of below and above drainage mines.)
Mine sealing to prevent water entrance	25-90	Ability to locate and seal all water passages to mine.
Mine sealing to prevent air entrance	10-60	Ability to locate and seal all air paths to mine workings.
Control and rapid removal of water within mine (active mining)	25-60	Characteristics of material in mine and rate of removal.

Source: 80.

TABLE 5-8
SURFACE MINE
ACID POLLUTION AND EROSION CONTROL METHODS

Control Method	Effectiveness (%) [a]	Factors Determining Effectiveness
Water diversion (active & inactive mines)	75-95	Ability to direct as much water as possible in a properly designed structure.
Rapid removal of water	25-75	Characteristics of the spoil and the amount of time water is in contact with spoil.
Burying toxic material in final cut	50-85	Characteristics of the spoil material and placement.
Flooding of toxic material in final cut	50-95	Complete and permanent covering of toxic material.
Regrading to facilitate the rapid movement of water away from workings	25-75	Characteristics of the spoil and slope of land.
Revegetation (for erosion control)	10-95	Type of cover, (grass is better than trees), soil conditioning, and the extent of cover.

[a] Estimated values

Source: 80.

ALUMINUM REFINING

Sources of Pollutants.

The first stage of aluminum refining involves removal of alumina (aluminum oxide) from bauxite ore (Figure 5-1). The raw ore is first ground and mixed with caustic soda solution; this produces particulates and dissolved solids. The mixture is fed into pressurized vessels where steam is injected at high temperature and pressure; this releases the alumina from its hydrous state in the raw ore and converts it to a soluble salt. Steam generation and alumina removal produce particulates and fluoride gases; the remaining sludge contains ferric oxide and dissolved solids. After filtering out the undesirable compounds, the aluminum salt is precipitated out as alumina. The precipitation produces particulates and fluoride gases. The alumina is washed and filtered, producing dissolved solids and ferric oxide.

In stage two the alumina is converted into pure aluminum. The alumina is reduced to aluminum metal by electrolysis (Figure 5-2). Cryolite (a sodium-aluminum-fluorine mineral), calcium fluoride, and aluminum fluoride are mixed with the alumina at high temperatures in electrolytic cells, where the aluminum metal is separated in molten form. The assembly of these cells includes anode manufacture during which particulates, fluorides, and sulfur oxides are emitted as air pollutants. (Cathode manufacture causes no pollutant discharge.) The process of electrolysis itself produces carbon monoxide, particulates, fluoride compounds, and sulfur oxides. Water pollutants generated during electrolysis are dissolved and suspended solids, ferric oxide, BOD, and an unbalanced pH.

In stage three after extraction of the aluminum, gases are removed and the aluminum is cast in bars or ingots. Degassing produces particulates and sulfur oxides; casting generates BOD, dissolved solids, and acid wastes.

Control Options.

Treatment. Air pollutants can be controlled by wet scrubbers, electrostatic precipitators, fabric filters, or cyclone separators. The fluorides can be effectively treated by spray towers, floating-bed scrubbers, self-induced spray, dry alumina adsorption, or fluidized bed dry scrubbers.

Water pollutants such as TDS and ferric oxides are effectively treated by ion exchange, reverse osmosis, coagulation, electrodialysis, and activated carbon. All of these treatments assure about a 95-100 percent removal efficiency. Suspended solids are best treated by lagooning or ponding. BOD is also effectively treated by lagooning, either anaerobically or aerobically.

Reuse. There are no proven feasible reuse procedures for the treated pollutants.

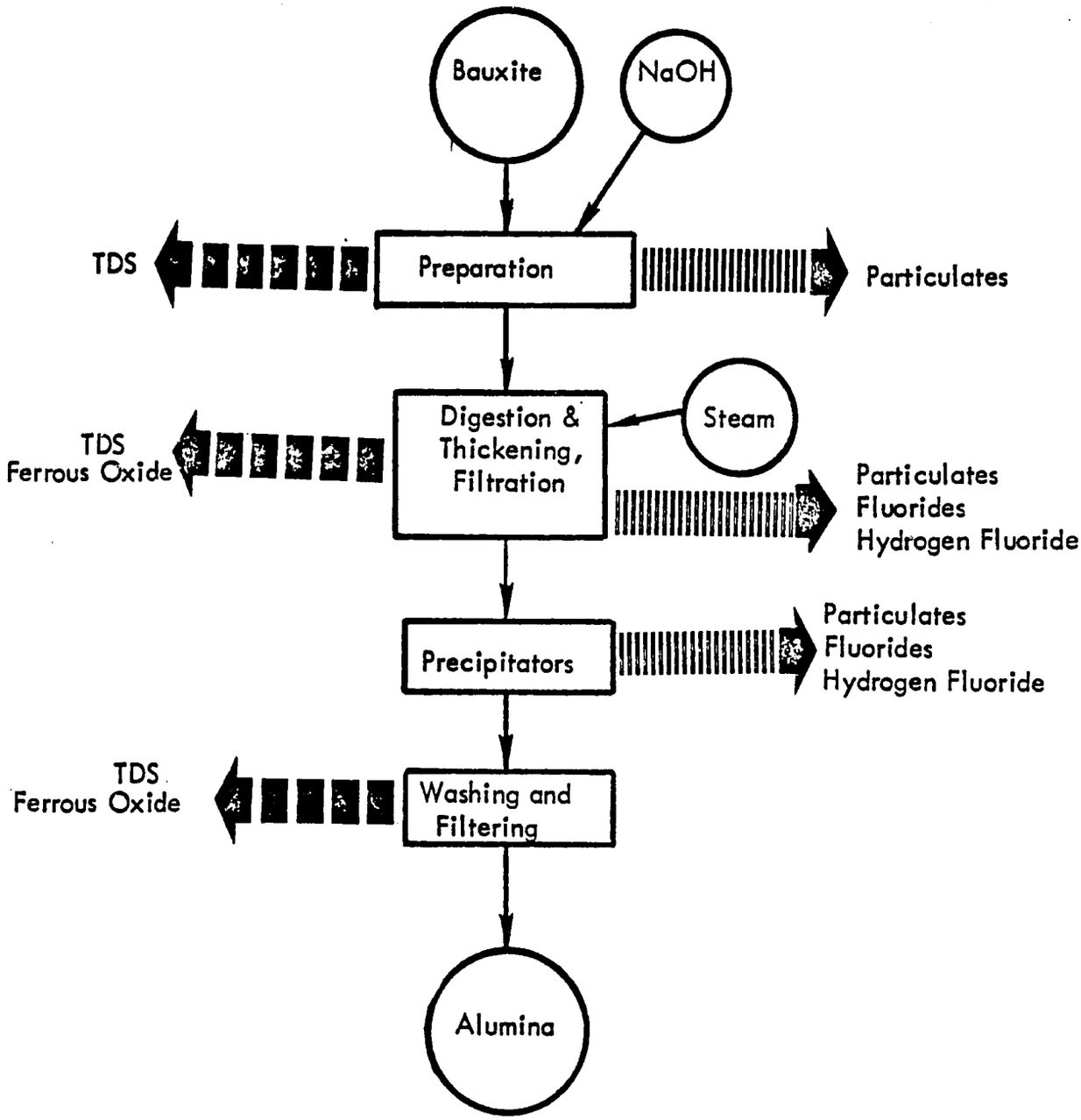

LEGEND

Water Pollutants

Air Pollutants

FIGURE 5-1
BAUXITE PROCESSING

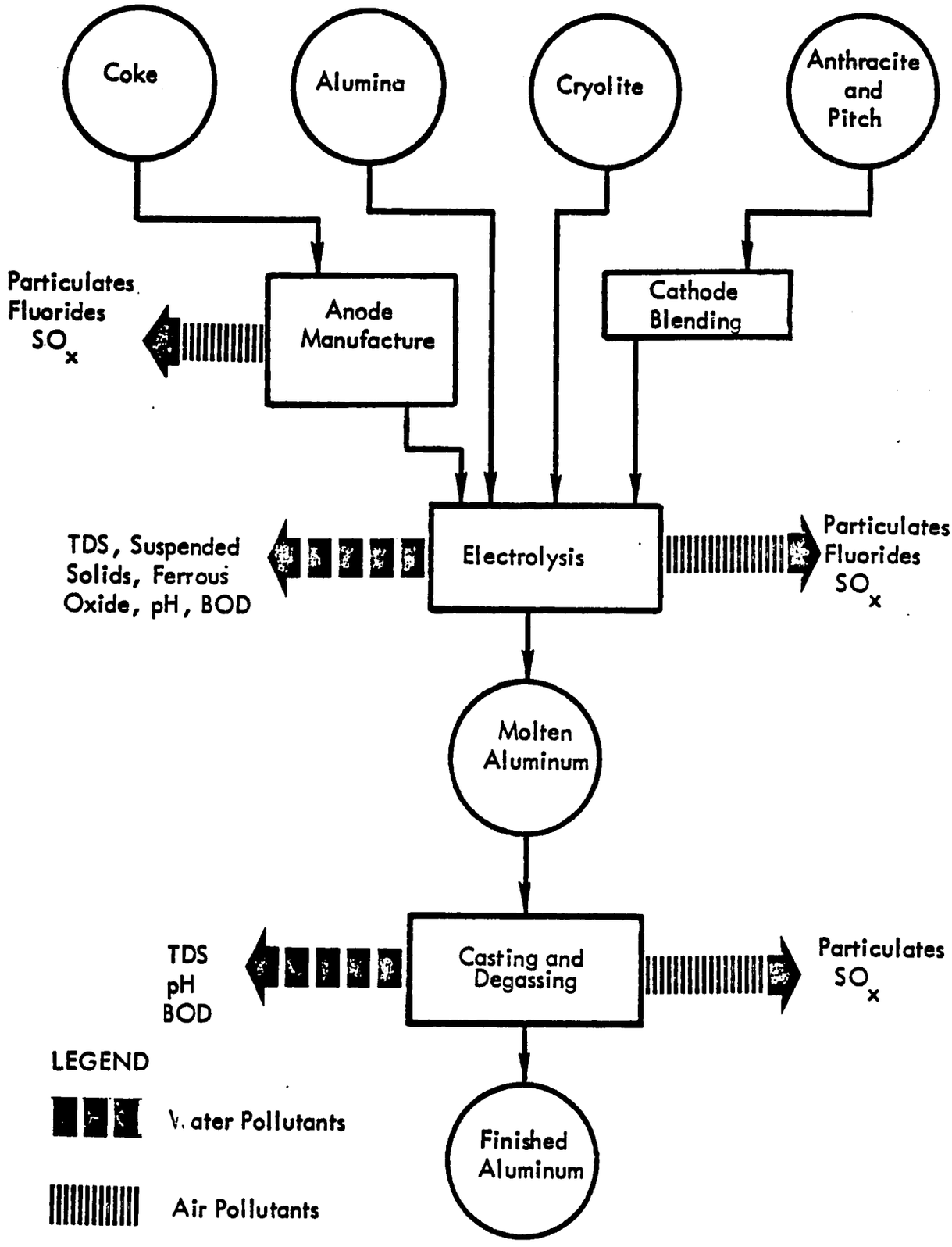

FIGURE 5-2
ALUMINUM REFINING

Prevention. New process technologies now under development for the Bayer alumina production and Hall-Heroult electrolytic reduction processes may reduce both energy needs and environmental impact. Their use is considered a long-term prospect due to the need for industry-scale testing, and the high capital cost of converting conventional plants to the new methods. Other promising long-term approaches include changes in the smelting process, and use of the chloride "closed-loop" process which may reduce energy needs as much as 30 percent. Shorter and intermediate-term energy-reducing possibilities include special electric melting furnaces, and computer scheduling (which has already been helpful).

The recovery and recycling of new and old scrap aluminum may be greatly increased through: 1) improved technology in alloy collection and segregation, refining, recycling of composite materials, and contaminant removal from and reuse of dross; and 2) better statistics on the cost-benefits of recycling.

COPPER REFINING

Sources of Pollutants.

Copper metal is obtained by a four-stage process of sintering/roasting, smelting, converting, and refining. The ore is roasted and sintered in a multi-hearth or fluidized bed furnace. The air pollutants generated by this process are particulates and sulfur oxides. The water pollutants are suspended solids, dissolved solids, and alkalinity. After the sulfur is removed by roasting, the ore is calcined as preparation for smelting by a reverberatory furnace. Air pollutants consist of particulates and sulfur oxides. Water pollutants are the same as those produced by sintering and roasting. In the furnace the other impurities are removed as a slag with the aid of a flux, and a matte (metal sulfate) is left. Air is blown through the molten matte in the converter to remove sulfur (as sulfur dioxide). The air pollutants generated are particulates and sulfur oxides; water pollutants are alkalinity, suspended solids, and dissolved solids. From the converter the material is ready for consumption as a blister copper or to be cast and refined. Dissolved and suspended solids are the only pollutants generated by the casting and refining stage. The final product is copper or copper alloy. The copper refining process schematic with the associated pollutants is shown in Figure 5-3.

Control Options.

Treatment. Particulates are best treated by a wet scrubber, an electrostatic precipitator, a fabric filter, or a cyclone separator. Sulfur oxides can be controlled by a sulfuric acid recovery process (converting sulfur dioxide to sulfuric acid) or by a sulfur recovery process (converting sulfur dioxide to elemental sulfur). Limestone scrubbing can precipitate sulfur in the stack gas as calcium sulfate for recovery and ponding. Other options include ammonium sulfate recovery and caustic scrubbing plus sodium sulfate recovery.

Suspended solids in water are removed with the use of a settling lagoon or pond. Other pollutants can be controlled by reverse osmosis, ion exchange, coagulation, distillation, electrodialysis, or activated carbon. Alkalinity can be effectively treated by pH control including coagulation.

Reuse. Because of the nature of the pollutants generated by the production of copper, there are as yet no proven feasible uses or reuses for the treated pollutants.

Prevention. Improved smelting processes may permit better recovery of sulfur and particulate emissions. For example, a copper refinery built in 1915 has replaced its old fuel-fired reverbatory smelting furnace with an electric furnace which allows 100 percent of the process gases to pass through a double-contact sulfuric acid plant. This is considered the best currently available system for capturing sulfur air pollutants. SO_2 and particulate emissions from the company's smelter operations have been cut more than 90 percent, and visible air pollution has been virtually eliminated.[75]

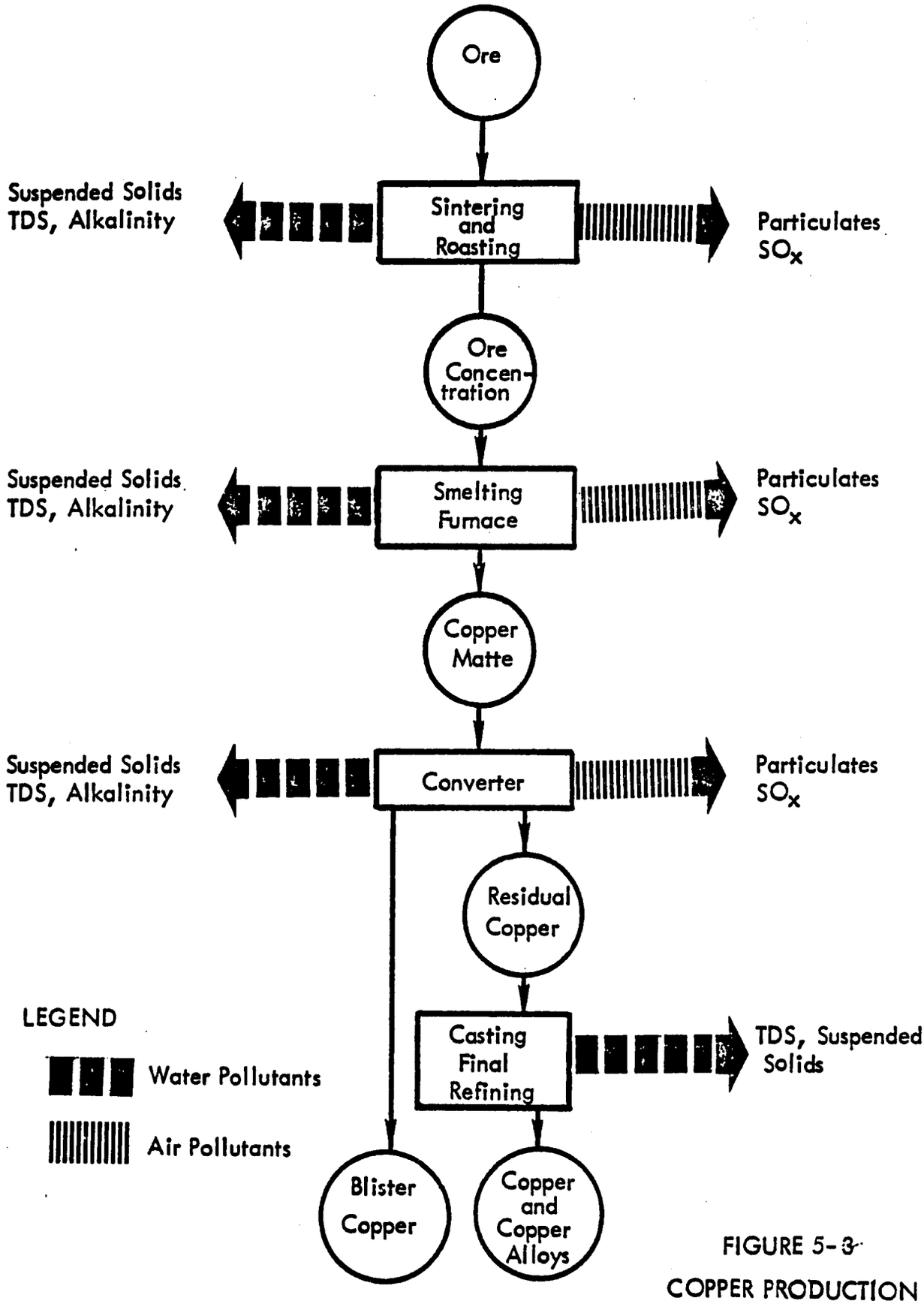

FIGURE 5-3
COPPER PRODUCTION

LEAD AND ZINC PROCESSING

Lead and zinc frequently occur in the same ore and are, therefore, processed together. The first process steps, gravitation and flotation, concentrate the ore and remove impurities. Air pollutants generated are particulates due to crushing ore. The water pollutants generated are suspended solids, TDS, and iron. The concentrated ores are then sintered, crushed and roasted to purify them further. These steps generate particulate and SO_x air pollutants, but no water pollutants. Three sequential steps are used to obtain zinc metal from the ore: distillation, conversion to zinc sulfate, and electrolytic reduction.

Lead is fired directly in the blast furnace and refining furnace. Air pollutants consist of particulates and SO_x. Water pollutants include heat and blowdown. The industrial schematic is shown in Figure 5-4.

Control Options.

Treatment. Particulates are best treated by a wet scrubber, an electrostatic precipitator, a fabric bag filter, or a cyclone separator. Sulfur oxides can be controlled by a sulfuric acid recovery process which converts sulfur dioxide to sulfuric acid, or by sulfur recovery to convert sulfur dioxide to elemental sulfur. Limestone scrubbing can precipitate sulfur in the stack gas as calcium sulfate for recovery and ponding. Other options include ammonium sulfate recovery and caustic scrubbing with sodium sulfate recovery.

Suspended solids in water are removed with the use of a settling lagoon or pond. Total dissolved solids and other pollutants may be controlled by reverse osmosis, ion exchange, coagulation, distillation, electrodialysis, or activated carbon.

Reuse. The recovery methods available involve the sulfuric acid or elemental sulfur recovery systems, as described under Treatment.

Prevention. There are no economical process modifications currently available which are capable of significantly reducing pollution generation.

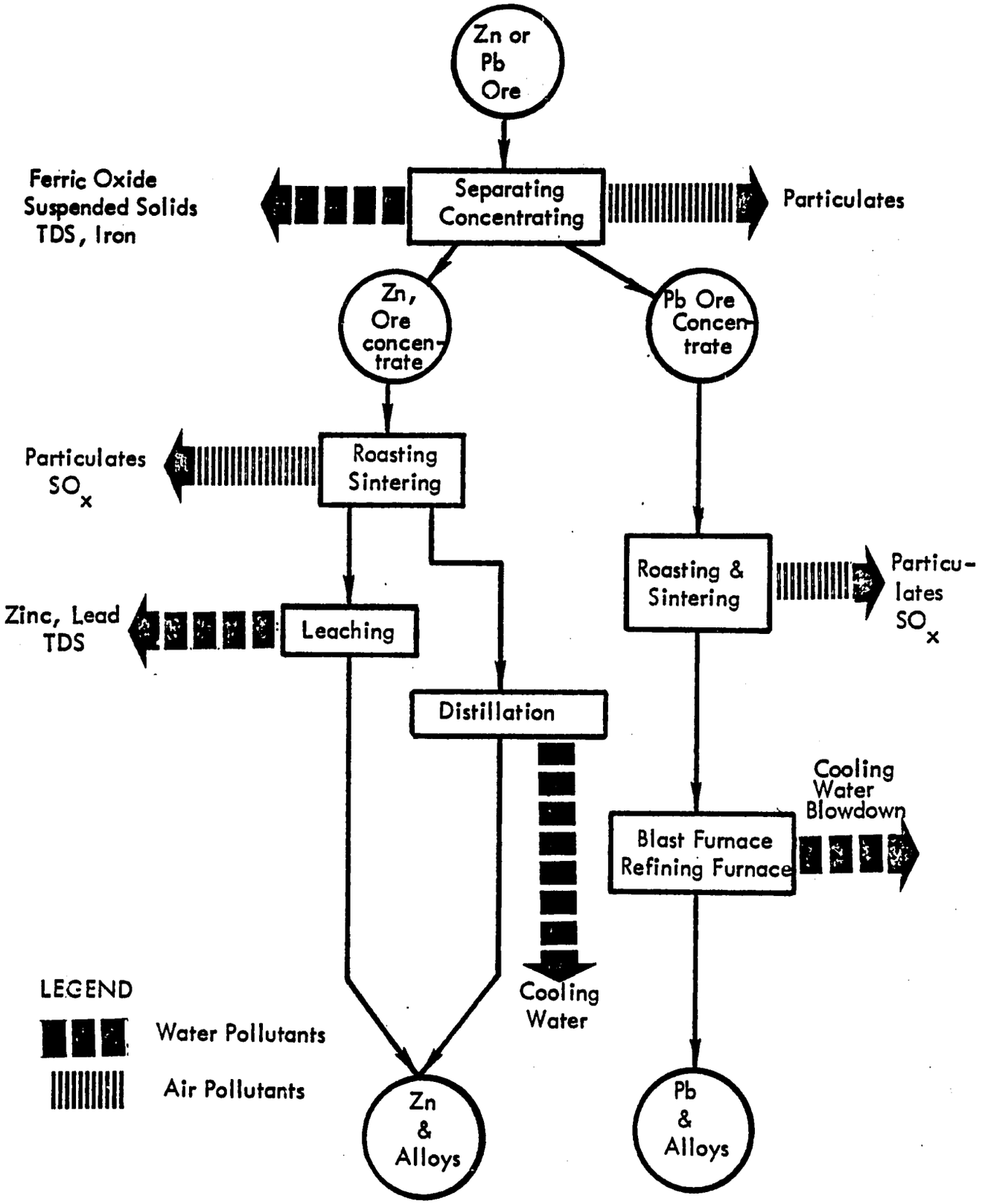

FIGURE 5-4
ZINC AND LEAD PRODUCTION

CEMENT MANUFACTURING

Sources of Pollutants.

Cement is produced by both wet and dry processes. The industrial schematic is shown in Figure 5-5 . In the dry process, the raw materials are crushed, proportioned, and mixed. These steps generate particulates. In the grinding step which follows mixing, additional particulates are generated; this stage is a major contributor of air pollutants. The material is further homogenized during the blending stage, and particulates are again produced. After blending, the material is ready for the kiln, where it is heated to form clinkers (fused, non-combustible material remaining after heating). The kiln is the greatest producer of particulates in the entire process. The clinker, after cooling, is ground, generating additional particulates. The finished cement is then ready for cooling and packaging. Nowhere in this processing do water pollutants necessarily occur. Atmospheric transport and precipitation can wash out particulates.

In the wet process, water is added during the proportioning and mixing and grinding stages. The resulting pollutants are SS, TDS, alkalinity and, if the raw material contains them, sulfates and potassium.

Sometimes it is desirable to recover the dust from the wet slurries, in which case a leaching operation is necessary to remove any soluble alkalies. Kiln dust which is recovered for reuse is leached with water to remove soluble alkalies.

Control Options.

Treatment. Particulates produced in cement manufacture are frequently removed by cyclones or cyclones with wet scrubbers. Cyclones are capable of removing about 75 percent of the particulates, and in combination with a wet scrubber,efficiencies reach 90 percent. Other equipment which performs satisfactorily includes paper and fabric filters, inertial separators, gravity settling chambers, and electrostatic precipitators. If higher efficiencies are desirable,the electrostatic precipitator will give almost complete (99 percent) removal. Advantages of cyclones and scrubbers are their relative trouble-free operation, durability, and low operating costs. The initial cost of electrostatic precipitators is high and they do not remove gases, but operating costs are relatively low.

Reuse. Where technically and economically feasible, all particulates from cement production are recycled within the production sequence.

Prevention. Because of the nature of the materials involved, there appear to be no technically feasible and economically viable process alternatives capable of significantly reducing pollutant emissions.

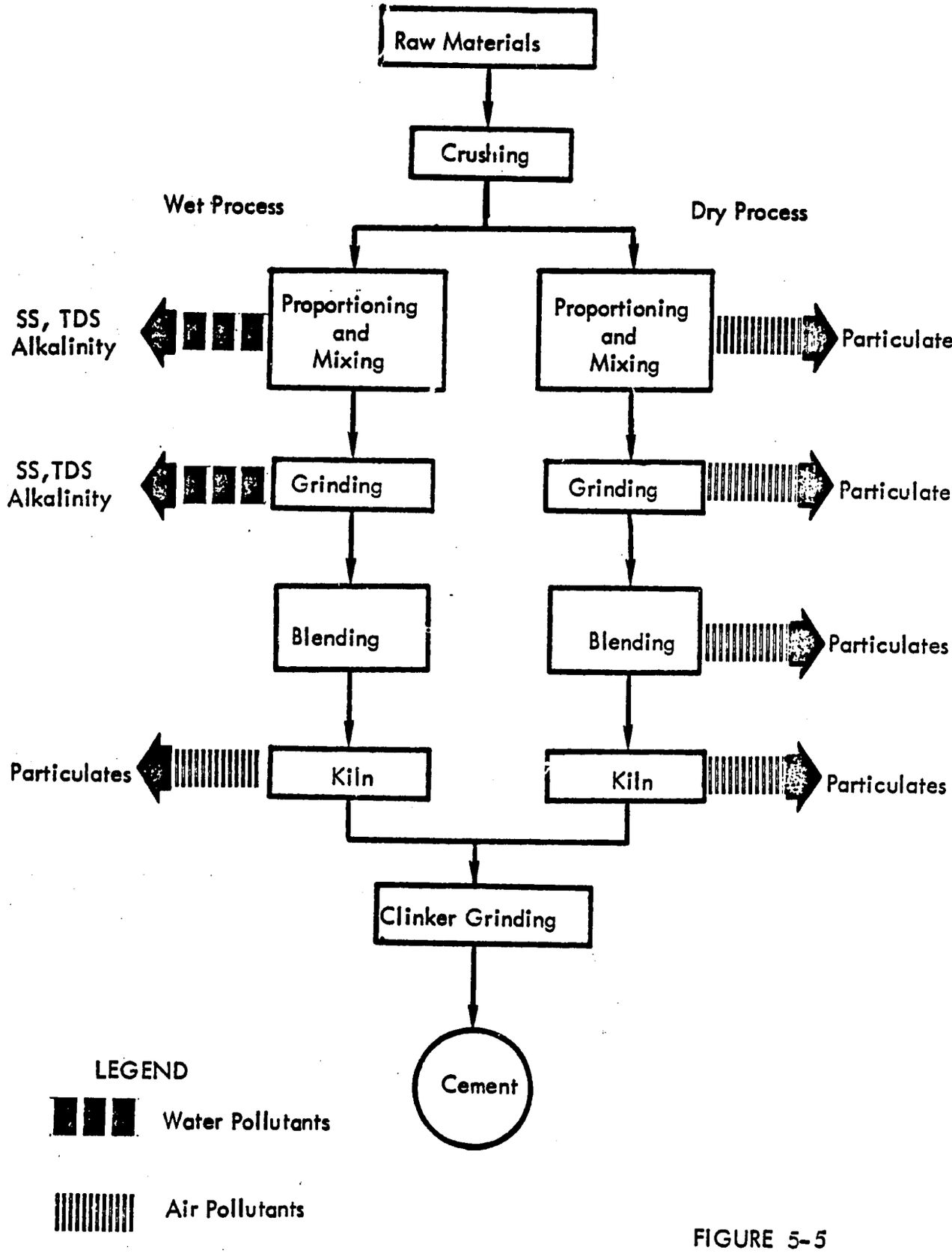

FIGURE 5-5
CEMENT PRODUCTION

PAINT AND VARNISH MANUFACTURING

Sources of Pollutants.

Paint. Paint is produced by grinding pigments and combining them with various solutions. The process flow sheet is shown in Figure 5-6 . Raw materials are usually mixed, then ground; some processes, however, combine the mixing and grinding stages. Air pollutants consisting of particulates are generated at this process stage. Water pollutants are negligible. After mixing and grinding, the material is diluted, thinned, tinted, and packaged. Solvents may contribute air pollutants.

Varnish. Producing varnish is a simple operation, involving little more than blending and heating. Varnish is essentially a mixture of a binder, solvent, and additive. No pigment is added. The industrial schematic for varnish is shown in Figure 5-7 .

The blended raw materials are heated while being slowly and continuously mixed. The air pollutants generated during this step are fumes and odors. There are no water pollutants. The varnish passes from the thinning stage to the clarification process for removal of dirt and foreign material. This produces no air or water pollutants. Solid waste residues include the dirt and foreign matter from the clarification process.

Control Options.

Treatment. Particulates produced in paint production are fairly effectively and inexpensively removed by a cyclone separator. Other control options include electrostatic precipitators, cloth filters, and scrubbers. These other options are 90 to 99 percent effective but are more expensive to operate. The scrubber has the disadvantage of producing a wastewater which requires additional treatment. Fumes and odors are treated best by an afterburner, but this is costly and produces some air pollutants. An effective method of eliminating fumes and odors is the use of a water bath. This is less expensive and easier to maintain. The residues from paint and varnish production and pollution control (particulates, dirt, foreign matter) are mostly inert and can be disposed of to a secure landfill without further processing.

Reuse. There are no proven uses for the residues from either the paint or varnish production processes.

Prevention. There are no currently available process modifications capable of reducing pollution generation that are also economically and technically feasible.

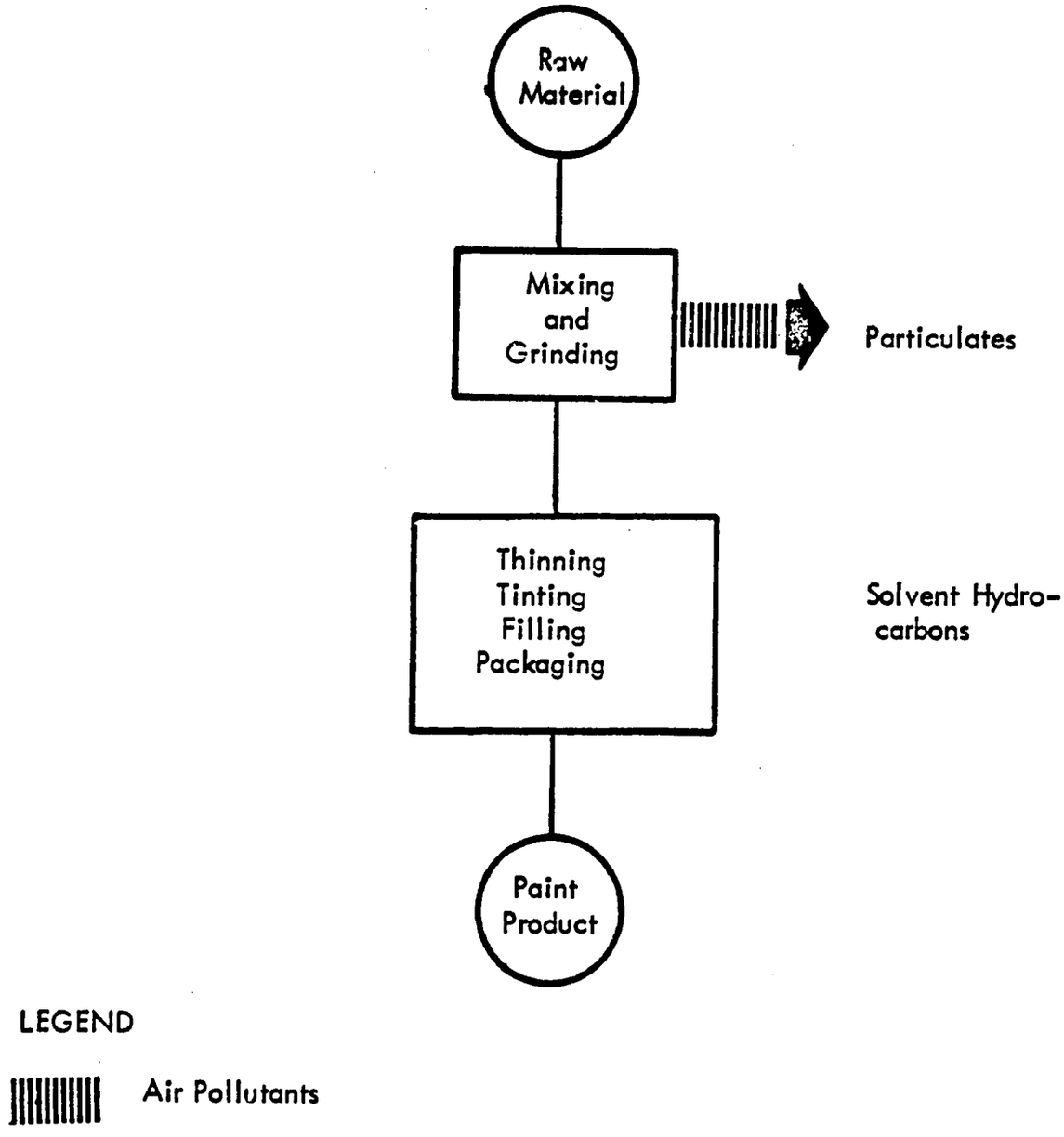

FIGURE 5-6
PAINT PRODUCTION

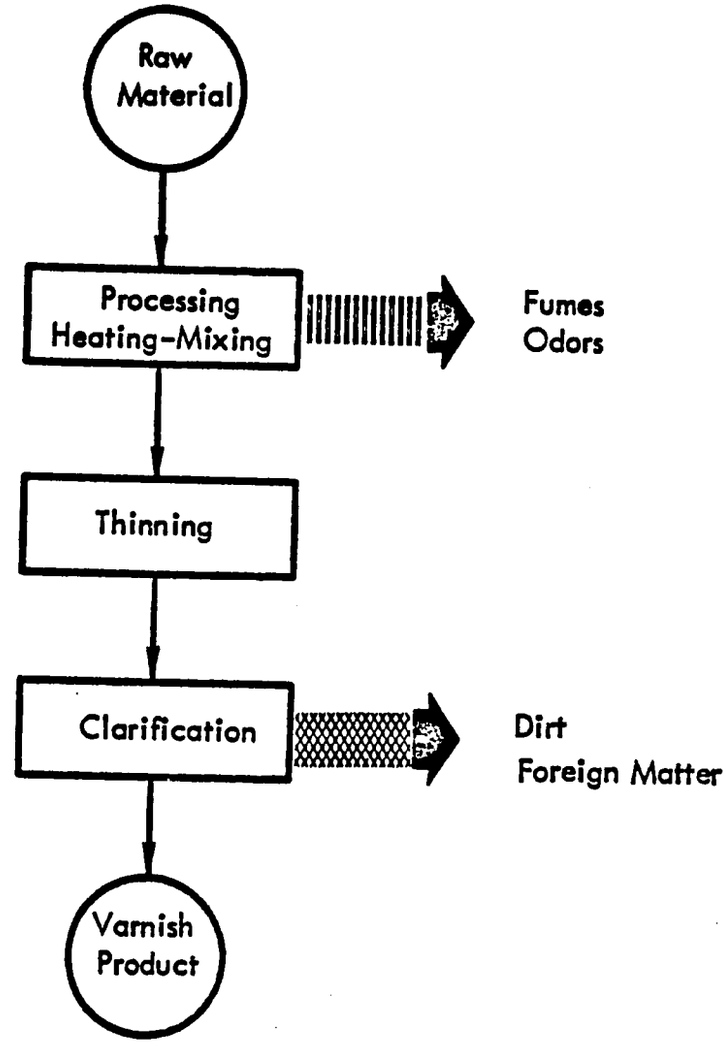

LEGEND

Air Pollutants

Residues (solids)

FIGURE 5-7
VARNISH PRODUCTION

FERTILIZER MANUFACTURING

Sources of Pollutants.

The fertilizer industry produces three main types of fertilizers: nitrogen, phosphate, and potash (potassium oxide). These are either mixed together in various proportions (with clay as a binding agent), or sold separately. The amount of each in the final mixture is usually not more than 20 percent by weight.

Nitrogen fertilizers are produced by reacting ammonia (NH_3) with other compounds; ammonium nitrate ($NH_3 + H_2NO_3$), ammonium sulfate ($NH_3 + H_2SO_4$), and urea ($NH_3 + CO_2$) are some of the common nitrogen fertilizers. Ammonia production commonly begins by reacting natural gas with steam. The natural gas is the source of hydrogen for ammonia; the reaction liberates the hydrogen to be reacted with atmospheric nitrogen in the NH_3 converter (a separate reaction chamber); CO_2 gas is given off, but is not considered a pollutant. The ammonia is liquified or combined with other products in other reaction chambers to form the final fertilizer. Figure 5-8 is a schematic of the nitrogen fertilizer production process.

Water pollutants are generally the major problem, although some air pollution (particulate, NH_3 and NO_x) may be produced in the final step where ammonia is reacted with other compounds to produce the final product. The pollutants from boilers are the result of burning fuel. Condensate and heated cooling water are the result of heat exchange processes. Wash water is contaminated with ammonia, sulfur compounds, oil, and various organic compounds in varying proportions (see Table 5-9). Since fertilizers are nutrients, high BOD levels are characteristic of wash waters. Discharge of untreated wash waters can contribute to eutrophication of natural waterways.

Phosphate fertilizers are produced from phosphate rock, mainly apatite ($Ca_5(PO_4)_3(F,Cl,OH)$). Phosphate rock is reacted with acid additives in a reaction chamber, or heated in a furnace. The reacted product is finished by concentration, drying, and granulation. Air pollutants arise from impurities in the phosphate rock, producing mainly fluorides, SO_x, particulates, and chlorides. Wash waters contain fluorosilicic acid, phosphates, suspended solids, and high levels of BOD and COD. Storage of phosphate rock in piles open to the weather will result in contaminated runoff. Slag is a solid waste residue from furnaces only. Figure 5-9 is a schematic of the phosphate fertilizer production process.

Potash (K_2O) fertilizers are produced from sylvite ore (KCl). The sylvite often occurs with halite (NaCl) and other salts, and is separated from these without major chemical addition on the basis of differing physical properties. The sylvite can be floated and centrifuged while the other salts are dissolved. Separation can also be accomplished by dissolving the unrefined ore mixture in hot water. Cooling the water lowers the solubility of sylvite and pure KCl crystals are removed. The pure KCl is reacted with additives to produce potash. Figure 5-10 is a schematic of the potash fertilizer production

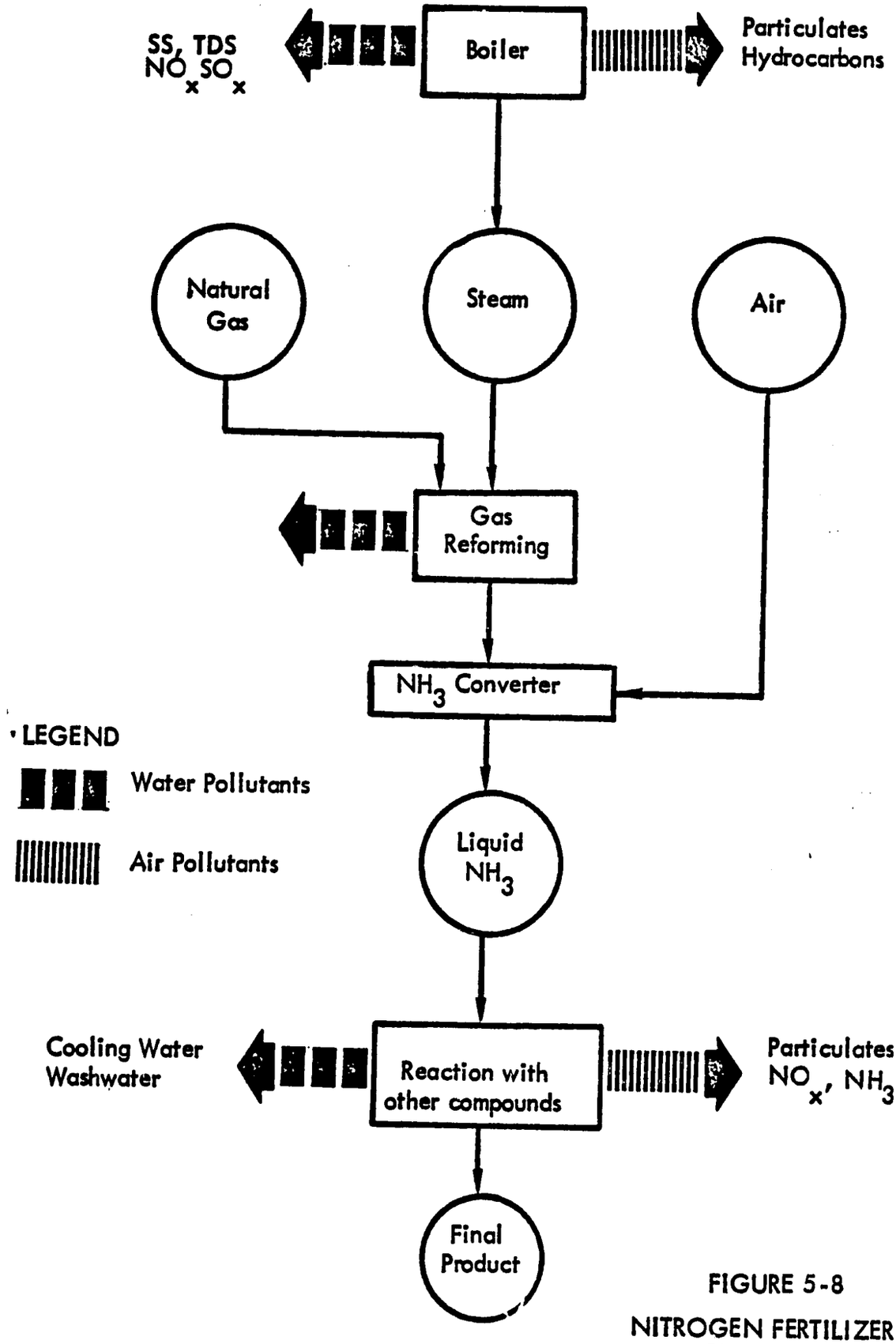

FIGURE 5-8

NITROGEN FERTILIZER PROCESSING

TABLE 5-9

PRINCIPAL WATER POLLUTANT DISCHARGES: NITROGEN FERTILIZERS

Waste Volume and Contaminant	Aqueous Processes Waste Streams					
	Ammonia Plant	Ammonia Plant Cooling Water Blowdown	Urea Plant	Urea Plant Boiler Water Blowdown	Ammonium Nitrate Plant	Ammonium Sulfate Plant
Volume (liters/kkg product)	417-4,172	1,669-4,172	209-8,344	83- 417	209-5,006	417-41,720[a]
Contaminants (mg/liter)						
NH_3	20- 100	10- 100	200-4,000	--	200-2,000	10 -1,000[a]
CO_2	150- 750	--	100-1,000	--		--
NO_3	--	--	--	--	50-1,000	--
SO_4	--	500-5,000	--	--	--	5 - 500[a]
Sulfite	--	--	--	0- 100	--	--
PO_4	--	0 - 50		5- 50	--	--
F	--	0 - 10	--	--	--	--
Zn	--	0 - 30	--	0 - 10	--	--
Heavy metals	--	0 - 60	--	0 - 10	--	--
Oil	100-10,000	10 - 1,000	10- 100	--	--	--
COD	60 - 200	15 - 400	50- 500	--	20	20
BOD_5	50 - 150	10 - 300	30- 300	--	20	20
Urea	--	--	50-1,000	--	--	--
MEA[b]	50 - 100	0 - 10	--	--	--	--
Alkalinity	--	--	--	50- 700	--	--
Hardness	--	--	--	50- 500	--	--
TDS	--	500-10,000	--	500-3,500	--	--
SS	--	--	--	50 - 300	--	--
Biocides	--	0 - 200	--	--	--	--
Organics	--	0 - 100	--	0 - 200	--	--

[a] Wide range due to possible recycle of aqueous scrubber solutions.
[b] Monoethanolamine.

Source: 90.

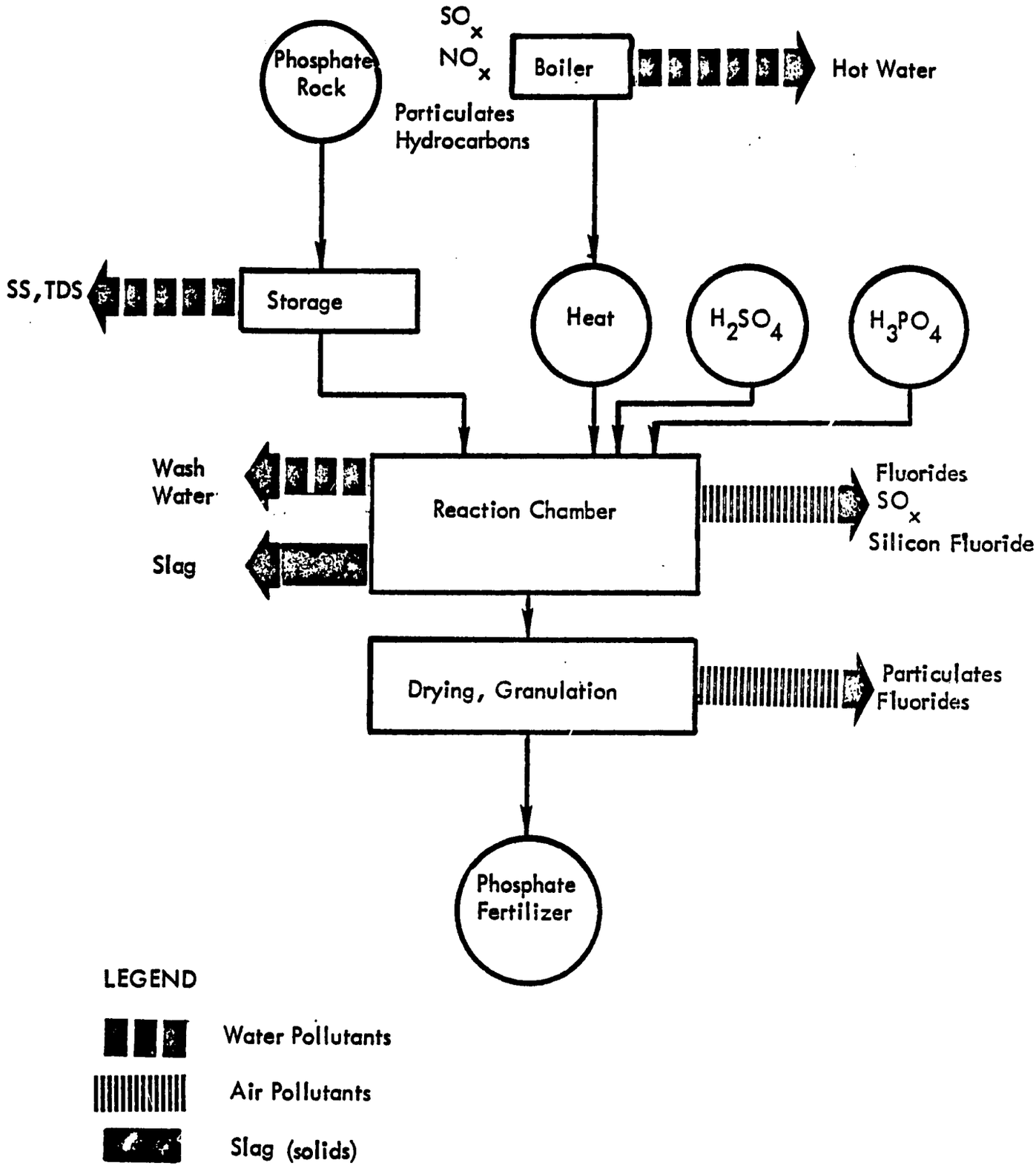

FIGURE 5-9
PHOSPHATE FERTILIZER PROCESSING

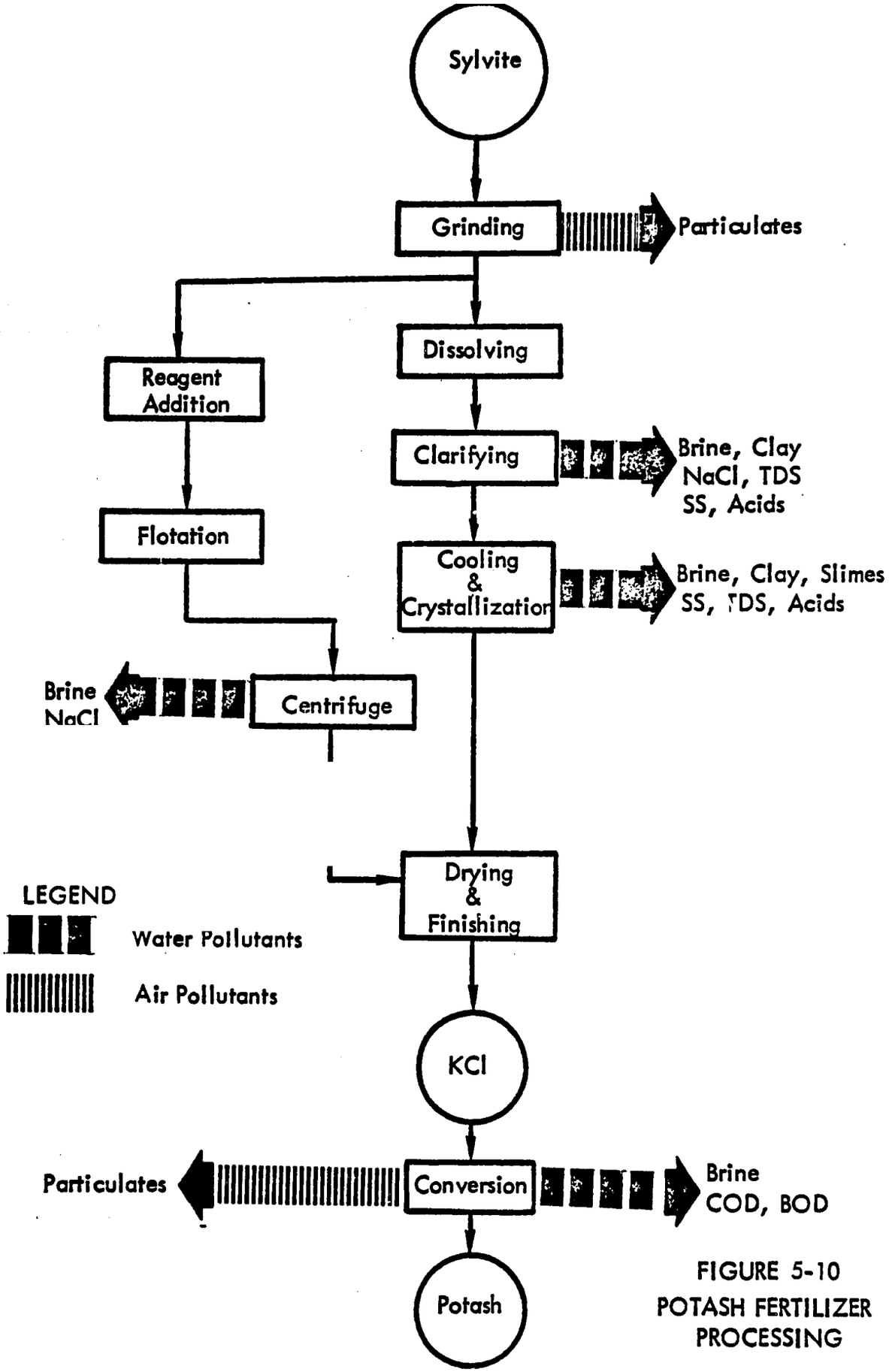

FIGURE 5-10
POTASH FERTILIZER PROCESSING

process. Air pollutants are produced from grinding in the initial steps and in the final reaction steps and are mainly particulates. Water is used as the medium in which the impurities are carried away. Major water pollutants are acids, salts, suspended solids, and BOD and COD.

Control Options.

Treatment. Air pollutants, consisting mainly of particulates, can be removed by electrostatic precipitators, scrubbers, and mechanical methods. Scrubbers have the advantage of also removing harmful gaseous emissions, such as fluorides, SO_x, and ammonia, NO_x, etc.

Removal of nutrients (fertilizers) and suspended solids from wastewater streams can be achieved by biological treatment followed by sedimentation. Various biological treatment systems are activated sludge, aerated basins, facultative lagoons, and trickling filters. These systems have varying degrees of efficiency. Methods of removing suspended solids are sedimentation, coagulation, filtering, and clarification, in increasing order of efficiency and cost. Oil and grease can be removed by coagulation or flotation. Other additives may have to be used to remove heavy metals, fluorides, and other impurities present in the phosphate ores, and to adjust pH levels to around 7. Cooling of the warmed condenser and cooling waters can be accomplished simply by allowing the water to stand in the lagoons used for biological treatment. This has the added benefit of promoting the biological action. Cooling towers are not necessary as the temperature of the water is not excessive.

Reuse. Various waste streams can be re-circulated to insure complete removal of fertilizers or intermediate products, such as phosphoric acid. Salts and heavy metals can be recovered from the brine produced by sylvite processing. Fluorides produced as a byproduct of phosphate fertilizer production have market value in various industries, such as dental products and paint. Since the cost of recovery is usually greater than the returns, recovery is rare. However, should controls be required on those discharges, recovery could in many cases be the least expensive control strategy.

Prevention. Process modifications which can reduce pollution loading include:

- Recycling condensate water into the boiler feed water system (ammonia production)
- Larger size of ammonia and urea plants may allow for more efficient compressors, reducing particulate levels
- Segregation of waste streams, especially those containing "exotic" pollutants, such as fluorides and zinc chlorides, can permit more efficient treatment
- Using low velocity air streams in drying can reduce particulate levels
- Using lower steam pressure allows for easier condensate recovery
- Using air-cooled instead of water-cooled condensers reduces wastewater pollution
- Storing ores under impervious cover can minimize runoff generation

PETROCHEMICAL INDUSTRY

Petrochemicals are obtained, directly or indirectly, from crude petroleum, which essentially consists of paraffins, napthalene, aromatic hydrocarbons, and small amounts of sulfur, nitrogen, and other compounds.

Sources of Pollutants.

The petrochemical industry synthesizes a tremendous number of organic compounds. These processes are so diverse it is impossible to note all of them here. Only polymer synthesis, which produces some of the most important industrial materials (including plastics, detergents, synethtic fibers and rubber, paints and fertilizers), is described as an example. Several polymerization processes are used, depending on the specific petrochemical products to be manufactured. Figure 5-11 is a process schematic of a polymer synthesis.

Monomers (molecules, usually containing carbon, of low molecular weight) are used as raw material in the polymer synthesis (combining two or more identical or similar molecules to create molecules of greater weight and different properties). Particulates escape as dust from monomer handling and from cutting, grinding, pulverizing, and packaging operations. The monomers are combined in different processes to build polymers. During these polymerization processes, excess monomers and solvents, by-product organic compounds, inorganic acids (HNO_3, HCl, H_2SO_4), and other oxides of sulfur and nitrogen may be emitted to the atmosphere. Principal air pollutant discharges are shown in Table 5-10.

During the polymerization process, BOD_5, COD, and suspended solids are discharged in wastewater. Centrifugation, the process step following polymerization, is responsible for the largest wastewater discharge. Again, BOD_5, COD, and suspended solids are the major pollutants. The same water pollutants are also discharged in small quantities during the drying and extrusion processes. Observed ranges of wastewater loading per unit of production together with the raw waste loadings of pollutants are summarized in Table 5-11. The great range in reported wasteloads and characteristics is the result of facility age, the design and type of production facilities, and the nature and source of the materials being processed.

Residue wastes are principally screenings, solidified catalysts, and concentrates. These are bulk-gathered from the spills, leaks, and vessel drainage that are not normally diverted to liquid waste treatment, due to their concentration and the negative effects they would have on the usual biological treatment systems. Residues in the form of slurries from air pollution control equipment and sludges from water treatment facilities are also produced.

Control Options.

Primary pollution control options are mechanical (such as hooding and ventilation systems);

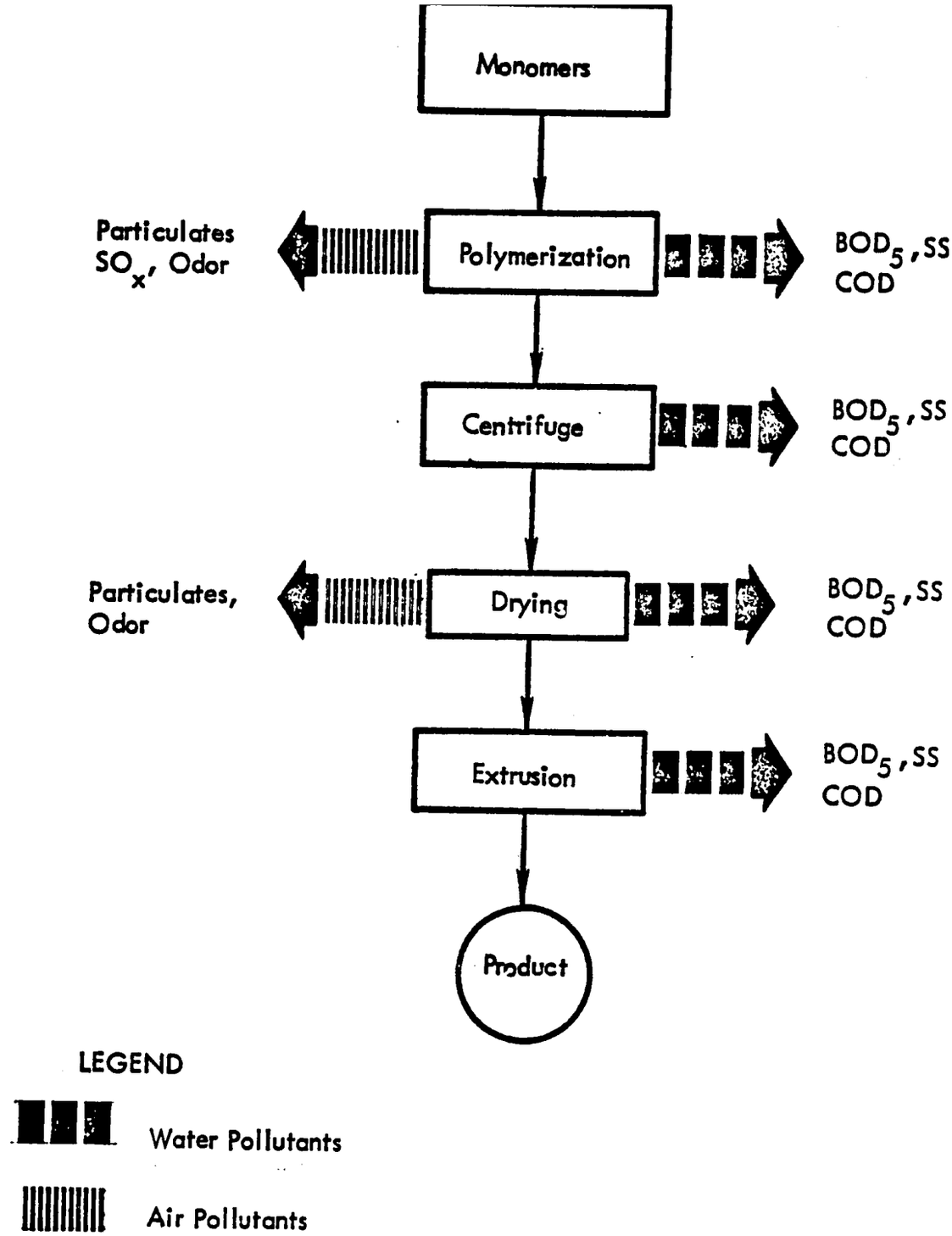

FIGURE 5-11
POLYMER SYNTHESIS

TABLE 5-10
PRINCIPAL AIR CONTAMINANTS AND EMISSION SOURCES:
RESIN MANUFACTURING

Resin	Air Contaminant	Representative Toxicities	Possible Sources of Emission [a]
Phenolic	Aldehyde odor	13.8 mg/m^3	Storage, leaks, condenser outlet, vacuum pump discharge
Amino	Aldehyde odor	20 mg/m^3	Storage, leaks
Polyester and alkyds	Oil-cooking odors, phthalic anhydride fumes, solvents	500 mg/kg body weight	Uncontrolled resin kettle discharge Kettle or condenser discharge
Polyvinyl acetate	Vinyl acetate, solvents	4,000 mg/m^3	Storage, condenser outlet during reaction, condenser outlet during steam distillation to recover solvent and unreacted monomer
Polyvinyl chloride	Vinyl chloride	20 mg/m^3	Leaks in pressurized system
Petroleum and coal tar resins	Monomer fumes		Leaks in storage and reaction equipment
Polyurethane resins	Toluene diisocyanate (TDI)	0.5 mg/m^3	Emission from finished foam resulting from excess TDI in formulation
Polystyrene	Styrene	376 mg/m^3	Leaks in storage and reaction equipment

[a]Possible control options include combustion, afterburners, adsorption, and chemical oxidation.

Source: 22.

TABLE 5-11
PETROCHEMICAL INDUSTRY WASTEWATER LOADING AND RAW WASTE LOADS

Product	Wastewater Loading (m^3/kkg)	Raw Waste Loads (kg/kkg of Production)		
		BOD_5	COD	SS
	Reported Range			
Polyvinyl chloride	2.5 - 41.72[a]	0.1	0.2 - 100	1 - 30
ABS/SAN	1.67 - 24.03	2 - 20.7	5 - 33.5	0 - 30
Polyvinyl acetate	0 - 25.03	0 - 2	0 - 3	0 - 2
Polystyrene	0 - 141.8[b]	0 2.2	0 - 6.0	0 - 8.4
Polypropylene	2.5 - 66.75	0 - 10	0 - 20	
Low-density polyethylene	0. - 41.72	0.2 - 4.4	0.2 - 54	0 - 4.1
Cellophane	100 - 559	20 - 133	40 - 334	6 - 70
Rayon (Zinc: 12-50)	33.33 191.9	20 - 45	33 - 100	--
Polyester resin	0 - 167[c]	3 - 20	6 - 45	0 - 12
Nylon 6 & 66 resins	0 - 152.3	1 - 135	1 - 300	0 8
Nylon 6 & 66 fibers	--	0.1-60	0.2 - 90	0.1-6
Cellulose acetate	16.69- 417[c]	6 - 70	11 - 100	2 - 20
Epoxy	2.5 - 5.1	57 - 82	30 - 127	5 - 24
Phenolic resin	0.5 - 20	15 - 51	90 64	0.5 - 7
Urea resin	--	--	--	--
Melamine	--	--	--	--
Acrylic resins	2.5 - 50.87	10 - 40	10 - 70	0.1-1.7
High-density polyethylene	0 - 30.87	0 - 1	0	0 - 3.4

[a]Emulsion process.
[b]Suspension process.
[c]Resin (n ncluding fiber).

Source: 100.

air stream cleaners; physical, chemical, and biological treatment processes; landfilling; combustion; deep well injection disposal; and in-plant controls such as reuse, recovery, temperature control, and improved housekeeping.

Treatment. The principal air treatment equipment options are scrubbing systems with a settling chamber followed by exhaust stacks equipped with spray scrubbers, venturi scrubbers, equipment for absorption and chemical oxidation, adsorption, combustion (both catalytic and direct flame), afterburners, and well designed and constructed hooding and ventilation systems.

The addition of solids such as phthalic anhydride to ingredients which are above the sublimation temperature of the phthalic anhydride releases emissions which cause increased opacity of the fumes. These emissions are easily controlled by scrubbing. The most common system has a settling chamber, called a resin slop tank, preceding an exhaust stack equipped with water sprays. The settling chamber consists of an enclosed vessel partially filled with circulating water, with gas connections from the reaction vessel and to the exhaust stack. The settling tank collects some solids and water from the reaction, and the stack water sprays trap most of the remaining emissions.

Another possible system is employed on the vapors from resin process kettles. To reduce visible emissions effectively, the vapor is passed through a precleaner spray chamber and then through a venturi scrubber. The scrubber water can be used once, or can be recirculated in conjunction with waste concentration and waste disposal facilities.

Where refluxing of ingredients is performed during the reaction, suitable reflux or horizontal-type condensers are used to condense the vapors of the reaction. Proper sizing of the condenser and maintenance of cooling medium temperature to assure complete condensation are necessary. Condensers are also used to conserve solvent and to control visible emissions. In cases where odor bearing gases cannot be condensed, serious odor problems result from concentrated emissions. Incineration of these gases can effectively reduce the odors.

Direct-fired afterburners can also reduce odor concentration by 99 percent and oxidize 90 percent or more of carbon to carbon dioxide. To obtain these results it is necessary to operate at outlet temperatures of 650 - 760 C with provision for direct flame contact with all gases and vapors emitted. Flashback and fire prevention must be taken into consideration in any afterburner design.

The most common wastewater treatment method used by the petrochemical industry is biological treatment preceded by gravity separation. The biological systems in use are activated sludge, waste stabilization ponds, contact stabilization, and extended aeration. Other options which show promise are: adsorption for soluble substances, in-depth media filtration for suspended solids, and chemical precipitation for some solubles. Possible options which have not been proved for application in the petrochemical industry are anaerobic processes, air stripping, chemical oxidation, foam separation, algal systems, wet air oxidation, liquid-liquid extraction, ion exchange, reverse osmosis,

freeze-thaw, evaporation, and electrodialysis. The latter methods will not be further discussed due to the lack of experience with their use within the industry.

Gravity separation normally begins the treatment of petrochemical wastewater streams. Well designed separators very satisfactorily separate compounds insoluble in water, compounds more soluble in oil fractions, and settleable solids. Gravity separators will not in themselves separate solubles or break emulsions. Important design parameters are wastewater flow, the presence or absence of emulsions, temperature of wastewater as it enters the separator, specific gravity, viscosity, settleable solids, and detention time.

Stripping removes phenolics, mercaptans, hydrogen sulfide, and other volatile compounds from waste streams through steam or flue gas. Stripping is a distillation process in which relatively volatile substances, phenolics, for example, are removed from the less volatile waste stream. It is usually used for removing hydrogen sulfide and ammonia. Inert or low volatility substances are usually not economical to remove due to high heating equipment requirements. Large quantities of low volatility pollutants are sometimes removed when they have an economic value which justifies their recovery. In steam stripping, the steam may be used as both a source of heat and as a dilutant for water solutions.

Adsorption mainly removes dissolved organic substances present in trace amounts. The wastewater is contacted with a solid which adsorbs the contaminant on its surface or in its pores. The solid is used in either a fixed bed or a slurry to obtain the necessary contact adsorption time. When saturated with contaminant, these solids are either incinerated, landfilled, or regenerated for reuse. Powdered or cracked coal, Fuller's earth, or bauxite are relatively inexpensive adsorptants, but these solids do not have the high adsorptive capacity of the more expensive solids such as activated carbon, alumina, or silica gel.

Extraction of phenolics or other pollutants with a suitable solvent is usually done in one of three ways. In batch treatment, the wastewater is mixed with the correct amount of solvent. In column treatment, the heavier wastewater flows downward through a rising light solvent, employing a continuous counter-current to increase the efficiency of the extraction. The third treatment method, centrifugal extraction, has higher operating costs but requires less space and maintenance. Removal efficiency of 70 to 99 percent is common. The amount of removal depends upon the degree of contact, the solvent employed, and the hydraulic and mechanical effectiveness of the equipment used.

Chemical treatment removes oil emulsions from wastewaters by the addition of a flocculating agent, followed by filtration or sedimentation. Chemicals which do not require heat to break the surface tension are economical because they save fuel.

The oxygen demand of petrochemical wastewaters can also be satisfied through oxidation with chemicals, including chlorine, chlorine compounds, ozone and hydrogen peroxide. Reactions with chlorines are dependent on temperature, pH, concentration of the oxidant, concentration and nature of the organics, and contact time. Chlorine dioxide is more expensive than chlorine, but it has advantages: operating conditions are less rigid,

lower quantities of ClO_2 are still effective, and organics are oxidized without forming undesirable intermediates.

Many organic compounds can be oxidized by ozone (O_3), which is a strong oxidizing agent. It cannot be stored due to its high reactive capacity and must be used continuously as generated. It may be used following biological treatment to remove trace amounts of phenols in petrochemical waste treatment. Ozonation equipment can be purchased as both air-cleaning and air-drying equipment. Capital costs are approximately $660 to $840 per kilogram of ozone per day, in sizes over 454 kg per day, exclusive of shipping, foundation, contact vessel, and piping. Satisfying an available oxygen demand of 10 mg/l in a 40,000 cu m per day plant requires an estimated ozone cost of one cent per 1,000 liters of wastewater treated.

Biological treatment methods commonly include stabilization ponds, aerated lagoons, activated sludge, and trickling filters. The fundamental microbiological and biochemical reactions are the same for all but the sludge return used in activated sludge or similar processes with shorter retention time and smaller space requirements. Biological treatment processes are generally lowest in per unit treatment costs. The major advantages of stabilization ponds and trickling filters for treating certain chemical wastes are relatively low cost and ability to absorb shock loads. A disadvantage is that they require large land areas.

Oxidation towers have also been used for biological treatment in the petrochemical industry. The oxidation towers used in one refinery had a 99.5 percent phenolic removal efficiency, while BOD_5 was reduced from 158 to 11 mg/liter.

Ultimate disposal by controlled dilution is used only when there are relatively small amounts of pollutants, and the impact in the receiving waters is not toxic. If the waste possesses enough fuel content to support combustion and dewatering is not required, it may be incinerated. Control of air pollutants is then necessary. Other methods of control include salvaging, reuse, and deep-well injection.

Reuse. Hydrogen can be recovered from some petrochemical processes by three principal methods. The method employed is dependent upon plant size, location, feed composition, and the intended use of the hydrogen. Wet scrubbing with hot, carbonate-containing aqueous solutions, ethanolamines, and high pressure water will remove CO_2 and H_2 streams in conventional synthesis-gas plants. Hydrogen is separated from hydrocarbons by an adsorption process on molecular sieves or on activated carbon. Cryogenic scrubbing removes higher boiling point impurities in condensates, by boiling the contaminated hydrogen compounds, and is useful when a refrigerant is readily available, such as a partial oxidant synthesis-gas plant.

Several other recovery methods are also possible. Chlorinated hydrocarbons can be distilled from waste following the chlorination of methane. By the same process, olefins can be recovered from the thermal production of ethylene, acetaldehyde (which follows the production of vinyl acetate and solvents), and rubber latexes. Crystallization is used

to separate xylene from ethyl benzene. Solvents such as carbon disulfide and carbon tetrachloride are recovered by adsorption processes. Ion exchange can recover basic amino-acids, amines, alkaloids, and organic acids from waste streams. Spent caustic is commonly regenerated by oxidation. Extraction processes can recover isobutylene, napthalenes, paraffins, and phenols from various wastes; organic dyes can be extracted following adsorption on Fuller's earth. These and other petrochemical recovery practices are listed in Table 5-12.

Prevention. The processes proposed or in use should be evaluated to isolate wastewaters containing water-soluble organics from the general waste stream. These wastewaters can be recycled and reused. Installation of instruments and alarms, and checks by the operators, are important in preventing and controlling leaks, spills, overflows, and subsequent loss of chemicals. Other prevention options include diked areas around storage tanks, above-ground transfer lines, curbed process areas, area catchment basins or slop tanks, holding lagoons as equalization buffers for the general plant area, spill clean-up equipment, spill control plans, and enforced routine preventive maintenance schedules.

TABLE 5-12
PETROCHEMICAL RECOVERY PRACTICES

Contaminant Recovered	Recovery Process	Recovered From
Hydrogen Carbon dioxide	Wet scrubbing	Synthesis gas
Hydrogen	Adsorption	Hydrocarbons
Hydrogen	Cryogenic scrubbing	H_2 mixed with impurities
Hydrogen	Membrane permeation	Petroleum effluents
Chlorinated hydrocarbons	Distillation	Chlorination of methane
Olefins	Distillation	Thermal production of ethylene
Acetaldehyde	Distillation	Vinyl acetate
Solvents	Distillation	Rubber latexes
Xylene	Crystallization	Ethyl benzene
Carbon disulfide	Adsorption	
Carbon tetrachloride	Adsorption	
Isobutylene	Extraction	
Napthalenes	Extraction	Variety of wastes
Paraffins	Extraction	
Phenols	Extraction	
Organic dyes	Extraction	Following adsorption on Fuller's earth
Amino acids	Ion exchange	
Amines	Ion exchange	
Alkaloids	Ion exchange	
Organic acids	Ion exchange	
Caustic	Oxidation	Spent caustic regeneration

PETROLEUM MANUFACTURING

Sources of Pollutants

Petroleum refining involves the separation and conversion of crude oil into gases, gasoline, kerosene, and distillates such as diesel fuel and fuel oil. Figure 5-12 presents a schematic of the industry. The ten major steps in petroleum refining are discussed below:

Crude desalting. There are two methods of separating salt from the crude oil; both begin with water-wash desalting in the presence of chemicals. The water-wash may be followed by heating and either gravity separation, or electrostatic water/oil separation.

Crude oil fractionation or distillation. This process separates crude into intermediate fractions according to boiling point ranges.

Cracking. This process, whether thermal or catalytic, breaks down heavy gas-oil fractions into lower molecular-weight fractions (such as domestic heating oil). The catalytic process operates at a lower temperature and pressure, resulting in less pollutants. Due to recent trends of using petroleum with higher sulfur content, the use of hydrocracking, propane deasphalting (replacing thermal cracking), and hydrotreating (replacing catalytic cracking) have increased.

Hydrocarbon rebuilding. Can be achieved by polymerization or alkylation. Polymerization converts olefins (unsaturated hydrocarbons) and feedstocks to a slightly higher octane. Processing by polymerization is being replaced by alkylation due to improved yields.

Hydrocarbon rearrangement. Consists of isomerization and reforming to achieve higher octane products. Neither isomerization or reforming involves major pollutant discharges.

Solvent refining. Consists of solvent deasphalting to recover lube or catalytic cracking feedstocks with asphalt as a by-product, and solvent dewaxing of lubricating oil stocks by promoting crystallization of the wax.

Hydrotreating. Olefins are saturated to remove sulfur and nitrogen compounds, odor, color, and gum-forming materials; catalytic action with hydrogen from straight run or cracked petroleum fractions is employed.

Grease manufacture. This primarily involves mixing soap and lube oil.

Asphalt production. This is the conversion of asphaltic feedstock (flux) to asphalt.

Product finishing. Consists of drying, sweetening, lube oil finishing, blending, and packing. Drying and sweetening removes sulfur compounds, water, and other

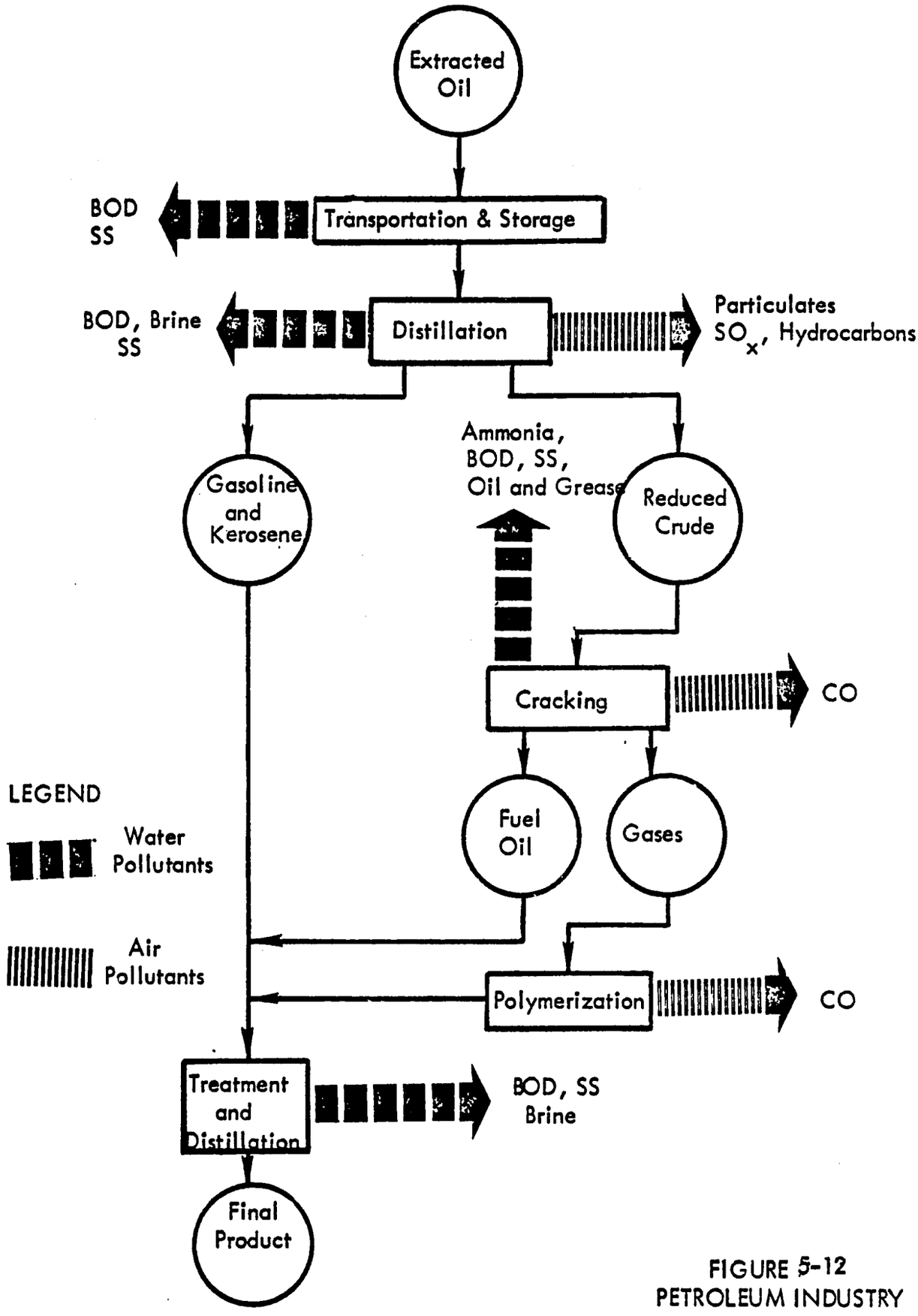

FIGURE 5-12
PETROLEUM INDUSTRY

impurities from gasoline, kerosene, domestic heating oils, and other middle distillate products. Sweetening removes mercaptans and thiophenes. Lube oil finishing involves clay or acid treatment to refine dewaxed lube oil and refined solvent by removing color-forming and other materials. Blending and packing is the final step in the production of a finished petroleum product. The little waste generated is high in emulsified oil. Its sludge has a high lead content.

Table 5-13 summarizes the pollutants which are generated by each of these ten major process steps. The main air pollutants emitted during petroleum refining are particulates, sulfur oxides, and hydrocarbons. Fluid cooking is also the main generator of sulfur oxides. Carbon monoxide is emitted in high concentrations from the catalytic crackers.

The main water pollutants are BOD, oil and grease, phenols, ammonia, suspended solids, and brine.

The main residues include the particulates from air pollution control equipment, sludge from water pollution control, and absorbents plus oil from spill cleanup. Approximately 0.5 kg of dry sludge are produced per kg of BOD_5 removed.

Control Options

Treatment. Air pollutants such as particulates can be controlled by electrostatic precipitators and fabric baghouse filters. Sulfur oxides discharged during the distillation process can be controlled by oxidation. The carbon monoxide can be converted to carbon dioxide in a carbon monoxide boiler. Choice of a particular air treatment method depends on constraints such as size of treatment equipment and energy requirements, since the removal efficiencies are almost equal. Generally, baghouse filters are larger than precipitators and more expensive to maintain; precipitators, however, require a much larger energy input than filters.

The water pollutants generated by petroleum refining can be controlled by end-of-pipe and in-plant methods. The former consists of a three stage process: air flotation, equalization, and neutralization; nutrient feed (phosphoric acid), followed by biological treatment with sludge thickening (digestion and dewatering); and ultimately granular-media filtration. In-plant controls include: (1) installation of sour-water strippers to reduce the sulfide and ammonia concentrations entering the treatment plant, (2) elimination of once-through barometric condenser water by using surface condensers or recycle systems with oily water cooling towers, (3) segregation of industrial sewers, so that unpolluted storm runoff and once through cooling waters are not normally treated with the process and other polluted waters, and (4) elimination of polluted once-through cooling water by monitoring and repair of surface condensers or by use of wet and dry recycle systems. The described treatment methods can remove 90 percent of the BOD_5, and 95 percent with the inclusion of activated carbon adsorption after filtering. Providing wastewater reduction will reduce long-term operating costs.

TABLE 5-13
POLLUTANT DISCHARGE SOURCES: PETROLEUM INDUSTRY

Pollutant \ Refining Process	Crude Desalting	Crude Oil Fraction	Cracking	Hydrocarbon Re-building	Hydrocarbon Re-arrangement	Solvent Refining	Hydrotreating	Grease Manufac-ture	Asphalt Produc-tion	Product Finish-ing
Water pollutants										
Waste oils	○	●	●	○		○		●	●	○
Suspended solids	●			○						●
BOD	○		●			○			○	●
COD	○		●						●	●
Alkaline wastes		●	●							
Ammonia	○	●	●	●			●			
Heat	●									
Chlorides	○	●								
Hydrosulfides			●							
Dissolved solids	○			●						●
Solvents						●				○
Soap								●		
Acid			●							○
Clay										●
Air pollutants										
Mercaptans		●		●						
Sulfonates										●
Hydrocarbons										●
Particulates		●								○
Carbon Monoxide			○							
Air and water pollutants										
Phenols	○	●	●				●		●	●
Sulfides		●	●	●	●	○	●			○
Cresols										●
Xylenes										●
Lead										●

● Major source, quantitatively.

○ Minor source.

The residues can be incinerated for volume reduction prior to landfill. The sludge, which is 80 percent water, can be dried and reduced in volume by 50 percent.

Reuse. The oxidized sulfur compounds can be recovered as sulfuric acid in a spent acid regeneration plant or by a sulfur recovery plant. (See Photograph 5-3 .) At current prices, revenues generated may approximately equal annual capital costs for the recovery system. The sulfur recovery plant can recover 98 percent of elemental sulfur for reuse. If a higher removal efficiency is desired, the treatment can be followed by a limestone scrubber.

Examples of reuse of wastewater include:

- Reuse of sour water stripper bottoms in crude desalters.
- Reuse of once-through cooling water as make-up to the water treatment plant.
- Reuse of boiler condensate as boiler feed water.
- Recycling of water from coking operations.
- Recycling of waste acids from alkylation units.
- Recycling overhead water in water washes.
- Reuse of overhead accumulator water in desalters.
- Reuse of heated water from the vacuum overhead condensers to heat the crude. This reduces the amount of cooling water needed.

Prevention. Loss of hydrocarbons from evaporation can be prevented by installing floating roofs on storage tanks and on carbon monoxide-hydrocarbon boilers and crackers. Many of the newer petroleum refining processes are being designed or modified to reduce water use with resulting minimization of contamination. Improvements which can be installed in existing refineries include: hydrocracking and hydrotreating processes which generate lower waste loadings than the units they replace; and automatic monitoring instrumentation for early detection of process upsets which would otherwise result in excessive discharge to the sewers.

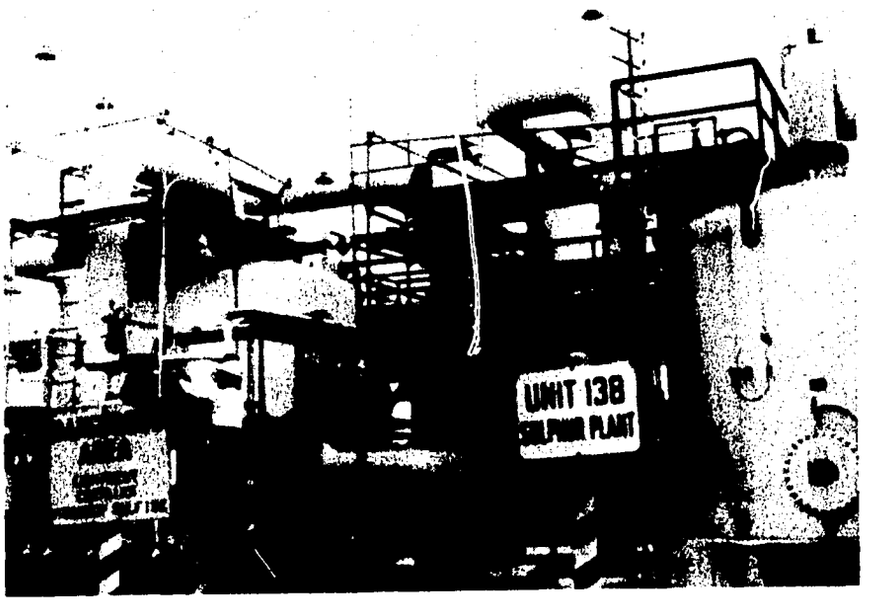

Photograph 5-3

Sulfur recovery plant at oil refinery eliminates a major source of air pollution. Recovered sulfur is used to make sulfuric acid and related products.

PULP AND PAPER MANUFACTURING

Sources of Pollution.

Paper manufacturing involves three major operations:

- Pulp production (from wood or other raw materials).
- Further treatment of the pulp to reduce fiber size, composition, or texture.
- Production of the end-product, paper.

Raw materials which are pulped include wood, flax, cotton, rags, straw, hemp, esparto, jute, bagasse, and waste paper. In addition, clay (kaolin) may be added as a binding agent. Since most paper is wood-based, this section will emphasize pollution from wood-based paper production (shown schematically in Figure 5-13).

Wood is transported to the mill by rail, truck, or by flume or river, the latter usually by tug and raft in developed areas, but may be by river-drives in more remote regions. Transport by "river-drives" litters the stream with branches and bark, contributes to bank erosion, and strips soil cover along the bank, causing an increase in water turbidity and a decrease in dissolved oxygen. Wood is transported by rail or truck as either logs or chips.

The logs are prepared for pulping by debarking and being sawed into manageable lengths. If pulping is to be done chemically, the logs are also chipped to increase the surface area available for chemical reaction. Chipping is not necessary for pulping by mechanical grinding. Preparation contributes some dust particulates, and most of the residue is washed away.

Of the six main pulping processes, one (groundwood) is by mechanical grinding, and the other five (chemi-groundwood, kraft, sulfite, neutral sulfite, and semi-chemical pulping) by chemical action. In the chemi-groundwood process, the chips are cooked before grinding. Kraft pulping uses sulfate to dissolve the lignin which holds the cellulose fibers together. Kraft pulping is used in the production of higher quality paper, such as writing paper. Chemicals used in the other processes include calcium bisulfite, sulfur dioxide, magnesium, ammonium bisulfite, and sodium bisulfite. Residues produced include bark and some waste pulp. SS, BOD, color, and acids are major water pollutants. Particulates are not produced, but odors, SO_x, H_2S are major air pollutants. The pulp is further treated by cooking in a digester (producing more odors) and is then separated from spent liquors in a blowtank, screened and washed, and thickened by vacuum filtration. The pulping blowdown liquor is highly concentrated but of low volume. It contains high levels of BOD, COD, and suspended solids.

The thickened pulp is bleached to remove unwanted color. Chemicals used in bleaching include chlorine, chlorine dioxide, hypochlorites, peroxides, and hydrosulfites. If

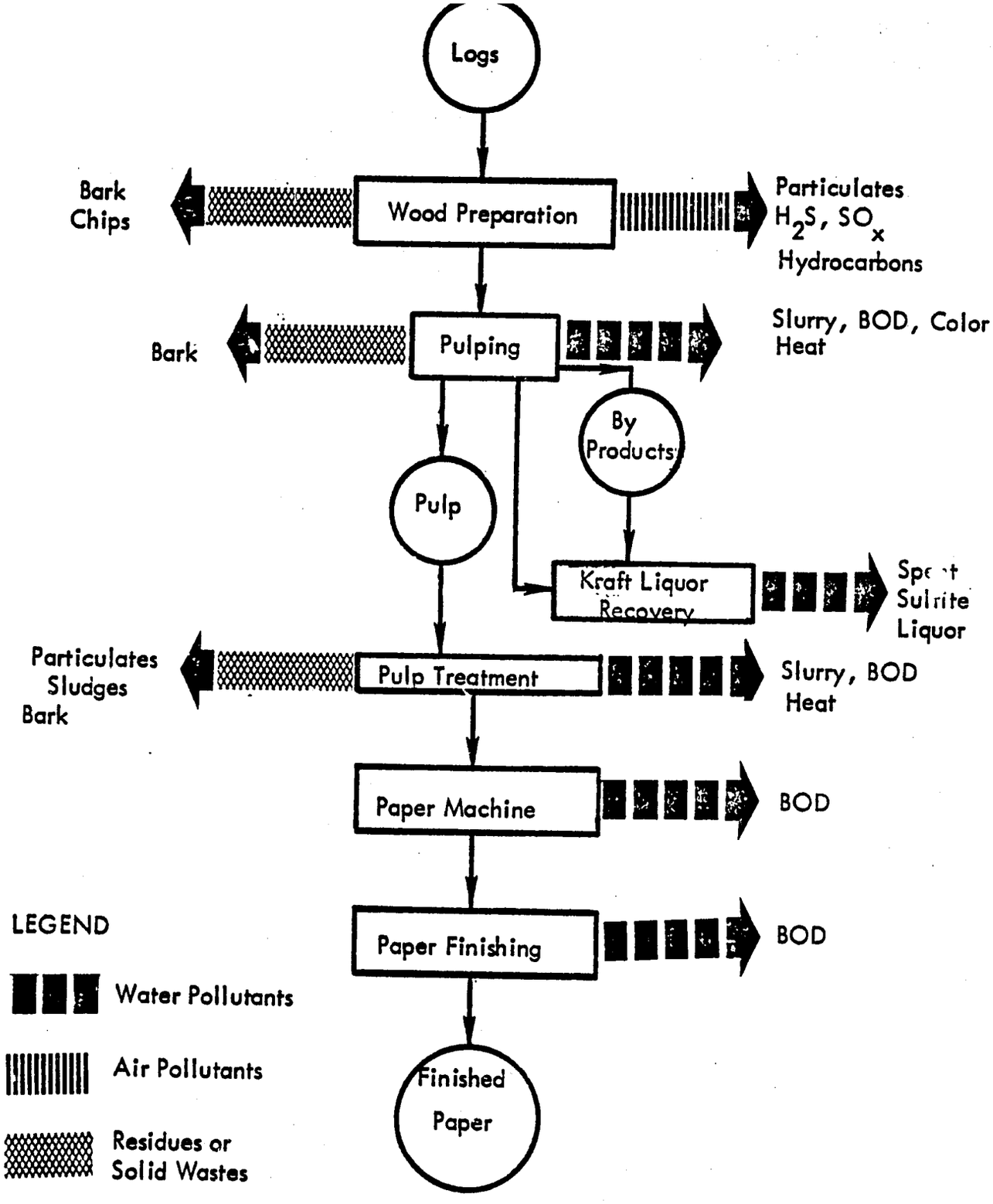

FIGURE 5-13
PAPER PRODUCTION

used, these chemicals are present in the waste stream. Color is also a problem in treatment of bleaching wastewaters.

Paper finishing involves mixing the bleached pulp with fillers (kaolin), resins, and coloring dyes (if desired). The pulp is spread on a web, excess water removed by heat and pressure, and then passed through a series of rollers for more drying and for smoothing and forming into sheets. Final steps include winding on rolls and cutting. Finishing produces water pollution, mainly BOD and heat. Some solid waste is produced in the cutting and finishing operations.

Air pollutants and suspended solids are produced in the initial stages of pulp and paper production; thereafter, chemical, organic, and thermal pollution of the wastewater are the major problems. Effluent flows from paper mills vary in quantity, depending on plant size and age and type of paper produced. Effluent loads are given in Table 5-14 for various processes.

Control Options

Treatment. Air pollutants can be controlled by electrostatic precipitators (90-99 percent efficient for particulate removal) and by scrubbers (70-95 percent efficient for particulate removal). Most paper mills use scrubbers for pollution control, as these also remove some gases, especially SO_x and odors.

Suspended solids can be removed by settling ponds, mechanically cleaned clarifiers, and air flotation. Some pulp and paper mills utilize multiple settling ponds, arranged to permit periodic removal of solids by excavation; this method, however, has the drawback that objectionable odors may occasionally develop. Clarifiers are generally designed to handle overflow rates of 25,000-40,000 liters/sq m/day. Where greater removal of suspended solids is required, coagulants such as alum, activated silica, and polyelectrolytes can be used to improve removal performance to 90 percent or higher.

Very high BOD removal efficiency is possible with properly designed activated sludge systems. Where land is available, many pulp and paper mills use aerated lagoons. Aerated lagoons have much longer aeration periods (usually 3-10 days) than activated sludge systems, but they may not have to recycle sludge or have final settling facilities. When land is inexpensive, stabilization basins can also be used. They have the advantage of requiring little attention, and their long detention periods minimize process upsets. The design of oxidation ponds for pulp and paper waste is similar to that of municipal sewage treatment ponds; generally they are 0.90-1.50 m deep and are loaded at about 56 kg BOD_5/ha/day.

Trickling filters have been used to treat the wastewater of some pulp and paper mills. Fibers in the wastewater, however, have occasionally caused plugging of the stone media. Several systems have successfully overcome this problem by the use of plastic media as roughing filters for the partial removal of BOD. Trickling filters can be used to advantage when cooling is desired before further treatment.

TABLE 5-14

EFFLUENT LOADS FROM PULP AND PAPER MILLS

Source	Effluent (kg/kkg output)	
	Suspended Solids	BOD_5
Kraft and soda pulp	10-15	13-25
Groundwood pulp	20-40	8-13
Sulfite pulp (no liquor recovery)	10-20	200-300
Neutral sulfite semi-chemical pulp	50-90	125-225
Textile fiber pulps	150-250	100-150
Straw pulp	200-250	200-250
Bleaching	3-18	6-100
Deinked pulp	250-400	50-65
Fine papers		
Tissue	25-50	8-15
Bond, mimeo, and printing	25-50	10-20
Glassine	5-8	8-13
Coarse papers		
Boxboard	25-35	10-20
Corrugating board	25-35	13-30
Kraft wrapping	8-13	3-8
Newsprint	10-30	5-10
Speciality papers		
Fiber	100-150	70-85
Asbestos	150-200	10-20
Roofing felt	25-50	20-30
Insulating board	25-50	75-125

Source: 40.

Irrigation systems can also be used successfully in the treatment and disposal of wastewaters. Application rates in this method vary from 93,500-935,000 liters/ha/day and loadings should be less than 225 kg BOD_5/ha/day. Regions subject to periodic droughts, with high demand for irrigation water may find this approach to wastewater disposal favorable. In hilly regions and freezing climates, however, the disposal of wastewater through irrigation systems may be disadvantageous. Other drawbacks to the use of irrigation disposal for pulp and paper manufacturing wastewaters are: high land requirements (4.3-5.3 ha per 1,000 m^3/day) which in some areas may not be economically feasible, and (2) potential groundwater contamination, especially when chemical wastewaters are applied to the soil.

Other treatment techniques which might have application to pulp and paper wastewaters include filtration (BOD and COD removal), chlorination or ozonation (bacteria removal), activated carbon adsorption, mass lime treatment (color removal), electrodialysis (separation of inorganics), and reverse osmosis and ion exchange. These techniques are in the experimental stage and have not yet been employed to any significant extent in this industry.

Sludges withdrawn from the primary clarifier and the biological treatment systems often require thickening before disposal. Sludge thickening techniques which have been employed include gravity concentration of mixed primary and secondary sludges, air flotation, centrifuging, and vacuum and pressure filtration. Final sludge disposal has been accomplished by landfilling or lagooning with other wastes such as bark, grit, and ash. Incineration has been used where land costs are high or where regulations economically justify it. Strong sludge wastes have been disposed of by chemical recovery processes, and soluble chemicals by deep well disposal.

Sludge handling cost is significant--up to half of the total waste treatment cost. The major problem of sludge handling is thickening. Insufficient storage capacity, a lightweight rake mechanism, pumps or lines unable to handle the thickened sludge, and lack of a torque measuring device are common problems that may reduce the operating efficiency of sludge thickeners. In addition to these problems, some sludges (including biological sludge, water treatment plant sludge, ground wood-pulping particles, lignin residues, and slurry obtained from clarification of white paper mill effluent) are not easily dewatered.

Residues result from plant maintenance, wood preparation, screening, and air and water pollution reduction measures. Dry residues can be incinerated or landfilled depending on the availability and costs of disposal alternatives. Wet residues, slurries, and sludges can be trucked or piped to a landfill or dewatered and hauled in a semi-dry state. Sludge digestion can reduce sludge volume by one-half.

Reuse. Reuse leads directly to reductions in wastewater volumes and pollutant load. Water reuse; chemical, fiber and solids recovery; and process improvements can reduce

effluent loads. Table 5-15 summarizes the waste reduction efficiencies of selected process modifications and sub-processes. The data suggest that wastewater reuse is an effective method of controlling water pollution. Problems associated with reuse, however, include slime buildup (leading to equipment plugging and deteriorated quality paper), increased acidity (leading to corrosion problems and decreasing paper strength), dissolved solids and fines buildup, and temperature increase. A series of by-products can be recovered from pulp and paper manufacturing processes, such as acetic acid, alcohol, emulsifying agents, lignins, turpentine, and yeast. Possible markets for these may be industries which produce fertilizers, pesticides, petrochemicals, inorganic chemicals, and leather. Although all of these by-products have been produced, their recovery has not always been economically justified. The trend has therefore been to substitute pulping processes which afford easier chemical recovery.

Prevention. On the average, about half of a plant's pollutant discharge results from processing upsets which can be greatly reduced by good operational techniques and effective plant design. The EPA Effluent Guidelines Report for the pulp, paper, and paperboard industry recommends six practices to minimize the effects of upsets:[102] (1) periodic boiling of evaporators to remove scale which builds up and may interfere with efficient operation, (2) avoiding overflows by careful storage of weak and strong black liquors and recovered plant chemicals in adequate facilities before these materials are returned to the originating subprocesses, (3) curtailing production when overflows threaten to cause a treatment plant upset or an increased discharge of pollutants, (4) monitoring mill sewers continuously to warn when spills occur so that corrective measures can be taken, (5) training plant personnel to avoid spills whenever possible, and to take corrective action when accidents occur, and (6) providing storage lagoons to receive and hold shock loads of untreated waste so as not to overload the waste treatment works.

A large pulp and paper plant has developed a tertiary wastewater treatment system with a four-stage activated sludge process. The system removes over 90 percent of the color and and most of the BOD from the plant's wastewater. In 1934, the firm produced 45,000 tons of paper per year and over 11,350 kg of BOD per day. It now produces 180,000 tons of paper per year and only 680 kg of BOD per day. This means that although paper production is 400 percent greater than in 1934, the total pollutant discharge is 94 percent lower. The current pollutant discharge rate per ton of paper is less than 2 percent of the 1934 rate.[75]

TABLE 5-15
POTENTIAL WASTE REDUCTION EFFICIENCIES OF SELECTED PROCESS MODIFICATIONS: PULP AND PAPER PRODUCTION

Processes and Alternative Subprocesses	Waste Reduction Efficiency (percent)				
	Suspended Solids	Dissolved Solids	Total Solids	BOD_5	Wastewater Volume
A. Wood preparation (no water reuse)	0	--	--	0	0
With water reuse	77	--	--	93	72
Long log preparation	95	--	--	99	86
B. Pulping					
Mechanical pulping					
Groundwood	0	0	0	0	0
Refining mechanical pulp	46	89	85	37	71
Sulfate (Kraft) pulping (batch, no reuse)	0	0	0	0	0
Batch process with water reuse	37	-4	-1	56	72
Continuous process	89	42	47	60	77
Sulfite pulping (Ca base, no reuse)	0	0	0	0	0
Calcium base with water reuse	24	84	83	35	29
Soluble bases with liquor recovery	71	84	87	80	57
Semichemical pulping (NSSC batch process)	0	0	0	0	0
NSSC Kraft batch process with water reuse	53	-28	-29	30	32
Deinking (cooking and washing without reuse)	--	--	--	--	0
Cooking and washing with water reuse	--	--	--	--	66
C. Pulp screening					
Sulfate (Kraft) pulp (screening without reuse)	0	0	0	0	0
Screening with partial water reuse	55	18	23	22	62
Screening and cleaning with water reuse	<100	<100	<100	<100	<100
Sulfite (screening without reuse)	0	0	0	0	0
Screening with partial water reuse	43	9	23	38	34
Screening and cleaning with water reuse	<100	<100	<100	<100	<100
D. Pulp washing and thickening					
Mechanical pulp (thickening and cleaning with decker)	0	0	0	0	0
Thickening with vacuum filtration	21	52	30	30	25
Thickening and cleaning with vacuum filtration	57	77	75	79	81

TABLE 5-[illegible] (Cont.)
POTENTIAL WASTE REDUCTION EFFICIENCIES OF SELECTED PROCESS MODIFICATIONS: PULP AND PAPER PRODUCTION

Processes and Alternative Subprocesses	Waste Reduction Efficiency (percent)				
	Suspended Solids	Dissolved Solids	Total Solids	BOD_5	Wastewater Volume
D. Pulp washing and thickening (cont.)					
Sulfate (Kraft) pulp (diffuser washing with decker thickening)	0	0	0	0	0
Vacuum filter washing and thickening	17	21	20	40	72
Multistage V.F.[a] washing and thickening	17	78	72	81	80
Sulfite pulp (diffuser washing with decker thickening)	0	0	0	0	0
Vacuum filter washing and thickening	72	50	52	52	62
Multistage V.F. washing and thickening	79	75	75	71	90
E. Bleaching					
Sulfate (Kraft) pulp (bleaching without reuse)	--	--	0	--	0
Bleaching with low degree of water reuse	--	--	40	--	58
Bleaching with high degree of water reuse	--	--	69	--	74
Sulfite pulp (bleaching, without reuse)	0	0	0	0	0
Bleaching with low degree of water reuse	50	32	34	37	67
Bleaching with high degree of water reuse	80	80	80	72	86
F. Paper Making (without white water recovery)	0	0	0	0	0
With white water recovery	34	27	25	20	60
With improved white water recovery	50	60	56	50	77

[a] Vacuum filtration.

Source: 40.

COFFEE ROASTING

Sources of Pollutants

The coffee industry schematic is shown in Figure 5-14. The green beans are first prepared using air cleaning and scalping operations to remove hulls and foreign objects. The only pollutants created here are air pollutants consisting of particulates of dust, chaff, and dirt particles; the emission quantities are shown in Table 5-16 . The clean beans are then sent to the roaster via a surge bin. Air pollutants from roasting consist of bluish-white smoke, odors, and particulates. An analysis of coffee-roaster exhaust gases is given in Table 5-17 . Odors from the roaster are attributed to alcohols, aldehydes, organic acids, and nitrogen and sulfur compounds. There are no water pollutants. The beans are then either air classified or water cooled. Air classification removes any other foreign particles not as yet removed and cools the beans. Water cooling removes the foreign objects by washing. Air classification produces particulates and odors, while water cooling produces suspended solids and light organic oils. The final step is packaging, which produces no major pollutants.

Control Options.

Treatment. Particulates produced throughout the coffee roasting process can be removed efficiently by several means. These include electrostatic precipitators, cyclone separators, cloth filters, and scrubbers. The electrostatic precipitator can have almost a 100 percent particulate removal capability, while the cyclone separators, cloth filters and scrubbers have about a 90 percent particulate removal capability. The disadvantages of the electrostatic precipitator are its high initial investment, maintenance, and power costs. They also do not remove odors. The advantages of the cyclone separator, cloth filters, and scrubbers are low initial investment and lower maintenance and operating costs. They also do not remove odors. An afterburner can reduce odors, if required. A system for air pollutant treatment may consist of a combination cyclone separator and afterburner. Water pollutants may be economically controlled by lagoon sand settling basins.

Reuse. Coffee bean husks can be used in some animal feeds.

Prevention. There seem to be no satisfactory alternatives to the present system for plants already constructed. In new plants, however, the continuous cooler process can produce less pollution (see Table 5-17) than other processes now in common use.

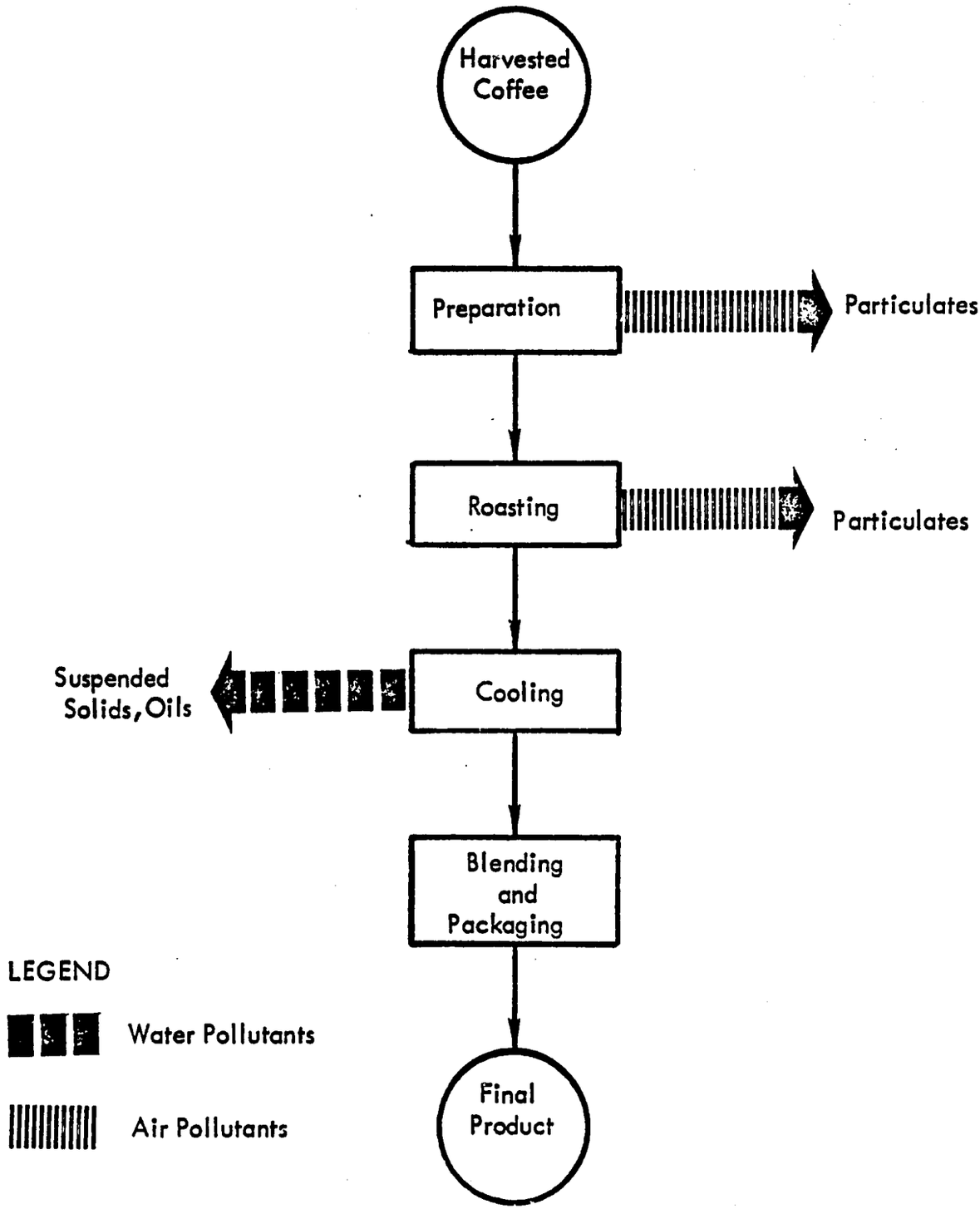

FIGURE 5-14
COFFEE PRODUCTION

TABLE 5-16

UNCONTROLLED PARTICULATE EMISSIONS FROM COFFEE PROCESSING

Process	Particulate Emissions (kg/kkg green beans)
Roaster	
Direct-fired	3.8
Indirect-fired	2.1
Stoner and cooler	0.7
Instant coffee spray drier	0.7

Source: 22

TABLE 5-17

COFFEE-ROASTER EXHAUST GASES

Pollutant	Contaminant Concentration (mg/liter)		
	Continuous Roaster	Continuous Cooler	Batch Roaster
Particulate matter	6.67	0.2	5.65
Aldehydes (as formaldehyde)	139	--	42
Organic acids (as acetic acid)	223	--	175
Oxides of nitrogen (as NO_2)	26.8	--	21.4

Source: 22

MEAT PROCESSING

Meat processing involves primarily the production of meat cuts, ham, bacon, sausage, and canned meat products. The raw materials are either fresh or frozen meat. Figure 5-15 presents a process schematic for the industry.

Sources of Pollutants

Basic Processing. The frozen meats are thawed in water or air or chipped into smaller pieces. Chipping uses size-reduction equipment designed to handle frozen pieces of meat. In breaking, the halves and quarters of the carcasses are cut into more manageable size for further handling and preparation. Trimming is the removal of excess or unwanted fat, etc. Boning may be performed at the same location as trimming. The large pieces of meat are cut or sawed for the direct marketing of the individual cuts. Skin may be removed from a piece of meat by either machine or hand. The water pollution discharges from all these steps are BOD, oil, grease, thermal, and suspended solids. Odor is an air pollution nuisance. Paunch, manure, and sludge and other solid wastes are produced which are generally disposed to landfills.

Special Processing. Grinding is necessary to reduce the size of meat pieces for hamburger, sausages, or other ground meat products. Sausages are prepared by mixing the ingredients to form a stable emulsion followed by extrusion, stuffing, and molding. Waste materials are BOD, oil, and grease.

Some meats may be pickled. The pickle solution is usually prepared by mixing sugar, sodium nitrite, sodium nitrate, and salt in water. The solution may be applied to the meat either by injection or by soaking. Important pollutants are nitrates, nitrites, sodium chloride, BOD, suspended solids, oil, and grease.

Many of the meat products are either cooked or smoked. Smoke is generated from a hardwood sawdust or small-size wood chips. Cooking is usually done in oven or wet cookers using steam. The meat product is then cooled with water. Oil and grease, ash, alkalinity, thermal, BOD, and suspended solids are the major water pollutants. Odor and particulates may contribute to air pollution.

Some processed meat products, such as hams or dry sausage, require holding or aging before they are shipped out of the meat processing plant. The holding areas are refrigerated and drippings are apt to accumulate daily on the floors. The water pollution discharges are BOD, oil, and grease. The processed meats are packaged in either paper or plastic wrappers or containers. Small quantities of solid waste are generated.

Control Options

Treatment. The significant air pollution problem is odors from the processing and decomposition of meats, as well as other combustion-related gases. Decomposition odors are mainly associated with meat processing, and waste treatment. Warm anaerobic treatment ponds create serious odor problems. Enclosed or aerobic waste treatment facilities can control odors. Meat processing odors can best be controlled by

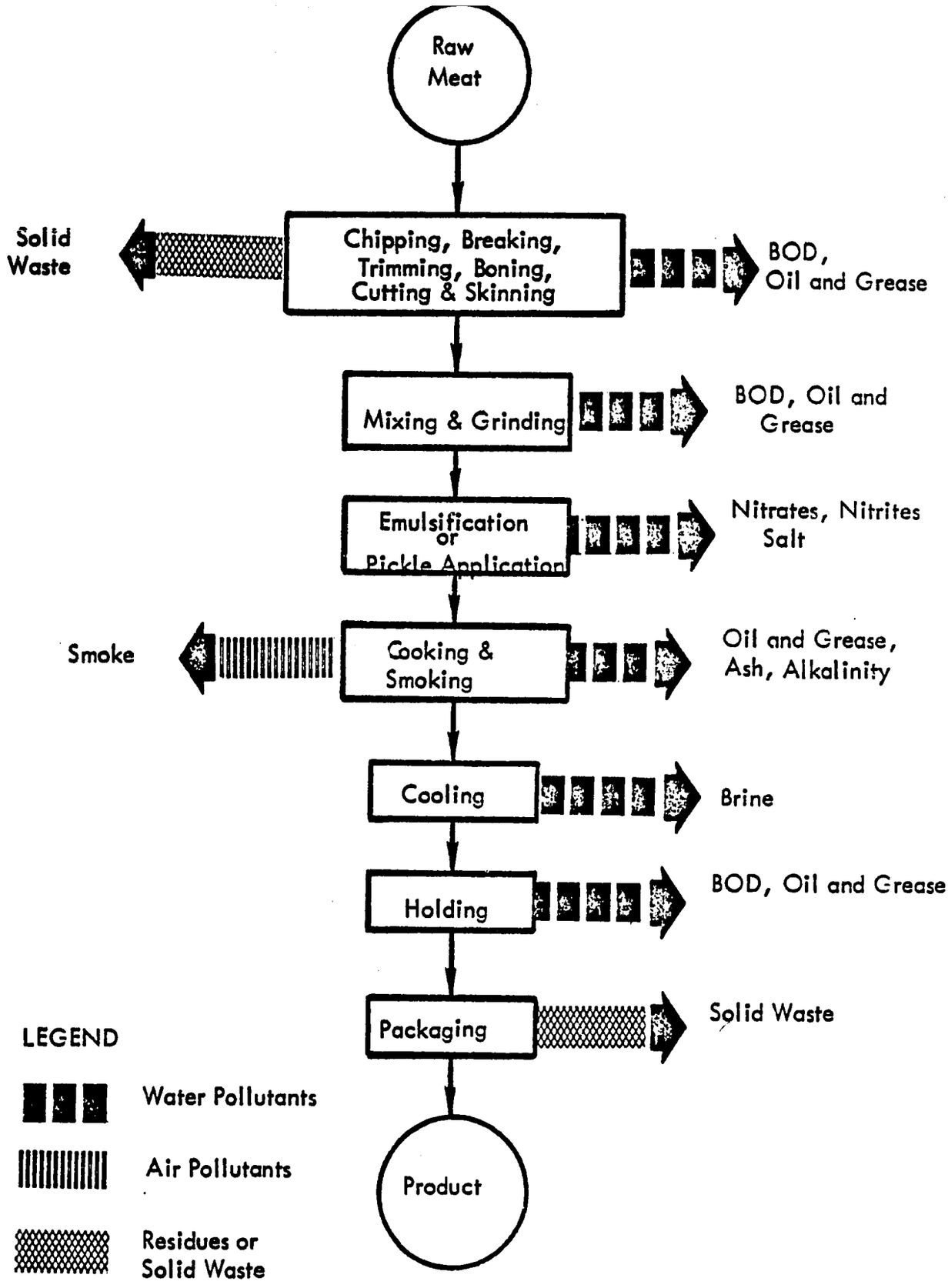

FIGURE 5-15
MEAT
PROCESSING

Source: 55.

enclosing the source, and good housekeeping to quickly process or dispose of residues.

The relatively large meat and fat particles are removed from the wastewater by screening. Following screening, the wastewater is fed to settling tanks where a large part of the grease and solids are skimmed off the top by collecting troughs. The wastewater flows into a basin where coagulants and air are introduced to remove suspended material. The skimmed sludge is removed for disposal. The wastewater is further treated by anaerobic lagoons followed by aerobic lagoons to remove most of the BOD. Phosphates can be precipitated by trivalent iron, trivalent aluminum salt, or lime. Ammonia can be stripped off in a packed tower with a countercurrent air stream introduced at the bottom of the tower.

Reuse. Many meat wastes may be recovered and sold. The residues collected from the screening and skimming usually go into the inedible rendering. Blood, bone, skimmings, cuttings, cleanup, and other wastes can be reclaimed for use in animal feed and fertilizers; the reclaimed fats can also be sold to glycerin and soap manufacturers.

Prevention. The amount of pollutants can be reduced by using dry cleaning methods on all floors where blood and meat particles have accumulated, and by minimizing water and detergent use, consistent with cleaning requirements. Some of these wastes may have by-product value as indicated above.

SUGAR REFINING

Sources of Pollutants

The process schematic for sugar refining is shown in Figure 5-16. In the first step, affiniation, raw crystals are first placed in a syrup solution and heated. The melt or "magma" of hot syrup and raw sugar is spun in a centrifuge to separate the molasses from the sugar crystals. The air pollutants generated here are particulates, SO_x, NO_x, CO, and hydrocarbons; BOD is the only water pollutant produced.

The next step provides clarification and color removal. The solution is first screened and a coagulant is added to remove suspended and colloidal particles; then color is removed by passing the liquor sequentially through bone char cisterns, activated carbon vats, and (sometimes) ion-exchange columns. This step generates the same pollutants as affiniation (described above).

Following clarification and color removal, the liquor is concentrated in continuous evaporators which superheat the liquor. Then pressure is reduced suddenly, causing a flash evaporation. The air pollutants generated here are also particulates, SO_x, NO_x, CO, and hydrocarbons. There are no water pollutants.

The preceding step produces liquid sugar which can be recrystallized and finished. Recrystallization and finishing involve evaporating the remaining water and centrifuging and granulating. This generates the same air pollutants as the previous steps. BOD is the only water pollutant.

Control Options

Treatment. The major air pollutants generated by each step in the sugar refining process are produced by the fuel burned to heat the boilers and vats, rather than as a result of the process. Control options include recycling hot air as a pre-heat for boilers, evaporators, etc., as well as standard combustion techniques (wet scrubbers, filters, etc.).

The only water pollutant, BOD, can be effectively treated by lagooning, activated sludge, sand filtration, land application, etc.

Reuse. There are no uses or reuses for the air pollutants. Water can be reused for irrigation after only partial treatment or can be diverted and used as cooling or heating water, if contact with processed sugar and syrup is avoided.

Prevention. Air pollutants can be reduced by changing to a better type or grade of fuel. In addition, exhaust can be recycled to preheat boilers and evaporators, thus reducing the fuel requirement.

Because most of the waste contains sugar, prevention of the pollutants is economically desirable. In-plant process changes to reduce spills or excessive wet drainage are important techniques.

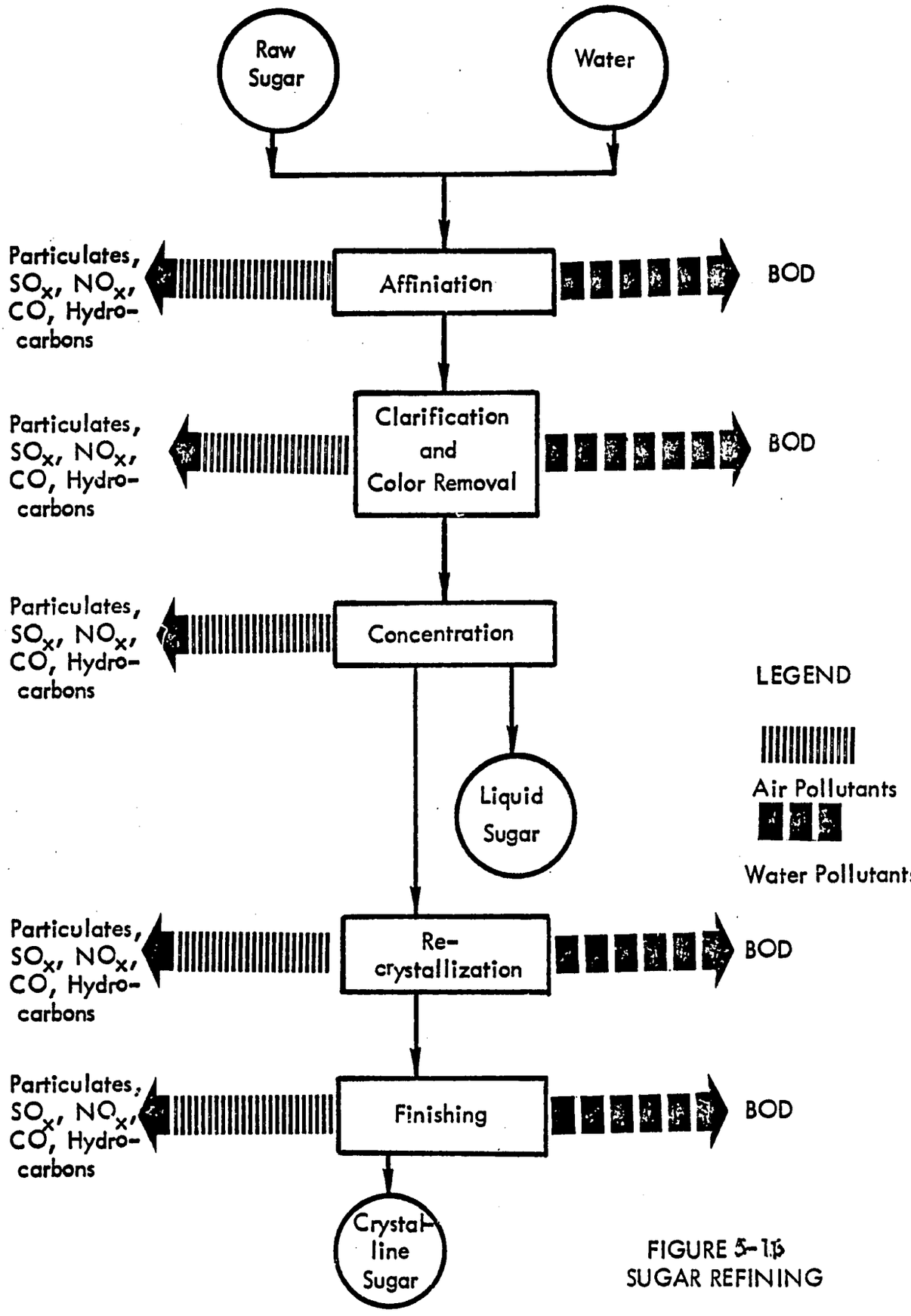

FIGURE 5-15
SUGAR REFINING

Entrainment is the entrapment of liquid droplets containing sugar in the water vapor produced by evaporation of syrup. Reduction of entrainment is one goal of in-plant recovery. Entrainment is affected by three factors: height of vapor rise, operation and maintenance, and liquid-vapor separator devices. Allowing the vapor to rise causes sweetwater droplets to fall back when the current uplift force becomes less than the gravitational attraction force. Proper operation and maintenance, such as control of pressure and temperature changes, would decrease entrainment.

A number of devices can be installed to separate liquid droplets from gaseous vapors. Two of these devices are Serner separators, and demisters. Serner separators are baffle-type arrangements which, in conjunction with other devices, can reduce by 84 percent the potential BOD_5 levels which result if condensed vapors are discharged in natural water bodies. Demisters are wire mesh arrangements which change the direction of vapor streams. Demisters can reduce emissions, and also act to reduce heat loss.

Other devices include surface condensers, cyclone separators (which separate entrained water droplets from gas by centrifugal force), catch-alls, and baffles with large surface areas. Figure 5-17 schematically illustrates these devices.

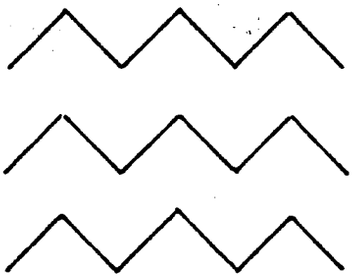

(A) Zig-Zag Baffle

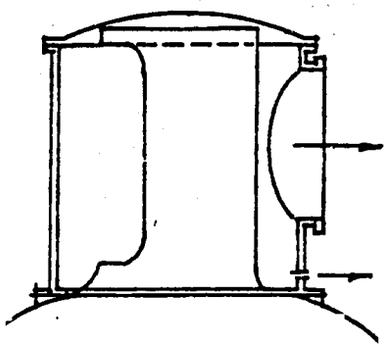

(B) Catch All

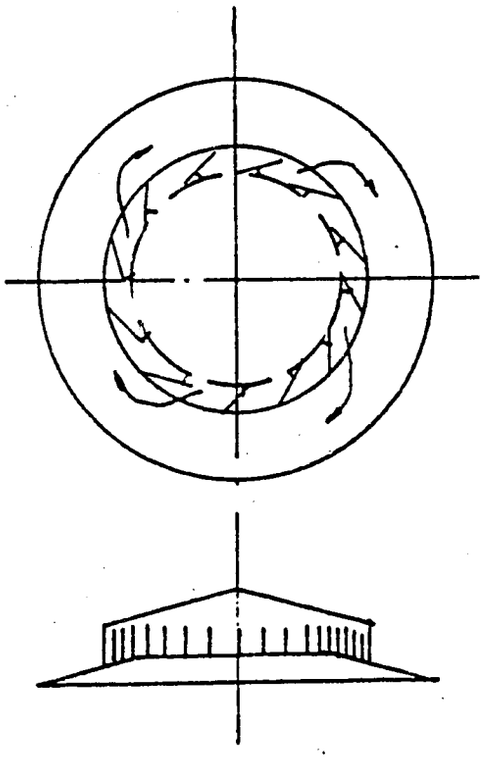

(C) Cyclone Separator

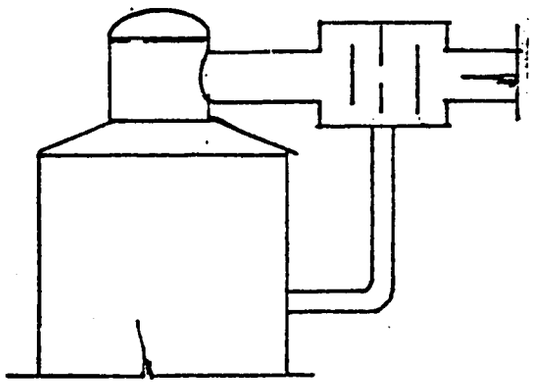

(D) In-Line Baffle Box

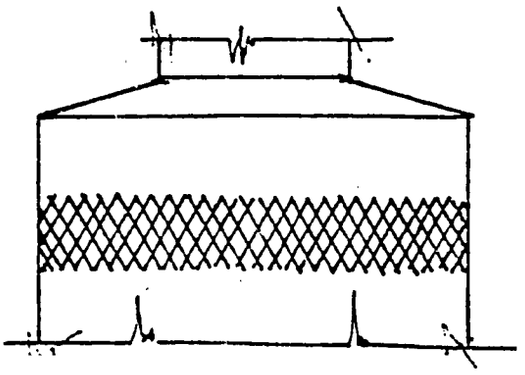

(E) Demister

Source: 92.

FIGURE 5-17
DEVICES TO REDUCE ENTRAINMENT

TEXTILE MANUFACTURING

Sources of Pollutants

Wool. Fabric is produced from fibers through a wet process involving basic steps shown in Figure 5-18. Scouring, the first process step, cleans the wool impurities. The water pollutants generated here are oil, BOD, SS, TDS, and alkalinity. Then the wool is neutralized and rinsed, which produces more BOD, TDS, SS, and alkalinity. Dyeing, the next step, produces TDS, acids, BOD, and color pollutants. Mixing, oiling, weaving, and fulling the wool material follow. The "fulling" process shrinks the loosely woven wool into a tight, closely woven cloth; it produces no pollutants. After fulling, the material is washed and then sent to the carbonizing process. The water pollutants generated by washing are detergents, oil, BOD, and alkalinity. Carbonizing, which adds strength to the fabric, produces no pollutants. After carbonizing, the material is rinsed, bleached, neutralized, and rerinsed. The pollutants here are oil, BOD, and acidity.

Cotton. A process schematic for the production of finished cotton fabric from raw picked cotton is shown in Figure 5-19. The raw cotton is first dried and cleaned. Cleaning generates solid waste (mainly burrs, hulls, leaves, and stems). After cleaning, the cotton is ginned to separate the seeds from the cotton fibers. Ginning generates substantial quantities of particulates. After ginning, the cotton fibers are carded and spun into cotton yarn; no pollutants are generated by this step. In the next steps, the cotton is slashed, desized, rinsed, scoured, and washed. Only water pollutants are generated here and consist of BOD, SS, TDS, and alkalinity. The main purpose of these steps is to give the cotton fibers the tensile strength and smoothness necessary for subsequent weaving. Bleaching and rinsing follow to whiten the fiber. The pollutants generated here are BOD, SS, TDS, and acidity. Mercerizing, which follows, gives cotton fibers their luster. The water pollutants here are mainly BOD and SS. Rinsing, washing, dyeing, and rinsing follow, and generate color, BOD, and alkalinity as the only pollutants. The cotton fiber is then finished and ready for industrial consumption.

Synthetic Fibers. The process description for synthetics is simpler than for wool or cotton due to the lack of new material impurities in the synthetics. The synthetic fabric manufacturing process schematic is shown in Figure 5-20. The raw synthetic fiber is first sized and then lightly scoured. The scouring removes any impurities, and the water pollutants generated are BOD and SS. There are no air pollutants. The synthetic fiber is then bleached and rinsed, resulting in BOD and SS as pollutants. The material is dyed as the last step, and the resulting water pollutants are BOD and color. There are no air pollutants except from related combustion processes.

Control Options

Treatment. The BOD load in the effluent from wool, cotton, and synthetic fiber processing may be treated with biological methods. This type of treatment is an attractive alternative when a high proportion of the biodegradable material is in soluble form, as in the textile industry. Industrial wastes often lack necessary nutrients to sustain

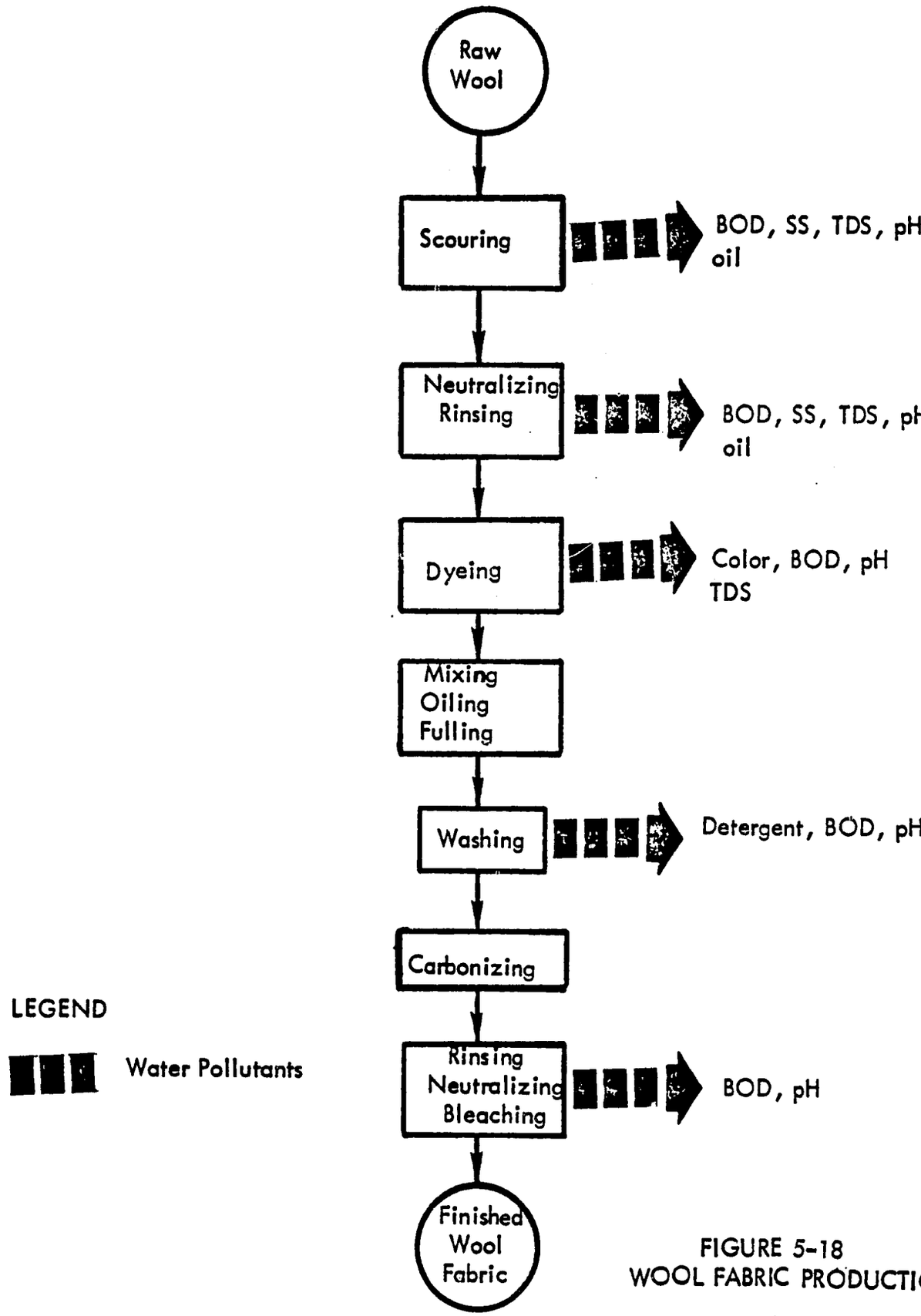

FIGURE 5-18
WOOL FABRIC PRODUCTION

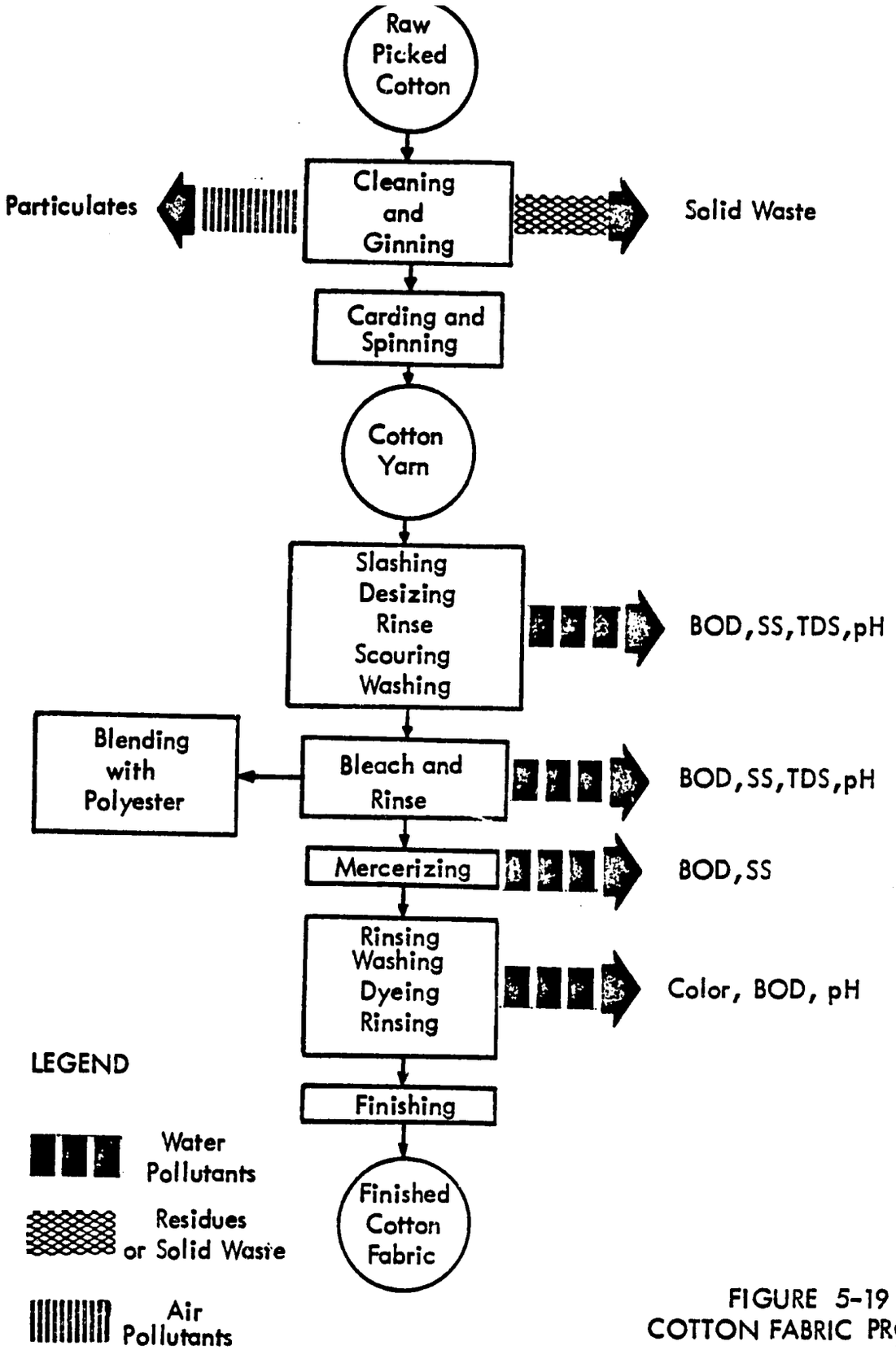

FIGURE 5-19
COTTON FABRIC PRODUCTION

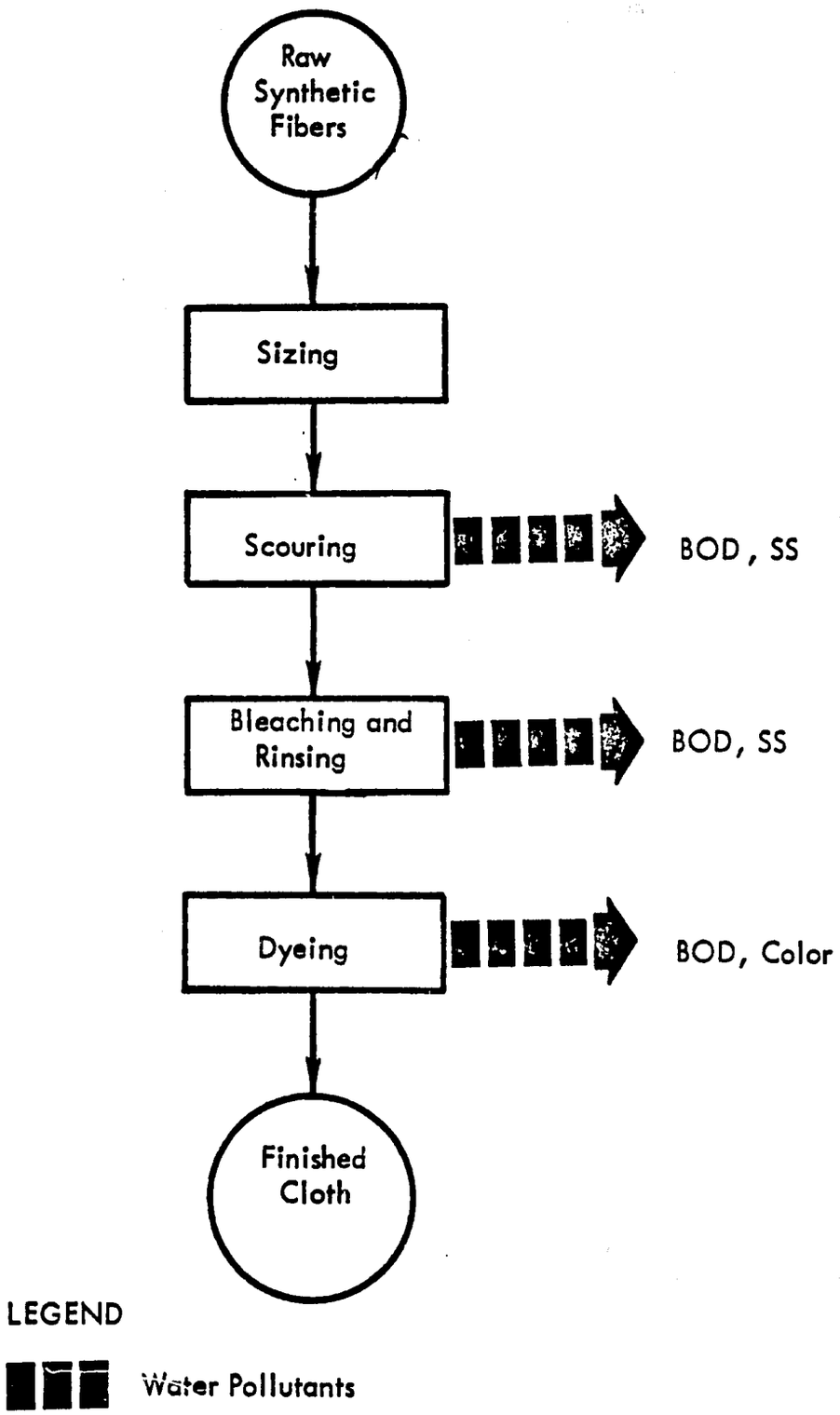

FIGURE 5-20
SYNTHETIC FABRIC
MANUFACTURING PROCESS

the biological growth needed in biological treatment. For efficient biological treatment, nutrients such as phosphorous and nitrogen are added to synthetic or cellulose wastes. Effective treatment techniques includes activated sludge, biological filtration, and anaerobic and aerobic filtration. Activated sludge systems require less room and may have higher BOD removal efficiencies than other treatment techniques, but have higher equipment and operating costs. Basically, an activated sludge treatment plant consists of some type of pretreatment (screening and primary sedimentation) followed by aeration and secondary sedimentation. Normally the secondary sludge is recirculated and mixed with the aerated influent. Activated sludge treatment is capable of removing 95+ percent of the influent BOD_5 from textile manufacturing plants.

The trickling filter process has found application and acceptance in the treatment of textile wastes. Trickling filter BOD_5 removal efficiency is inversely proportional to the BOD_5 surface loading rates. Approximately 90 percent BOD_5 removal can be obtained using high recirculation rates in the trickling filter.

Anaerobic lagoons, another efficient treatment system for textile wastes, are capable of 85 percent BOD_5 and suspended solids removal. Such systems usually consist of two relatively deep (3 to 5 meters) anaerobic lagoons, with limited surface area and a waste loading of 240 to 320 kg of BOD_5 per 1,000 cubic meters, and a detention time of from 3 to 5 days. The advantages of the anaerobic lagoon include low initial cost, ease of operation, and the ability to handle shock waste loads while providing a consistent quality effluent. Anaerobic processes have the disadvantages of generating odors and combustible gases, and being a slow rate of treatment.

Aerated lagoons with return activated sludge have been successful in the treatment of textile wastes. Because of the good treatment aerated lagoons can provide, and their relatively low cost, this is a popular facility. Oxygen or air is fed to the lagoon by either a fixed mechanical turbine-type aerator or by another mixer. The lagoons are usually about 2.4 to 4.6 meters deep and have a 2 to 10 day detention time. BOD5 removal is usually 40 to 60 percent with no removal or return of suspended solids. Advantages of aerobic lagoons include lesser land requirement and rapidly added dissolved oxygen to convert anaerobic wastewaters to an aerobic state. Disadvantages include increased power requirements and that the aerobic lagoon without returned activated sludge does not sufficiently reduce BOD_5 or suspended solids.

The particulates produced by cotton ginning (approximately 3 kg per bale of row cotton) have traditionally been controlled by filters. However, this method is inefficient and does not remove the smaller, more hazardous particulates. High efficiency cyclones are capable of achieving 99+ percent removal efficiencies, but their cost has precluded their installation in any but the larger, more permanent ginning facilities.

Reuse. There is no feasible use or reuse of water-borne pollutants for cotton or synthetic fibers. Lanolin oil is reclaimed from the wool scouring process.

Prevention. The best process modification for reducing pollutant loads would be processes to eliminate the waste products entering the waste stream. For example, dry processes such as printing can sometimes replace textile dyeing. Quick closing valves and good plumbing maintenance and plant operation can reduce water pollutants.

LEATHER TANNING

Sources of Pollutants.

The tanning industry begins with whole hides and produces finished leather. The production steps involved and the pollutants generated by each step are shown in Figure 5-21.

Washing and Soaking. Washing and soaking removes any dirt, salts, blood, manure, and non-fibrous proteins from the hide, and restores the moisture lost during curing. The pollution discharges are BOD, SS, and TDS.

Green Fleshing. Green or lime fleshing removes the areolar tissues from the flesh side of the hides. Attached fat, connective tissue, blood vessels, nerves, voluntary muscle, and unremoved meat left as a result of poor flaying are also removed. The pollution discharges are BOD, SS, and alkalinity.

Liming and Unhairing. Hair may be removed by loosening with lime followed by machine or manual pulling, by complete destruction (pulping), or by dissolution (burning off). The pollution discharges are BOD, SS, alkalinity, hydrogen sulfide (H_2S), sulfur dioxide (SO_2), and particulates.

Splitting. Splitting is a mechanical process in which the unhaired hide is slit through the middle of its thickness to produce two distinct layers: the upper, and the flesh side, or "split." Some tanneries process only the grain layer and sell or discard the splits.

Bating. Bating prepares the swollen and alkaline hide for tanning. It is generally accomplished with ammonium salts and a mixture of commercially prepared enzymes. Ammonia is the only major pollutant.

Pickling. Pickling makes the skin acid enough to prevent precipitation of insoluble chromium salts on the skin fibers during mineral tanning. Typical pickling chemicals are 1 to 2 percent sulfuric acid and 7 to 10 percent sodium chloride. The pollution discharges are acidity and sodium chloride.

Degreasing. Degreasing can be done by three different procedures: (1) emulsification, (2) solvent extraction, or (3) squeezing. The pollution discharges are BOD, SS, and TDS.

Tanning. Tanning, the process of converting the fibers in hides to leather, can be done in two ways: vegetable tanning and chromium tanning. Chromium is the major pollutant in the latter method; colored wastes are also produced by vegetable tanning.

Retanning, Dyeing, and Fatliquoring. The retanning process imparts different characteristics to the finished leather. It is usually done in drums using chrome, vegetable, or synthetic tanning agents. After tanning, bleaching hides (with sodium bicarbonate and sulfuric acid) may be practiced. It is done in vats or drums. Dyeing may be carried out

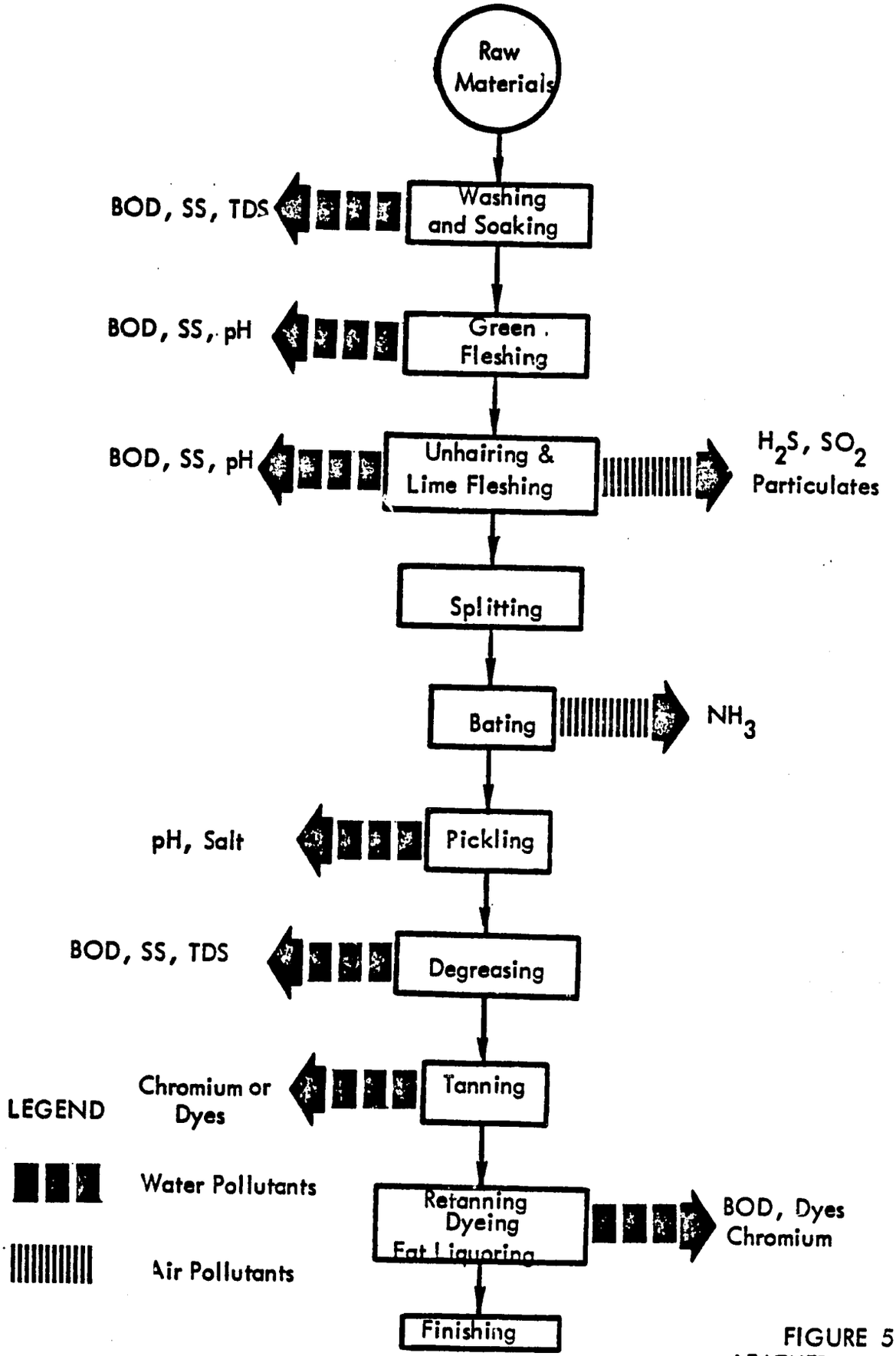

FIGURE 5-21
LEATHER PROCESSING

in the same drum as retanning. Both synthetic and natural dyes are used. Finally, in fatliquoring, oils are added to replace the natural oil lost during processing. Important pollutants are BOD, dyes, and chromium.

Finishing Process. The finishing processes include drying, wet-in coatings, staking or tracking, plating, and other specialty processes.

Control Options.

Treatment. Hydrogen sulfide can be oxidized with a catalyst prior to the discharge to the main plant sewers and treatment. The ammonia is removed by air stripping. Fly ash emission can be kept to a minimum by using wet scrubbers or electrostatic precipitators.

Since the volume and strength of the wastes vary with time, an equalizing tank is necessary to produce optimum results in water treatment operations. The equalization should include the control of waste flow, strength, and pH. Detention times are usually about 24 hours. The wastewater from the equalizing tank can be fine screened to remove hair particles, wool, fleshings, and hide trimmings. The non-flocculating discrete particles and floatable low-density materials (e.g., grease and scum) which pass through the screen can be removed by plain sedimentation. Chromium color and lime can be treated by chemical coagulation and sedimentation. Chromium is precipitated at a pH greater than 8.5; lime can be precipitated as calcium carbonate by carbon dioxide. The crystalline structure of the carbonate nucleus provides an effective surface for adsorption of organic matter. Aerobic lagoons can be applied for BOD removal. Table 5-18 gives, for three different plant sizes, cost ranges for the various water pollution control options. The solid wastes can be disposed of as sludge in landfills or mixed into the soil.

Reuse. The process solutions can be recycled and reused. Some tanneries have been able to reuse the pickle liquors and chrome tanning solution up to five times. Most tanneries recover fleshings and raw hide trimmings for sale to rendering plants or conversion into glue at the tannery site. The hair is also sold as a by-product.

Prevention. Since a reduction in flow would reduce both treatment plant capital and operation costs, plants should decrease water use as much as possible. Sulfur dioxide air pollution can be reduced by using fuels with low sulfur content.

TABLE 5-18
WASTEWATER TREATMENT COSTS:[a]
LEATHER TANNING INDUSTRY

Treatment Process	Plant Size					
	300 Hides/day		700 Hides/day		2,000 Hides/day	
	Capital Costs ($1,000)	Annual O & M ($)	Capital Costs ($1,000)	Annual O & M ($)	Capital Costs ($1,000)	Annual O & M ($)
Screening	3.6 - 23.5	271 - 2,715	7.2 - 45.3	543 - 5,430	18.1 - 108.6	1,629 - 16,290
Sedimentation	18.1 - 36.2	814 - 2,715	36.2 - 72.4	1,810 - 5,430	81.5 - 181	3,620 - 10,860
Chemical precip.	18.1 - 144.8	2,715 - 12,670	36.2 - 290	5,430 - 27,150	81.5 - 543	16,290 - 81,450
Trickling filter	48.9 - 144.8	2,715 - 14,742	90.5 - 271.5	5,430 - 18,100	181 - 543	12,670 - 45,250
Activated sludge	61.5 - 181.0	2,715 - 14,480	135.8 - 362	5,430 - 28,960	271.5 - 905	12,670 - 72,400
Lagooning	3.6 - 9.1	181 - 1,086	9.1 - 18.1	362 - 2,353	23.5 - 54.3	905 - 5,430
Oxidation pond	4.9 - 12.7	1,086 - 3,620	12.7 - 27.2	2,172 - 7,240	29 - 72.4	5,430 - 18,100
Sludge disposal	--	2,715 - 12,670	--	5,430 - 27,150	--	14,480 - 72,400

[a] All costs 1966 costs adjusted to 1974 by ENR Index.

Source: 78.

FOR FURTHER READING

American Petroleum Institute. Manual on Disposal of Refinery Wastes. New York, 1969.

Battelle Memorial Institute. Inorganic Fertilizer and Phosphate Mining Industry--Water Pollution and Control. EPA 12020 FPD. Washington, D. C.: U. S. Govt. Printing Office, 1971.

Goldstein, R. F. The Petrochemical Industry. London: E & F N Span, 1958.

Lamb, J. C. Guidelines for the Control of Industrial Wastes: Pulp and Paper Manufacturing. New York: World Health Organization, 1972.

Schaffer, S., and P. Tropper. Analysis of Proposed Effluent Guidelines: Cement Industry. EPA 230/1-73-004. Washington, D. C.: US EPA, 1973.

U. S. Environmental Protection Agency. Development Document for Proposed Effluent Limitations Guidelines: Basic Fertilizer Industry. EPA 440/1-73/011. Washington, D.C.: U. S. Govt. Printing Office, 1973.

U. S. Environmental Protection Agency. Development Document for Proposed Effluent Limitations Guidelines: Bauxite Refining. EPA 440/1-13/019. Washington, D. C.: U. S. Govt. Printing Office, 1973.

U. S. Environmental Protection Agency. Development Document for Proposed Effluent Limitations Guidelines: Cane and Sugar Refining. EPA 440/11-73/002-a. Washington, D. C.: U. S. Govt. Printing Office, 1973.

U. S. Environmental Protection Agency. Economic Analysis of Proposed Effluent Guidelines: Leather Tanning and Finishing Industry. Washington, D. C.: U. S. EPA, 1973.

U. S. Environmental Protection Agency. Development Document for Proposed Effluent Limitations Guidelines: Meat Products Point Source Category. EPA 440/1-74/031. Washington, D. C.: U. S. Govt. Printing Office, 1974.

U. S. Environmental Protection Agency. Development Document for Proposed Effluent Limitations Guidelines: Petroleum Refining. EPA 440/1-73/014. Washington, D. C.: U. S. Govt. Printing Office, Dec. 1973.

U. S. Environmental Protection Agency. Development Document for Proposed Effluent Limitations Guidelines: Plastics and Synthetic Materials Manufacturing. EPA 440/1-74/036. Washington, D. C.: U. S. Govt. Printing Office, Sept. 1973.

U. S. Environmental Protection Agency. Development Document for Proposed Effluent Limitations Guidelines: Primary Aluminum Smelting. EPA 440/1-73/019a. Washington, D. C.: U. S. Govt. Printing Office, Oct. 1973.

U. S. Environmental Protection Agency. Development Document for Proposed Effluent Limitations Guidelines: Pulp, Paper, and Paperboard Mills. EPA 440/1-74/025. Washington, D. C.: U. S. Govt. Printing Office, Jan. 1974.