AGENCY FOR INTERNATIONAL DEVELOPMENT
WASHINGTON, D. C. 20523

BIBLIOGRAPHIC INPUT SHEET

FOR AID USE ONLY
Batch 51

1. SUBJECT CLASSIFICATION
A. PRIMARY: TEMPORARY
B. SECONDARY:

2. TITLE AND SUBTITLE
Building to resist the effect of wind,v.3: a guide for improved masonry and timber connections in buildings

3. AUTHOR(S)
Fattal,S.G.; Sherwood,G.E.; Wilkinson,T.L.

4. DOCUMENT DATE	5. NUMBER OF PAGES	6. ARC NUMBER
1977	56p.	ARC

7. REFERENCE ORGANIZATION NAME AND ADDRESS
NBS

8. SUPPLEMENTARY NOTES (Sponsoring Organization, Publishers, Availability)
(In NBS building science ser.100)

9. ABSTRACT
(HOUSING R & D)

Volume 3 of a five-volume report on a project to develop improved design criteria for low-rise buildings to make them more resistant to destruction from high winds. The three and one-half year project was sponsored by AID and the National Bureau of Standards. This document describes and illustrates the use of connectors for masonry and timber elements in low-rise buildings. Emphasized are connectors and construction details that make buildings less susceptible to damage, particularly roof damage, from high winds. Section 1 presents a general overview of masonry connectors and timber fasteners. Section 2 discusses in detail connectors in building systems using masonry wall construction. Section 3 treats fasteners used in buildings of timber wall construction. The basic idea in this heavily illustrated report is that an inexpensive low-rise building will not collapse or lose its roof in high winds if, during construction, care is taken in securely connecting all of its components, from the foundation to the roof. The timber and masonry connectors, truss plates, sheet metal fasteners, and other special metal devices useful for assuring stress-resistant connections are described and their uses explained.

10. CONTROL NUMBER	11. PRICE OF DOCUMENT
PN-AAD-170	
12. DESCRIPTORS	13. PROJECT NUMBER
	14. CONTRACT NUMBER: PASA TA(CE)-04-73 Res.
	15. TYPE OF DOCUMENT

AID 590-1 (4-74)

NBS BUILDING SCIENCE SERIES 100

Building To Resist The Effect Of Wind

VOLUME 3. A Guide for Improved Masonry and Timber Connections in Buildings

U.S. DEPARTMENT OF COMMERCE • NATIONAL BUREAU OF STANDARDS

NBS BUILDING SCIENCE SERIES 100-3

Building To Resist The Effect Of Wind

in five volumes

VOLUME 3: A Guide for Improved Masonry and Timber Connections in Buildings

S. George Fattal

Center for Building Technology
Institute for Applied Technology
National Bureau of Standards
Washington, D.C. 20234

and

G. E. Sherwood and T. L. Wilkinson

Forest Products Laboratory
Forest Service
US Department of Agriculture
Madison, Wisconsin 53705

Sponsored by:

The Office of Science and Technology
Agency for International Development
Department of State
Washington, D.C. 20523

U.S. DEPARTMENT OF COMMERCE, Juanita M. Kreps, Secretary

NATIONAL BUREAU OF STANDARDS, Ernest Ambler, Acting Director

Issued May 1977

Library of Congress Catalog Card Number: 77-600013

National Bureau of Standards Building Science Series 100-3
Nat. Bur. Stand. (U.S.), Bldg. Sci. Ser. 100-3, 56 pages (May 1977)
CODEN: BSSNBV

U.S. GOVERNMENT PRINTING OFFICE
WASHINGTON: 1977

For sale by the Superintendent of Documents, U.S. Government Printing Office, Washington, D.C. 20402
Order by SD Catalog No. C13.29/2:100-3). Stock No. 003-003- Price $2.00
(Add 25 percent additional for other than U.S. mailing).

ABSTRACT

The Agency for International Development sponsored with the National Bureau of Standards, a three and a half year research project to develop improved design criteria for low-rise buildings to better resist the effects of extreme winds. This report contains information gathered from this project.

Project results are presented in five volumes. Volume 1 gives a background of the research activities, accomplishments, results and recommendations. Volume 2 presents a methodology to estimate design wind speeds and a guide to determine wind forces. Volume 4 furnishes a methodology to estimate and forecast housing needs at a regional level. Socio-economic and architectural considerations for the Philippines, Jamaica, and Bangladesh are presented in Volume 5.

This report investigates the use of connectors for masonry and timber elements in low-rise buildings. Connector characteristics and construction details that improve a building's response to extreme wind effects are given primary emphasis. Recommendations include improvements through better utilization of connector technology showing good feasibility of introduction in developing countries. The building systems considered in this study fall within the low to moderate cost category.

Key words: Codes and standards; connectors; fasteners; low-rise buildings; masonry walls; structural design; technology transfer; timber roofs; timber walls; wind effects.

Cover: A new housing project, formerl settlement, in Kingston, Jamaica.

Contents

ABSTRACT iii

1. BUILDING SYSTEMS
   1.1 Introduction 1
   1.2 Roof Systems 2
   1.3 Pole Type Construction 2
   1.4 Masonry Bearing Wall System 3
   1.5 Timber Wall System 3

2. MASONRY CONNECTORS 7

   2.1 Introduction 7
   2.2 Types of Masonry Construction 8
   2.3 Analysis of Wind Damaged Buildings 9
   2.4 Masonry Construction in Developing Countries 10
   2.5 Masonry Practices in the United States 11
      2.5.1 Available Masonry Connectors 11
      2.5.2 Available Technical Information 11
   2.6 Suggested Improvements in Masonry Construction 12
      2.6.1 Utilization of Available Connectors 12
      2.6.2 Improved Construction Practices in Severe Wind Environment 12

3. FASTENERS FOR TIMBER CONSTRUCTION IN HIGH WIND AREAS 27

   3.1 Introduction 27
   3.2 Available Timber Fasteners 28
      3.2.1 Nails, Screws, Bolts, and Lag Screws 28
      3.2.2 Timber Connectors 28
      3.2.3 Truss Plates 28
      3.2.4 Sheet Metal Fasteners and Other Special Devices 28
   3.3 Philippine Timber-Related Practices 28
      3.3.1 Pole Type 29
      3.3.2 Wood-Framed Wall and Roof 29
      3.3.3 Masonry Wall 29
      3.3.4 Roof Framing 29
      3.3.5 Roofing 29
      3.3.6 Protection From Wood-Destroying Organisms 30
      3.3.7 Summary of Good and Poor Practices 30
   3.4 Timber Fasteners Appropriate for Construction in Developing Areas With High Winds 30
      3.4.1 Pole-Type Construction 30
      3.4.2 Light Wood-Frame Construction 30
      3.4.3 Concrete and Masonry Construction 31
      3.4.4 Roof Framing 31
      3.4.5 ofing 31
   3.5 Fasteners for Fabrication by Indigenous People 31
   3.6 Summary 31
   3.7 A Caution 32

REFERENCES 47

ACKNOWLEDGMENTS 48

Figures

1. BUILDING SYSTEMS

Fig. 1 Common roof systems for low-rise buildings 3
Fig. 2 Pole-type construction 4
Fig. 3 Miscellaneous bamboo and non-dimensioned lumber connection details 5
Fig. 4 Masonry bearing wall construction 6
Fig. 5 Timber wall construction 6

2. MASONRY CONNECTORS

Fig. 6 Concrete masonry units 13
Fig. 7 Infill wall masonry construction 14
Fig. 8 Collapse of one-story building caused by the November 1974 typhoon in the Philippines 14
Fig. 9 Failure of metal anchor plate in building destroyed by the November 1974 typhoon in the Philippines 15
Fig. 10 Roof failure in building caused by the typhoon in November 1974, in the Philippines 15
Fig. 11 Single family houses damaged or destroyed by the typhoon in November 1970, in Central Luzon, the Philippines 16
Fig. 12 Single family house showing collapse of roof and exterior wall during the Philippines typhoon in November 1970 16
Fig. 13 Interior damage of single family house caused by the November 1970 typhoon in the Philippines 17
Fig. 14 Residential building in Darwin, Australia destroyed by the December 1974 cyclone 17
Fig. 15 Building of cavity wall construction in Darwin, Australia, partially destroyed by the December 1974 cyclone 18
Fig. 16 Building in Darwin, Australia showing partial collapse of roof and masonry infill walls caused by the December 1974 cyclone 18
Fig. 17 Failure of concrete block masonry wall in building subjected to the December 1974 cyclone in Darwin, Australia 19
Fig. 18 Single family masonry house under construction in Central Luzon, the Philippines 19
Fig. 19 Stacked bond concrete masonry wall construction for single family occupancy in Central Luzon, the Philippines 20
Fig. 20 Single family housing development in Central Luzon, the Philippines 20
Fig. 21 Concrete columns with concrete masonry infill walls being constructed for single family dwelling occupancy in Central Luzon, the Philippines 21
Fig. 22 Construction of single family housing unit in Central Luzon, the Philippines, showing concrete masonry filler walls and reinforcement of corner column 21
Fig. 23 Reinforced concrete masonry dwelling unit in Central Luzon, the Philippines 22
Fig. 24 Reinforced concrete masonry walls under construction for housing in Central Luzon, the Philippines 22
Fig. 25 Concrete masonry bearing wall construction with truss type roof for housing in Central Luzon, the Philippines 23
Fig. 26 Single family housing under construction in Central Luzon, the Philippines, showing concrete bond beam detail over openings 23
Fig. 27 CARE sponsored housing project near Dacca, Bangladesh showing cinva-ram wall construction with corrugated metal roofing 24
Fig. 28 Various metal anchors: (a), (b) tiebars with end hooks; (c) tiebar with hook and split hook; (d) tiebar with 90° twist; (e) corrugated dovetail tie; (f) corrugated tie; (g) dovetail tie with hook; (h) anchor bolt 24

Fig. 29 Application of metal anchors in masonry construction: (a) tiebar anchor to wood joists; (b) twisted anchor connecting wood joist to concrete masonry bearing wall; (c) tiebar anchor connecting concrete masonry intersecting walls 25
Fig. 30 Application of anchor bolt for masonry connection: (a) connection of sill plate to concrete masonry bearing wall; (b) connection of concrete masonry wall to wood stud wall 25
Fig. 31 Joint reinforcement in masonry walls: (a) truss; (b) ladder; (c) and (d) prefabricated corner section; (e) and (f) prefabricated tee section 26
Fig. 32 Horizontal reinforcement between intersecting masonry walls: (a) and (b) without bond beams; (c) and (d) with bond beam 26

3. TIMBER FASTENERS

Fig. 33 Various types of nails: A, bright, smooth wire nail; B, cement-coated; C, zinc-coated; D, chemically etched; E, annularly threaded; F, helically threaded; G, helically threaded and barbed; and H, barbed 32
Fig. 34 Joint with split-ring connector showing connector, precut groove, bolt, washer, and nut 32
Fig. 35 Joint with toothed-ring connector 33
Fig. 36 Joints with shear-plate connectors with A, wood side plates; and B, steel side plates 33
Fig. 37 Some typical truss plates 34
Fig. 38 Some examples of special fasteners made by the Timber Engineering Company ... 34
Fig. 39 Pole-type construction 35
Fig. 40 Wood-frame wall and roof 35
Fig. 41 Concrete block wall with wood frame roof 36
Fig. 42 Roof framing tied down with strips of bamboo 36
Fig. 43 Thatch roof with thatch partially blown off 37
Fig. 44 Covering material on the outside protects framing and connectors 37
Fig. 45 Anchor bolt and sill plate exposed to weather present decay hazards 38
Fig. 46 Metal strap on only one side of framing failed to resist bending load 38
Fig. 47 Collar ties hold rafters from pulling apart at the peak 39
Fig. 48 Ceiling joist bolted to rafter resists outward thrust of rafter. Wood cleats tie purlins to rafters 39
Fig. 49 Sheet metal strap nailed to one side of purlin and riveted to corrugated roofing .. 40
Fig. 50 Although the roof blew off of the structure, the corrugated roofing was effectively tied to purlins by wires completely around the purlins 40
Fig. 51 Joint failure due to decay in wood 41
Fig. 52 Staining from corrosion of bolts and nails 41
Fig. 53 Round pole notched for sawn framing member 42
Fig. 54 Two framing members butted end-to-end over flat notch and bolted to a pole 42
Fig. 55 Anchor bolt in concrete a minimum of 8 inches. Washer to spread load 42
Fig. 56 Anchor bolt through concrete block foundation into footing 42
Fig. 57 Anchor bolt installed on protected side of wall 43
Fig. 58 Sheet metal strap tying stud to bottom plate 43
Fig. 59 Sheet metal bracket for tying roof framing to walls 43
Fig. 60 Wood cleats nailed to each side of roof framing and to top plates 43
Fig. 61 Sheet metal strap nailed to ceiling joist and stud to anchor roof framing to wall .. 44
Fig. 62 Sheet metal bracket used to connect purlin to rafter 44
Fig. 63 Purlins tied to rafters by wood cleats 44
Fig. 64 Two metal straps riveted to corrugated roofing, lapped under purlin and nailed to purlin 44
Fig. 65 Multipurpose strap. Length and width can be varied for specific applications 45

Fig. 66 Galvanized sheet metal strap with rivet and washer for tying down corrugated roofing 45
Fig. 67 Multipurpose bracket fabricated from 20-gage galvanized steel. Bend either direction at bend lines to form desired bracket 45
Fig. 68 Split-ring connector for indigenous fabrication (left), and commercially produced split-ring connector (right) 46
Fig. 69 Plate connector with barbs 46

Facing Page: *Housing project near Manila, Philippines showing the application of indigenous building material.*

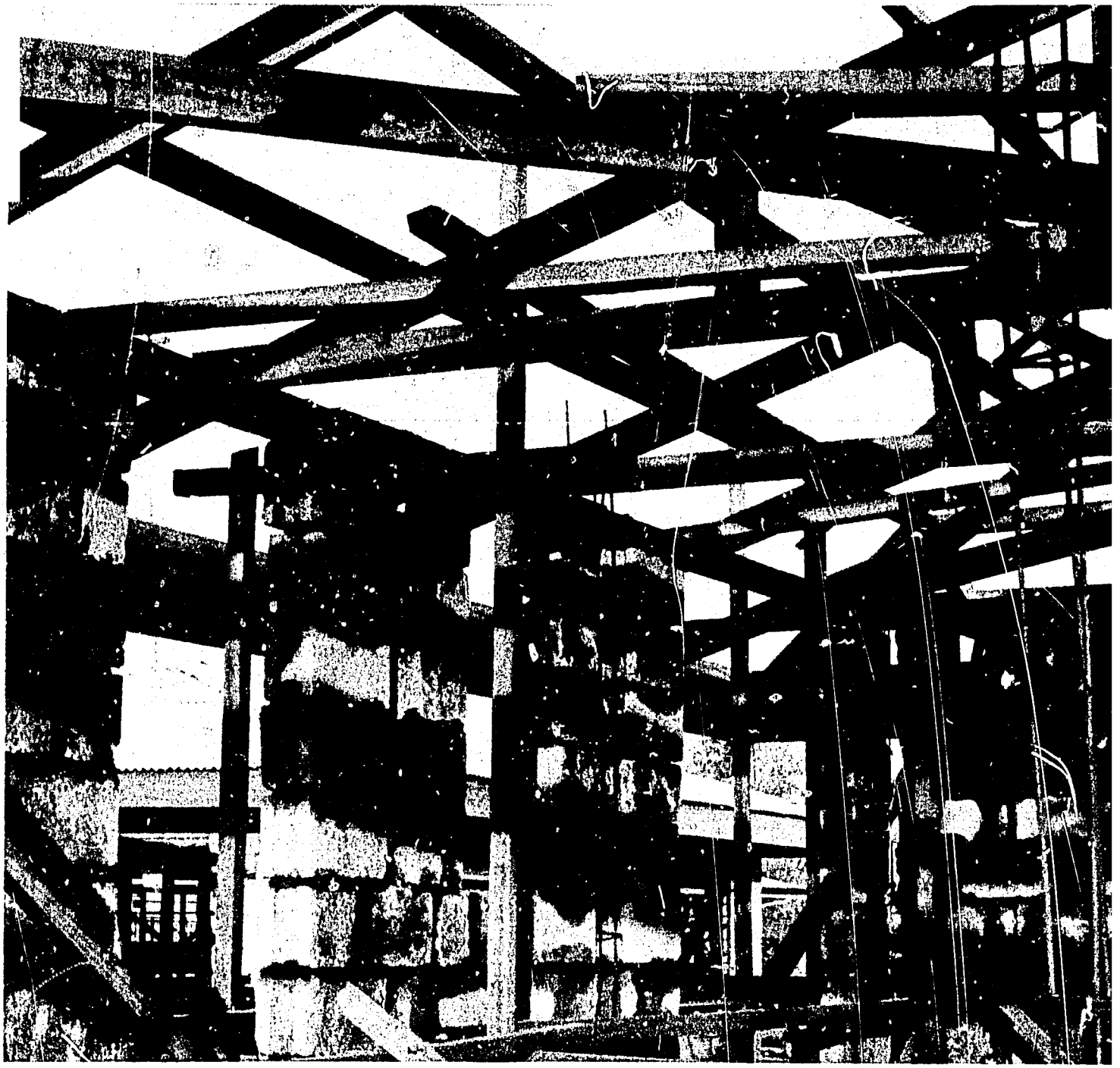

1. BUILDING SYSTEMS

by
S. George Fattal

1.1 INTRODUCTION

This report discusses the use of connectors in houses and other low-rise buildings to improve their structural response characteristics under extreme wind conditions. The report is organized into three main sections. Section 1 presents a general overview of mansonry connectors and timber fasteners. Section 2 is devoted to a detailed discussion of connectors in building systems using masonry wall construction. Section 3 treats fasteners used in buildings of timber wall construction. These two types of buildings are most prevalent in housing for low to middle income occupancy in developing countries located in wind-prone areas [1].[1]

[1]Numbers in brackets indicate references listed at the end of this report.

These buildings are typically one or two story detached units which are supported by a continuou wall footing made of cast concrete or concrete block masonry or, in flood-prone areas, by wooden poles embedded in the ground. The roof is commonly characterized by a pitched timber frame often projecting up to 1.5 m (5 ft) beyond the exterior walls, and topped by corrugated metal cover.

The types of building systems of interest to this study are identified by reference to figures 1 through 5, which also serve as key visual reference for locating specific connector details discussed in the subsequent sections of this report.

1.2 ROOF SYSTEMS

Figure 1 exhibits the two most commonly used framing systems for the roof: (a) the truss type and (b) the joist-rafter assembly. The truss type construction employs a series of equally spaced trusses spanning between opposite exterior walls. The corrugated metal roof cover is attached to a series of longitudinal purlins connecting the trusses together. The joist-rafter type consists of a system of inclined rafters framing into a ridge beam at the top and attached to ceiling joists spanning between opposite exterior walls at the bottom. Collar beams attached to the rafters provide stiffness to the roof in the vertical plane. The close spacing of the rafters permits direct attachment of roof cover to the rafters thereby eliminating the need to use purlins.

The choice of a particular roof system depends on many factors. A joist-rafter assembly allows better utilization of attic space while the truss system permits prior assembly of the individual trusses at the shop where quality control is generally better than in the field. Structurally, both systems can be designed to have the desired diaphragm capability to transmit lateral wind forces to the appropriate shear walls (having the same orientation as the wind as in figure 2, Reference [2]). For instance, diaphragm rigidity can be improved by introducing horizontal cross-bracing in the plane of the joists and vertical cross-bracing in the longitudinal ridge plane (perpendicular to the joists) of both systems shown in figure 1. A practical but somewhat more expensive alternative to the horizontal bracing would be to provide wood flooring fastened to the joists in a manner that will insure integral action in the horizontal plane.

The importance of diaphragm action for roof systems in extreme wind regions should be emphasized in the light of the types of roof and wall failures observed that were attributed to a lack of transverse rigidity of the roofing system, as noted in section 2. The use of timber fasteners for connecting roofing elements is discussed in section 3.

1.3 POLE-TYPE CONSTRUCTION

Figure 2 shows the structural layout of a pole-type construction. The raised floor protects the house against insect infestation and floods. This type of construction provides generally a lower cost housing than either masonry or wood frame wall system since it lends itself more readily to auto-construction (self-help). It also permits utilization of less expensive indigenous products such as nondimensioned timber (logs) for the poles, and cane (i.e., bamboo) framing with rattan or twisted cane connectors as shown in figure 3. The figure also illustrates suggestions for adequate joining of members. The poles should be treated against insect infestation and water penetration prior to being embedded into the ground. The length of embedment required to resist wind-induced uplift or overturning and to provide adequate bearing is determined by local soil conditions. Figure 2 shows footing schemes for the poles and for the dimensioned timber post used as an alternative. Note that shallower embedment will require more substantial footings for the same level of resistance against wind-induced uplift forces. The design should also account for the additional uplift forces under the exposed floor.

Since the poles are the main pillars of support for the superstructure, they should preferably extend to the top and be provided with adequate connections at the roof and at the floor level. Because of their unsupported length between the raised floor and the ground, these poles should be proportioned to provide adequate flexural resistance to lateral forces induced by extreme winds. If this is not altogether feasible from a practical design standpoint, vertical cross-bracing made of wood, bamboo or wire cable should be introduced to tie the poles together below the floor level. Cables and various tiedown straps used in the United States to protect mobile home installations against extreme winds should also be explored for use in buildings on poles to provide additional stability against uplift and overturning forces. Information on available tiedown and anchoring devices may be acquired from the Manufactured Housing Institute.[2] Design provisions for mobile home tiedowns are prescribed in Chapter 6 (1974) and appendix D (1975) of ANSI A119.1[4], and reference [5] supplies guidelines for their design. Section 3 discusses fasteners used in pole-type housing. Supplementary information on pole-type construction and the structural use of bamboo may be acquired by consulting references [6] and [7].

---

[2]Manufactured Housing Institute, P.O. Box 201, Chantilly, Virginia 22021.

1.4 MASONRY BEARING WALL SYSTEM

Figure 4 displays the structural layout of a masonry bearing wall building system. The single wythe walls (defined in section 2.2) are built with hollow concrete masonry units which permit the passage of vertical reinforcement without the need of addtional wythes. Note that alternate schemes are available for constructing lintels and peripheral (or collar) bond beams. They are indicated in the same figure for generality and convenient referencing purposes.

It was noted earlier that the type of masonry discussed in this report is generally representative of masonry housing construction in developing countries [1]. This makes it unnecessary to consider diverse masonry systems such as multiple wythe construction (to permit vertical reinforcing when solid units are used) or masonry veneers and other nonloadbearing elements. However, section 2 does consider one additional masonry system (generally referred to as an "infill frame") which consists of a concrete frame with masonry filler walls.

1.5 TIMBER WALL SYSTEM

Figure 5 shows a partial view of a timber "stud" wall system. The studs or "verticals" transmit gravity loads and the vertical component of wind-induced loads which may be reversible (bearing or uplift). In addition, the studs provide flexural resistance against direct horizontal wind pressure or suction. The diagonals stiffen the walls in their own planes and increase the capability of the system to resist lateral loads. The specfic fastener details for the stud wall system are discussed in section 3.

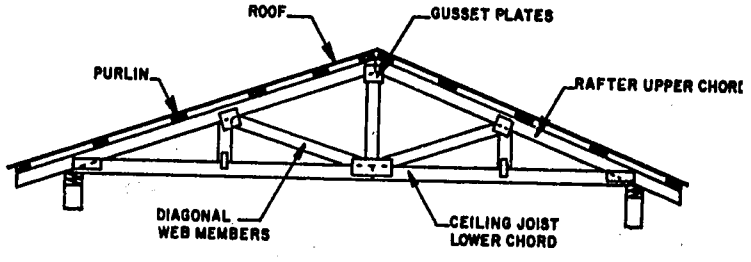

(a) TRUSS ROOF SYSTEM

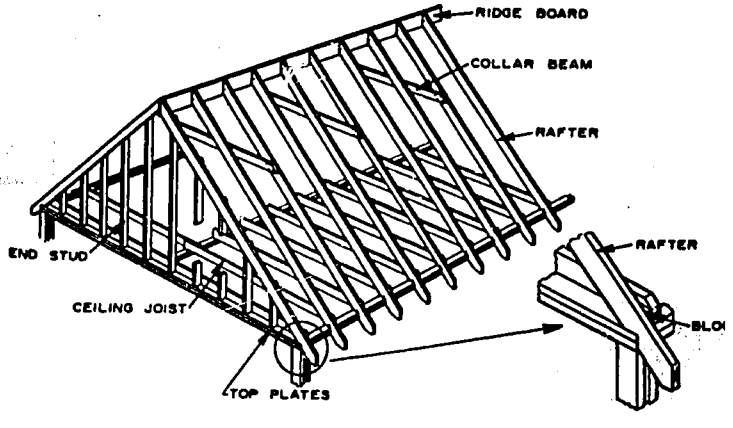

(b) JOIST-RAFTER ROOF SYSTEM

FIGURE 1 COMMON ROOF SYSTEMS FOR LOW-RISE BUILDINGS.

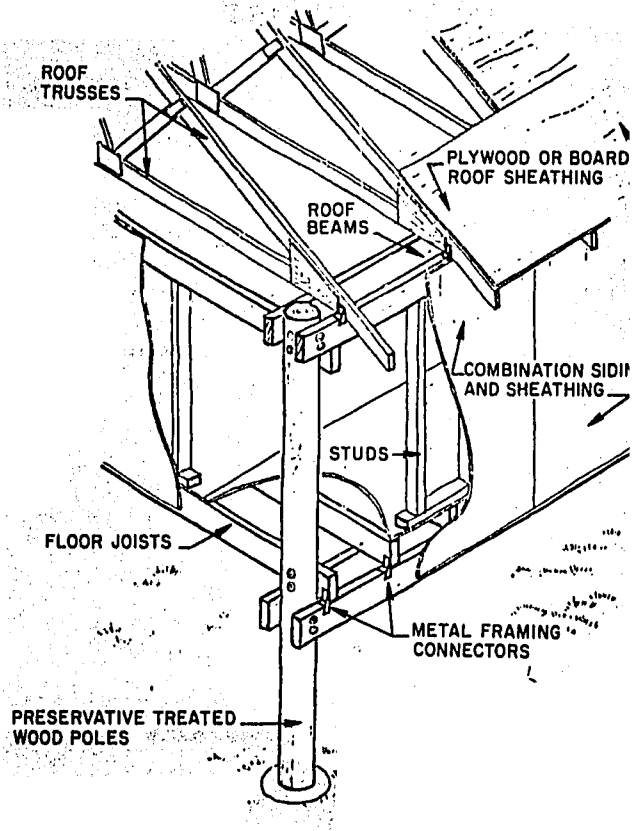

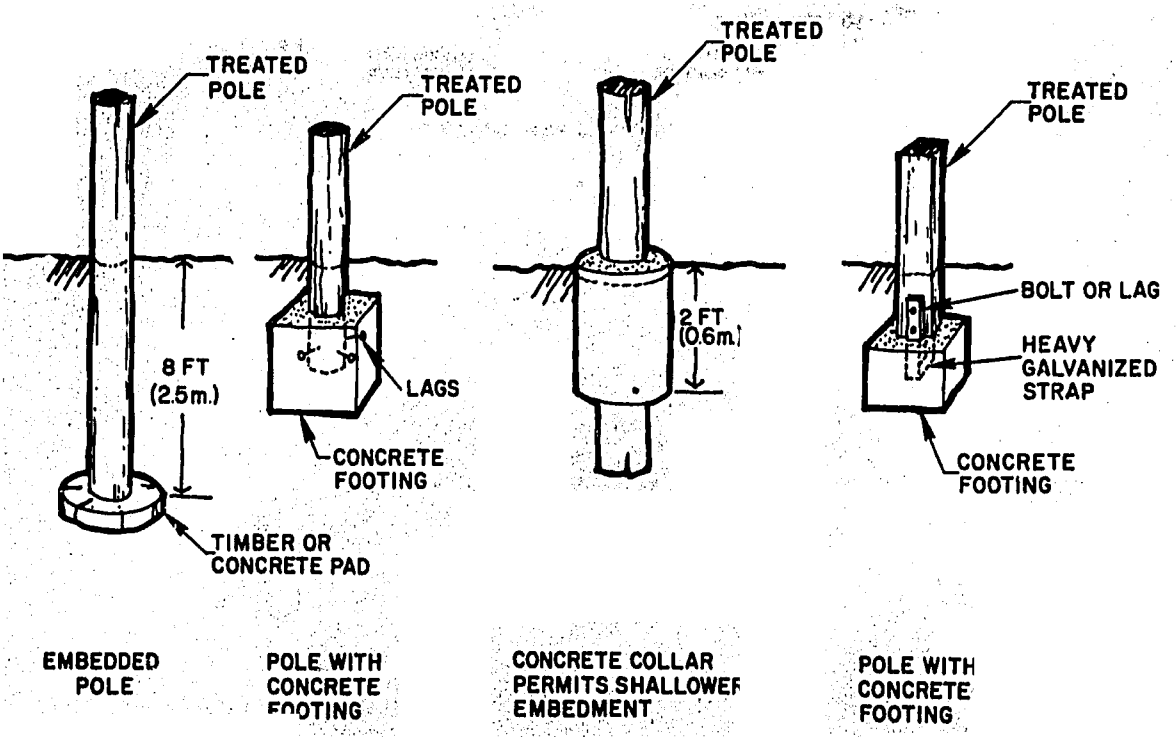

FIGURE 2 POLE-TYPE CONSTRUCTION

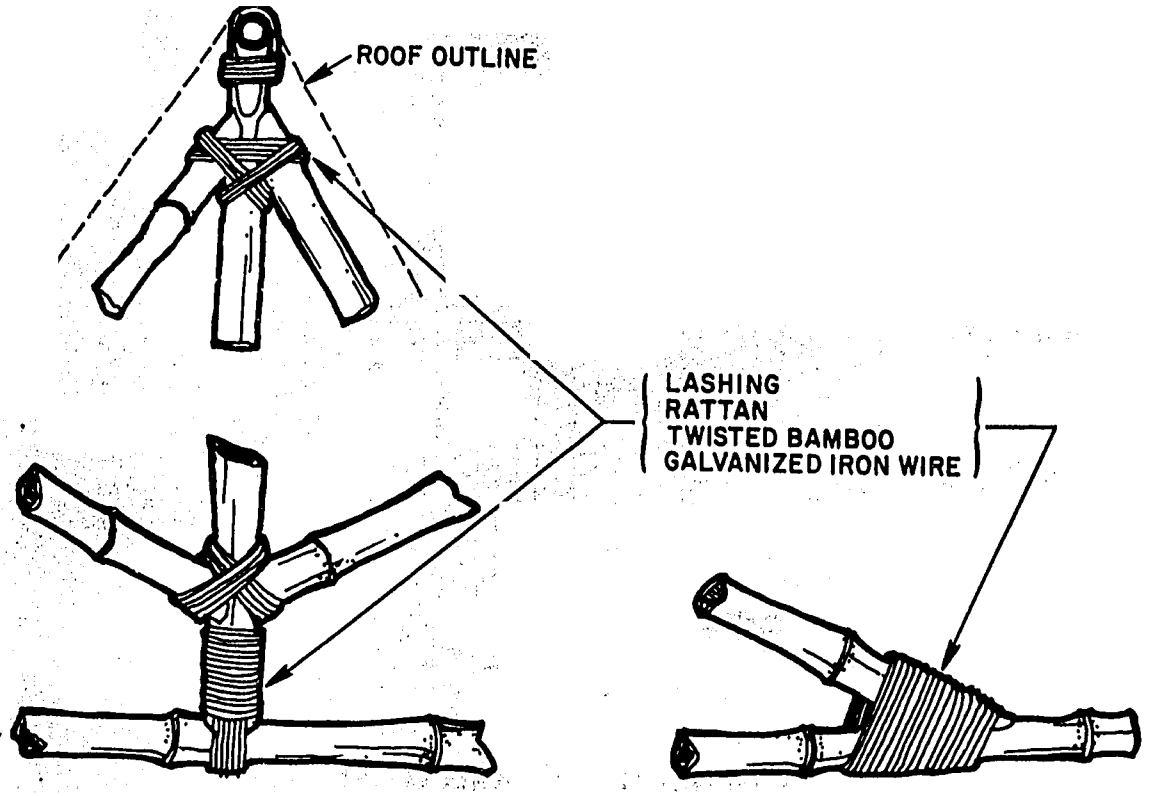

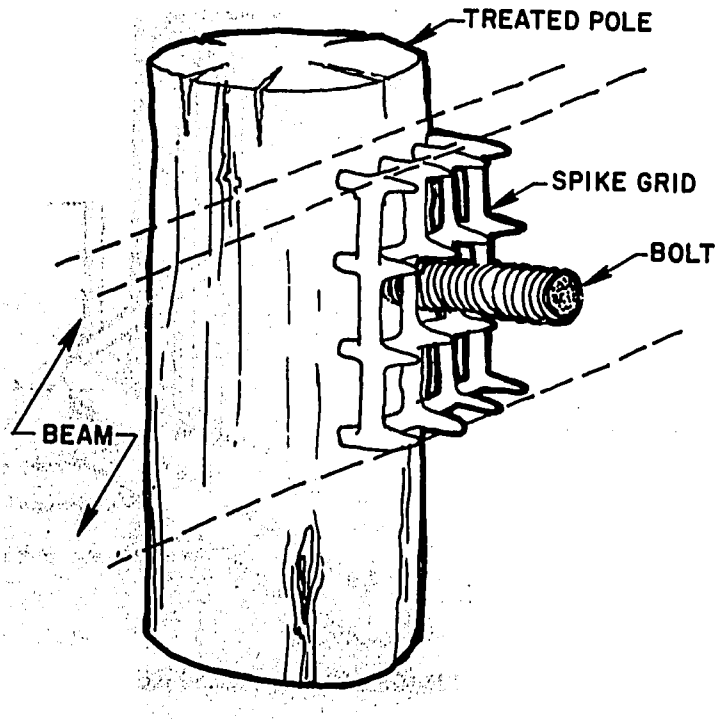

FIGURE 3 MISCELLANEOUS BAMBOO AND NONDIMENSIONED LUMBER CONNECTION DETAILS.

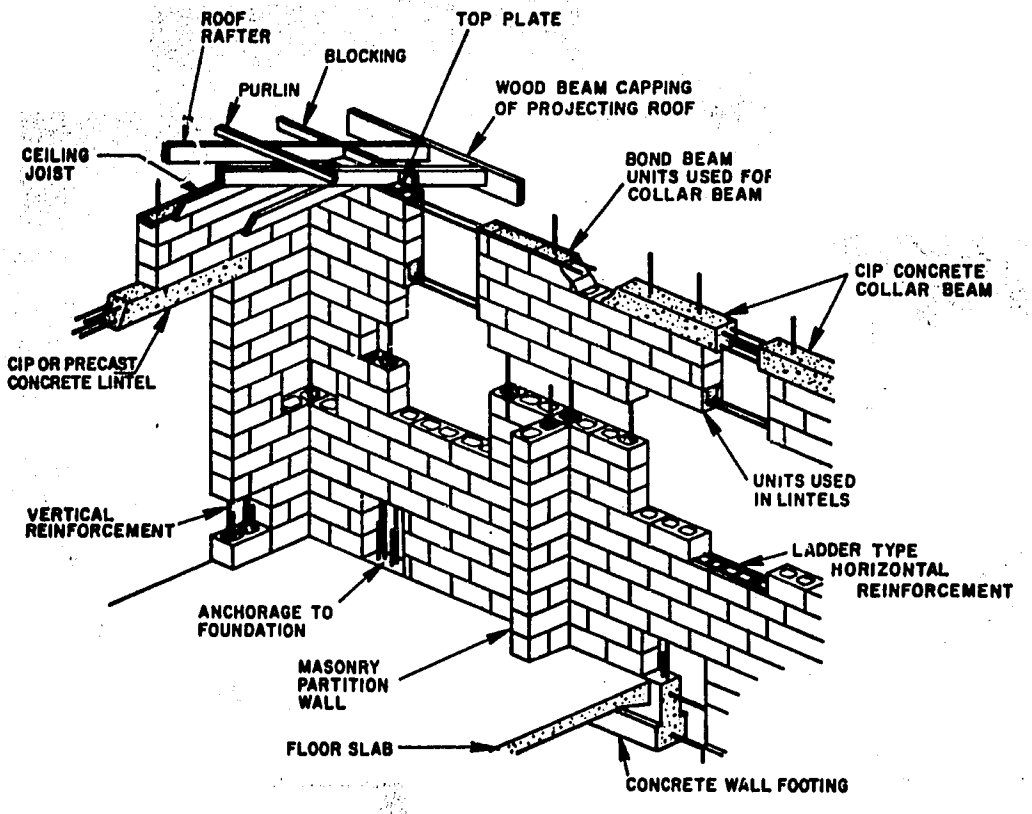

FIGURE 4 MASONRY BEARING WALL CONSTRUCTION.

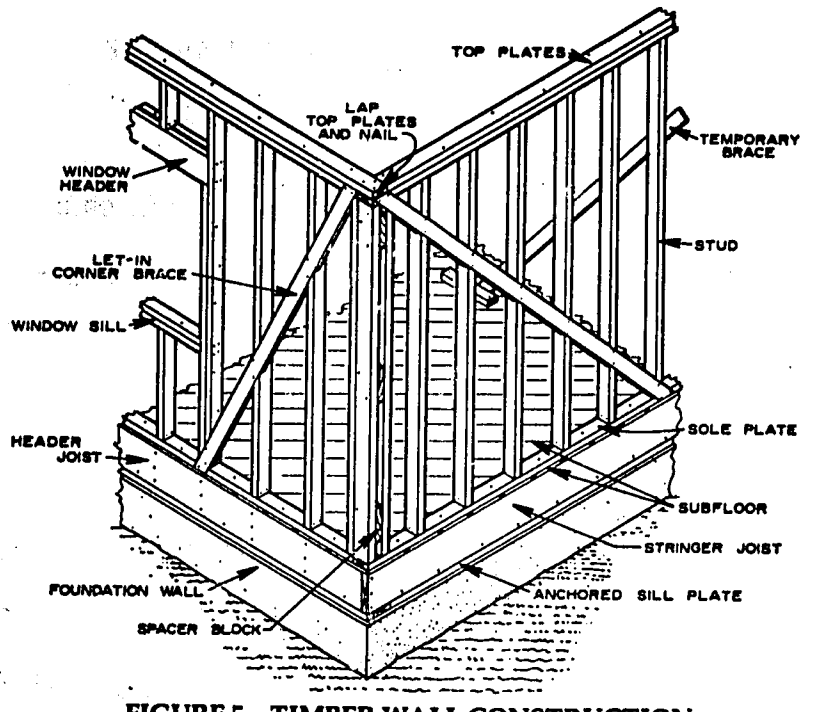

FIGURE 5 TIMBER WALL CONSTRUCTION.

Facing Page: These reinforcing bars add strength to the building frame and insure a positive connection between the roof and walls.

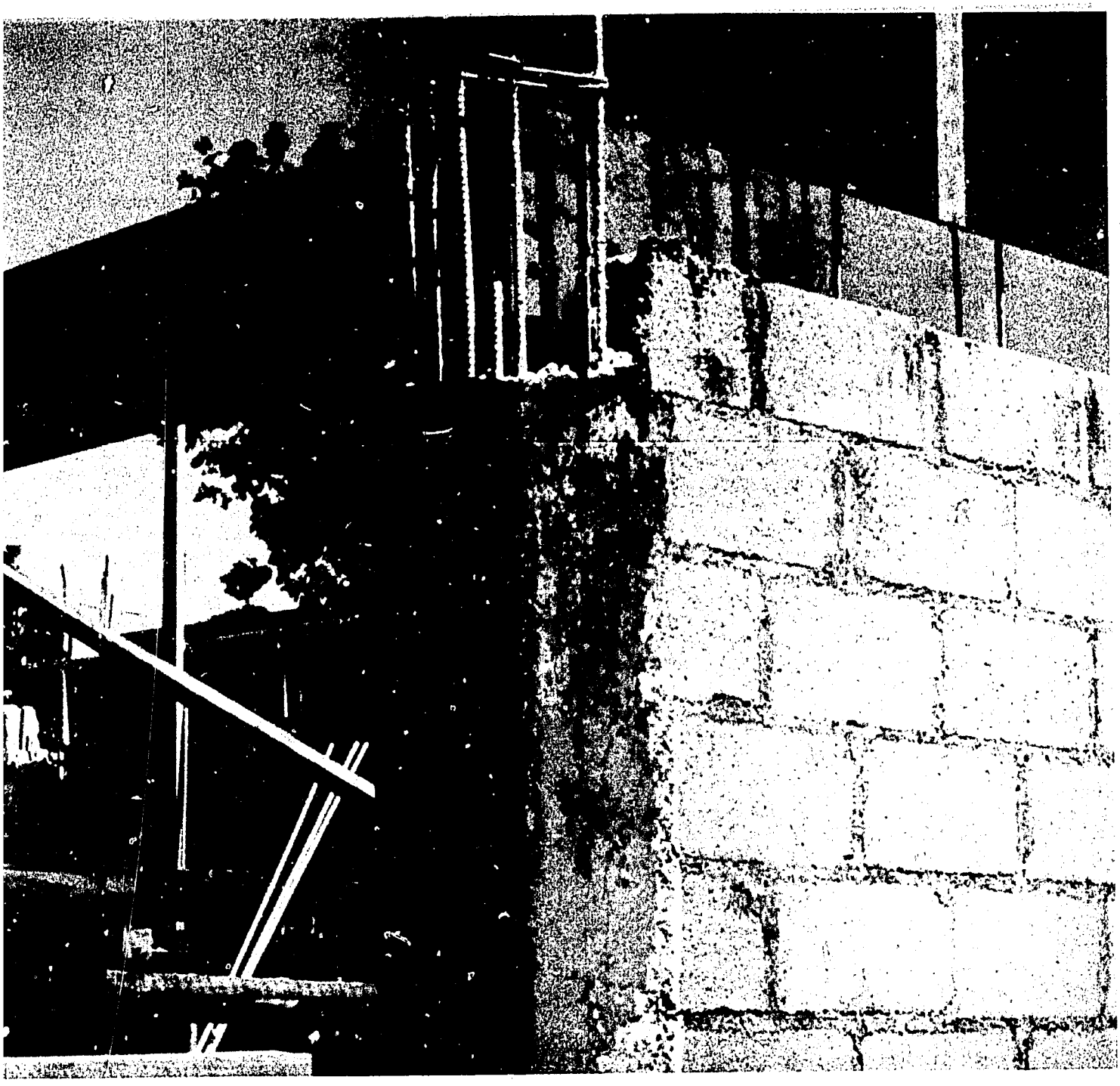

2. MASONRY CONNECTORS

by
S. George Fattal

2.1 INTRODUCTION

This section discusses the use of masonry connectors in bearing wall construction for improved structural response under severe wind conditions. The structures considered are low-rise buildings (i.e., dwellings, small business stores, community centers, schools) in developing countries. For the purpose of this section the word "connector" is used to designate any mechanical device, including reinforcing bars, which can be effectively used to connect individual masonry walls to the other elements of the system (walls, columns, beams, partitions, roof or foundation).

The material in this section consists of an introductory discussion giving background information on masonry construction, exhibits and analyses of buildings damaged by extreme winds, a survey and evalua-

tion of current masonry practices in developing countries experiencing high winds, a study of current masonry practices in the United States relating to high winds and earthquakes with a discussion of various types of masonry connectors employed in such construction, and general and specific recommendations for improving high wind response of masonry buildings in developing countries through better utilization of existing connector technology.

2.2 TYPES OF MASONRY CONSTRUCTION

Masonry bearing walls used in low-rise buildings in developing countries are commonly built with hollow concrete masonry units. Figure 6 shows some of the common types of masonry units used in the United States [8]. Although the standard unit shown has 2 cores, 3-core units are also quite common in the United States as in the Philippines and other developing countries. In running bond construction (vertical joints staggered), it is somewhat easier to place vertical reinforcement through the 2-core units because the cores are in vertical alignment. They are also more modular than the 3-core units (less number of shapes and sizes are required in construction). For additional information, detailed classifications of concrete masonry are found in ASTM Designations C90, C129, C140, C145 and C331 [9].

Masonry units are laid in mortar which acts as their binding agent. Prevailing types of mortar in the United States are cement-lime-sand and masonry cement-sand mortars. Different proportions of the constituents in these types will produce different strength properties. Standard mortar designations, such as types M, S or N are used for the appropriate mortar identification according to the range of constitutent proportions, by volume, specificed in ASTM Designation C270 [9]. Types M, S, and N are commonly used for structural masonry applications. Types M or S are specified for high flexural strength requirements. Various other specifications for mortar and mortar ingredients are found in ASTM Designations C5, C91, C109, C110, C144, C157, and C207[9].

Masonry walls are classified according to type of construction and intended use in a building. A *single wythe wall* has one masonry unit in its thickness. A *multiple wythe wall* has several masonry units in its thickness. In a *composite wall* construction, at least one of the wythes is built with masonry units dissimilar from those in the neighboring wythes. Multiple wythe walls without cavity are laid contiguously with the spaces between the wythes, called *collar joints*, filled with mortar or grout. To insure monolithic action of the assembly, additional bonding is effected by the use of *metal ties* laid horizontally in bed mortar across the wythes at periodic intervals throughout the height of the wall. A *cavity wall* is identified by a continuous vertical air space between any two adjacent wythes and by metal ties laid as in composite wall construction and connecting the two wall sections flanking this space. *Reinforced masonry walls* built with solid units are reinforced by placing steel bars, vertically and/or longitudinally, as needed, in the space between consecutive wythes and by grouting this space. In hollow block walls, such as those studied in this report, vertical reinforcement may be placed as needed, through the hollow cores which are then grouted.

The following types of masonry walls are identified by their intended function in a building. A *load-bearing wall* supports the vertical loads above it, in addition to its own weight, with or without the aid of a vertical load-carrying space frame. A *nonload-bearing wall* supports no vertical load other than its own weight. A *shear wall* resists planar forces induced by exterior horizontal loads acting on a building. A *curtain wall* is a non-load bearing wall, built outside the building frame and not entirely supported at each floor. A *panel wall* is a non-load bearing exterior wall supported at each floor. A *partition* is a non-load bearing interior space divider which will function as a shear wall unless isolated along three edges from the rest of the structure. *Veneer* is the exterior masonry layer of a two-layer wall system, connected to the interior layer and/or to the primary load-supporting structure by horizontal ties. Veneer is generally designed to be non-load bearing. A *pier* is a masonry wall segment flanked by two adjacent openings or by an opening and the vertical edge of a wall. A *lintel* is a wall segment above an opening.

A masonry *filler wall* or *infill wall* designates a wall fully enclosed within a structural frame or bounded by two columns and wholly supported at each floor level. Filler walls may be load-bearing or non-load bearing depending on the type of construction. In the United States, filler walls are generally non load bearing because they are usually laid after the frame has been erected so that only mortar bond exists at the interface. Figure 7 shows another type of filler wall construction where the walls are laid first on top of a wall footing, followed by casting of the concrete columns and peripheral bond beam. This scheme permits extension of horizontal and vertical wall reinforcement into the surrounding frame so that the assembly will act integrally under superimposed loading. This system is widely used in the Latin American countries and has shown good performance under severe earthquakes in the past.

The latter type of infill wall construction and the single wythe masonry bearing wall construction shown in figure 4 are the two types of masonry systems considered in this Volume.

2.3 ANALYSIS OF WIND DAMAGED BUILDINGS

Figures 8 to 17 exhibit buildings damaged or destroyed by recent hurricanes and typhoons. The buildings shown in figures 8 to 10 belong to a group of one-story structures in Northern Luzon, the Philippines, which either sustained severe damage or collapsed as a result of the November 1974 typhoon. These structures consisted of masonry walls and wood posts, a pitched roof system of wood trusses, purlins and corrugated iron cover, and a continuous foundation wall of cast concrete.

Figure 10 exhibits a typical failure of the fasteners connecting the purlins to the top chords of the trusses. Most of the roofing was "peeled off" in this manner. Portions of the corrugated iron roofing found on the ground contained the purlins with their metal wire attachments still in place (fig. 50). Instability of the trusses, few of which were still standing, was attributed to the loss of purlins and the absence of other longitudinal bracing between the trusses. The collapse of the masonry walls as shown in figure 8 was likewise attributed to the loss of lateral support at the roof level. However, the extent and severity of wall damage is also attributed to the absence of connections between abutting walls and the ineffectiveness of the vertical anchorage at the base. As indicated in figure 9, the only anchorage consisted of steel plates bolted to the wood posts. Close inspection revealed severe corrosion of these plates, especially at the ruptured section through the bolt-holes (fig. 9). The masonry walls in these buildings were nonload-bearing as they were stopped short of the roof to provide openings at the top (fig. 8). Thus the wood posts were the only vertical load-bearing elements and with the loss of the roof many of the corner posts were tipped over (fig. 8).

Figures 11 to 13 show single family housing units of concrete masonry bearing wall construction, located in Central Luzon, the Philippines, that were damaged or destroyed by the November, 1970 typhoon. An inherent weakness of these systems is the absence of peripheral support of the masonry walls at the top because of a local preference for large openings at these locations. This practice reduces the effectiveness of the roof to function as a diaphragm and makes it more susceptible to failure by wind suction or uplift. As indicated in figure 11, most of the roofs of these units were removed by the storm. Inspection of figures 12 and 13 indicates good quality workmanship was used in constructing the masonry walls which contained vertical reinforcement in grouted cores. Note that the nails between the top window frame insert and the wall below or the peripheral wood joist above were not effective in preventing the masonry wall from caving in (fig. 13) or in keeping the inserts from falling down (fig. 12). In fact, there is no evidence that any fasteners were used between the wall panel (in the background of fig. 12) and the peripheral joist on top which was probably removed together with the roof by the storm.

Figures 14 to 17 exhibit structures consisting of different types of masonry wall systems that sustained severe damage or were destroyed by the December 1974 cyclone in Darwin, Australia. These structures represented engineered masonry construction with respect to the quality of workmanship and adherence to Australian masonry codes and standards (which are comparable to those in the United States). The Darwin experience demonstrated that compliance with current standards does not necessarily produce a structure capable of resisting the estimated 65 m/s (150 mph) winds experienced during this storm. However, it does indicate the need to reexamine the existing provisions with the objective of developing improved design criteria, connection details, and construction practices in order to mitigate the extent of damage associated with extreme winds.

A damage study of the Darwin structures reveals some features worthy of note. In figure 15, it appears that failure occurred at the fourth bed joint from the top, in the inner concrete masonry wythe of the double-wythe cavity wall. Since the inner wythe is the loadbearing component, its failure was probably caused by an outward thrust of the roof under the action of wind. The tilted position of the inner wythe with its top leaning against the brick facing indicates the absence of ties between the wythes near the roof level. The masonry wall in fugure 14 consists of two concrete block wythes with a cavity in between. The condition of the reinforcement demonstrates the ineffectiveness of the light-gage ties in assisting the integral functioning of the two wythes in out-of-plane flexure.

Figure 16 shows an infill wall construction with a steel frame and concrete masonry filler walls. There is no visual evidence of any reinforcement having been used in the filler walls. Note the severity of vertical cracking through the wall on the right and also the separtion between the steel column and the wall at the left. It is not possible to establish by examination of the figure whether there were any connectors between the steel columns and the filler walls. Figure 17 shows the portion of a concrete masonry wall under the sill of a large window opening that has failed. Note that the top course was connected to the window frame with anchor straps embedded into the grouted cores. It is likely that failure was caused by the movement of the window frame, prying the top course loose from the rest of the wall.

2.4 MASONRY CONSTRUCTION IN DEVELOPING COUNTRIES

The following discussion pertains to masonry buildings representing the types of construction used in developing countries. Local practices, utilization of building products, standards compliance, etc., are discussed and evaluated with the aid of exhibits of buildings at various levels of completion.

Figures 18 and 19 show two different stages of construction of a single family house located in Central Luzon, the Philippines. The walls are built with 3-core concrete block units (some of which may be seen lying on the ground in fig. 18). The units are laid in stacked bond to permit placement of reinforcement through the vertically aligned cores. On the basis of figure 19 the quality of masonry construction is deemed inferior by existing masonry standards. Some of the deficiencies noted are: (1) use of defective units, (2) partially filled and non-uniform mortar joints, (3) insufficient horizontal reinforcement for stacked bond construction, and (4) insufficient lintel reinforcement above the openings. It should be pointed out, however, that this system utilizes a peripheral concrete bond beam cast directly above the lintel course (see fig. 18). From the standpoint of overall structural integrity in a severe wind environment, attention is drawn to the practice of using large roof overhangs which are particularly susceptible to wind damage as they are subjected to a positive pressure from below and suction from above [2]. A potentially critical condition also exists in the masonry column supporting a larger overhang at the corner of the landing. Unless substantial top and bottom anchorage and vertical reinforcement is supplied in the column, which is not likely to be the case, given the limited available core space in the single unit section, there is a high probability that the column will fail under the impact of windborne missiles and /or uplift forces exerted by the roof in a severe windstorm.

Figure 20 shows completed single family houses in another project located in Central Luzon, the Philippines. Figures 21 and 22 display the infill wall construction of a typical unit which is judged to be superior in the overall quality of construction as well as wind-resistant capacity to that shown in figure 18. Structurally sound features include: (1) the use of running bond (vs. stacked bond) masonry construction with vertical and horizontal reinforcement, (2) adequate connections between neighboring elements and (3) the practice of casting the column concrete after completion of the infill walls. With regard to item (2), note for instance, in figure 21, that the vertical bars extend beyond the top of the column and the walls to provide connection to the roof. A structurally marginal practice identified by reference to figure 22, is the manner in which the lintels are built. A wood form is shored at the top to give the desired height of opening, and the space is filled with broken concrete block remnants and mortar. After setting, the metal window frame is fitted into the opening. probably the window frame is relied upon to carry the weight of the lintel above it in addition to any loads transmitted from the roof. It is not known whether any horizontal reinforcement was placed in the courses above the lintel; none appear to be projecting into the adjacent corner column.

Another example of reinforced masonry bearing wall construction used in the Central Luzon area of the Philippines is the house shown in figure 23. Although it is quite similar to the first systems discussed above (fig. 8), there are some major differences that make it a more viable system structurally. For instance, the use of lintels cast integrally with the bond beam (figs. 25 and 26) gives better integrity to the system. Likewise, the hip roof is essentially a space truss which has a better diaphragm capability because it is braced in both horizontal directions. Also note that the amount of reinforcement (fig. 24) is more substantial, the masonry and workmanship is of a better quality and better connections are used between the roof and wall elements. The common inherent weaknesses are: the use of slender columns made by stacking single units (fig. 23) and excessive projections of the roof overhangs.

Figure 27 shows a house built in Bangladesh by CARE, Inc., consisting of walls and pilasters built with cinva-ram[1]—masonry units. The wall footings are built wider than the walls and are raised above ground to protect the house against floodwater. One of the attributes of this house is its low cost; it lends itself to self-help construction since the skills needed to produce cinva-ram are minimal. One disadvantage of this construction is the difficulty of reinforcing it economically. Since cinva-ram units are solid, double wythe walls are needed for the placement of bars. This can be compensated to a certain extent by using thicker walls built with larger units.

The foregoing case studies, which were based on information gathered from field surveys of ongoing construction projects, indicate the need for a broader dissemination of existing literature on building construction practice to the public. The reference section lists some of this information that is available through local sources such as the Philippine Standards Association [15 to 18], the Association of Structural Engineers of the Philippines [20], the Philippine Bureau of Standards [13, 14], and the Caribbean Council of Engineering Organizations [27].

---

[1]Units made by pressing a mixture consisting mostly of clay and cement into rectangular units which are then dried in the sun.

2.5 MASONRY PRACTICES IN THE UNITED STATES

2.5.1 Available Masonry Connectors

Among the broad variety of connectors available for use in masonry construction, a significantly large number are utilized for non-structural applications such as for attachment of facing panels, hangers and miscellaneous appendages. Others are used in dual wall systems such as cavity walls, wood framing with masonry veneer and two-wythe walls with reinforced and grouted collar joints. Both of these categories are excluded in this study since they do not relate to the single wythe bearing wall construction most commonly used in developing countries.

Figure 28 shows a variety of metal anchors used to tie masonry walls to interconnecting elements. Tiebars come in different sizes and shapes for diverse applications. Where used to provide lateral support between abutting bearing walls, 6-mm (1/4-in) tiebars with end hooks are typically placed in alternate courses with the bent ends embedded in cores filled with mortar or grout as illustrated in figure 29(c). A twisted bar without end hooks is used to tie floor or roof joists to the concrete masonry bearing surface as shown in figure 29(b). These joists are supported laterally, at specified intervals, by the masonry walls of the same orientation, with tiebars as indicated in figure 29 (a). Tiebars used in pairs provide an effective means of anchoring the roof to the walls. At the top the hooks are lapped and nailed to the rafter or the top chord of the roof truss. At the bottom, they are embedded in concrete bond beam or, in the absence of a concrete bond beam, into the grouted cores of the concrete blocks in the top course. Steel reinforcing bars can also be used for this purpose. In either case, proper care should be exercised to protect exposed metal surfaces against corrosion.

Plain or corrugated dovetail bars shown in figures 28(e) and (g) are made of lighter gage metal than the tiebars and are used to tie masonry walls to walls or columns. These anchors require special metal duct inserts in the concrete to receive the dovetail end in interlock. Although dovetail anchors are generally designed for non-load bearing masonry wall connections, they provide some measure of resistance against pullout forces. The corrugated dovetail tie with an end hook shown in figure 28(f) provides an effective means of anchoring door and window frames to the masonry walls.

Anchor bolts such as the one shown in figure 28 (h) are mainly used to connect wood elements to the masonry. The bent end generally gives more holding power for the same length of embedment than the head of a standard straight bolt. Figure 30 illustrates two anchor bolt applications: (a) anchorage of sill to masonry wall and (b) anchorage of stud wall to masonry wall. Also consult figures 55 and 56 which illustrate the use of anchor bolts to connect a stud wall system to cast concrete slab footings and concrete masonry foundation walls.

Figure 31 shows reinforcement designed for placement in the horizontal joints of masonry walls. The two common shapes are the truss and the ladder shown in (a) and (b), respectively. This reinforcement is fabricated from light-gage, cold-drawn steel and consists of two longitudinal rods welded together by cross rods. Joint reinforcement is used as a means to prevent or control cracking in masonry walls and to improve their tensile strength in horizontal flexure.

The use of joint reinforcement is strongly recommended in walls of stacked bond construction which are prone to develop cracking in service along the vertically aligned mortar joints. A good practice is to use them in alternate courses in stacked bond construction and in every third course in running bond construction. Special prefabricated units are also available for continuous reinforcement around corners as in figure 31(c) and (d), and for tying abutting walls and partitions as in figures 31(e) and (f).

There are a large number of manufacturers of masonry connectors. The best source of obtaining names of manufacturers is *The Thomas Register* [26] and the best source of obtaining product information is *The Sweet's Industrial Construction Catalog* [3]. The pertinent data supplied by the manufacturer include descriptions of the available products, their application, technical data and level of acceptance by building regulatory agencies.

2.5.2 Available Technical Information

The design and construction of masonry buildings are governed by the provisions of various regulatory documents. Among these, the principal one for concrete masonry is the NCMA Specification [28] which comes with a Commentary [29] giving the rationale behind its provisions. The ACI Committee 531 report [30] contains proposed recommendations for concrete masonry structures that have been referenced by Jamaican sources [1]. This committee is currently preparing a revised code for concrete masonry. Provisons for masonry in general, are prescribed in ANSI A41[31] and the *Uniform Building Code* [32].

Information of a less technical nature is contained in reference [33] published by NCMA, which provides guidance for vocational training in concrete masonry. NCMA also publishes a TEK series [34] which supplies technical information on design, construction and detailing aspects of concrete masonry.

Experimental and analytical research work on concrete masonry conducted at the National Bureau of Standards is described in various publications media with the more recent ones included in the reference list [35 to 39]. Additional sources of information on concrete masonry-related practices are also listed [40 to 46].

2.6 SUGGESTED IMPROVEMENTS IN MASONRY CONSTRUCTION

2.6.1 Utilization of Available Connectors

Improvements in building construction can be effected through better utilization of available masonry connectors. The methods include the use of tiebars as an expedient means of anchoring masonry walls together as well as to roof and foundation elements. Bars of 3 to 6-mm (1/8 to 1/4-in) thickness which should be locally available in many developing countries can be bent or twisted to give them the desired configuration by labor-intensive methods much in the same manner as is employed to hook reinforcing bars in the field.

It was previously noted that connections effected by tiebars may also be accomplished by using plain or deformed reinforcing bars which are generally more readily available than tiebars. To be effective, exposed reinforcing bars should be resistant to corrosive agents. Where used to connect the roof to the masonry walls, reinforcement should have sufficient embedment in concrete or grout-in-core at the bottom, and should preferably extend over and around the connecting roof element and be secured on both sides by straps nailed to the wood.

To provide anchorage between intersecting walls, reinforcing bars formed into a loop or hooked at both ends may be placed in bed mortar for construction without using bond beams as indicated in figures 32(a) and (b). Where bond beams are utilized, a more substantial anchorage may be effected by bending and extending the bars into the neighboring walls as indicated in figures 32(c) and (d). Likewise, walls may be connected to the foundation by dowels embedded in the footing (bent dowels are preferable) and extending into the grouted core of the wall and lapping with the vertical reinforcement.

2.6.2 Improved Construction Practices in Severe Wind Environment

Improved structural response in a severe wind environment may be achieved through practices which have been identified through past records to be more effective during natural disasters. The more important aspects are:

1. Use of peripheral bond beam connecting all load-bearing masonry elements together. Alternate construction schemes include the use of a cast concrete beam and the use of bond beam masonry units through the top course (fig. 4). Both schemes permit placement of horizontal reinforcement to achieve better integrity at the top. It should also be mentioned that a substantial bond beam relieves the walls from resisting forces in out-of-plane flexure and supplements the diaphragm rigidity of the roof.

2. Use of appropriate lintels and connections between lintels and the rest of the walls. Alternate cast-in-place and precast lintels are indicated in figure 4. A most effective means of achieving continuity of lintels is to cast them integrally with the bond beam as indicated in figure 25.

3. The need for adequate diaphragm capability of the roof cannot be overemphasized. The roof system should preferably be braced in both directions to achieve a measure of diaphragm rigidity which is needed to transmit lateral wind loads to the appropriate shear walls below.

4. The use of slender vertical elements such as those built with single stacked concrete masonry units to provide columns for the support of large roof overhangs at reentrant corners or landings should be avoided in a severe wind environment. This restriction is necessary because these elements are highly susceptible to impact by flying debris and uplift transmitted from the roof.

5. Large roof overhangs serve as vehicles for attracting and transmitting higher uplift forces to the system and therefore require more substantial construction provisions against high winds. Considerations such as aesthetics, shading provisions and social preferences of dwelling environment should be traded off against practicability of design and increased costs associated with such practices to arrive at a reasonable compromise.

6. Overall integrity of the system should be assured by providing continuity between vertical wall reinforcement and the roof and foundation through appropriate utilization of reinforcing bars and anchor bolts and by providing continuity between intersecting walls by means of tiebars and/or horizontal reinforcement grouted within a bond beam course and extending into the neighboring walls and partitions.

7. The use of infill wall construction in building systems under a severe wind environment should be encouraged. The masonry infill walls should be laid first on top of a cast concrete wall footing and

attached to it by means of dowels lapped a sufficient distance with the vertical reinforcement placed into the grouted cores of the hollow blocks. Horizontal and vertical reinforcement should project from the sides and top of the filler walls to achieve continuity with the surrounding concrete frame which should be cast last.

Length Conversion

1 in = 25.4 mm
1 in = 0.0254 m

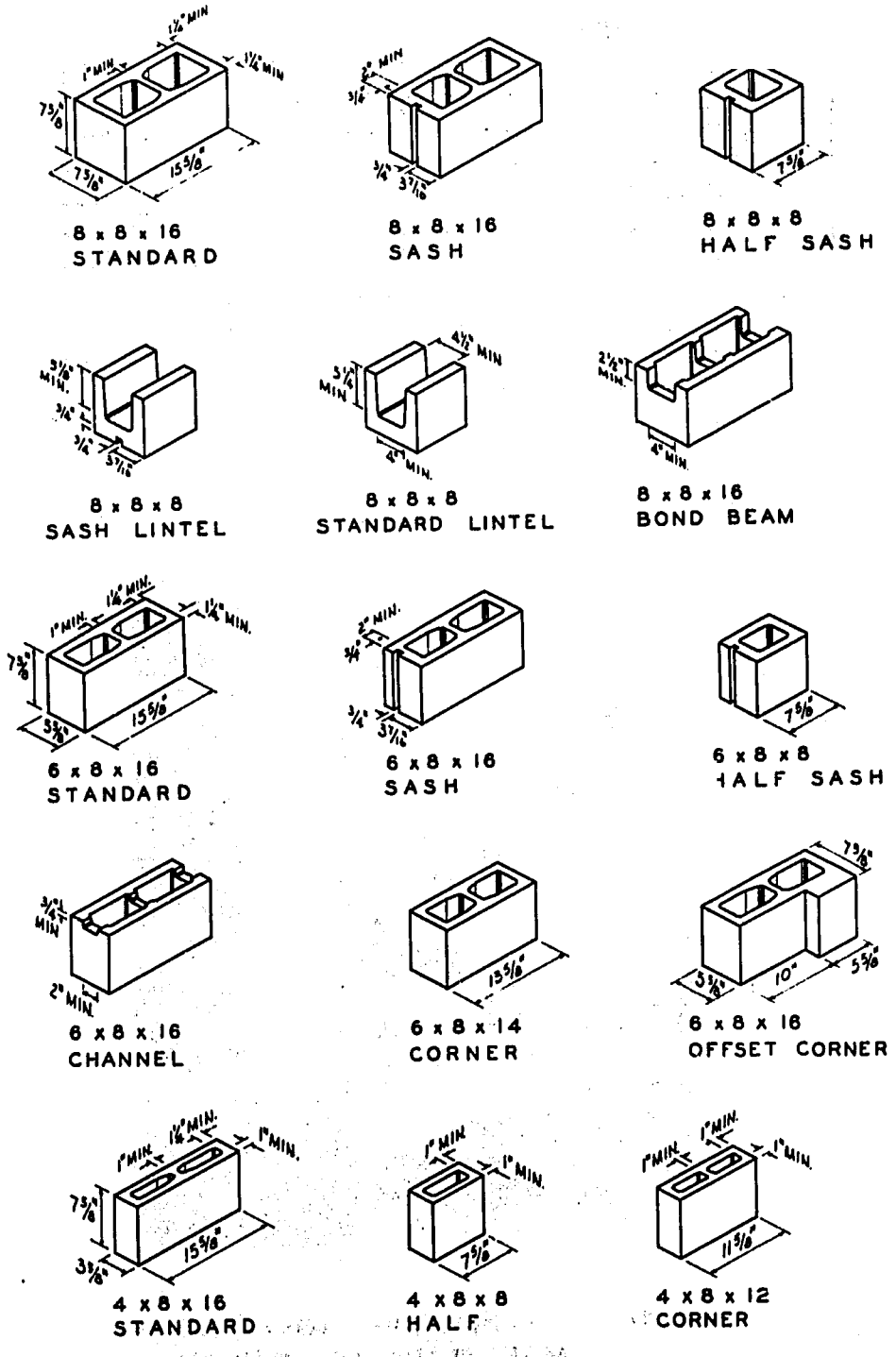

FIGURE 6 CONCRETE MASONRY UNITS.

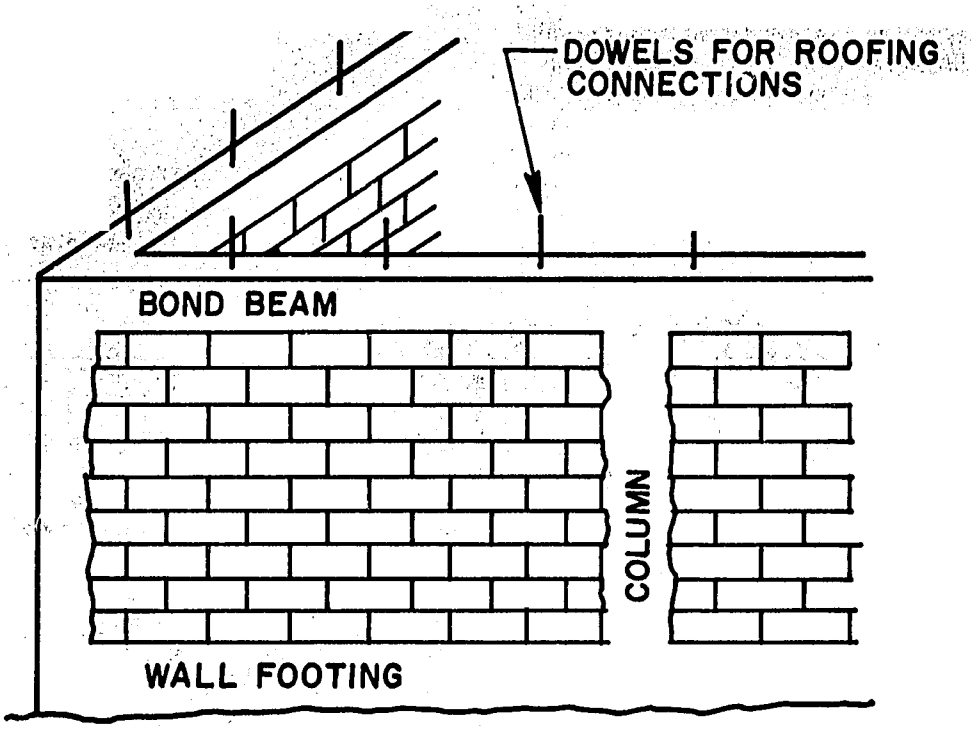

FIGURE 7 INFILL WALL MASONRY CONSTRUCTION.

FIGURE 8 COLLAPSE OF ONE-STORY BUILDING CAUSED BY THE NOVEMBER 1974 TYPHOON IN THE PHILIPPINES.

FIGURE 9 FAILURE OF METAL ANCHOR PLATE IN BUILDING DESTROYED BY NOVEMBER 1974 TYPHOON IN THE PHILIPPINES.

FIGURE 10 ROOF FAILURE IN BUILDING CAUSED BY NOVEMBER 1974 TYPHOON IN THE PHILIPPINES.

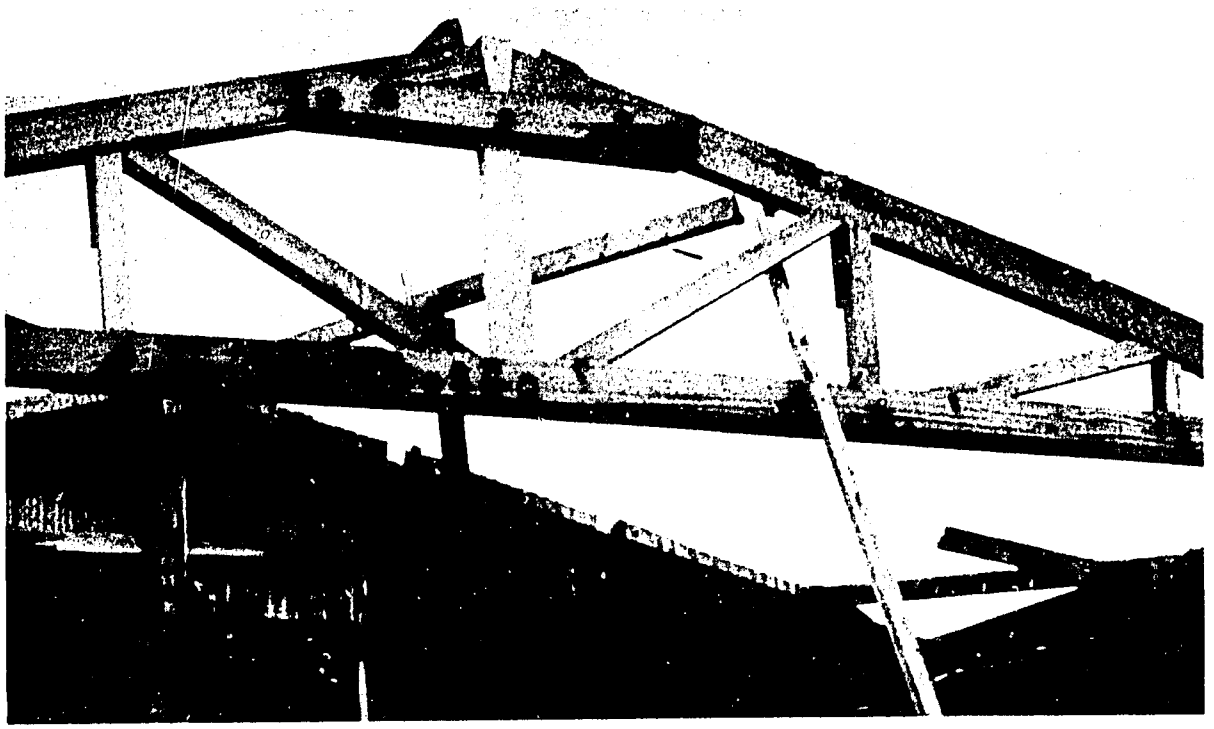

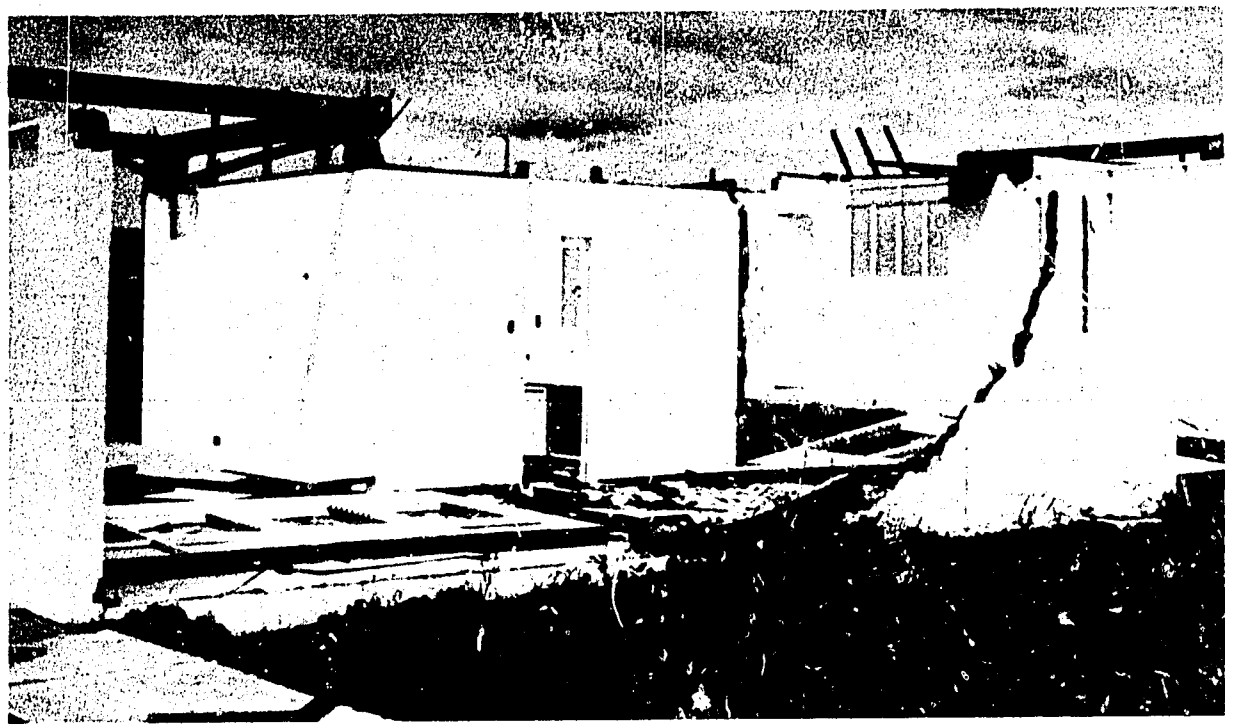

FIGURE 11 SINGLE FAMILY HOUSES DAMAGED OR DESTROYED BY TYPHOON IN NOVEMBER 1970, IN CENTRAL LUZON, THE PHILIPPINES.

FIGURE 12 SINGLE FAMILY HOUSE SHOWING COLLAPSE OF ROOF AND EXTERIOR WALL DURING THE PHILLIPINES TYPHOON IN NOVEMBER 1970.

FIGURE 13 INTERIOR DAMAGE OF SINGLE FAMILY HOUSE CAUSED BY THE NOVEMBER 1970 TYPHOON IN THE PHILIPPINES.

FIGURE 14 RESIDENTIAL BUILDING IN DARWIN, AUSTRALIA, DESTROYED BY THE DECEMBER 1974 CYCLONE.

FIGURE 15 BUILDING OF CAVITY WALL CONSTRUCTION IN DARWIN, AUSTRALIA, PARTIALLY DESTROYED BY THE DECEMBER 1974 CYCLONE.

FIGURE 16 BUILDING IN DARWIN, AUSTRALIA SHOWING PARTIAL COLLAPSE OF ROOF AND MASONRY INFILL WALLS CAUSED BY THE DECEMBER 1974 CYCLONE.

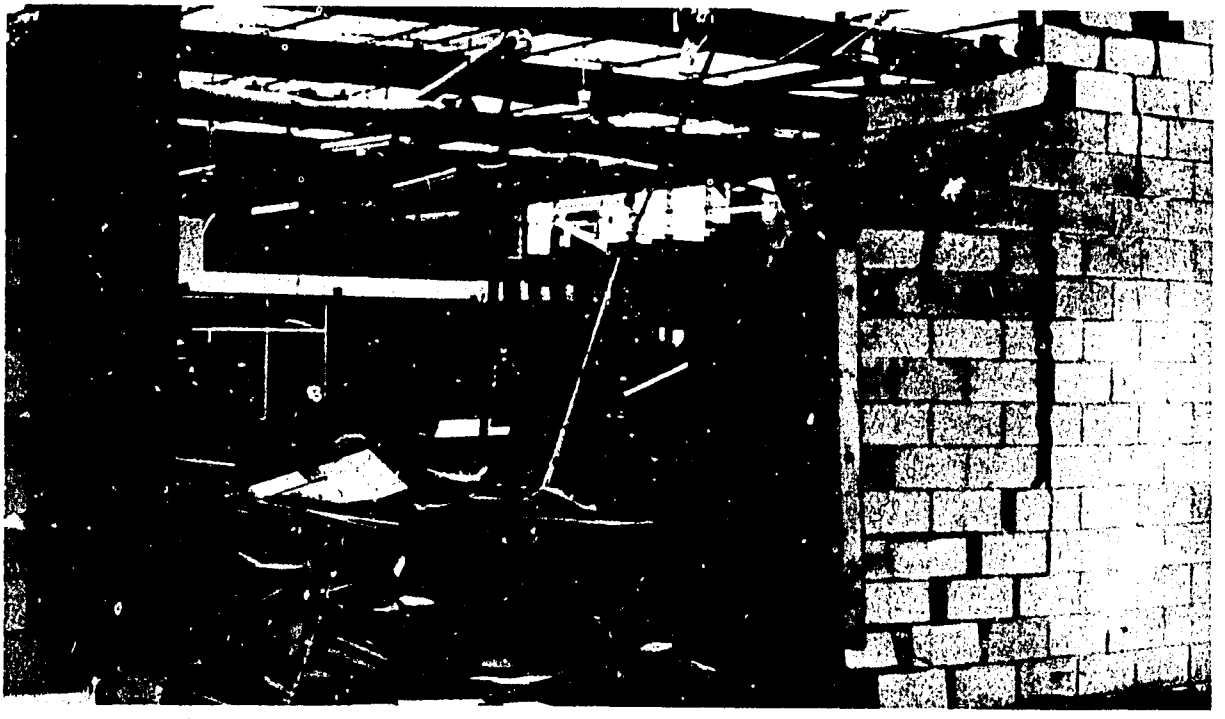

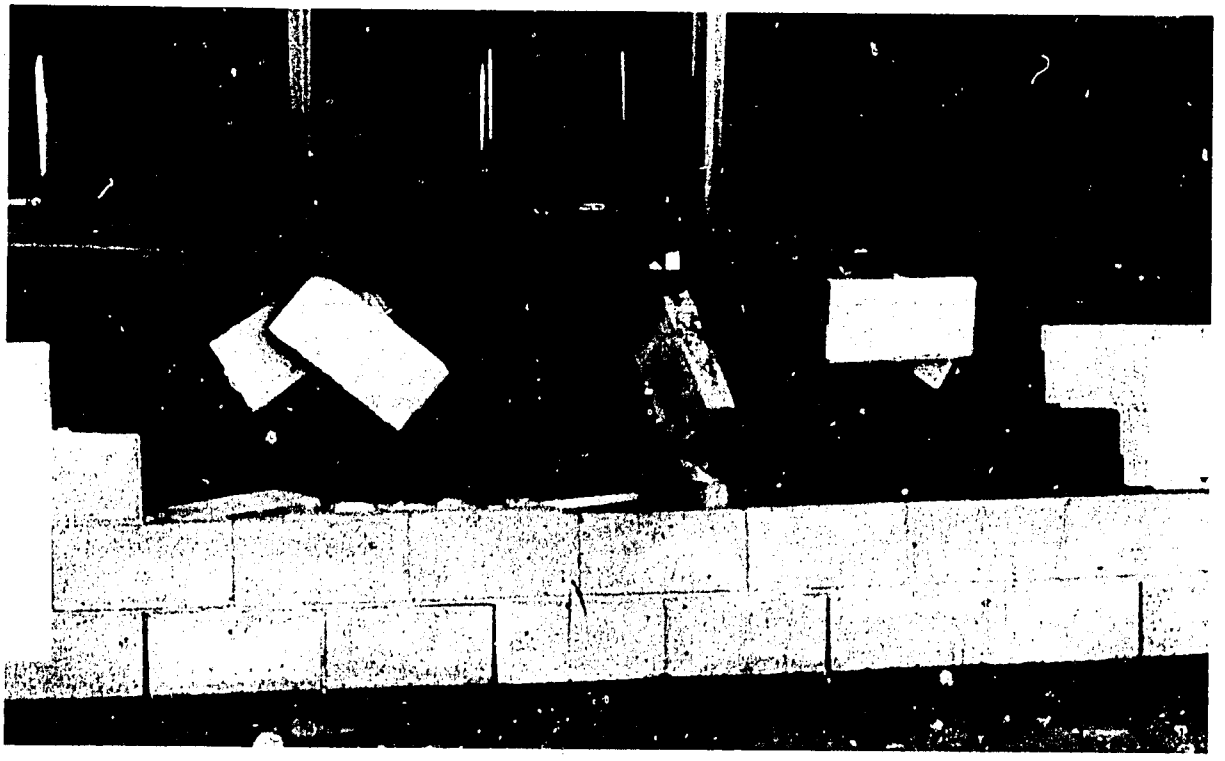

FIGURE 17 FAILURE OF CONCRETE BLOCK MASONRY WALL IN BUILDING SUBJECTED TO THE DECEMBER 1974 CYCLONE IN DARWIN, AUSTRALIA.

FIGURE 18 SINGLE FAMILY MASONRY HOUSE UNDER CONSTRUCTION IN CENTRAL LUZON, THE PHILIPPINES.

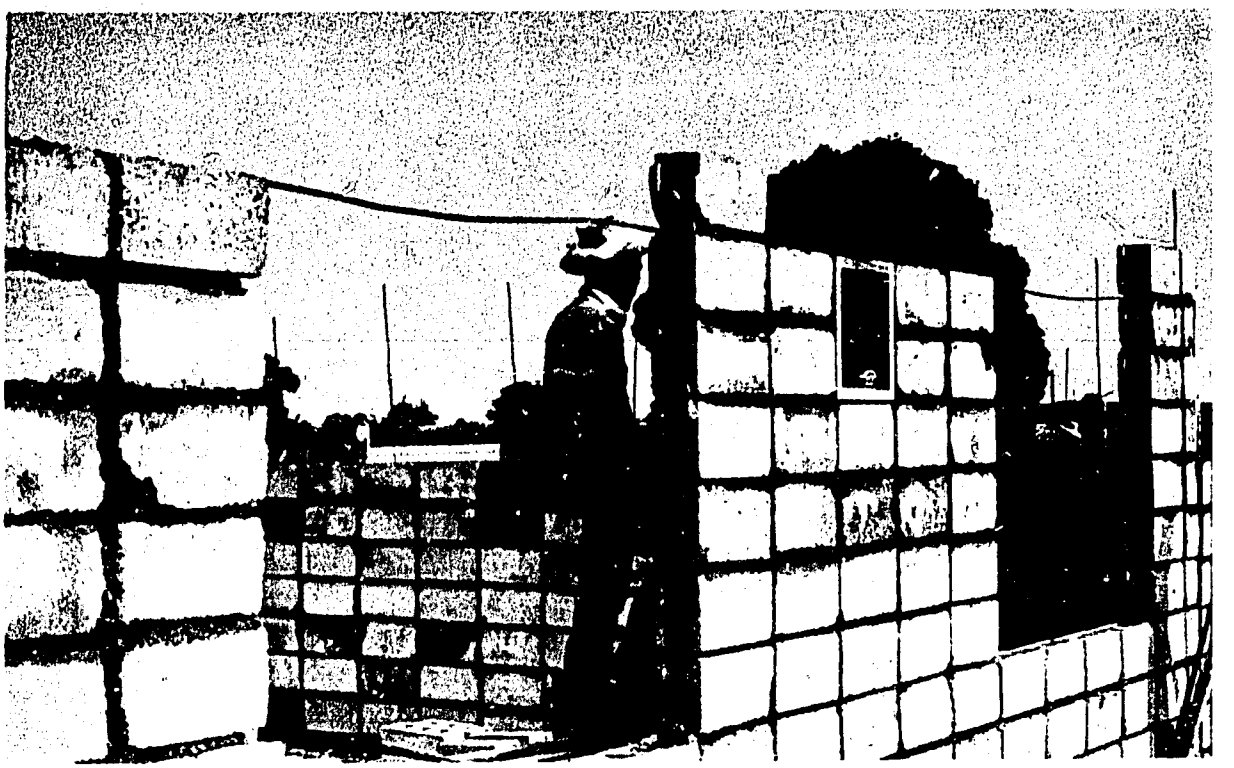

FIGURE 19 STACKED BOND CONCRETE MASONRY WALL CONSTRUCTION FOR SINGLE FAMILY OCCUPANCY IN CENTRAL LUZON, THE PHILIPPINES.

FIGURE 20 SINGLE FAMILY HOUSING DEVELOPMENT IN CENTRAL LUZON, THE PHILIPPINES.

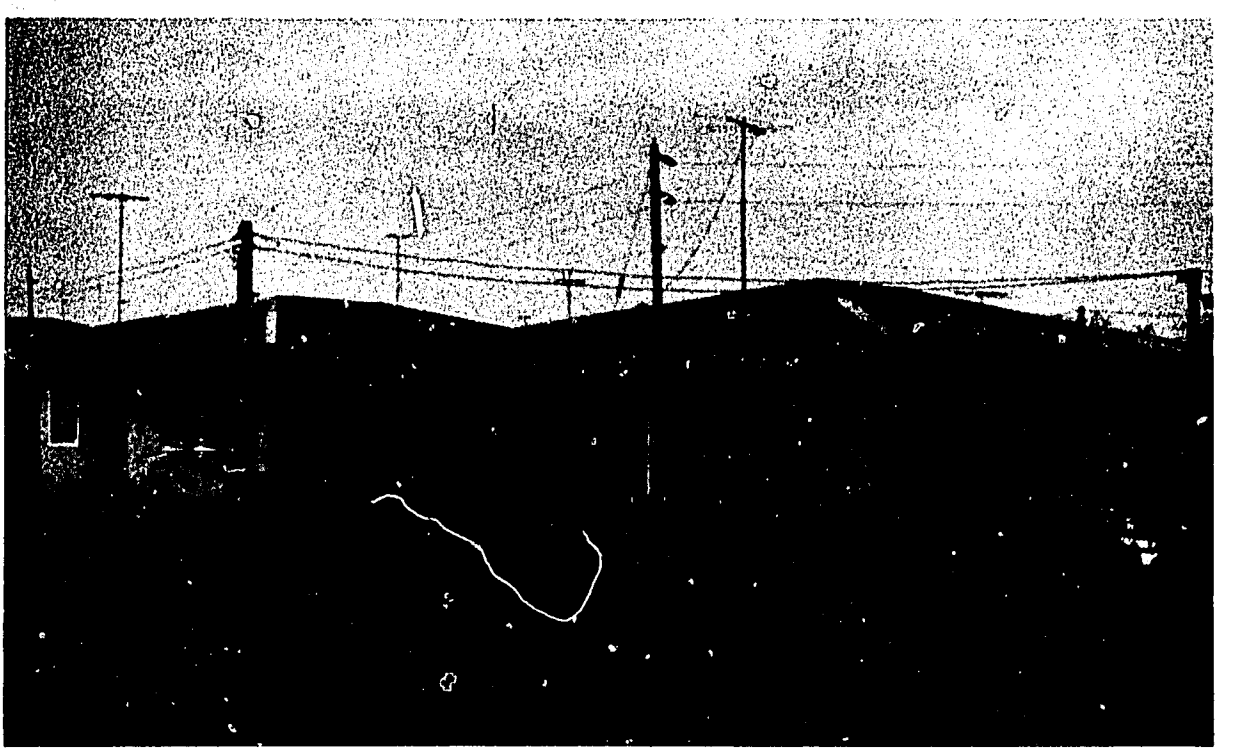

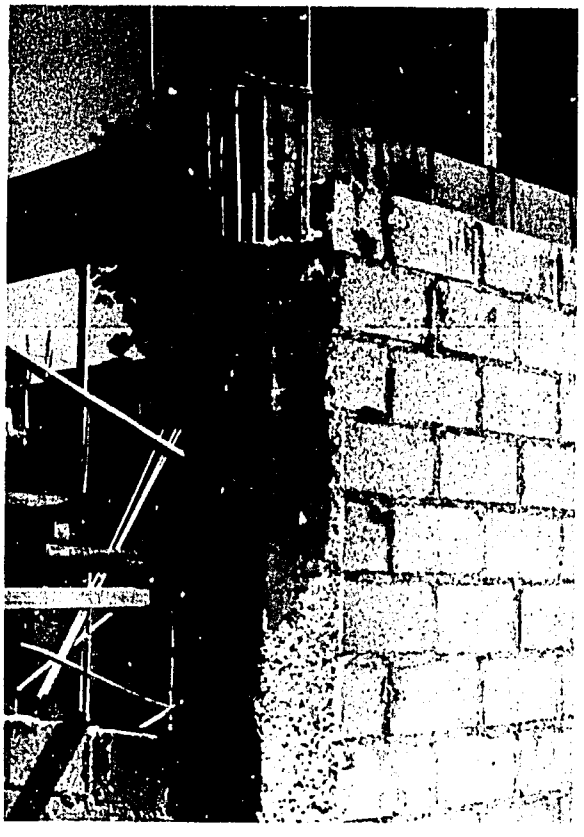

FIGURE 21 CONCRETE COLUMNS WITH CONCRETE MASONRY INFILL WALLS BEING CONSTRUCTED FOR SINGLE FAMILY DWELLING OCCUPANCY IN CENTRAL LUZON, THE PHILIPPINES.

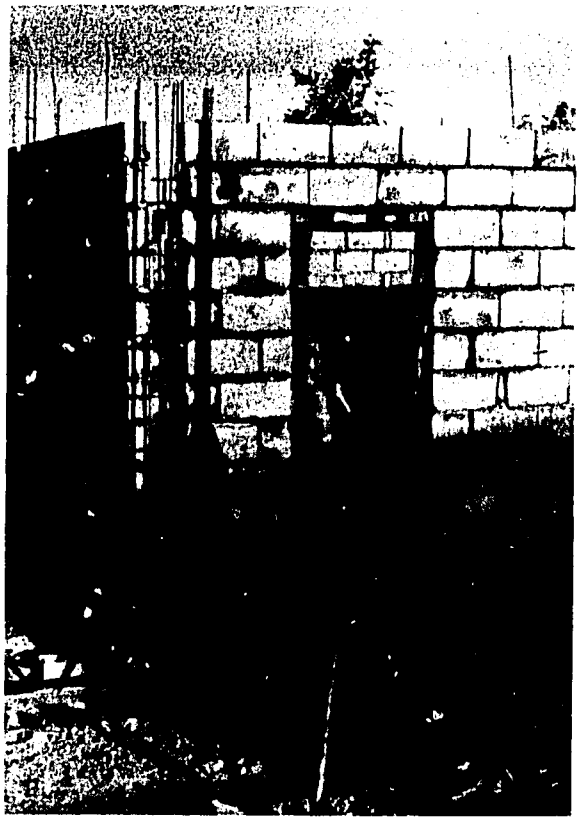

FIGURE 22 CONSTRUCTION OF SINGLE FAMILY HOUSING UNIT IN CENTRAL LUZON THE PHILIPPINES, SHOWING CONCRETE MASONRY FILLER WALLS AND REINFORCEMENT OF CORNER COLUMN.

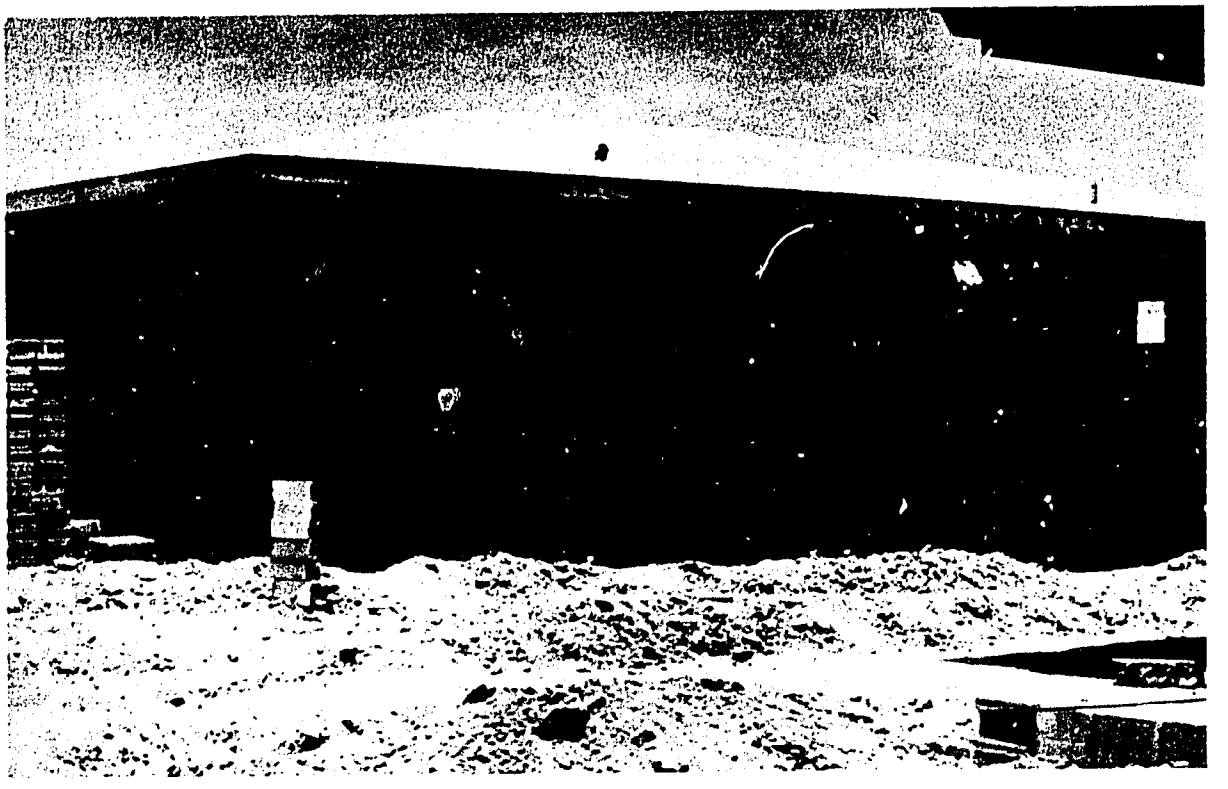

FIGURE 23 REINFORCED CONCRETE MASONRY DWELLING UNIT IN CENTRAL LUZON, THE PHILIPPINES.

FIGURE 24 REINFORCED CONCRETE MASONRY WALLS UNDER CONSTRUCTION FOR HOUSING IN CENTRAL LUZON, THE PHILIPPINES.

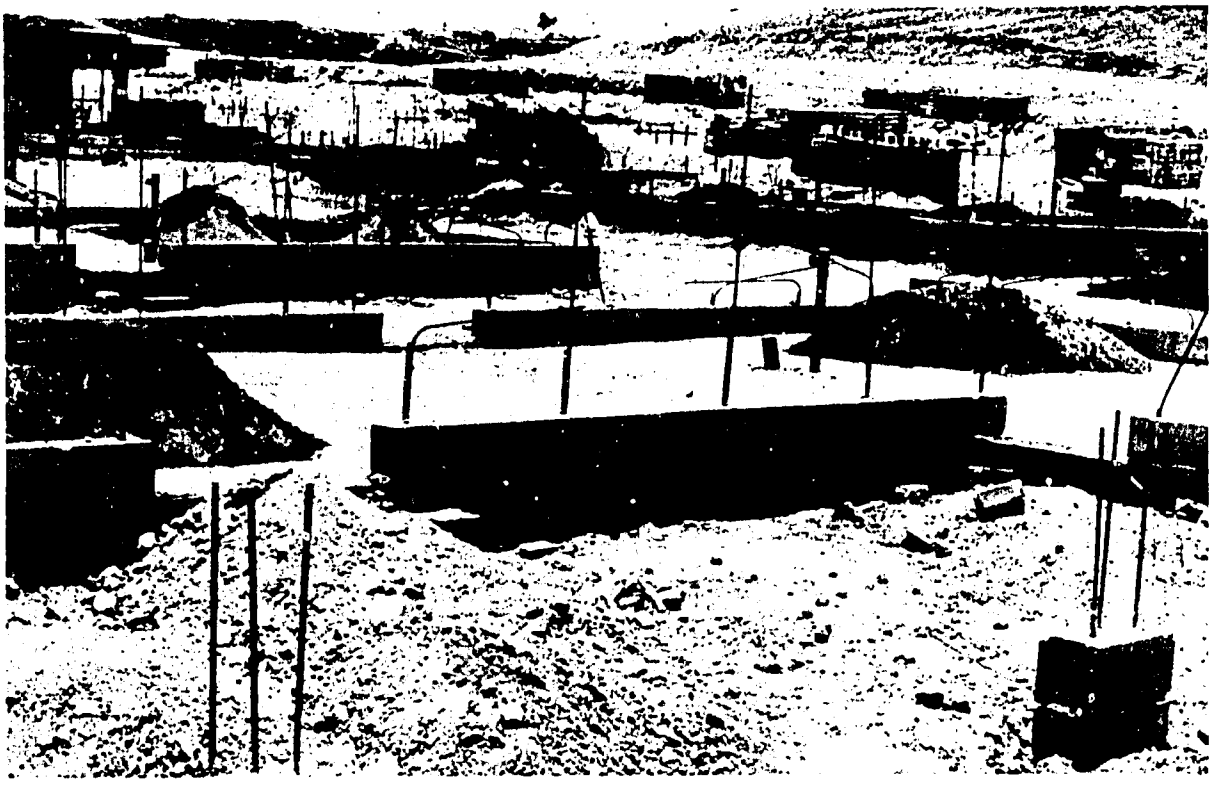

FIGURE 25 CONCRETE MASONRY BEARING WALL CONSTRUCTION WITH TRUSS TYPE ROOF FOR HOUSING IN CENTRAL LUZON, THE PHILIPPINES.

FIGURE 26 SINGLE FAMILY HOUSING UNDER CONSTRUCTION IN CENTRAL LUZON, THE PHILIPPINES, SHOWING CONCRETE BOND BEAM DETAIL OVER OPENINGS.

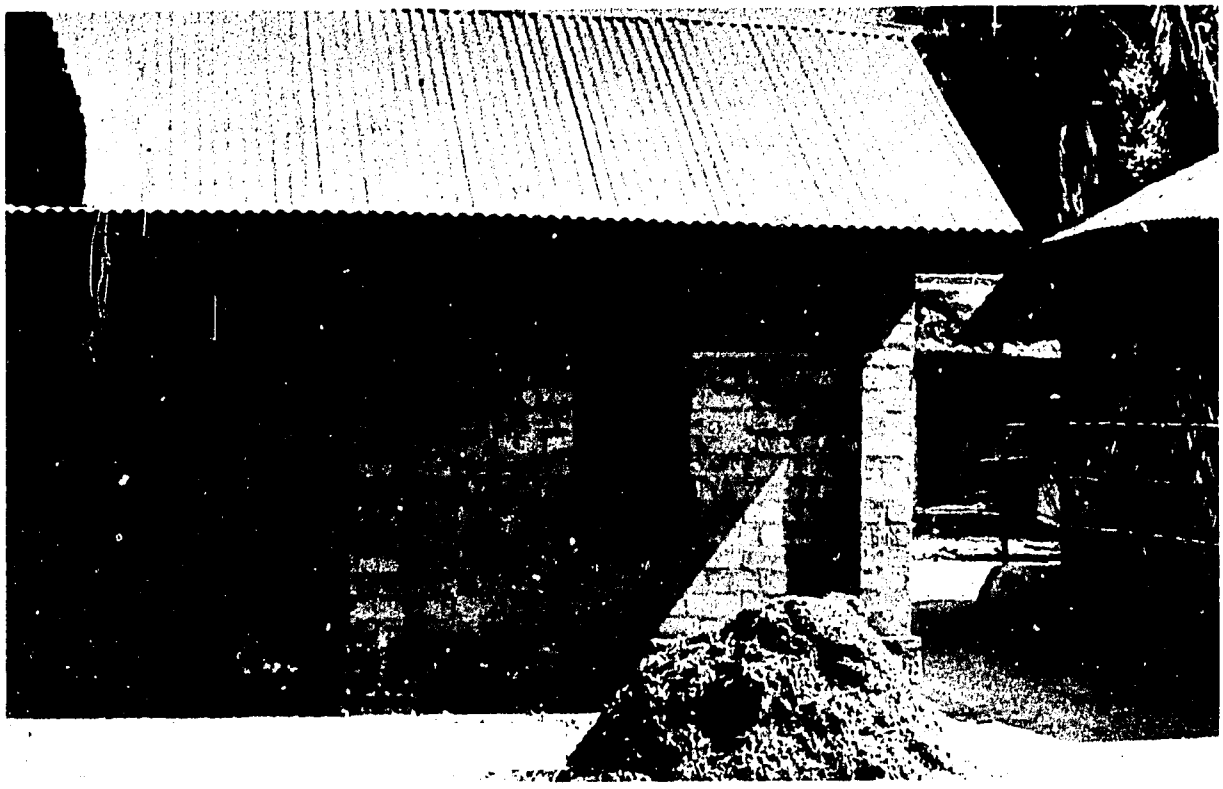

FIGURE 27 CARE SPONSORED HOUSING PROJECT NEAR DACCA, BANGALADESH SHOWING CINVA-RAM WALL CONSTRUCTION WITH CORRUGATED METAL ROOFING.

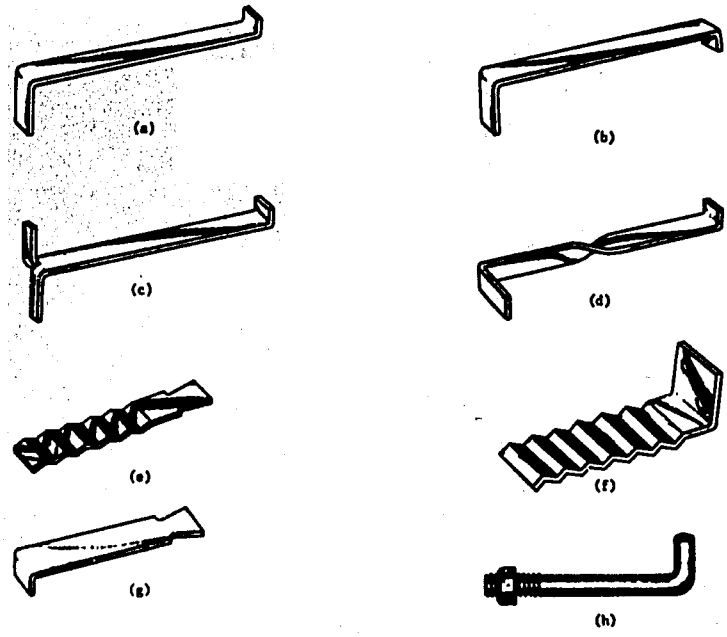

FIGURE 28 VARIOUS METAL ANCHORS: (a), (b) TIEBARS WITH END HOOKS; (c) TIEBAR WITH HOOK AND SPLIT HOOK; (d) TIE BAR WITH 90° TWIST; (e) CORRUGATED DOVETAIL TIE; (f) CORRUGATED TIE; (g) DOVETAIL TIE WITH HOOK;(h) ANCHOR BOLT.

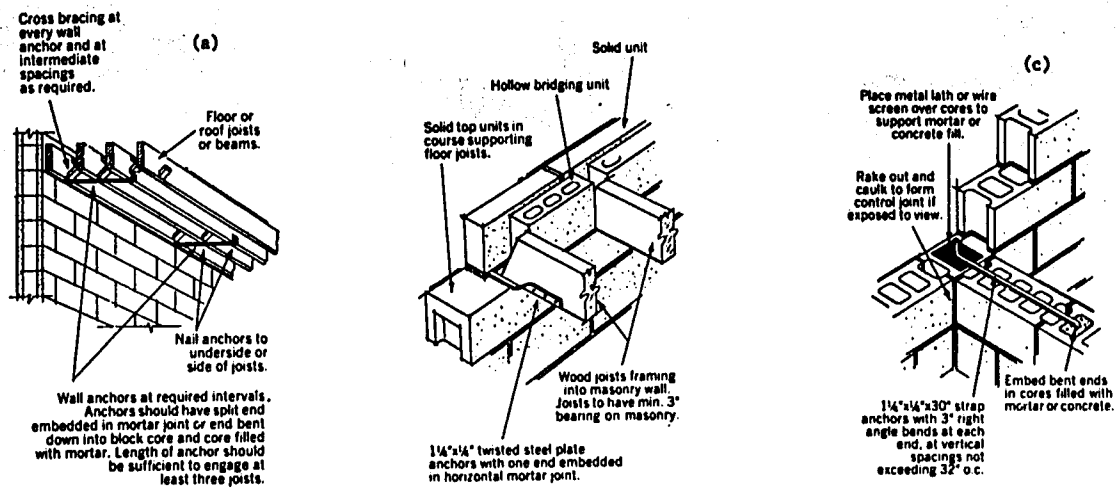

FIGURE 29 APPLICATION OF METAL ANCHORS IN MASONRY CONSTRUCTION: (a) TIEBAR ANCHOR TO WOOD JOISTS; (b) TWISTED ANCHOR CONNECTING WOOD JOIST TO CONCRETE MASONRY BEARING WALL; (c) TIEBAR ANCHOR CONNECTING CONCRETE MASONRY INTERSECTING WALLS.

Length Conversion

1 in = 25.4 mm
1 in = 0.0254 m

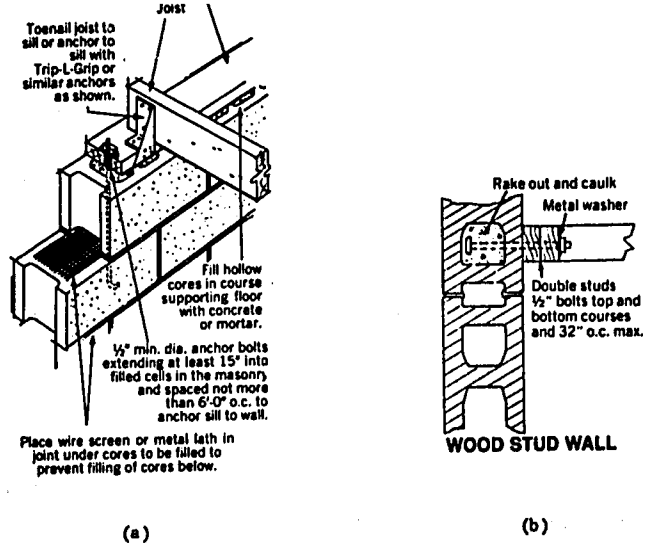

FIGURE 30 APPLICATION OF ANCHOR BOLT FOR MASONRY CONNECTION: (a) CONNECTION OF SILL PLATE TO CONCRETE MASONRY BEARING WALL; (b) CONNECTION OF CONCRETE MASONRY WALL TO WOOD STUD WALL.

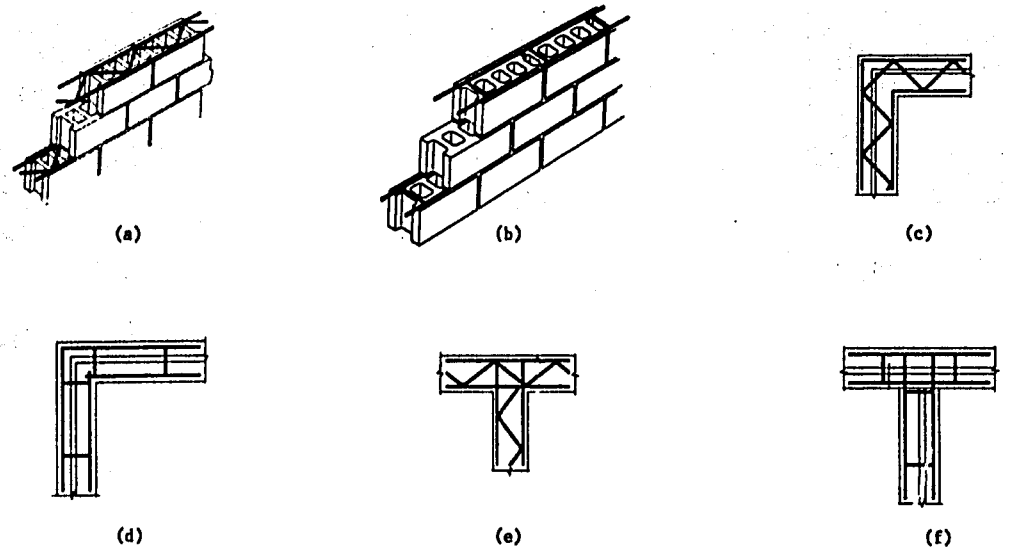

FIGURE 31 JOINT REINFORCEMENT IN MASONRY WALLS: (a) TRUSS; (b) LADDER; (c) AND (d) PREFABRICATED CORNER SECTION; (e) AND (f) PREFABRICATED TEE SECTION.

Length Conversion

1 in = 25.4 mm
1 in = 0.0254 m

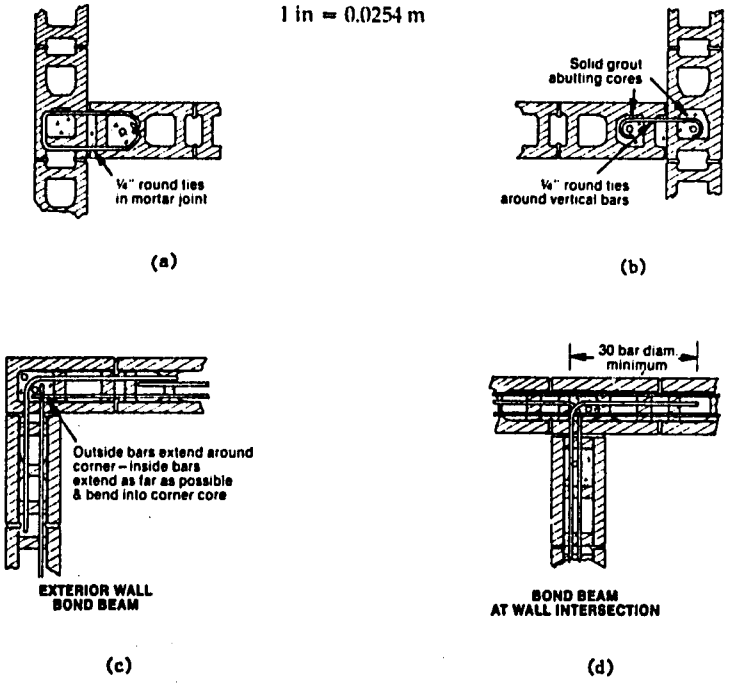

FIGURE 32 HORIZONTAL REINFORCEMENT BETWEEN INTERSECTING MASONRY WALLS: (a) AND (b) WITHOUT BOND BEAMS; (c) AND (d) WITH BOND BEAM

Facing Page: Roof structural system in a new United States - Republic of Philippines School Building.

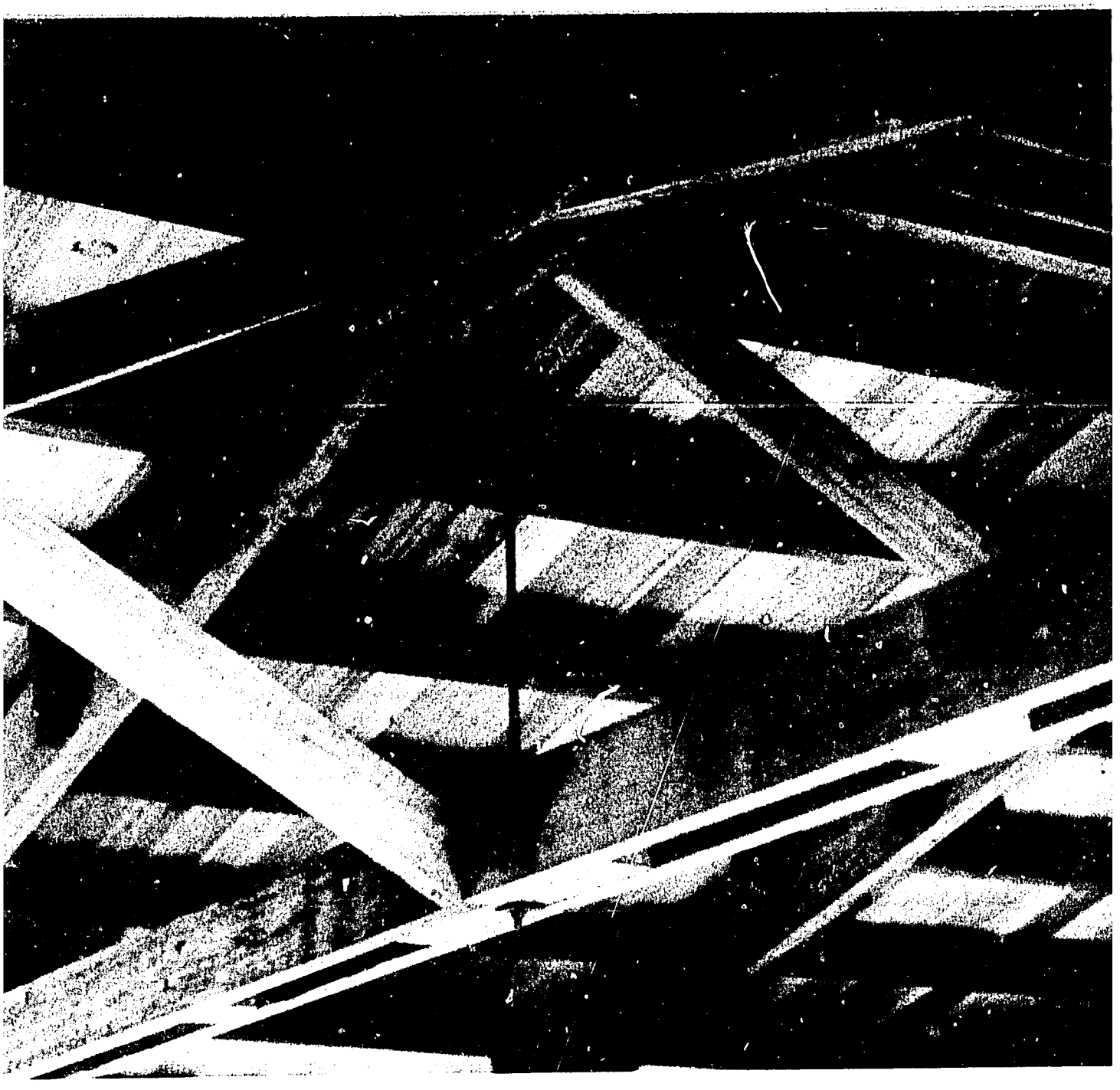

3. FASTENERS FOR TIMBER CONSTRUCTION IN HIGH WIND AREAS

by
G.E. Sherwood and T.L. Wilkinson [4]

3.1 INTRODUCTION

Houses and other low-rise buildings in many tropical areas such as Jamaica, Bangladesh, and the Philippines are subject to extreme winds several times each year. Failures that occur in buildings or building elements of wood construction usually occur in the fasteners rather than in the structural members. Buildings that are adequately braced to resist racking forces, and have each element tied together from foundation to roofing, can resist high winds without structural failures. This section describes and provides

[4] Messrs G.E. Sherwood and T.L. Wilkinson are engineers with the Forest Products Laboratory, Forest Service, U.S. Department of Agriculture, maintained at Madison, Wisconsin, in cooperation with the University of Wisconsin.

sources for commercially available timber connectors, existing timber-related building practice in the Philippines, and identification of good and poor timber connector practice. It also presents recommended practice, including connectors that can be fabricated by the indigenous people.

3.2 AVAILABLE TIMBER FASTENERS

3.2.1 Nails, Screws, Bolts, and Lag Screws

These common mechanical fasteners for wood come in many varieties. A variety of nails is shown in figure 33. Some may be used for several purposes while others are intended for special purposes.

In general, nails resist or transmit smaller loads than screws, and screws resist or transmit smaller loads than bolts or lag screws. However, because of their smaller size, more nails can usually be used in a joint. A good source of information on the design of joints with such fasteners is the *National Design Specificati for Stress-Grade Lumber and Its Fastenings* by the National Forest Products Association [47].

There are a large number of manufacturers of such fasteners. The best source for obtaining names of manufacturers in the *Thomas Register of American Manufacturers and Catalog File* [26].

These manufacturers can provide catalogs which describe the fasteners they manufacture along with the intended purpose for each.

3.2.2 Timber Connectors

Timber connectors generally refer to split rings, shear plates, and toothed rings (figs. 34, 35, and 36). These are intended primarily for heavy [members larger than 100 mm (4 in) thickness] construction and usually result in bulky joints. Special tools and skills are needed for properly constructed timber connector joints.

Split rings and toothed rings are used for wood-to-wood joints, and shear plates are used for wood-to-steel joints, and sometimes for wood-to-wood joints. Proper joint design procedures and loads can be found in ref. [47].

Manufacturers of timber connectors as listed in *Thomas Register* are as follows:

(1) Simpson Company
1472 Doolittle Drive
San Leandro, California 94577

(2) Woodmack Products, Inc.
852 Aldo Avenue
Santa Clara, California 95050

(3) Timber Engineering Company
5530 Wisconsin Avenue
Washington, D.C. 20015

(4) Kees, F.D., Manufacturing Company
21 High Street
Beatrice, Nebraska 68310

(5) Cleveland Steel Specialty Company
14442 Industrial Avenue,
South Cleveland, Ohio 43228

3.2.3 Truss Plates

These fasteners are made of galvanized sheet metal, usually 20 gage, intended primarily for use as gussets for light timber [members 50 mm (2 in) thick] trusses. the plates may be obtained in many sizes of rectangular shape. Their means of transferring load vary from the use of nails in punched holes, plugs or barbs of different shapes, to teeth of different shapes and lengths. Figure 37 shows some typical plates.

Procedures for designing with these plates are presented in Design Specifications for *Light Metal Plate Connected Wood Trusses* by the Truss Plate Institue [48]. This publication also lists 11 manufacturers which are members of the Truss Plate Institute.

Detailed description of the plates and design loads can be obtained from the manufacturers.

3.2.4 Sheet Metal Fasteners and Other Special Devices

These fasteners include such items as joist and beam hangers, framing anchors, rafter anchors, post anchors, etc. (fig. 38), which are made of galvanized sheet metal and which require fastening to the framing with nails or screws.

A good reference for descriptions and specifications of these fasteners is *Products in Action* by the Timber Engineering Company [49].

Some of the manufacturers of truss plates also make certain types of special fasteners for use in framing applications.

3.3 PHILIPPINE TIMBER-RELATED PRACTICES

Timber-related building practices in the Philippines can be divided into three general categories:

(1) Pole-type construction in which poles are set into the ground to serve as foundation and extend to the roof (fig. 39).

(2) Concrete slab, perimeter, or pier foundation of concrete or masonry with wall and roof framing of wood (fig. 40).
(3) Concrete slab or perimeter foundation supporting masonry or cast concrete walls, and a wood-frame roof (fig. 41).

3.3.1 Pole Type

This type of construction is well suited to high wind areas because the major structural member, the pole, serves as the connecting link between all other structural members. If the poles are set 1.2 m (4 ft) or more into the ground, they serve as anchors for the building. For long life, all poles must be pressure treated for resistance to decay and insect attack.

Roof framing members are either round or sawn timbers. In remote areas, they may be tied together with strips of bamboo (fig. 42). This type of connector appears to provide good resistance to wind forces. Nailing is also effective if nails are loaded laterally rather than in direct withdrawal.

Covering materials for this type of construction are often thatch roofs and walls of thatch or bamboo. There appears to be no way to assure anchorage of thatch during high winds (fig. 33). Wood siding nailed to framing members offers good resistance to wind, but nails should be corrosion resistant.

3.3.2 Wood-Framed Wall and Roof

Wood-framed walls often have a single covering material. It may be applied to the exterior of the building or set between framing members. Anchor bolts are used to tie the wall to the foundation. Where the foundation is concrete block, the anchor bolt should extend through blocks into the footing. If the house is anchored only to the top concrete block, this block may be pulled from the foundation and moved with the house.

Covering material applied on the outside of the framing (fig. 44) protects the wall framing and connectors from rain. Walls with the covering set into the framing have a greater potential for trapping water, and thus promoting decay. Anchor bolts on the outside of the wall are particularly susceptible to trapping water (fig. 45). They can easily be placed on the inside for protection. The type of sill plate shown in figure 45 also traps water. The sill plate should at least be sloped to the outside so water will drain from it, and the joint with panel materials should be caulked.

Roof framing is either nailed to the top of the wall or secured with sheet metal connectors. Good nailing should hold down the roof framing, but sheet metal connectors provide a stronger joint and have less chance of being improperly nailed.

3.3.3 Masonry Wall

One method of tying roof framing to a masonry wall is to cast reinforced concrete columns at all corners and at intermediate locations on long walls. Reinforcement is tied to the foundation and extends above the columns so that it can be attached to a wood beam which extends completely around the perimeter of the house on top of the masonry wall. Trusses are sometimes anchored to this beam by metal straps nailed to both members. The metal strap has a 90° twist at its center which weakens it and allows the nails to be pulled out when anything but a direct uplift force is exerted on the strap (fig. 46).

A sheet metal connector that can be nailed to both sides of the rafter and beam would prevent the type of failure caused by rotation in the single, heavy strap.

3.3.4 Roof Framing

Framing for the roof of any of the types of structures involves use of either trusses or a rafter-and-joist system. Trusses are fabricated with metal plate connectors or bolted joints. In some larger structures, split-ring connectors are used. Trusses generally are made from an engineered design and under controlled conditions, so they have less potential for failure than the conventional rafter-and-joist system.

Where rafters are used, some type of collar tie is important to keep the roof from dividing at the peak (fig. 47). Ceiling joists, well nailed or bolted to rafters, prevent the roof from spreading outward (fig. 48). Purlins are connected to rafters or trusses in several ways. Nailed joints are among the most vulnerable because in this application the nail is loaded in direct withdrawal. Short boards 50 by 50 mm (2 by 2 in) nailed to the purlin and the rafter (fig. 48) provide a stronger joint by loading the nails laterally.

3.3.5 Roofing

The major roofing material in the Philippines is corrugated sheet metal. One method of tying roofing to purlins is the use of sheet metal straps (fig. 49). One end of the strap is bent at a 90° angle, and the bent portion is riveted to the roofing. The strap is nailed to the side of the purlin and bent under the purlin. The attachment of the strap to only one side of the purlins results in an unsymmetrical load so the strap can be twisted off by wind forces. Two straps riveted to the roofing on both sides of the purlin and lapped under the purlin, would resist forces due to moment in the connector.

Figure 50 illustrates the effectiveness of having tiedowns symmetrically loaded. A wire was tied to a nail in the bottom of the purlin, punched through the

roofing, wrapped over the purlin, and tied back to the nail. This tie held well enough that the purlin-to-rafter connection failed before the roofing connector. However, roof leakage may be a problem.

3.3.6 Protection From Wood-Destroying Organisms

A key element of good performance of timber connectors is maintenance of the strength properties of the wood. In many cases where failures have occurred, some deterioration of the wood is evident (fig. 51). Staining is prevalent around many nails and bolts (fig. 52), which reduces decay resistance of the wood. Corrosion of nails also results in loss of cross section which loosens the nails. In such a humid environment, all connectors should be corrosion resistant.

3.3.7 Summary of Good and Poor Practices

Design, construction, and maintenance practices are summarized below:

1. Design the building to act as a unit by connecting all components together and anchoring the whole structure to the foundation. Design joints to resist torsion as well as uplift even where it means using connectors in pairs.

2. The use of engineered trusses fabricated under good quality control assures structural integrity of the roof framing. Where trusses are not used, collar beams and ceiling joists must be nailed or bolted to the rafters. Sheet metal connectors provide better quality control at joints than nails alone.

3. Pole framing offers a good way of tying components together because all major structural members are connected to the poles. In masonry construction, a reinforcing rod extending from the footing to the roof provides the required continuous tie.

4. All connectors should be corrosion resistant. Locate connectors where they are protected from rain, and avoid exposed joints which trap water.

5. Loads should not be concentrated in a small number of connectors. Connectors applied to only one side of a member can often be twisted off because they have little resistance to torsional loads.

6. Nails loaded in direct withdrawal offer less resistance than laterally loaded nails. Roof framing that is anchored only to the top course of a block wall may blow off taking the blocks with it.

7. The use of connectors that are not corrosion resistant is poor practice in a humid location. Exposure of connectors to rain provides a place for water to enter the wood and promote decay. Horizontal members exposed as exterior elements form water traps which can lead to decay.

3.4 TIMBER FASTENERS APPROPRIATE FOR CONSTRUCTION IN DEVELOPING AREAS WITH HIGH WINDS

3.4.1 Pole-Type Construction

Where poles are set in the ground to serve as the main vertical framing, major floor and roof framing securely attached to the poles assures the structural integrity of the building. Round framing members commonly used for indigenous type of construction have been successfully tied to the poles with strips of bamboo (fig. 3). Sawn timbers should be bolted to the poles using 19-mm (3/4-in) or larger bolts, depending on the load. If round poles are used with sawn timber framing, notching the pole to provide a wider bearing surface (fig. 53) may be necessary, especially where two members meet end-to-end (fig. 54).

Siding materials may be boards nailed directly to the framing. Corrosion-resistant nails are particularly important for this application. Indigenous-type construction often employs walls of bamboo or thatch. These coverings have served well in many applications, but are difficult to secure in extreme winds.

3.4.2 Light Wood-Frame Construction

The wood-frame must not only be anchored to the foundation at its base, but must also provide a continuous tie from the foundation to the roof. Anchorage of wall framing to a concrete foundation may be accomplished with hooked bolts embedded 0.2 to 0.3 m (8 to 12 in) in the concrete. A large washer should be used under the nut to spread the load on the wood framing (fig. 55). Where the foundation is concrete block, the anchor bolt should extend through the block and be anchored in the concrete footing (fig. 56). The exposed end of the anchor bolt should be protected from weather. Where a single covering material is set into framing, the bolt should be placed on the protected side of the covering material (fig. 57).

The wall must be tied together as well as anchored. Panel-type covering material nailed to the anchored sill and to the top plate provides this continuous tie. Panel material nailed to framing completely around its perimeter also provides racking resistance in the wall. Where siding does not provide such a tie, sheet metal straps can be used as connectors between plates and vertical framing (fig. 58).

Roof framing is effectively tied to walls with sheet metal brackets (fig. 59) or wood cleats (fig. 60). Where

a ceiling joist-and-rafter system is used, sheet metal straps nailed to joists and studs (fig. 61) provide a good tiedown for roof framing. In this method, the rafter must be well nailed to the ceiling joists.

3.4.3 Concrete and Masonry Construction

Cast concrete posts at corners and intermediate locations in concrete block walls provide tiedown points for roof framing. Wood plates can be tied down to hooked bolts in the cast concrete posts or walls. This is the same type of connector shown in figure 55. Roof framing can then be attached to the anchored plate by sheet-metal brackets or wood cleats as shown in figures 59 and 60.

3.4.4 Roof Framing

Trusses may be used for roof framing for any of the types of construction that have been discussed. Connectors may be metal plates for light construction or split-rings for heavy construction. Split-rings that are tapered in cross section and wedged into place have the highest load-carrying capacity.

3.4.5 Roofing

Thatch roofs are often used for indigenous construction. The thatch is tied to small poles which are laid on the roof in courses with each course overlapping the one below. Poles are secured by tying them to roof framing with bamboo strips which provide good resistance to wind loads. However, the thatch itself may blow off in extreme winds.

The predominant roofing material is corrugated, galvanized sheet metal. The usual roof system consists of purlins (sometimes referred to as roof joists) spanning between rafters or trusses, and roofing attached to these purlins. The purlins should be tied to rafters with sheet metal brackets (fig. 62) or with wood cleats (fig. 63). In either case the tiedowns should be attachable to both sides of the purlin and rafter, so they cannot be twisted off by loads that are not perpendicular to the purlins.

Corrugated roofing is best affixed by a fastener that wraps completely around the purlin. Two sheet metal straps lapped under the purlin and riveted to the corrugated roofing on each side of the purlin (fig. 64) provide a good connector system that will resist moment loads which cause failure when a strap is used on only one side.

3.5 FASTENERS FOR FABRICATION BY INDIGENOUS PEOPLE

Any of the sheet metal straps could be easily fabricated with a minimum of tools. A minimum thickness of 20-gage galvanized sheet metal should be used. A width of 32-mm (1-1/4 in) and a length of 0.5 m (20 in) would be suitable for many applications (fig. 65). It may be necessary to vary this size for specific applications.

Galvanized straps could be fabricated for roofing tiedowns. This strap should be only about 152 mm (6 in) long, bent at 90°, 25-mm (1-in) from one end, and have a 6-mm (1/4-in) hole punched in the 25 mm (1-in) section (fig. 66). These straps should be used only in pairs on opposite sides of a purlin. The ends of the straps should be bent under the purlin with the two straps lapped and nailed to the bottom as well as sides of the purlin.

A multipurpose bracket could be fabricated from 20-gage galvanized steel. A suggested size is given in figure 67; however, this could be varied for other standard sizes of wood framing. Slits cut in the sheet metal permit forming the bracket for a variety of uses.

Split-ring connectors have been fabricated by cutting 19-mm (3/4-in) wide sections from 76-mm (3-in) steel pipe, and then cutting the ring at an angle. This connector and present commercially produced split-ring connectors are shown in figure 68. For maximum strength the ring should be wedged tightly into the circular groove cut in the wood. Present commercial split-rings cut from steel pipe should have good load-carrying capacity even though its capacity would be somewhat less than the tapered ring.

Metal plate connectors for truss joints is another possiblity for fabrication by indigenous people. These are usually fabricated from 20-gage galvanized sheet metal. The sheet metal is punched in a way that produces barbs or teeth at right angles to the plate. Plates with barbs punched in the pattern shown in figure 69 generally do not maintain optimum strength after expansion and contraction of the wood with moisture changes over a long period of time. Plates with teeth that penetrate deeper than barbs are less affected by moisture cycling of the wood.

3.6 SUMMARY

Wind-resistant construction for wood-frame buildings in developing countries can be achieved by providing good connectors between all members from foundation to roofing. All connectors should be corrosion resistant and protected from rain where possible. Connectors should be designed to resist being twisted off. Where nails are used, connectors should be a type that load the nails laterally rather than in direct withdrawal.

Sheet metal straps and brackets could easily be fabricated by indigenous people in developing countries. Such connectors could be fabricated using a minimum of tools and equipment.

3.7 A CAUTION

In present tropical construction, the most frequent failure caused by high winds is the loss of roofs. It should be recognized that improved design which holds the roof securely will ultimately result in the concentration of greater loads in other parts of the building. Details of wall construction and anchorage to the foundation which have been adequate when the roof failure relieved the total load on the building may not be adequate when the roof remains intact. The building will be subjected to a large overturning moment as well as to uplift load on walls.

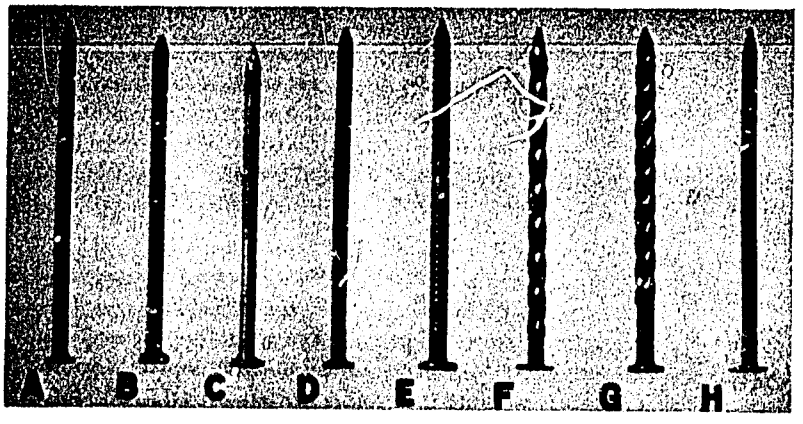

FIGURE 33 VARIOUS TYPES OF NAILS: (a) BRIGHT, SMOOTH WIRE NAIL; (b) CEMENT-COATED; (c) ZINC-COATED; (d) CHEMICALLY ETCHED; (e) ANNULARLY THREADED, (f) HELICALLY TREADED; (g) HELICALLY THREADED AND BARBED; AND (h) BARBED.

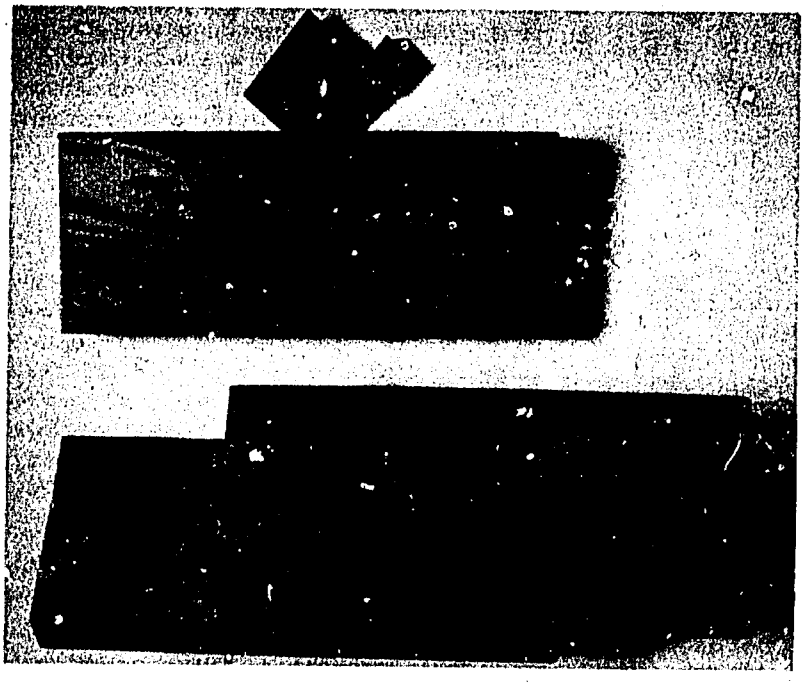

FIGURE 34 JOINT WITH SPLIT-RING CONNECTOR SHOWING CONNECTOR, PRECUT GROOVE, BOLT, WASHER, AND NUT.

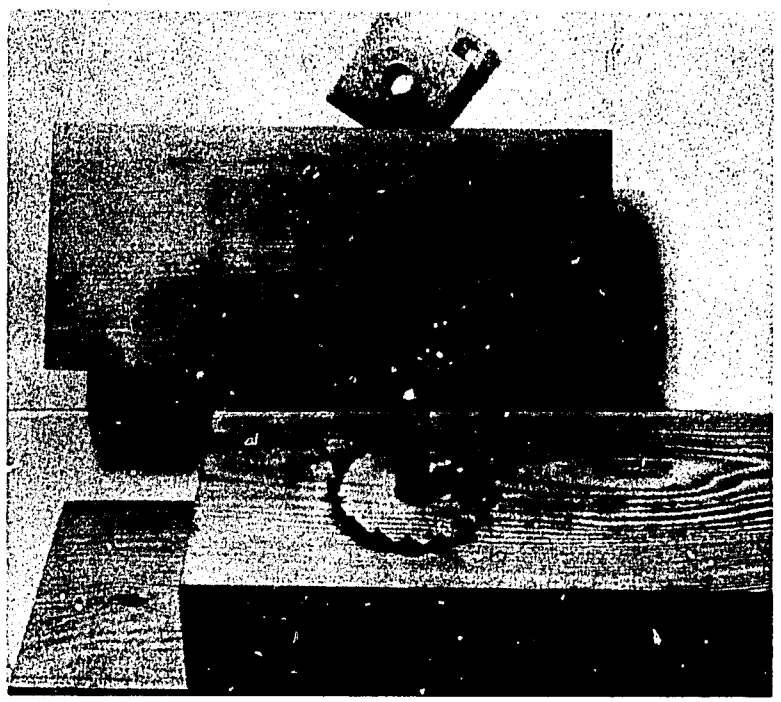

FIGURE 35 JOINT WITH TOOTHED-RING CONNECTOR.

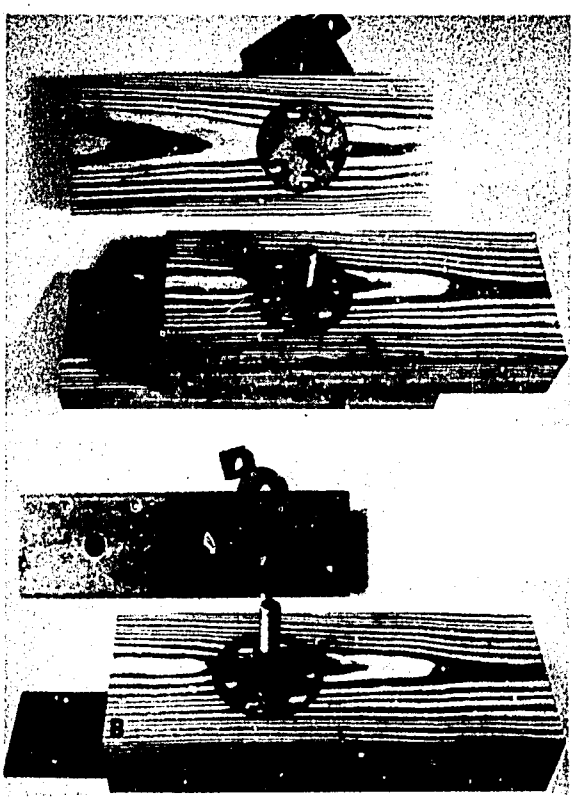

FIGURE 36 JOINTS WITH SHEAR-PLATE CONNECTORS WITH (a) WOOD SIDE PLATES; AND (b) STEEL SIDE PLATES.

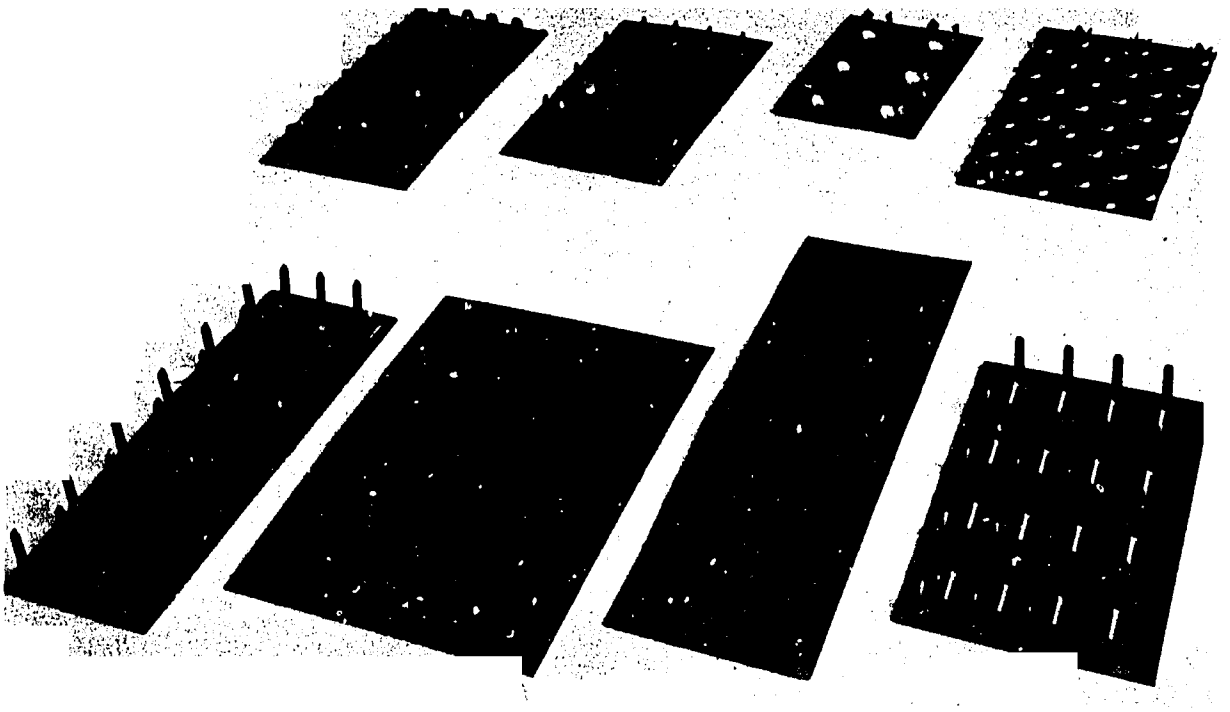

FIGURE 37 SOME TYPICAL TRUSS PLATES.

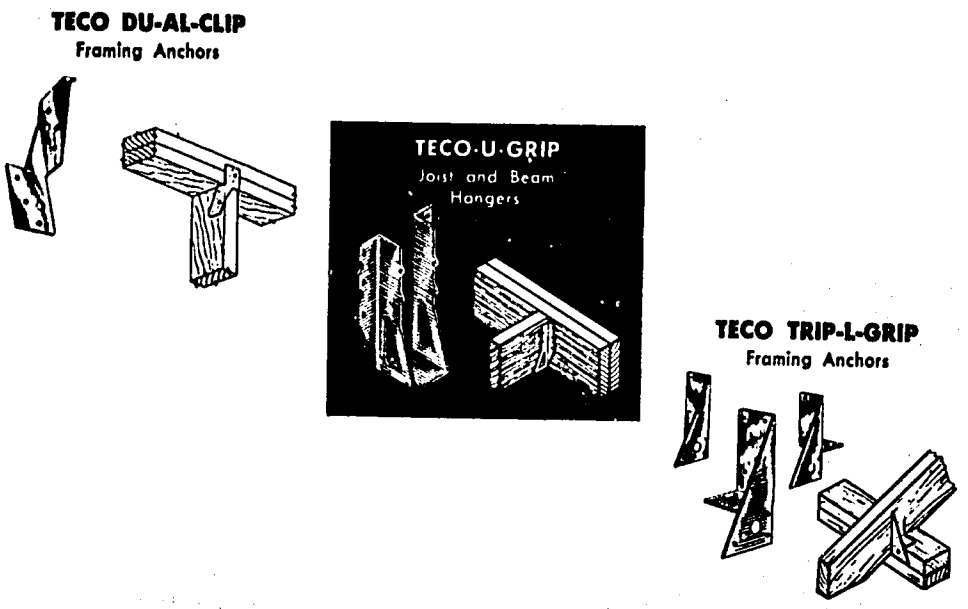

FIGURE 38 SOME EXAMPLES OF SPECIAL FASTENERS.

FIGURE 39 POLE-TYPE CONSTRUCTION.

FIGURE 40 WOOD-FRAME WALL AND ROOF.

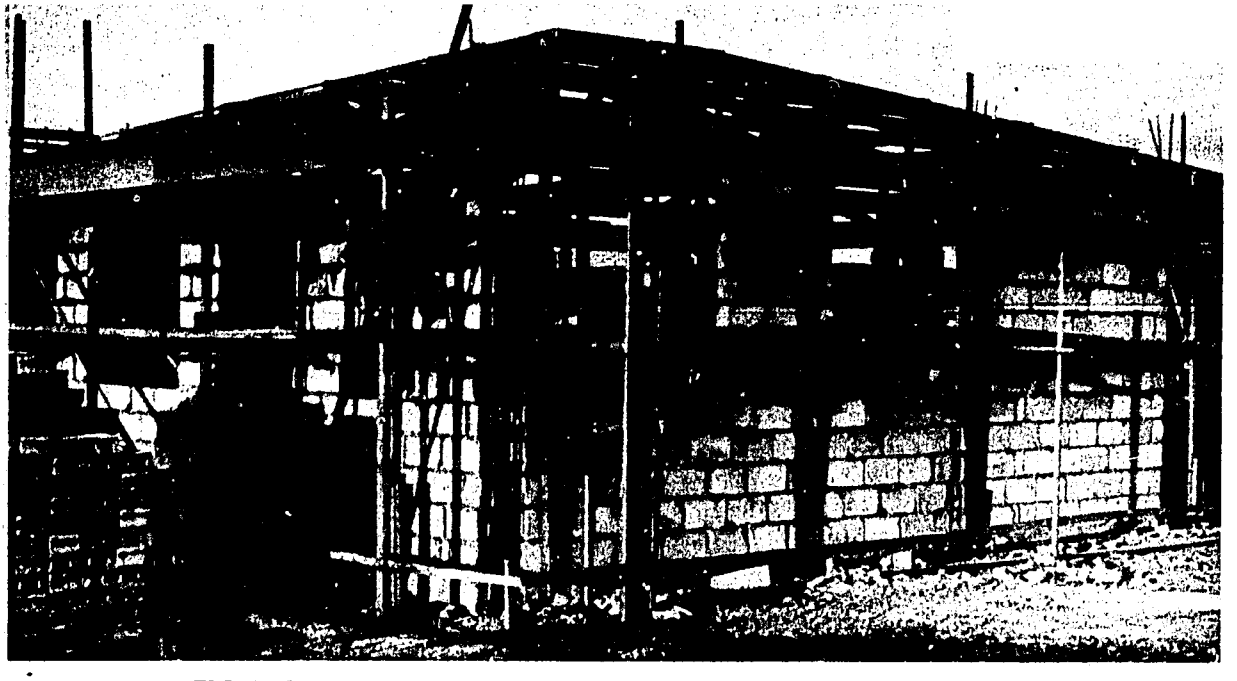

FIGURE 41 CONCRETE BLOCK WALL WITH WOOD FRAME ROOF.

FIGURE 42 ROOF FRAMING TIED DOWN WITH STRIPS OF BAMBOO.

FIGURE 43 THATCH ROOF WITH THATCH PARTIALLY BLOWN OFF.

FIGURE 44 COVERING MATERIAL ON THE OUTSIDE PROTECTS FRAMING AND CONNECTORS.

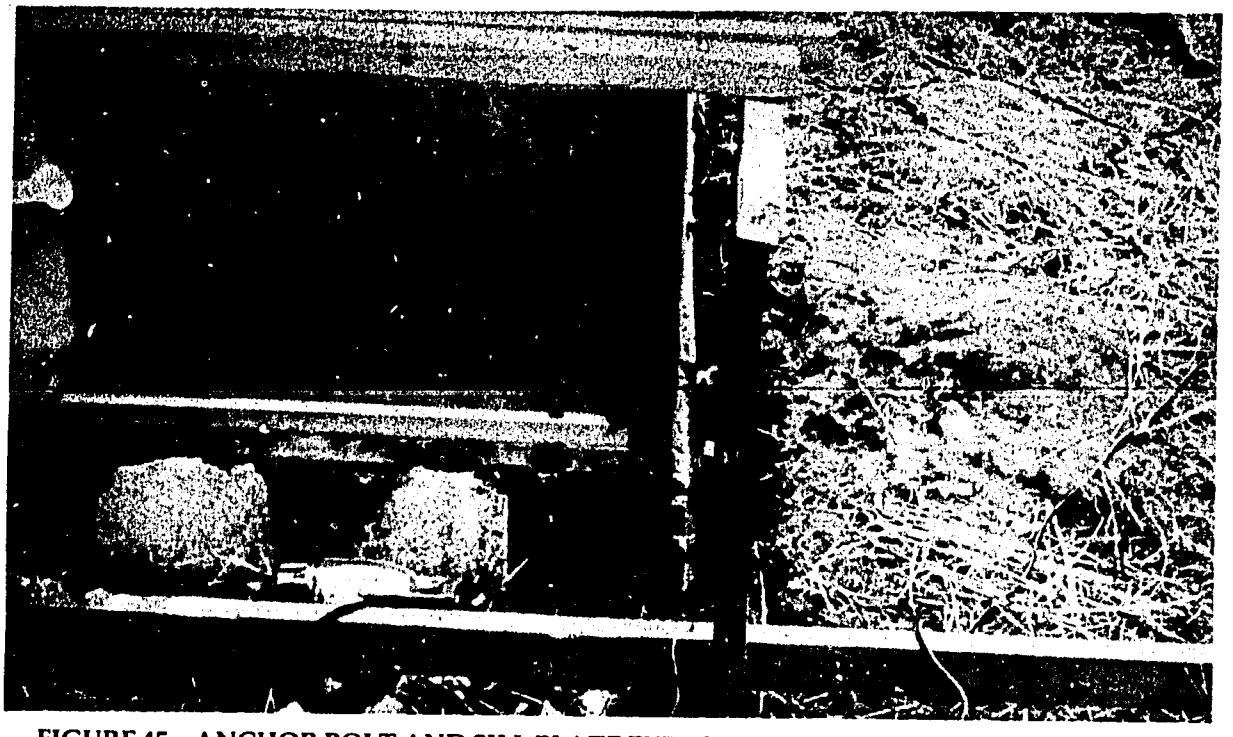

FIGURE 45 ANCHOR BOLT AND SILL PLATE EXPOSED TO WEATHER PRESENT DECAY HAZARDS.

FIGURE 46 METAL STRAP ON ONLY ONE SIDE OF FRAMING FAILED TO RESIST BENDING LOAD.

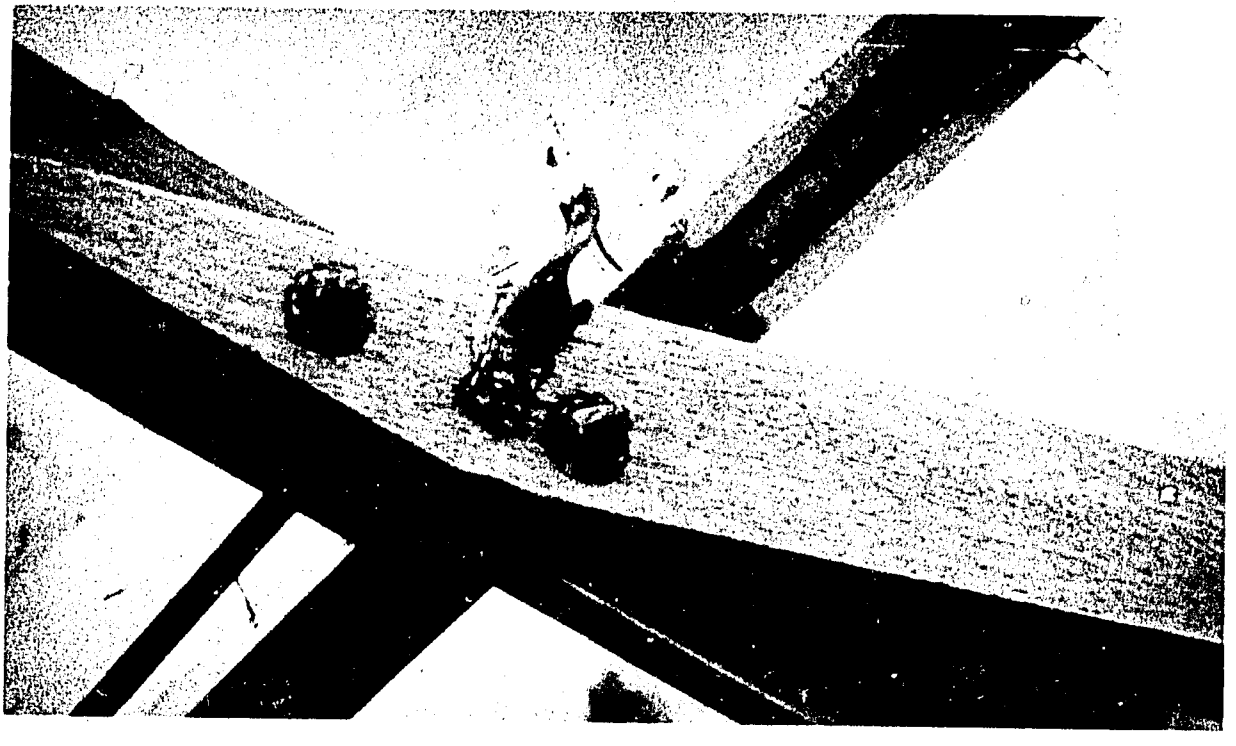

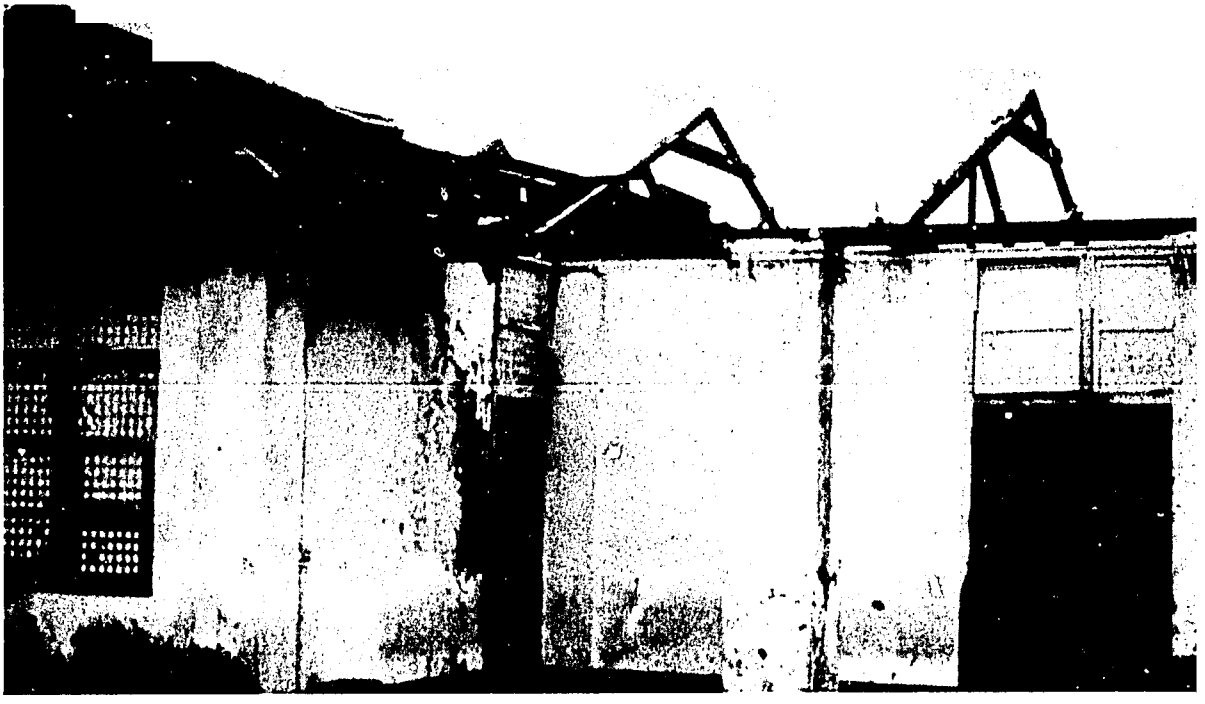

FIGURE 47 COLLAR TIES HOLD RAFTERS FROM PULLING APART AT THE PEAK.

FIGURE 48 CEILING JOIST BOLTED TO RAFTERS RESISTS OUTWARD THRUST OF RAFTER; WOOD CLEATS TIE PURLINS TO RAFTERS.

FIGURE 49 SHEET METAL STRAP NAILED TO ONE SIDE OF PURLIN AND RIVETED TO CORRUGATED ROOFING.

FIGURE 50 ALTHOUGH THE ROOF BLEW OFF OF THE STRUCTURE, THE CORRUGATED ROOFING WAS EFFECTIVELY TIED TO PURLINS BY WIRES COMPLETELY AROUND THE PURLINS.

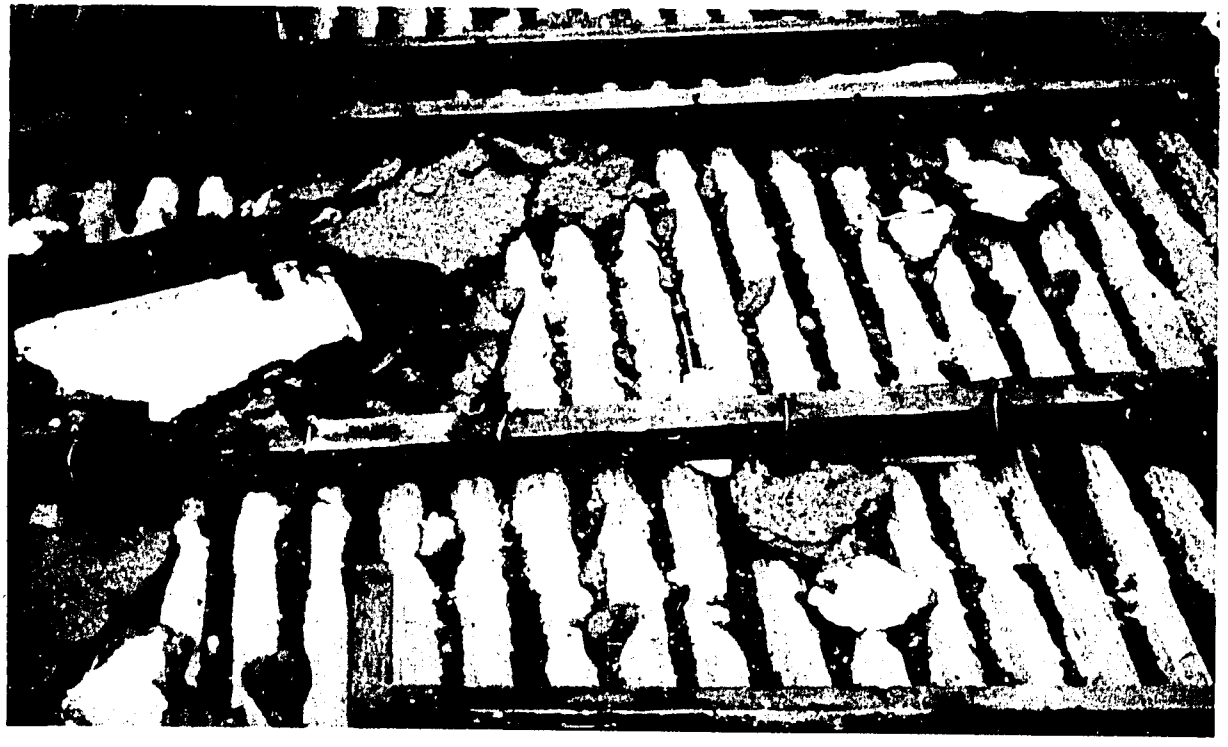

FIGURE 51 JOINT FAILURE DUE TO DECAY IN WOOD.

FIGURE 52 STAINING FROM CORROSION OF BOLTS AND NAILS.

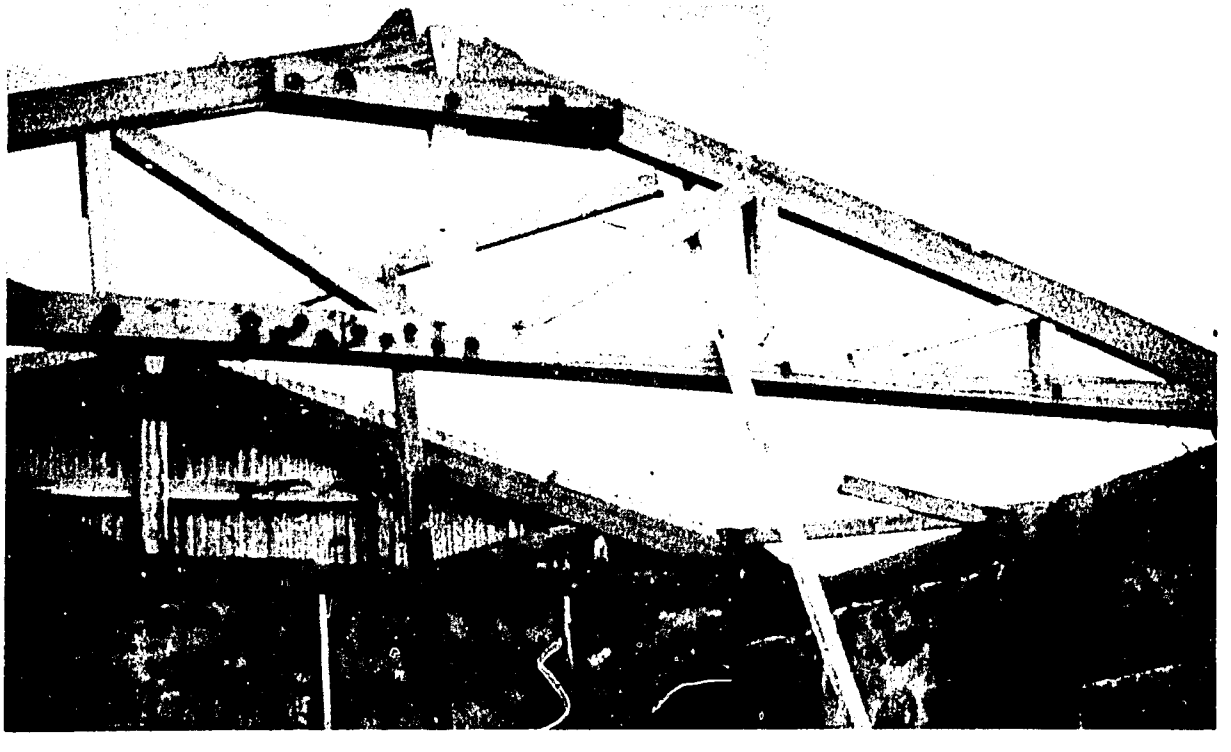

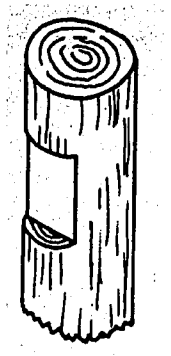

FIGURE 53 ROUND POLE NOTCHED FOR SAWN FRAMING MEMBER.

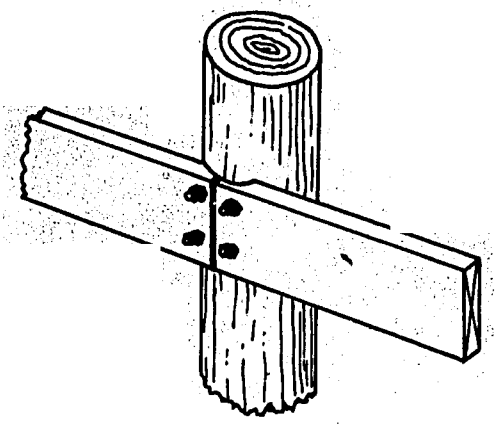

FIGURE 54 TWO FRAMING MEMBERS BUTTED END-TO-END OVER FLAT NOTCH AND BOLTED TO A POLE.

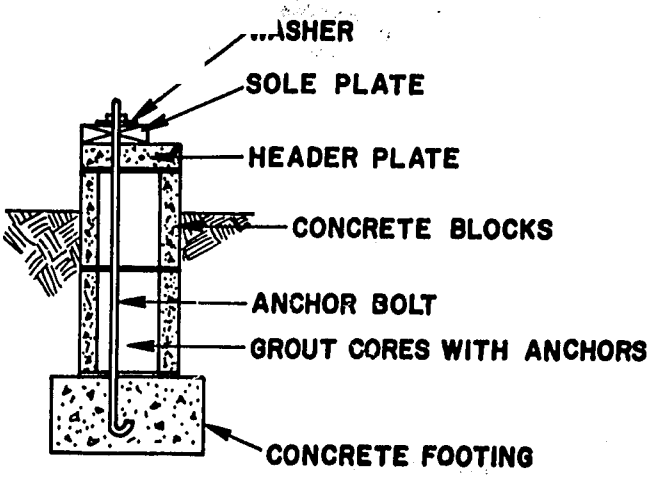

FIGURE 55 ANCHOR BOLT IN CONCRETE A MINIMUM OF 0.2 m (8 in); WASHER TO SPREAD LOAD.

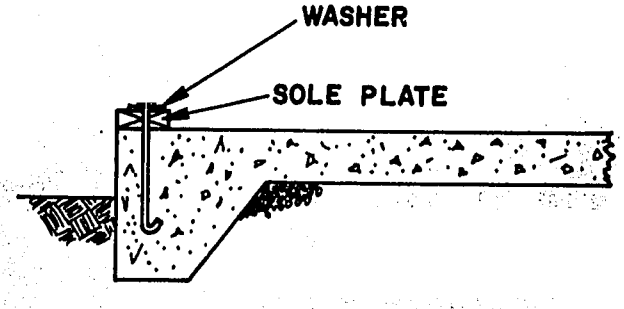

FIGURE 56 ANCHOR BOLT THROUGH CONCRETE BLOCK FOUNDATION INTO FOOTING.

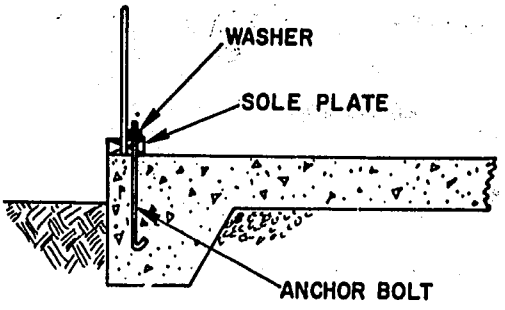

FIGURE 57 ANCHOR BOLT INSTALLED ON PROTECTED SIDE OF WALL.

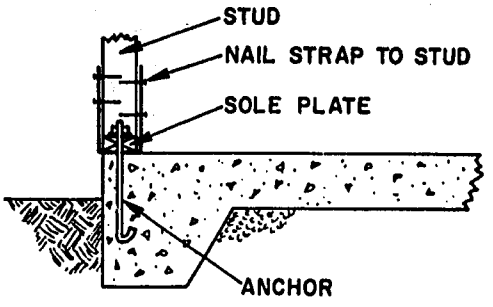

FIGURE 58 SHEET METAL STRAP TYING STUD TO BOTTOM PLATE.

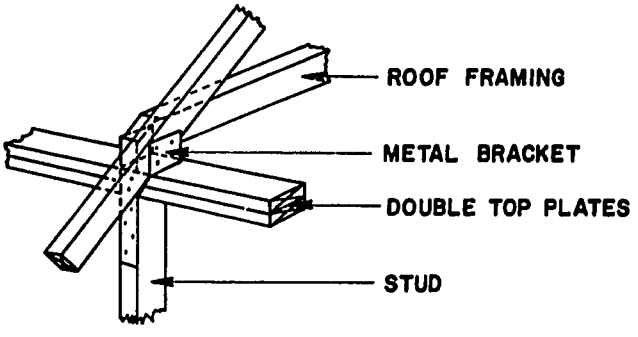

FIGURE 59 SHEET METAL BRACKET FOR TYING ROOF FRAMING TO WALLS.

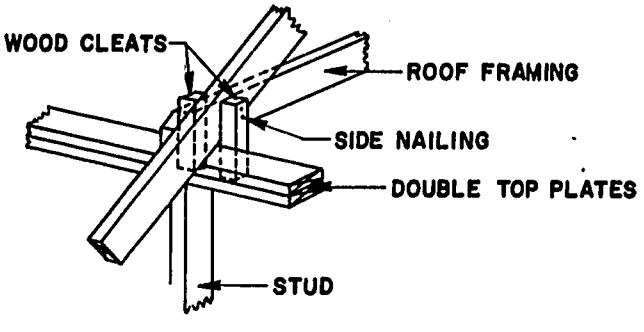

FIGURE 60 WOOD CLEATS NAILED TO EACH SIDE OF ROOF FRAMING AND TO TOP PLATES.

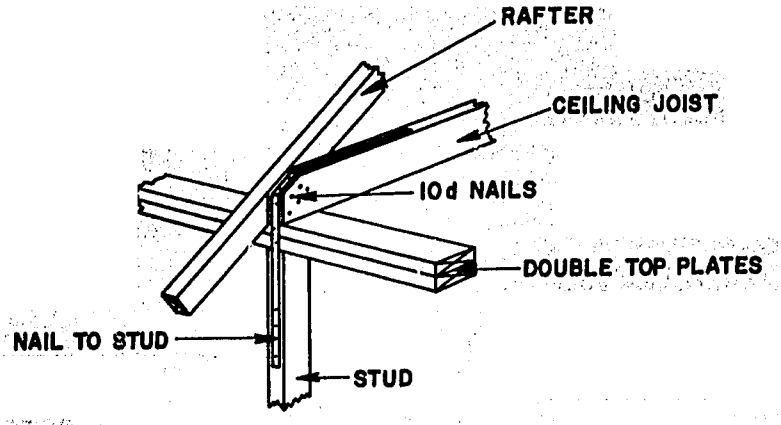

FIGURE 61 SHEET METAL STRAP NAILED TO CEILING JOIST AND STUD TO ANCHOR ROOF FRAMING TO WALL.

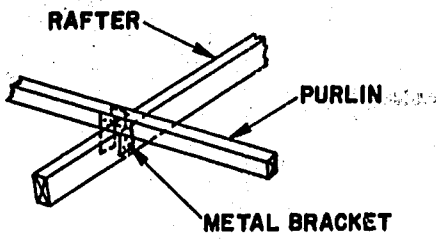

FIGURE 62 SHEET METAL BRACKET USED TO CONNECT PURLIN TO RAFTER.

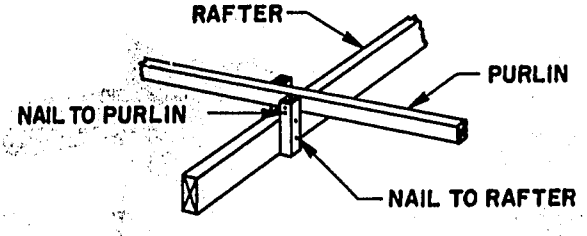

FIGURE 63 PURLINS TIED TO RAFTERS BY WOOD CLEATS.

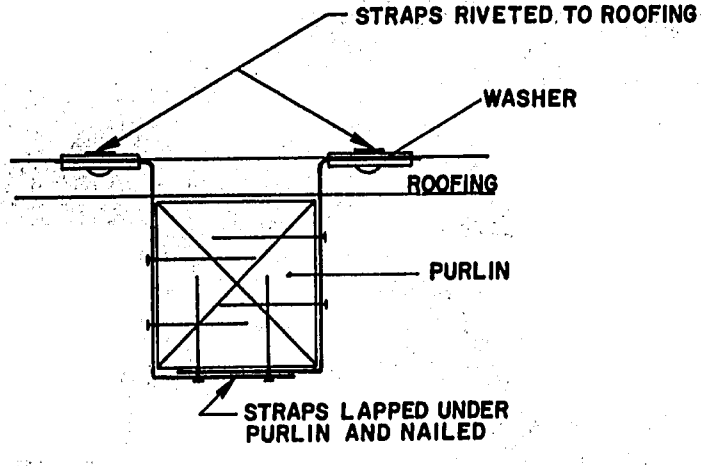

FIGURE 64 TWO METAL STRAPS RIVETED TO CORRUGATED ROOFING, LAPPED UNDER PURLIN AND NAILED TO PURLIN.

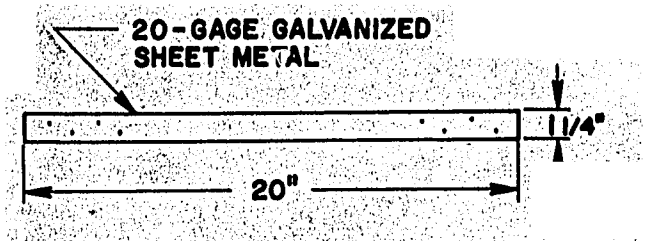

FIGURE 65 MULTI-PURPOSE STRAP; LENGTH AND WIDTH CAN BE VARIED FOR SPECIFIC APPLICATIONS.

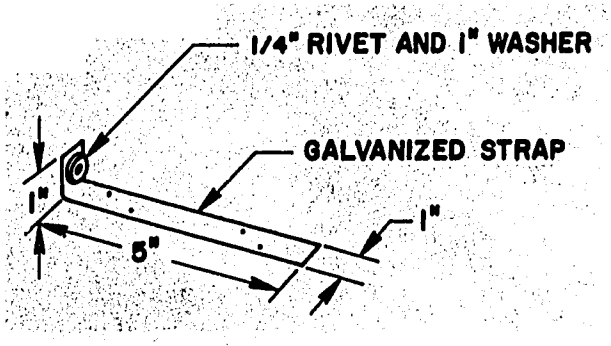

FIGURE 66 GALVANIZED SHEET METAL STRAP WITH RIVET AND WASHER FOR TYING DOWN CORRUGATED ROOFING.

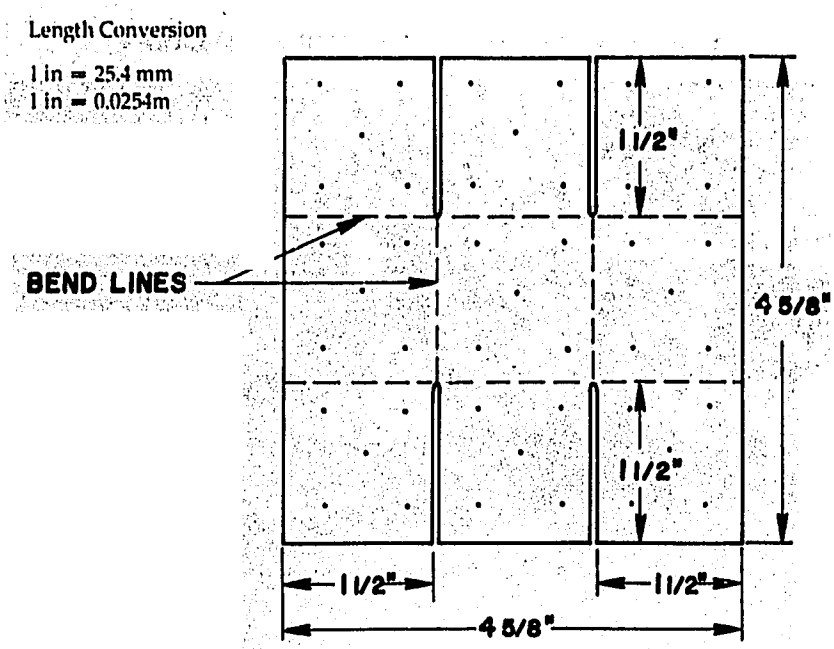

FIGURE 67 MULTI-PURPOSE BRACKET FABRICATED FROM 20-GAGE GALVANIZED STEEL; BEND EITHER DIRECTION AT BEND LINES TO FORM DESIRED BRACKET.

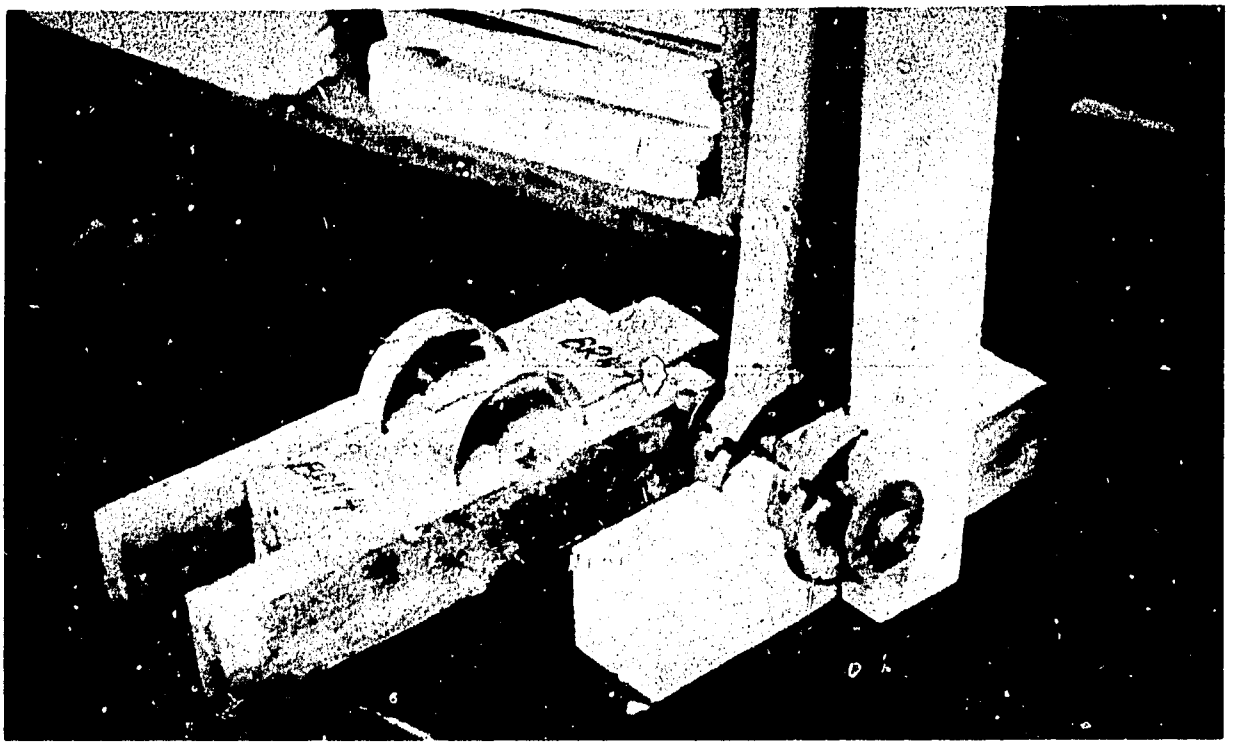

FIGURE 68 SPLIT-RING CONNECTOR FOR INDIGENOUS FABRICATION (LEFT), AND COMMERCIALLY PRODUCED SPLIT-RING CONNECTOR (RIGHT).

FIGURE 69 PLATE CONNECTOR WITH BARBS.

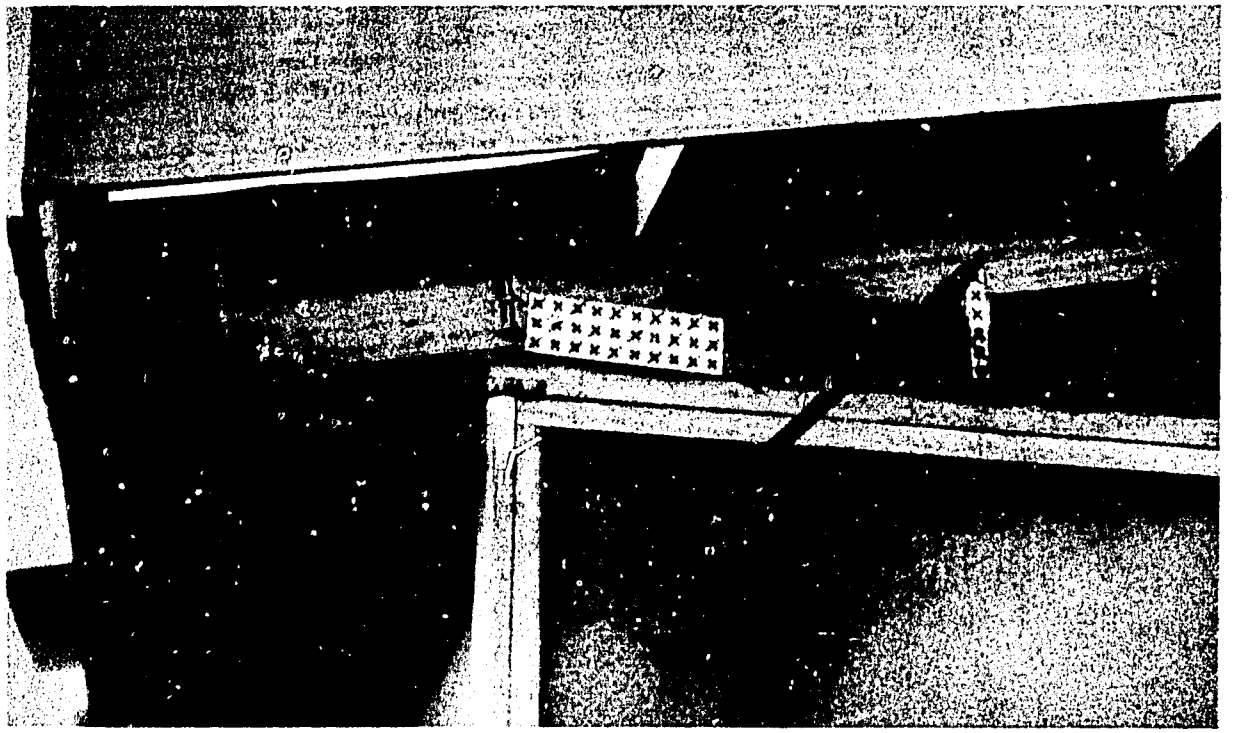

REFERENCES

(1) Raufaste, N.J., and Marshall, R. D., *FY 74 Progress Report on Design Criteria and Methodology for Construction of Low-Rise Buildings to Resist Typhoons and Hurricanes*, NBSIR 74-567 (Washington, D.C.: National Bureau of Standards, July 1, 1974).

(2) Reps W.F., and Simiu, E., editors, *Design, Siting, and Construction of Low-Cost Housing and Community Buildings to Better Withstand Earthquakes and Windstorms*, BSS-48 (Washington, D.C.: National Bureau of Standards, January 1974).

(3) *Sweet's Industrial Construction Catalog File* (New York: Sweet's Division, McGraw-Hill Information Systems Company, n.d.).

(4) *Standard for Mobile Homes*, ANSI A119.1-1974, and Appendix D, ANSI A119.1-1975 (New York: American National Standards Institute, 1974).

(5) *Protecting Mobile Homes from High Winds*, TR-75 (Baltimore: Defense Civil Preparedness Agency, Department of Defense, 1972).

(6) Narajanamurty, D., and Mohan, D., *The Use of Bamboo and Reeds in Building Construction*, no. E.72, IV. 3(New York: United Nations, n.d.).

(7) *Pole House Construction* (McLean: American Wood Preservers Institute, 1971).

(8) *Concrete Masonry Design Manual* (Los Angeles: Concrete Association, 1955).

(9) *ASTM Standards* (Philadelphia: American Society for Testing and Materials, n.d.).

(10) Raufaste, N.J., and Marshall, R.D., *FY 1973 Progress Report on Design Criteria and Methodology for Construction of Low-Rise Buildings to Better Resist Typhoons and Hurricanes*, NBSIR 74-582 (Washington, D.C.: National Bureau of Standards, 1973).

(11) Raufaste, N.J., and Marshall, R.D., editors, *Development of Improved Design Criteria for Low-Rise Buildings in Developing Countries to Better Resist the Effects of Extreme Winds*, BSS 56 (Washington, D.C.: National Bureau of Standards, 1974).

(12) *Housing and Urban Development in the Philippines* (Manila: USAID Mission, 1968).

(13) "Amendment No. 1 to Specification for Portland Cement," *Philippine Trade Standard 661-01.02: 1972* (Manila: Bureau of Standards, 1972).

(14) "Specification for Portland Cement," *Philippine Trade Standard 661-01.02* (Manila: Bureau of Standards, 1968).

(15) "Standard Specification for Glazed Ceramic Tiles and Tile Fittings," *PHILSA I-10-72* (Quezon City: Philippine Standards Association, 1972).

(16) "Standard Specification for Philippine Cold Drawn Steel Wire for Concrete Reinforcement," *PHILSA I-5-71* (Quezon City: Philippine Standards Association, 1972).

(17) "Standard Specifications for Steel Reinforcement Bar," *PHILSA I-7-71*, (Quezon City: Philippine Standards Association, 1975).

(18) "Standard Specifications for Construction Lime," *PHILSA I-1-68* (Manila: Philippine Standards Association, 1968).

(19) "Masonry", *PACE CP 206* (Manila: Philippine Association of Civil Engineers, 1965).

(20) "Private Practice of Structural Engineering," *Manual of Engineering Practice No. 1* (Quezon City: Association of Structural Engineers of the Philippines, 1973).

(21) "Private Practice of Civil Engineering," *PACE Manual of Engineering Practice No. 1* (Manila: Philippine Association of Civil Engineers, 1960).

(22) "Code of Practice for the Design, Fabrication and Erection of Structural Steel Members with Minimum Thickness of 1/8" for Buildings," *PACE CP 205* (Manila: Philippine Association of Civil Engineers, 1968).

(23) "Engineering Standards," *PACE CP 200* (Manila: Philippine Association of Civil Engineers, 1965).

(24) "Excavations and Foundations," *PACE CP 201* (Manila: Philippine Association of Civil Engineers, 1965).

(25) *National Structural Code of Buildings* (Manila: Philippine Association of Civil Engineers, 1972).

(26) *Thomas Register of American Manufacturers and Catalog File* (New York: Thomas Publishing Company, n.d.).

(27) *Proceedings of Conference on Unified Building Code* (Kingston: Caribbean Council of Engineering Organizations, n.d.).

(28) *Specification for the Design and Construction of Load-Bearing Concrete Masonry* (Arlington: National Concrete Masonry Association (NCMA), n.d.).

(29) *Research Data with Commentary in Support of Specification for the Design and Construction of Load-Bearing Concrete Masonry* (Arlington: National Concrete Masonry Association, n.d.).

(30) *Report on Concrete Masonry Structures-Design and Construction, ACI Committee 531* (American Concrete Institute Journal, 1970).

(31) *American Standard Building Code Requirements for Masonry, ANSI A41*, Miscellaneous Publication 211 (Washington, D.C.: National Bureau of Standards, 1954).

(32) *Uniform Building Code (Whittier: International Conference of Building Officials, 1973).*

(33) Toennies, H., and Merteu, John, E., *Concrete Masonry Vocational Training Students' Manual* (Arlington: National Concrete Masonry Association, n.d.).

(34) *NCMA TEK Series (Arlington: National Concrete Masonry Association, n.d.).*

(35) Yokel, F.Y., Mathey, R.G., and Dikkers, R.D., *Compressive Strength of Slender Concrete Masonry Walls*, BS 33 (Washington, D.C.: National Bureau of Standards, 1970).

(36). Yokel, F.Y., Mathey, R.G., and Dikkers, R.D., *Strength of Masonry Walls Under Compression and Transverse Loads*, BSS 34 (Washington, D.C.: National Bureau of Standards, 1971).

(37) Yokel, F.Y., and Dikkers, R.D., "Strength of Load-Bearing Masonry Walls," *Journal of the Structural Division* (New York: American Society of Civil Engineers, May 1971).

(38) Yokel, F.Y., "Stability and Load Capacity of Members with No Tensile Strength," *Journal of the Structural Division* (New York: American Society of Civil Engineers, July 1971).

(39) Fishburn, C., *Effect of Mortar Properties on Strength of Masonry*, NBS Monograph 36 (Washington, D.C.: National Bureau of Standards, 1961).

(40) Dikkers, R.D., and Saxer, E.L., *Flexural Strength of Plain and Reinforced Concrete Masonry Walls* (Arlington: National Concrete Masonry Association, 1957).

(41) Livingston, A.R., Mangotich, E., and Dikkers, R.D., *Flexural Strength of Hollow Unit Concrete Masonry Walls, in the Horizontal Span* (Arlington: National Concrete Masonry Association, 1958).

(42) Moss, P.J., and Scrivener, J.C., "Concrete Masonry Wall Panel Tests, New Zealand Concrete Construction," *Journal of the New Zealand Portland Cement Association* (New Zealand Portland Cement Association, 1968).

(43) Scrivener, J.C., "Static Racking Tests on Concrete Masonry Walls" (International Conference on Masonry Structural Systems) (Austin: n.p., 1967).

(44) Amrhein, J.E., *Reinforced Masonry Engineering Handbook* (Los Angeles: Masonry Institute of America, 1972).

(45) Amrhein, J.E., *Masonry Design Manual* (Masonry Industry Advancement Committee, 1972).

(46) Schneider, R.R., *Shear in Concrete Masonry Piers* (Los Angeles: Masonry Research of Los Ageles, 1969).

(47) *National Design Specifications for Stress-Grade Lumber and Its Fastenings* (Washington, D.C.: National Forest Products Association, 1973).
(48) *Design Specifications for Light Metal Plate Connected Wood Trusses (College Park: Truss Plate Institute, n.d.).*
(49) *Products in Action* (Washington, D.C.: Timber Engineering Company, n.d.).

ACKNOWLEDGMENTS

The contributions of the following persons are acknowledged:

Noel Raufaste, Jr., Center for Building Technology, for supplying field survey documentation and for critically reviewing the report.

Deborah Borkman, Cathy Warfield, and *Julie Reinhold,* Center for Building Technology, for typing the manuscript.

Thomas Ruschell and *Louis Cattaneo,* Center for Building Technology, for organizing and proofreading the report.

Ricardo Florez, Guest Worker, Center for Building Technology, for his assistance in preparing figures and for his constructive suggestions.

Stephen Kliment, AIA, New York City, for supplying those figures and references relating to pole type construction.

Charles Yancey, Center for Building Technology, for critically reviewing the report.

Charles Raley, Office of International Relations, for critically reviewing the report.

(cut here)

ANNOUNCEMENT OF NEW PUBLICATIONS IN BUILDING SCIENCE SERIES

Superintendent of Documents,
Government Printing Office,
Washington, D.C., 20402

Dear Sir:

Please add my name to the announcement list of new publications to be issued in the series: National Bureau of Standards Building Science Series.

Name.....

Company.....

Address.....

City.....State.....Zip Code.....

(Notification key N-339)

NBS TECHNICAL PUBLICATIONS

PERIODICALS

JOURNAL OF RESEARCH reports National Bureau of Standards research and development in physics, mathematics, and chemistry. It is published in two sections, available separately:

- **Physics and Chemistry (Section A)**

Papers of interest primarily to scientists working in these fields. This section covers a broad range of physical and chemical research, with major emphasis on standards of physical measurement, fundamental constants, and properties of matter. Issued six times a year. Annual subscription: Domestic, $17.00; Foreign, $21.25.

- **Mathematical Sciences (Section B)**

Studies and compilations designed mainly for the mathematician and theoretical physicist. Topics in mathematical statistics, theory of experiment design, numerical analysis, theoretical physics and chemistry, logical design and programming of computers and computer systems. Short numerical tables. Issued quarterly. Annual subscription: Domestic, $9.00; Foreign, $11.25.

DIMENSIONS/NBS (formerly Technical News Bulletin)—This monthly magazine is published to inform scientists, engineers, businessmen, industry, teachers, students, and consumers of the latest advances in science and technology, with primary emphasis on the work at NBS. The magazine highlights and reviews such issues as energy research, fire protection, building technology, metric conversion, pollution abatement, health and safety, and consumer product performance. In addition, it reports the results of Bureau programs in measurement standards and techniques, properties of matter and materials, engineering standards and services, instrumentation, and automatic data processing.

Annual subscription: Domestic, $12.50; Foreign, $15.65.

NONPERIODICALS

Monographs—Major contributions to the technical literature on various subjects related to the Bureau's scientific and technical activities.

Handbooks—Recommended codes of engineering and industrial practice (including safety codes) developed in cooperation with interested industries, professional organizations, and regulatory bodies.

Special Publications—Include proceedings of conferences sponsored by NBS, NBS annual reports, and other special publications appropriate to this grouping such as wall charts, pocket cards, and bibliographies.

Applied Mathematics Series—Mathematical tables, manuals, and studies of special interest to physicists, engineers, chemists, biologists, mathematicians, computer programmers, and others engaged in scientific and technical work.

National Standard Reference Data Series—Provides quantitative data on the physical and chemical properties of materials, compiled from the world's literature and critically evaluated. Developed under a world-wide program coordinated by NBS. Program under authority of National Standard Data Act (Public Law 90-396).

NOTE: At present the principal publication outlet for these data is the Journal of Physical and Chemical Reference Data (JPCRD) published quarterly for NBS by the American Chemical Society (ACS) and the American Institute of Physics (AIP). Subscriptions, reprints, and supplements available from ACS, 1155 Sixteenth St. N.W., Wash. D. C. 20056.

Building Science Series—Disseminates technical information developed at the Bureau on building materials, components, systems, and whole structures. The series presents research results, test methods, and performance criteria related to the structural and environmental functions and the durability and safety characteristics of building elements and systems.

Technical Notes—Studies or reports which are complete in themselves but restrictive in their treatment of a subject. Analogous to monographs but not so comprehensive in scope or definitive in treatment of the subject area. Often serve as a vehicle for final reports of work performed at NBS under the sponsorship of other government agencies.

Voluntary Product Standards—Developed under procedures published by the Department of Commerce in Part 10, Title 15, of the Code of Federal Regulations. The purpose of the standards is to establish nationally recognized requirements for products, and to provide all concerned interests with a basis for common understanding of the characteristics of the products. NBS administers this program as a supplement to the activities of the private sector standardizing organizations.

Consumer Information Series—Practical information, based on NBS research and experience, covering areas of interest to the consumer. Easily understandable language and illustrations provide useful background knowledge for shopping in today's technological marketplace.

Order **above** *NBS publications from: Superintendent of Documents, Government Printing Office, Washington, D.C. 20402.*

Order **following** *NBS publications—NBSIR's and FIPS from the National Technical Information Services, Springfield, Va. 22161.*

Federal Information Processing Standards Publications (FIPS PUBS)—Publications in this series collectively constitute the Federal Information Processing Standards Register. Register serves as the official source of information in the Federal Government regarding standards issued by NBS pursuant to the Federal Property and Administrative Services Act of 1949 as amended, Public Law 89-306 (79 Stat. 1127), and as implemented by Executive Order 11717 (38 FR 12315, dated May 11, 1973) and Part 6 of Title 15 CFR (Code of Federal Regulations).

NBS Interagency Reports (NBSIR)—A special series of interim or final reports on work performed by NBS for outside sponsors (both government and non-government). In general, initial distribution is handled by the sponsor; public distribution is by the National Technical Information Services (Springfield, Va. 22161) in paper copy or microfiche form.

BIBLIOGRAPHIC SUBSCRIPTION SERVICES

The following current-awareness and literature-survey bibliographies are issued periodically by the Bureau:

Cryogenic Data Center Current Awareness Service. A literature survey issued biweekly. Annual subscription: Domestic, $25.00; Foreign, $30.00.

Liquified Natural Gas. A literature survey issued quarterly. Annual subscription: $20.00.

Superconducting Devices and Materials. A literature survey issued quarterly. Annual subscription: $30.00. Send subscription orders and remittances for the preceding bibliographic services to National Bureau of Standards, Cryogenic Data Center (275.02) Boulder, Colorado 80302.

U.S. DEPARTMENT OF COMMERCE
National Bureau of Standards
Washington, D.C. 20234

OFFICIAL BUSINESS

Penalty for Private Use $300

POSTAGE AND FEES PAID
U.S. DEPARTMENT OF COMMERCE
COM-215

U.S. MAIL

SPECIAL FOURTH CLASS RATE
BOOK