AGENCY FOR INTERNATIONAL DEVELOPMENT
WASHINGTON, D. C. 20523
BIBLIOGRAPHIC INPUT SHEET

FOR AID USE ONLY
Batch 49

1. SUBJECT CLASSIFICATION
A. PRIMARY: Food production and nutrition — AP12-0000-0000
B. SECONDARY: Drainage and irrigation

2. TITLE AND SUBTITLE
Discharge through inclined gates

3. AUTHOR(S)
Chen,Chia-shyun

4. DOCUMENT DATE: 1977
5. NUMBER OF PAGES: 87p.
6. ARC NUMBER: ARC

7. REFERENCE ORGANIZATION NAME AND ADDRESS
Colo.State

8. SUPPLEMENTARY NOTES (Sponsoring Organization, Publishers, Availability)
(Thesis M.S.--Colo.State)

9. ABSTRACT

Losses of water along irrigation watercourses contribute to low overall irrigation efficiencies in less developed countries. This thesis investigates discharge efficiencies of submerged gates for controlling flow in irrigation watercourses. Two types of gates suitable for use as both control and measurement structures were designed in Pakistan by the Colorado State University Water Management Research Group. Both were made to fit into a channel at a 45 degree inclination, so that gravity would assist in sealing against leakage. Hydraulic data was collected under free flow and submerged flow conditions for test gates with both circular and rectangular openings. The method of submerged flow analysis reported by Villemonte was used in developing the rating curves for the gates. These ratings were then compared with those obtained for vertical weirs in order to observe the effect of the 45 degree inclination of the test gates. The conclusions, mainly expressed mathematically, address questions of when and how free-flow weir equations should be applied. Recommendations are made regarding further research.

10. CONTROL NUMBER
PN-AAD-122

11. PRICE OF DOCUMENT

12. DESCRIPTORS
Equations
Flow measurement
Hydraulic structures
Orifices
Weirs

13. PROJECT NUMBER

14. CONTRACT NUMBER
CSD-2460 211(d)

15. TYPE OF DOCUMENT

AID 590-1 (4-74)

CSD-2460 211(d)
PN-AAD-122
Colo. State

THESIS

DISCHARGE THROUGH INCLINED GATES

Submitted by

Chia-Shyun Chen

In partial fulfillment of the requirement

for the degree of Master of Science

Colorado State University

Fort Collins, Colorado

Spring, 1977

ABSTRACT OF THESIS

DISCHARGE THROUGH INCLINED GATES

Four gates, one rectangular and three circular, installed at 45 degrees to the channel bottom, were investigated. The rectangular gate performed as a submerged weir only. The circular gates performed as submerged weirs when the upstream water depth was below the top of the circular opening, and performed as orifices when the upstream water depth was above the top of the circular opening. Two kinds of nappes, surface nappe and plunging nappe, were observed in the submerged weir flow conditions. Weir discharges under plunging nappe flow were independent of downstream water depth, so these data were used to calibrate the free flow discharge equations. The free flow discharge coefficient for the rectangular gate was constant, and for the circular gates was a function of the ratio of upstream head to the crest height. Data for the surface nappe condition were used to calibrate the submerged flow discharge equations. The submerged flow discharge coefficients for all gates were functions of submergence ratio and opening configurations, and different by multiplicative constant from reported coefficient for vertical sharp-crested weirs. The discharge equations for orifice flow were functions of opening configurations.

Chia-Shyun Chen
Agricultural Engineering Department
Colorado State University
Fort Collins, Colorado 80523
Spring, 1977

ACKNOWLEDGMENTS

The author wishes to express his sincere thanks to his adviser, Dr. William Hart, for the time and guidance he put into this work. The contributions of Dr. Everett Richardson and Dr. Wynn Walker are also appreciated.

Special thanks are due to the author's wife, Chi-Mei, who did the job of typing the final manuscript and encouraged the author all the time.

This work was supported by funds from the United States Agency for International Development under Contract No. AID/csd-2460, "Optimum Utilization of Water Resources for Agriculture with Special Emphasis on Water Removal and Delivery Systems and Relevant Institutional Development." Partial support was also provided by USAID Contract AID/ta-c-1100.

TABLE OF CONTENTS

Chapter		Page
	LIST OF TABLES	vii
	LIST OF FIGURES	viii
	LIST OF SYMBOLS	x
I	INTRODUCTION	1
	Purpose	2
	Scope	2
II	DEVELOPMENT OF WEIR AND ORIFICE EQUATIONS.	3
	General Features	3
	Basic Equations for Weirs and Orifices	3
	Orifice Equation	4
	Weir Equation	7
III	DERIVATION OF CIRCULAR WEIR EQUATION	12
	Derivation	12
IV	SUBMERGED WEIR FLOW ANALYSIS	22
V	EXPERIMENT FACILITIES AND GATE GEOMETRIES.	29
VI	RESULTS AND DISCUSSIONS	36
	Results	36
	Dimensional Analysis	36
	Weir Performance--Free Flow	38
	Weir Performance--Submerged Flow	40
	Orifice Performance	45
	Discussions	49
	Head Measurement	49
	The Effect of Submergence Ratio.	51
	The Discharge Coefficient for the Inclined Submerged Weir.	52

ACKNOWLEDGMENTS

The author wishes to express his sincere thanks to his adviser, Dr. William Hart, for the time and guidance he put into this work. The contributions of Dr. Everett Richardson and Dr. Wynn Walker are also appreciated.

Special thanks are due to the author's wife, Chi-Mei, who did the job of typing the final manuscript and encouraged the author all the time.

This work was supported by funds from the United States Agency for International Development under Contract No. AID/csd-2460, "Optimum Utilization of Water Resources for Agriculture with Special Emphasis on Water Removal and Delivery Systems and Relevant Institutional Development." Partial support was also provided by USAID Contract AID/ta-c-1100.

LIST OF TABLES

Table		Page
1	Values of $PL(H_1/D) = 112.28\ (H_1/D)^2 - 28.84\ (H_1/D)^3 - 4.62\ (H_1/D)^4 - 1.68\ (H_1/D)^5$	21
2	Dimensions of Test Gates, All Variables Refer to Fig. 5.3	35
3	Discharge Equations for Models Investigated	58
4	Hydraulic Laboratory Data for Rectangular Gate with a Crest Height of 0.08 m	61
5	Hydraulic Laboratory Data for 0.38 m Diameter Circular Gate with a Crest Height of 0.14 m, Weir Flow	63
6	Hydraulic Laboratory Data for 0.38 m Diameter Circular Gate with a Crest Height of 0.14 m, Orifice Flow	67
7	Hydraulic Laboratory Data for 0.38 m Diameter Circular Gate with a Crest Height of 0.19 m, Weir Flow	71
8	Hydraulic Laboratory Data for 0.38 m Diameter Circular Gate with a Crest Height of 0.19 m, Orifice Flow	73
9	Hydraulic Laboratory Data for 0.48 m Diameter Circular Gate with a Crest Height of 0.18 m, Weir Flow	75
10	Hydraulic Laboratory Data for 0.48 m Diameter Circular Gate with a Crest Height of 0.18 m, Orifice Flow	77

LIST OF FIGURES

Figure		Page
2.1	Free Jet Orifice	6
2.2	Submerged Jet Orifice	6
2.3	Front View of Flow over a Rectangular Weir .	8
2.4	Sharp-Crested Weir	8
3.1	Circular Weir	13
3.2	Curve of Function $PL(H_1/D) = 112.28\ (H_1/D)^2 - 28.84\ (H_1/D)^3 - 4.62\ (H_1/D)^4 - 1.68\ (H_1/D)^5$	20
4.1	Submerged Weir	23
4.2	Three Types of Weir Flow (After Vennard) . .	27
5.1	Plan View of Experimental Facilities	30
5.2	Illustration of Crest Height for Inclined Gate	33
5.3	Configurations of Gates	34
6.1	Free Flow Discharge Coefficient, C_{df}, for Circular Gates; As a Function of Ratio of Upstream Head to Crest Height, H_1/P. $C_{df} = 0.090 - 0.080\ (H_1/P)$, Correlation Coefficient $r^2 = 0.973$	39
6.2	Submerged Weir Flow Discharge Coefficient, C_{ds}, for Rectangular Gate with a Crest Height of 0.08 m; As a Function of $1 - S^{3/2}$, S is the Submergence Ratio. $C_{ds} = 2.069\ (1 - S^{3/2})^{0.393}$, Correlation Coefficient $r^2 = 0.987$	42
6.3	Submerged Weir Flow Discharge Coefficient, C_{ds}, for 0.38 m Diameter Circular Gate with a Crest Height of 0.14 m; As a Function of $1 - S^2$, S is the Submergence Ratio. $C_{ds} = 1.128\ (1 - S^2)^{0.385}$, Correlation Coefficient $r^2 = 0.990$	43

LIST OF FIGURES (Continued)

Figure		Page
6.4	Submerged Weir Flow Discharge Coefficient, C_{ds}, for 0.38 m Diameter Circular Gate with a Crest Height of 0.19 m; As a Function of $1 - S^2$, S is the Submergence Ratio, $C_{ds} = 1.062\ (1 - S^2)^{0.378}$, Correlation Coefficient $r^2 = 0.997$	44
6.5	Submerged Weir Flow Discharge Coefficient, C_{ds}, for 0.46 m Diameter Circular Gate with a Crest Height of 0.18 m; As a Function of $1 - S^2$, S is the Submergence Ratio, $C_{ds} = 1.210\ (1 - S^2)^{0.392}$, Correlation Coefficient $r^2 = 0.993$	46
6.6	Submerged Orifice Flow Discharge, Q, for the 0.38 m Diameter Circular Gate with a Crest Height of 0.14 m; As a Function of Head Difference, H $(H_1 - H_2)$, $Q = 13.6\ H^{0.477}$, Correlation Coefficient $r^2 = 0.992$	47
6.7	Submerged Orifice Flow Discharge, Q, for the 0.38 m Diameter Circular Gate with a Crest Height of 0.19 m; As a Function of Head Difference, H $(H_1 - H_2)$, $Q = 13.3\ H^{0.477}$, Correlation Coefficient $r^2 = 0.989$	48
6.8	Submerged Orifice Flow Discharge, Q, for the 0.46 m Diameter Circular Gate with a Crest Height of 0.18 m; As a Function of Head Difference, H $(H_1 - H_2)$, $Q = 21.3\ H^{0.475}$, Correlation Coefficient $r^2 = 0.990$	50

IST OF SYMBOLS

Symbol	Definition
A	Area of flow at weir notch or orifice, L^2
A_0	Area of flow at vena contracta, L^2
B	Width of channel, L
C	Cauchy number
C_c	Contraction coefficient
C_d	Discharge coefficient
C_{df}	Discharge coefficient for free flow condition
C_{ds}	Discharge coefficient for submerged flow condition
C_v	Velocity coefficient
D	Diameter of circular weir, L
F	Froude number
g	Acceleration due to gravity, LT^{-2}
h	Head on an elementary area, L
H	Head difference, $H_1 - H_2$, L
H_1	Upstream head, L
H_2	Downstream head, L
K	Coefficient of submerged weir flow discharge coefficient, see Eq. 4-4
L	Length of rectangular weir notch, L
L'	Effective length of contracted weir, L
m	Exponent of submerged weir flow discharge coefficient, see Eq. 4-4
n	Exponent of weir equations
N	Number of end contractions
P	Crest height, L
Q	Actual total discharge, L^3T^{-1}

LIST OF SYMBOLS (Continued)

Symbol	Definition
Q'	Ideal total discharge, L^3T^{-1}
Q_f	Free flow discharge, L^3T^{-1}
Q_s	Submerged flow discharge, L^3T^{-1}
r	Correlation coefficient
R	Radius of circular weir, L
R_e	Reynolds number
S	Submergence ratio, H_2/H_1
V	Velocity of approach, LT^{-1}
V_a	Mean velocity in the channel of approach above the crest level, LT^{-1}
V_b	Mean velocity in the channel of approach below the crest level, LT^{-1}
V_t	Theoretical velocity at weir notch or orifice, LT^{-1}
W	Weber number
Y_1	Upstream water depth, L
Y_2	Downstream water depth, L
α	Coefficient corrects for inequality of velocity in the approach channel
γ	Specific weight, $ML^{-2}T^{-2}$
ε	Elastic molulus, $ML^{-1}T^{-2}$
ρ	Density of mass, ML^{-3}
σ	Surface tension, MT^{-2}
μ	Dynamic viscosity, $ML^{-1}T^{-1}$
Γ	Gamma function

CHAPTER I

INTRODUCTION

It has been demonstrated that losses along water courses (channels which receive water from the distributory and discharge that water into individual farmer's fields, or into branch water courses) are a primary cause of low overall irrigation efficiencies in less developed countries (LDC). A particular need in overcoming these low efficiencies is effective control and measurement structures. Proper control structures allow diversion of water to where it is needed, and measurement structures provide the data necessary to evaluate overall irrigation efficiencies.

Two types of gates which can be used as both control and measurement structures, and which are adaptable for use in LDC's, have been designed in Pakistan by the Colorado State University Water Management Research Group (1)*. Both are designed to fit into a channel or channel constriction of rectangular section. One has a rectangular opening and the other a circular opening. Both are installed at a 45 degree inclination to the horizontal so that gravity will assist in holding the gate in place and in sealing it against leakage. In both cases, a compressible sponge rod is used as the sealing material. The gate frames and gate closure panels are cast of reinforced concrete.

*Numbers in parentheses refer to similarly numbered items in the Literature Cited.

PURPOSE

The purpose of the current investigation is to determine the discharge equations of the gates mentioned above.

SCOPE

Four gates were used in this study, three of which have a circular opening, the fourth of which had a rectangular opening. The rectangular gate had a 0.46 m wide opening and a 0.11 m high crest. For the circular gates, two opening diameters were studied, 0.38 m and 0.46 m. The 0.46 m diameter gate had a crest height of 0.20 m. The other two circular gates had the same diameter opening, 0.38 m, but different crest heights, 0.16 m and 0.22 m.

The hydraulic data were collected under both free flow and submerged flow conditions. The method of submerged flow analysis reported by Villemonte (2) was utilized in developing the rating curves for those gates operating under submerged flow conditions. These ratings were then compared with those obtained for vertical weirs (2) in order to

HAPTER II

DEVELOPMENT OF WEIR AND ORIFICE EQUATIONS

GENERAL FEATURES

By means of the law of energy conservation, nearly any kind of a contraction to flow in a closed conduit or an open channel can be employed as a metering device. In this study, the two types of gates were used as discharge metering devices. The rectangular one performed as a submerged weir with partial contraction. The circular one performed as an orifice when the water surface upstream from the gate was above the top of the opening. It performed as a submerged weir when the upstream water surface drops below the top of the opening.

Generally, weirs are classified (3) as head-area meters. They apply only to open conduits and involve a simultaneous variation of head and area, which means that the area of the fluid flowing through the weir notch is a function of the upstream head. Orifices can be used either in closed conduits or in open conduits. In both cases, the cross-sectional area of the fluid flowing through the opening is constant and hence they are classified as head meters.

BASIC EQUATIONS FOR WEIRS AND ORIFICES

It was shown by Mavis (4) that orifices and all simple, exponential-shape weirs bear a single-family relationship of the form:

$$Q_f = C_d A\sqrt{H_1} \qquad (2\text{-}1)$$

where Q_f = free-flow discharge, C_d = a discharge coefficient, A = area of fluid flowing through the notch, H_1 = head on the crest.

As stated above, the area A in Eq. 2-1 is a constant when in orifice flow, and A is a function of H_1 when weir flow occurs. The specific equations for orifices and weirs are now discussed.

ORIFICE EQUATION

The velocity of a fluid approaching an orifice or similar device is called the velocity of approach. In Fig. 2.1 it is assumed that the plan area of the tank is so large relative to that of the orifice that the velocity at point (1) is negligible. If the Bernoulli equation is written between points (1) and (2), and it is recognized that the pressures at both points are equal to atmospheric pressure, then

$$V_{2t} = \sqrt{2gH_1}$$

where V_{2t} is the theoretical velocity because no friction loss is considered, H_1 is the head on the orifice, and g is the acceleration of gravity. Owing to friction the actual average velocity V_2 at point (2) is less than the theoretical velocity V_{2t} and the ratio $V_2/V_{2t} = C_v$ is called the velocity coefficient. Thus, $V_2 = C_v V_{2t}$. The actual discharge is

$$= A_o V_{2t} = (C_c A)\ (C_v\sqrt{2gH_1}) = C_c C_v A\sqrt{2gH_1} \qquad (2\text{-}2)$$

where C_c , the contraction coefficient, is the ratio of the area A_o at the vena contracta to the area of the orifice, A . The discharge coefficient C_d is introduced as

$$C_d = C_c C_v$$

Therefore, Eq. 2-2 can be written as

$$Q = C_d A\sqrt{2gH_1} \qquad (2\text{-}3)$$

Equation 2-3 is the discharge equation for a free jet orifice.

Figure 2.2 shows a submerged jet orifice. With the notation of Fig. 2.2, realizing that the pressure head in the vena contracta at point (2) is equal to y , the Bernoulli equation results in

$$H + y = y + V_{2t}^{2}/2g$$

and therefore,

$$V_{2t} = \sqrt{2gH}$$

where H is the difference between the upstream and downstream head (Fig. 2.2) According to the definitions just given, the actual discharge is

$$Q = C_d A\sqrt{2gH} \qquad (2\text{-}4)$$

Equation 2-4 is the discharge equation for a submerged jet orifice.

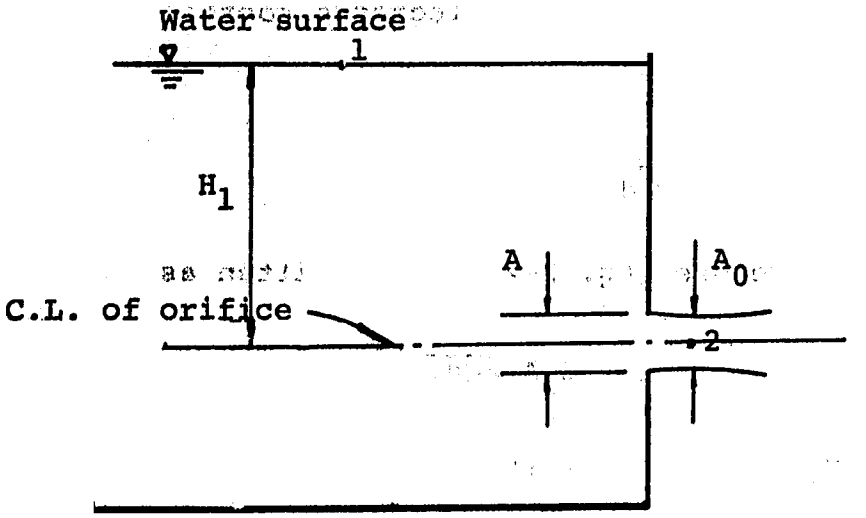

Fig. 2.1. Free Jet Orifice

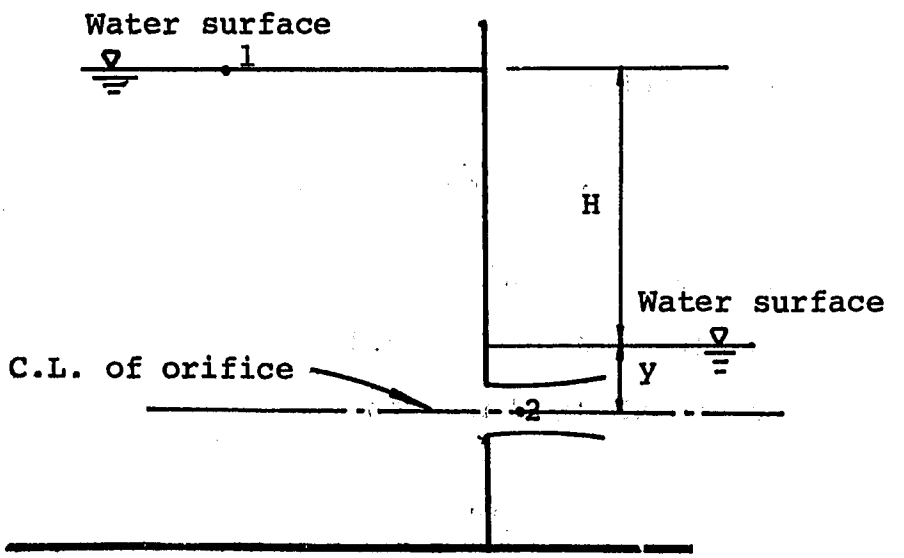

Fig. 2.2. Submerged Jet Orifice

WEIR EQUATION

In 1716 Poleni studied a rectangular sharp-crested weir without end contractions (Fig. 2.3) and assumed that the velocity over the vertical section at the crest must vary with the square root of the distance below the level of the approaching flow. To derive a flow equation for the weir, consider an elementary area $dA = Ldh$, and the velocity through this area is assumed to be $\sqrt{2gh}$. The total flow through the total area is

$$Q = C_d \int_0^{H_1} \sqrt{2gh}\, Ldh = 2/3\, C_d \sqrt{2g}\, L\, H_1^{3/2} \qquad (2\text{-}5)$$

where h is the head on an elemental area Ldh, H_1 is the head measured from the top of the crest to the undisturbed water surface (Fig. 2.4), and other symbols are as defined previously. This type of weir, with the sides of the channel acting as the ends of the weir, has no end contractions of the nappe, and is called a suppressed weir.

If the effect of approach velocity is included, the discharge equation is (5)

$$Q = CL[(H_1 + \alpha \frac{V^2}{2g})^{3/2} - (\alpha \frac{V^2}{2g})^{3/2}] \qquad (2\text{-}6)$$

where $C = 2/3 \sqrt{2g}\, C_d$ of Eq. 2-5, α = correction coefficient for inequality of velocities in the channel of approach, $V^2/2g$ = velocity head due to the mean velocity of approach, V, and H_1 = measured head as defined for Eq. 2-5.

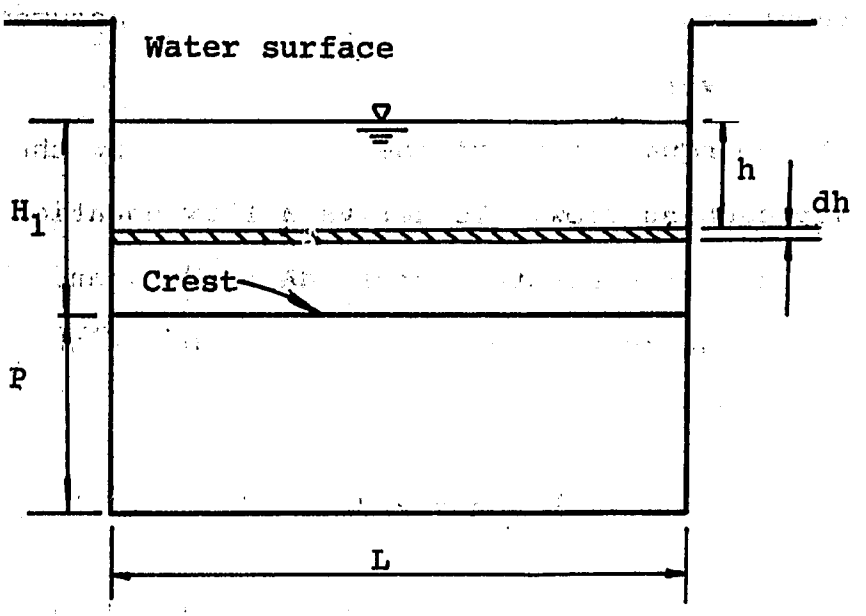

'ig. 2.3. Front View of Flow over a Rectangular Weir

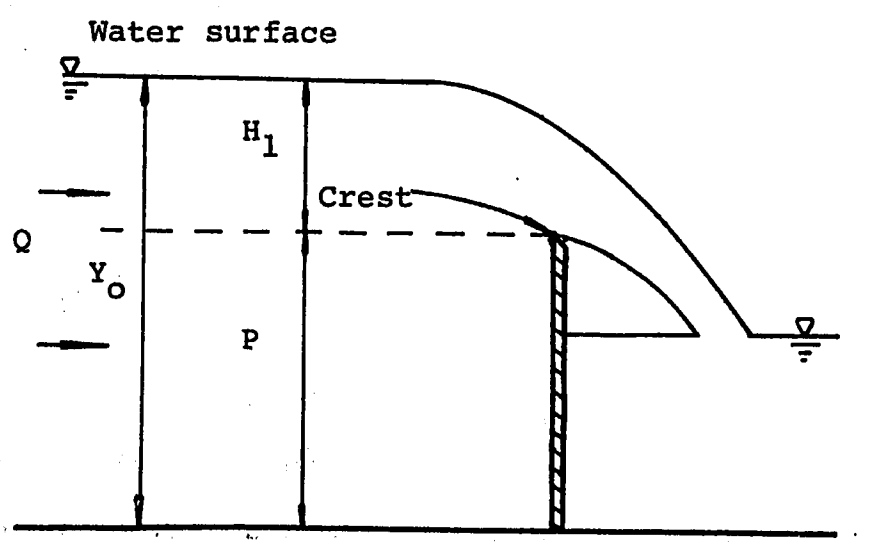

Fig. 2.4. Sharp-Crested Weir

If the sides of the notch have sharp upstream edges so that the nappe is contracted in width, the weir is said to have end contractions and is called a contracted weir. End contractions reduce the effective length of a weir. Francis (5) in 1852 found that

$$L' = L - 0.1\ NH_1 \tag{2-7}$$

where L' = effective length of weir, L = measured length, N = number of end contractions. For two complete end contractions, $N = 2$ and if the contraction is suppressed at one end only, $N = 1$. The measured head, H_1, is defined in Eq. 2-5. As a result, the Francis formula for a weir with both ends contracted, neglecting the velocity of approach (6), is

$$Q = 3.33\ H_1^{3/2}\ (L - 0.2\ H_1) \tag{2-8}$$

If the velocity of approach is included,

$$Q = 3.33\ [(H_1 + \frac{V^2}{2g})^{3/2} - (\frac{V^2}{2g})^{3/2}](L - 0.2\ H_1), \tag{2-9}$$

where all symbols are as previously defined.

Some additional important formulas for rectangular weirs are listed below (5). Those formulas are all written in the form for suppressed weirs. If there are end contractions, length L is represented with the effective length L' of Eq. 2-7. All formulas given here are in English units.

The Fteley and Sterns formula (1883):

$$Q = 3.31\ L\ (H_1 + 1.5\ \frac{V^2}{2g})^{3/2} + 0.007\ L$$

The Bazin formula (1888):

$$Q = 2/3\ \sqrt{2g}\ L\ H_1^{3/2}\ (0.6075 + \frac{0.01476}{H_1})\ x$$
$$(1 + 0.55\ \frac{H_1^2}{Y_1^2})$$

where Y_1 is the upstream water depth measured from the channel invert.

The Frese formula (1890):

$$Q = 2/3\ \sqrt{2g}\ L\ H_1^{3/2}\ (0.615 + \frac{0.00689}{H_1})\ x$$
$$(1 + 0.55\ \frac{H_1^2}{Y_1^2})$$

The Rehbock formula (1912):

$$Q = 2/3\ \sqrt{2g}\ L\ H_1^{3/2}\ (\ 0.605 + \frac{1}{320H_1 - 3} + \frac{0.08H_1}{P})$$

where P is the height of crest.

The King formula (1918):

$$Q = 3.34\ L\ H_1^{1.47}\ (1 + 0.56\ \frac{H_1^2}{Y_1^2})$$

The Swiss Society of Engineers and Architects formula (1924):

$$Q = 2/3\ \sqrt{2g}\ L\ H_1^{3/2}\ (0.615 + \frac{0.615}{305H_1 + 1.6})\ x$$
$$(1 + 0.5\ \frac{H_1^2}{Y_1^2})$$

The Schoder formula (1927):

$$Q = 3.33\ L\ [(H_1 + \frac{V_a^2}{2g})^{3/2} + \frac{H_1}{3.33}\frac{V_b^2}{2g}]$$

where V_a is the mean velocity in the channel of approach above the crest level and V_b is the mean velocity in the channel of approach below the crest level.

As discussed above, the velocity of approach and end contractions do have effects on the discharge. However, in this study, the simplest rectangular weir equation,

$$Q = C_d\ L\ \sqrt{2g}\ H_1^{3/2} \qquad (2\text{-}10)$$

is applied, which means that the effects of the velocity of approach and end contractions are included in the discharge coefficient, C_d .

As for the circular weir equation, there are no available formulas which can be used to compute the data collected for the circular gates. The derivation of the circular weir equation is by no means as simple as that for a rectangular weir and is given in detail in Chapter III. The submerged weir condition is discussed in Chapter IV.

CHAPTER III

DERIVATION OF CIRCULAR WEIR EQUATION

In this chapter the circular weir equation is derived. Two well-known mathematical relations are used here. The first of these is the binomial expansion,

$$(1-X)^n = 1-NX + \frac{N(N-1)}{2!} X^2 - \frac{N(N-1)(N-2)}{3!} X^3 + \frac{N(N-1)(N-2)(N-3)}{4!} X^4 + \ldots\ldots\ldots$$

which is convergent for the case $X^2 < 1$. In these studies $n = 1/2$, and the expansion becomes

$$(1-X)^{1/2} = 1 - \frac{1}{2} X - \frac{1}{8} X^2 - \frac{1}{16} X^3 - \frac{5}{128} X^4 - \frac{7}{256} X^5 - \ldots\ldots\ldots\ldots\ldots \qquad (3\text{-}1)$$

The second needed relationship is a definite integral,

$$\int_0^a X^m \, (a^2-X^2)^{n/2} \, dX = \frac{1}{2} a^{m+n+1} \frac{\Gamma(\frac{m+1}{2}) \Gamma(\frac{n+2}{2})}{\Gamma(\frac{m+n+3}{2})} \qquad (3\text{-}2)$$

where m , n are any real, positive numbers and $\Gamma(\omega)$ is the gamma function of ω

DERIVATION

With the notations of Fig. 3.1, assume that the ideal velocity of a stream filament issuing from a weir notch at a distance h below the undisturbed water surface is $\sqrt{2gh}$. The area of this filament, dA , is $2Xdh$, and hence the ideal discharge, Q' , through the total area is

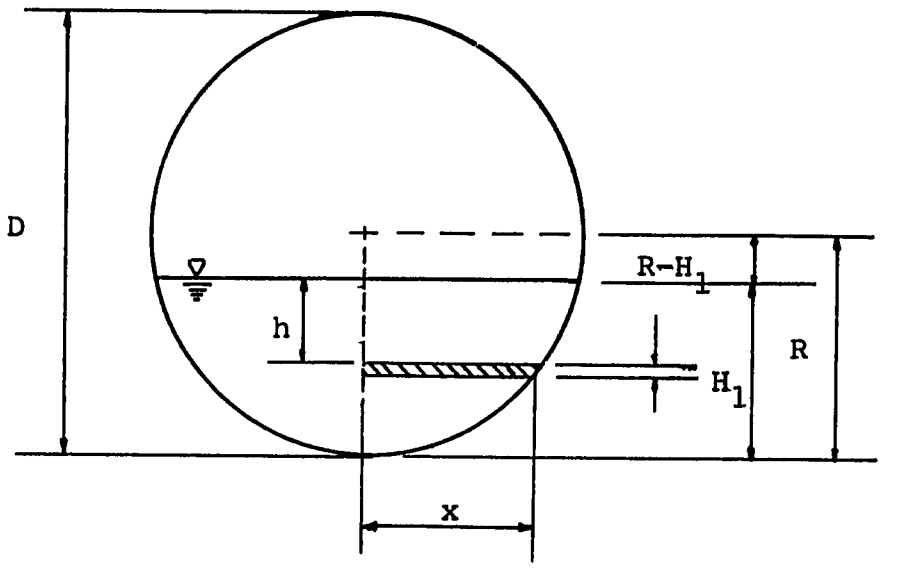

Fig. 3.1. Circular Weir

$$Q' = 2 \int_0^{H_1} \sqrt{2gh}\, X dh$$

Introducing the discharge coefficient, C_d as defined previously, the actual total discharge, Q, becomes

$$Q = 2C_d\sqrt{2g} \int_0^{H_1} X \sqrt{h}\, dh \tag{3-3}$$

where

$$X = [R^2 - (R - H_1 + h)^2]^{1/2} \tag{3-4}$$

and R is the radius of the opening.

Expanding Eq. 3-4,

$$X = [2R(H_1 - h) - (H_1 - h)^2]^{1/2}$$

Replacing R with $D/2$, where D is the diameter of the opening, yields

$$X = [D(H_1 - h) - (H_1 - h)^2]^{1/2} \tag{3-5}$$

Combining Eq. 3-3 and 3-5, the discharge becomes

$$Q = 2C_d \sqrt{2g} \int_0^{H_1} \sqrt{h}\, \sqrt{D(H_1 - h) - (H_1 - h)^2}\, dh \tag{3-6}$$

Let

$$H_1 - h = u$$

Then

$$du = -dh$$

and

$$u = H_1 \qquad \text{when} \quad h = 0$$

$$u = 0 \qquad \text{when} \quad h = H_1$$

Equation 3-6 becomes

$$Q = 2C_d \sqrt{2g} \int_H \sqrt{H_1 - u} \sqrt{Du - u^2} (-du)$$

or,

$$Q = 2C_d \sqrt{2g} \int_0^H \sqrt{H_1 - u} \sqrt{Du - u^2} du \qquad (3\text{-}7)$$

In order to apply the binomial expansion, the first expression under the integral is written

$$\sqrt{H_1 - u} = \sqrt{H_1} \sqrt{1 - u/H_1}$$

This meets the criterion of $X^2 < 1$, because $0 < u < H_1$ and so $(u/H_1)^2 < 1$. Thus,

$$\sqrt{H_1 - u} = \sqrt{H_1} \left[1 - \frac{1}{2}\frac{u}{H_1} - \frac{1}{8}\left(\frac{u}{H_1}\right)^2 - \frac{1}{16}\left(\frac{u}{H_1}\right)^3 - \frac{5}{128}\left(\frac{u}{H_1}\right)^4 - \ldots\ldots\right] \qquad (3\text{-}8)$$

By a similar manipulation, the second expression under the integral becomes

$$\sqrt{Du - u^2} = \sqrt{Du} \left[1 - \frac{1}{2}\frac{u}{D} - \frac{1}{8}\left(\frac{u}{D}\right)^2 - \frac{1}{16}\left(\frac{u}{D}\right)^3 - \frac{5}{128}\left(\frac{u}{D}\right)^4 - \ldots\ldots\right] \qquad (3\text{-}9)$$

The expression under the integral now becomes

$$\sqrt{H_1 - u}\,\sqrt{Du - u^2} \doteq \sqrt{DH_1 u}\,\Big[1 - \frac{u}{2}\Big(\frac{1}{H_1} + \frac{1}{D}\Big)$$

$$\frac{u^2}{8}\,\frac{(D-H_1)^2}{H_1^{\,2}D^2}$$

$$-\frac{u^3}{16}\,\frac{D^3-H_1D^2-DH_1^{\,2}+H_1^{\,3}}{H_1^{\,3}D^3}$$

$$-\frac{u^4}{32}\,\frac{\frac{5}{4}D^4-H_1D^3-\frac{1}{2}H_1^{\,2}D^2-DH_1^{\,3}+\frac{5}{4}H_1^{\,4}}{H_1^{\,4}D^4}$$

$$-\frac{u^5}{128}\,\frac{\frac{7}{2}D^5-\frac{5}{2}H_1D^4-H_1^{\,2}D^3-H_1^{\,3}D^2-\frac{5}{2}H_1^{\,4}D+\frac{7}{2}H_1^{\,5}}{H_1^{\,5}D^5}$$

When integrated term by term, Eq. 3-7 results in

$$Q = 2\sqrt{2g}\,C_d\,\sqrt{D}\,\Big[\frac{2}{3}H_1^{\,2} - \frac{H_1^{\,2}}{5}\Big(1 + \frac{H_1}{D}\Big) - \frac{H_1^{\,2}}{28}\Big(1 - 2\frac{H_1}{D} + \frac{H_1^{\,2}}{D}\Big) - \frac{H_1^{\,2}}{72}\Big(1 - \frac{H_1}{D} - \frac{H_1^{\,2}}{D} + \frac{H_1^{\,3}}{D}\Big) - \frac{H_1^{\,2}}{176}\Big(\frac{5}{4} - \frac{H_1}{D} - \frac{1}{2}\frac{H_1^{\,2}}{D^2} - \frac{H_1^{\,3}}{D^3}\Big) - \ldots\Big]$$

There is a common term, $H_1^{\,2}$, in the above equation. It can thus be written in an infinite series in the variable H_1/D,

$$Q = \sqrt{2g}\, C_d \sqrt{D}\, H_1^{\,2} \left[0.802 - 0.206 \left(\frac{H_1}{D}\right) - 0.033 \left(\frac{H_1}{D}\right)^2 - 0.012 \left(\frac{H_1}{D}\right)^3 - \ldots\ldots\right] \qquad (3\text{-}10)$$

One can now write

$$Q = C_d \sqrt{2gD}\, H_1^{\,2} PL' \left(\frac{H_1}{D}\right) \qquad (3\text{-}11)$$

where

$$PL' \left(\frac{H_1}{D}\right) = \left[0.802 - 0.206 \left(\frac{H_1}{D}\right) - 0.033 \left(\frac{H_1}{D}\right)^2 - 0.012 \left(\frac{H_1}{D}\right)^3\right]$$

The polynomial function $PL'\left(\frac{H_1}{D}\right)$ is a convergent infinite series, of which the value cannot be exactly determined. However, a special case can indicate the error between the infinite series and the polynomial function with finite terms. The special case is that when $H = R$, or when the weir is half full. Equation 3-3 can then be integrated by means of the definite integral, Eq. 3-2. In this case

$$X = \sqrt{R^2 - h^2}$$

so that Eq. 3-3 becomes

$$Q = 2\, C_d \sqrt{2g} \int_0^R \sqrt{h}\, \sqrt{(R^2 - h^2)}\, dh \qquad (3\text{-}12)$$

Comparing Eq. 3-12 with Eq. 3-2, it is apparent that $m = 1/2$, $n = 1$, and the following results,

$$Q = 2C_d\sqrt{2g}\ [\tfrac{1}{2}R^{1+1+1/2}\ \frac{\Gamma(\frac{\frac{1}{2}+1}{2})\,\Gamma(\frac{1+2}{2})}{\Gamma(\frac{1+\frac{1}{2}+3}{2})}]$$

or

$$Q = C_d\sqrt{2g}\ R^{5/2}\ \frac{\Gamma(\frac{3}{4})\,\Gamma(\frac{3}{2})}{\Gamma(\frac{9}{4})} \qquad (3\text{-}13)$$

The values of the three gamma functions can be obtained from mathematical table (7), and Eq. 3-13 becomes

$$Q = 0.9585\ C_d\sqrt{2g}\ R^{5/2} \qquad (3\text{-}14)$$

On the other hand, Eq. 3-11, the general equation for a circular weir, under the special case of flowing half full is as follows.

$$Q = C_d\sqrt{2g}\ \sqrt{2R}\ R^2\ PL'\ (\tfrac{1}{2})$$

or

$$Q = C_d\sqrt{2g}\ R^{5/2}\ \sqrt{2}\ PL'\ (\tfrac{1}{2})$$

Thus,

$$Q = 0.9747\ C_d\sqrt{2g}\ R^{5/2} \qquad (3\text{-}15)$$

Comparing the coefficients in Eqs. 3-14 and 3-15, it is seen that the difference is 0.0162, which is about 1.7 percent. The finite polynomial $PL'(H_1/D)$ for the special case investigated thus compares closely with the exact solution of the same case. The error would be even less if more terms were used in the determination of $PL'(H_1/D)$. In

the calculations given here, Eqs. 3-8 and 3-9 were only expanded to the 8th degree.

Equation 3-11 can be rewritten by noting that $\sqrt{D}\, H_1^{\,2} = \sqrt{D^5}\, H_1^{\,2}/D^2$. Hence,

$$Q = C_d\, D^{5/2}\, PL\left(\frac{H_1}{D}\right) \tag{3-16}$$

where

$$PL\left(\frac{H_1}{D}\right) = \sqrt{2g}\left(\frac{H_1}{D}\right)^2 PL'\left(\frac{H_1}{D}\right)$$

$$= 112.28\left(\frac{H_1}{D}\right)^2 - 28.84\left(\frac{H_1}{D}\right)^3 - 4.62\left(\frac{H_1}{D}\right)^4$$

$$- 1.68\left(\frac{H_1}{D}\right)^5$$

and here $g = 9800$ mm/sec^2.

The curve of the above function, $PL(H_1/D)$, is plotted on Fig. 3.2. In addition, its values between $H_1/D = 0.1$ to $H_1/D = 0.89$ with an increment of 0.01 are shown in Table 1.

Equation 3-16 is the discharge equation of a circular weir with diameter D , neglecting the approach velocity. Because the end contractions in a circular weir cannot be properly defined, this circular weir equation does not explicitly include their effects. However, their effective is included in the discharge coefficient, C_d

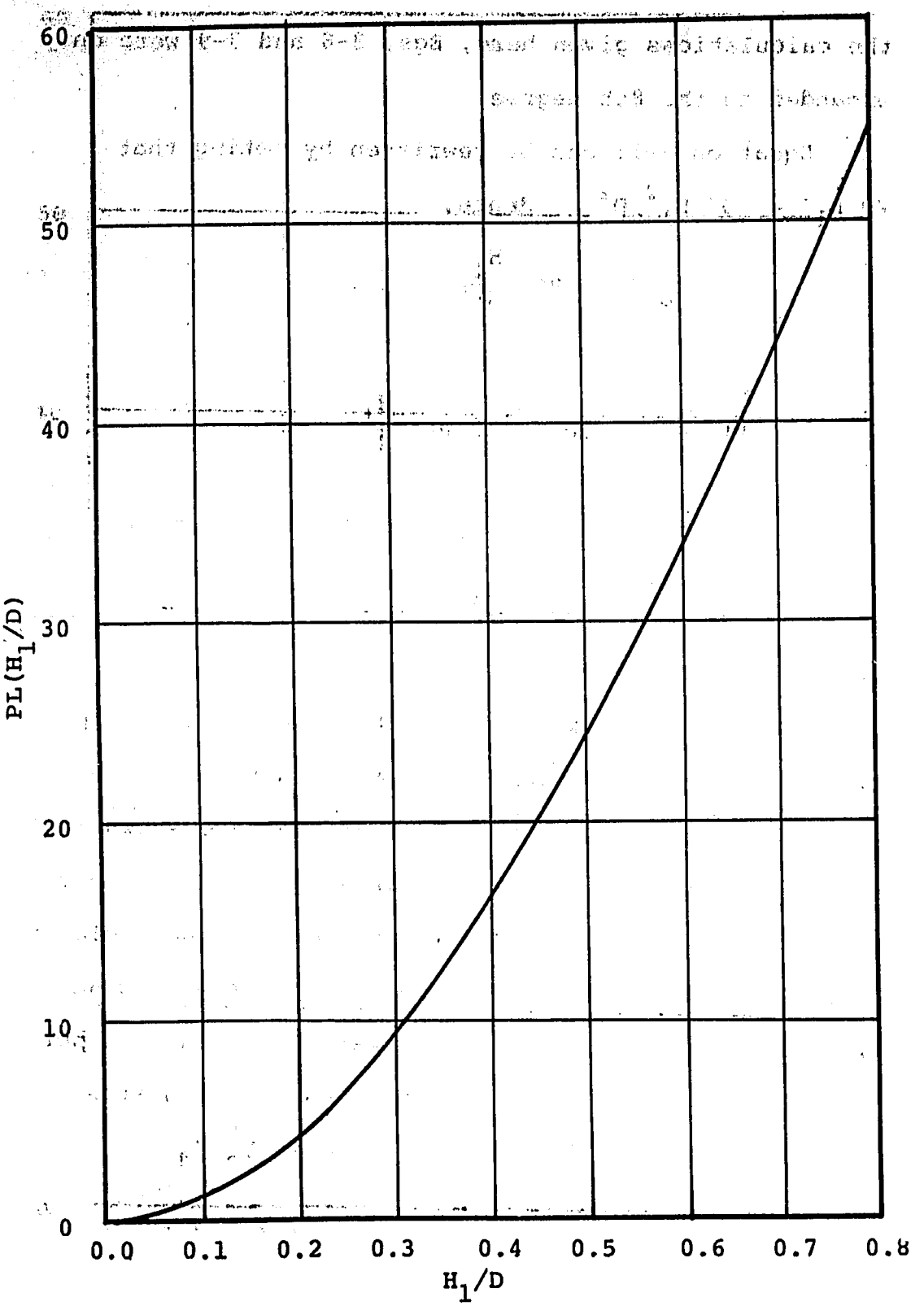

ig. 3.2. Curve of Function $PL(H_1/D) = 112.28 \left(\frac{H_1}{D}\right)^2 - 28.84 \left(\frac{H_1}{D}\right)^3 - 4.62 \left(\frac{H_1}{D}\right)^4 - 1.68 \left(\frac{H_1}{D}\right)^5$.

Table 1. Values of $PL(H_1/D) = 112.28(H_1/D)^2 - 28.84(H_1/D)^3 - 4.62(H_1/D)^4 - 1.68(H_1/D)^5$.

	0.00	0.01	0.02	0.03	0.04	0.05	0.06	0.07	0.08	0.09
0.1	1.09	1.32	1.57	1.83	2.12	2.43	2.75	3.10	3.46	3.85
0.2	4.25	4.67	5.12	5.57	6.05	6.55	7.06	7.59	8.14	8.70
0.3	9.29	9.88	10.50	11.13	11.78	12.44	13.12	13.81	14.52	15.24
0.4	15.98	16.74	17.50	18.28	19.08	19.89	20.71	21.54	22.39	23.25
0.5	24.12	25.01	25.90	26.81	27.73	28.66	29.60	30.55	31.51	32.48
0.6	33.46	34.45	35.45	36.46	37.47	38.50	39.53	40.57	41.62	42.67
0.7	43.73	44.80	45.87	46.95	48.04	49.13	50.23	51.33	52.43	53.54
0.8	54.65	55.77	56.88	58.01	59.13	60.25	61.38	62.51	63.64	64.77

CHAPTER IV

SUBMERGED WEIR FLOW ANALYSIS

A submerged weir frequently proves to be a useful and economical metering device in open channels where head can not be sacrificed. But in using a weir, the difficulties are to accurately predict the effects of submergence and to select the weir formula which is most likely to give reliable results. Because weir flow, either free or submerged, is a gravity phenomenon in which friction plays little part, dynamic similarity is governed by the Froude law. The dimensionless ratios H_2/H_1 and P/H_1 (Fig. 4.1) are also important.

In 1943, Vennard and Weston (8) compared the data of five hydraulic workers -- Francis, Fteley, Bazin, Cox and Cone -- and made graphs to show the possible relationships for submerged flow through vertical weirs. Vennard and Weston plotted the discharge ratio Q/Q_f (the ratio of the actual discharge to free flow discharge) against the submergence ratio H_2/H_1 for various values of P/H_1. It was found that all the data points with a constant value of P/H_1 fell on one curve and for different value of P/H_1, the curves changed. This implied that

$$Q/Q_f = f(H_2/H_1, P/H_1)$$

Later, Villemonte (1) obtained more valuable results by assuming that the net flow over the weir is the difference

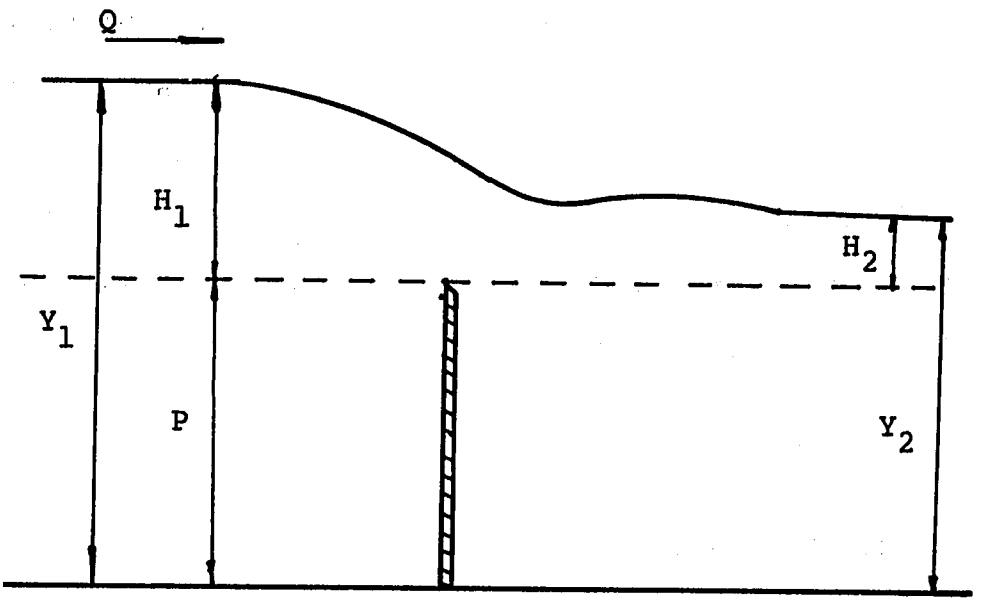

Fig. 4.1. Submerged Weir

between the free-flow discharge due to H_1 and the free-flow discharge due to H_2. Then,

$$Q = Q_1 - Q_2 \tag{4-1}$$

where Q is the net flow over the weir, Q_1 is the flow due to the head H_1 and Q_2 is the flow due to the head H_2. This assumption implies that the head, H_2, does not directly affect the flow of water due to H_1 and likewise, that head, H_1, does not prohibit counterflow due to H_2. This approach is equivalent to an application of the principle of superposition which is frequently used in evaluating the combined effect of several independent conditions. Dividing through by Q_1, Eq. 4-1 becomes

$$Q/Q_1 = 1 - Q_2/Q_1 \tag{4-2}$$

Equation 4-2 should not be espected to give a quantitative relation for determining Q since interaction and other perturbing influences have been entirely neglected. The experimental tests Villemonte did showed that Q/Q_1 was related functionally to $1 - Q_2/Q_1$ but that the appropriate function was not the simple linear one of Eq. 4-2. This relation may be expressed in the form

$$Q/Q_1 = f(1 - Q_2/Q_1) = K(1 - Q_2/Q_1)^m \tag{4-3}$$

or, since

$$Q_1 = C_1 H_1^{n_1} \quad \text{and} \quad Q_2 = C_2 H_2^{n_2}$$

then,

$$Q/Q_1 = K(1 - C_2H_2^{n_2}/C_1H_1^{n_1})^m \tag{4-4}$$

where K and m are constants and are determined from data and the C's and n's are the coefficients and exponents that appear in the free-flow discharge equation (such as Eq. 2-10, or Eq. 3-11). For an ideal weir of identical upstream and downstream conditions, the coefficients, C_1 and C_2, and the exponents, n_1 and n_2, should be equal. Then, Eq. 4-4 reduces to

$$Q/Q_1 = K(1 - S^n)^m \tag{4-5}$$

where S = the submergence ratio, H_2/H_1. The constant K and the exponent m, which account for the interaction effects, were determined separately for each weir type but only the arithmetic average of the K's and the m's were reported. The values given were K equal to 1.00 and m equal to 0.385 for a practical submergence range of 0 to 0.90. Thus the general discharge equation for all sharp-crested weirs expressed by continuous single-valued functions is

$$Q = Q_f\ (1 - S^n)^{0.385} \tag{4-6}$$

In this study, the submerged weir problem is analyzed by Villemonte's method. First the free-flow equation is determined by using the standard weir formulas. For the rectangular gate, Eq. 2-10 is employed. For the circular

gate, Eq. 3-11 is used. The 45 degree inclination is neglected at this moment, allowing comparison with the vertical weir data referred to by Villemonte. More precisely, the exponents for both circular or rectangular weirs are assumed to be the same values as in the standard weir equations, or $n = 1.5$ for a rectangular gate and $n = 2$ for a circular gate. Attention should be paid to the fact that the circular gate equation employed in the study is Eq. 3-11 rather than the general Eq. 3-16. The former was chosen because the general Eq. 3-16 does not show the desired exponent n which is needed in the submerged weir flow equation. It is also noted that truly free flow for weirs were not obtained in this experiment as explained in Chapter VI.

Figure 4.2 shows three different possible weir flow types. In Fig. 4.2.a, true free flow conditions are shown. This indicates that the water level in the downstream channel is sufficiently below the crest to allow free access of air to the area beneath the nappe. Sometimes an air vent is needed to assure a free access of air to the area beneath the nappe. Figure 4.2.b and Figure 4.2.c show the two possible submerged weir flow conditions, the surface nappe and plunging nappe. The former occurs at high submergence ratios, and the latter at low submergence ratios. The surface nappe remains on the water surface; all stream paths are directed downstream and standing waves are developed. The plunging nappe plunges beneath the water surface and rises to the surface at a point downstream where some stream paths are directed upstream.

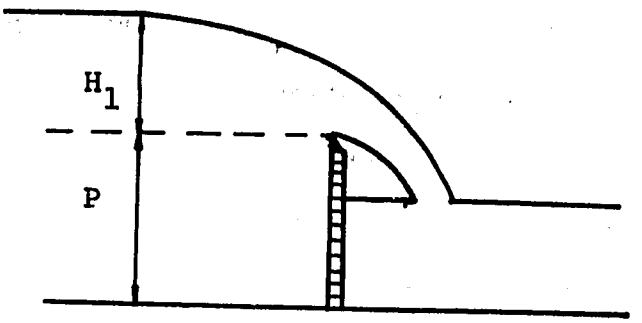

a. Free flow

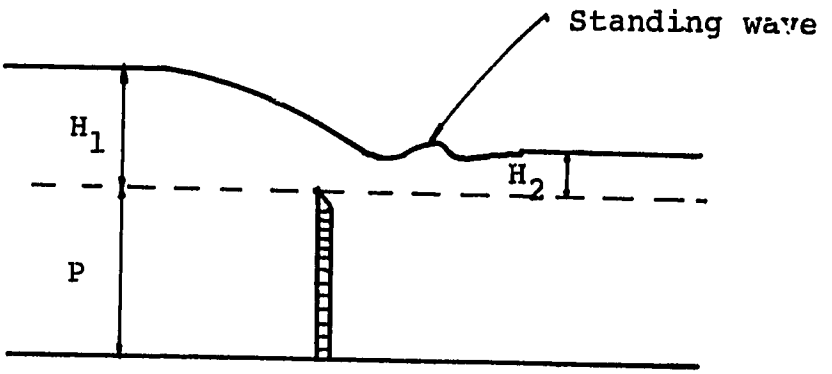

b. Surface nappe

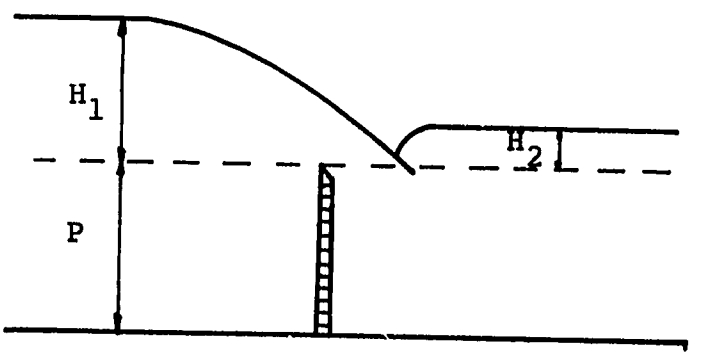

c. Plunging nappe

Fig. 4.2. Three Types of Weir Flow (After Vennard)

The transition from surface nappe to plunging nappe can be identified by a breaking of the standing wave crests similar in apprearance to a hydraulic jump. This implies that critical flow could occur when the plunging nappe is present. Actually critical flow does occur in the plunging nappe condition, and this will be discussed in Chapter VI. It is known that when critical flow occurs in the vicinity of a contraction in an open channel, the downstream water depth has no effect on the upstream water depth. Therefore, in the submerged weir problem, plunging nappe flow behaves as free flow, and data for plunging nappe flow were used to calibrate the free flow equation.

CHAPTER V

EXPERIMENTAL FACILITIES AND GATE GEOMETRIES

The data for this study were collected using a test channel located in the Hydraulics Laboratory of the Engineering Research Center at Colorado State University, Fort Collins, Colorado. The test channel is 1.83 m wide, 1.22 m deep and 18.29 m long. In this experiment, the 1.83 m wide channel is divided by a partition into two subchannels; one with a width of 1.22 m, the other with a width of 0.61 m, and the gate is installed in the 0.61 m wide subchannel (Fig. 5.1). The test channel has a zero slope. The water is supplied from a sump located under the Engineering Research Center building and is circulated by a propeller pump which gives a maximum capacity of 156 liters per second.

The water is transported from the pump to the head of the test channel by a 0.30 m diameter pipeline which is located along the floor of the laboratory. A 0.25 m diameter orifice is set in the pipeline, and the discharge can be determined from the rating curve of the orifice,

$$Q = 5.73 \sqrt{H}$$

where Q is the discharge in liters per second and H is the differential head on the orifice, in mm. The upstream and downstream heads are read from manometers attached near the upstream and downstream faces of the orifice.

The water is very turbulent when it emerges from the head sump, and this could cause large fluctuations in flow

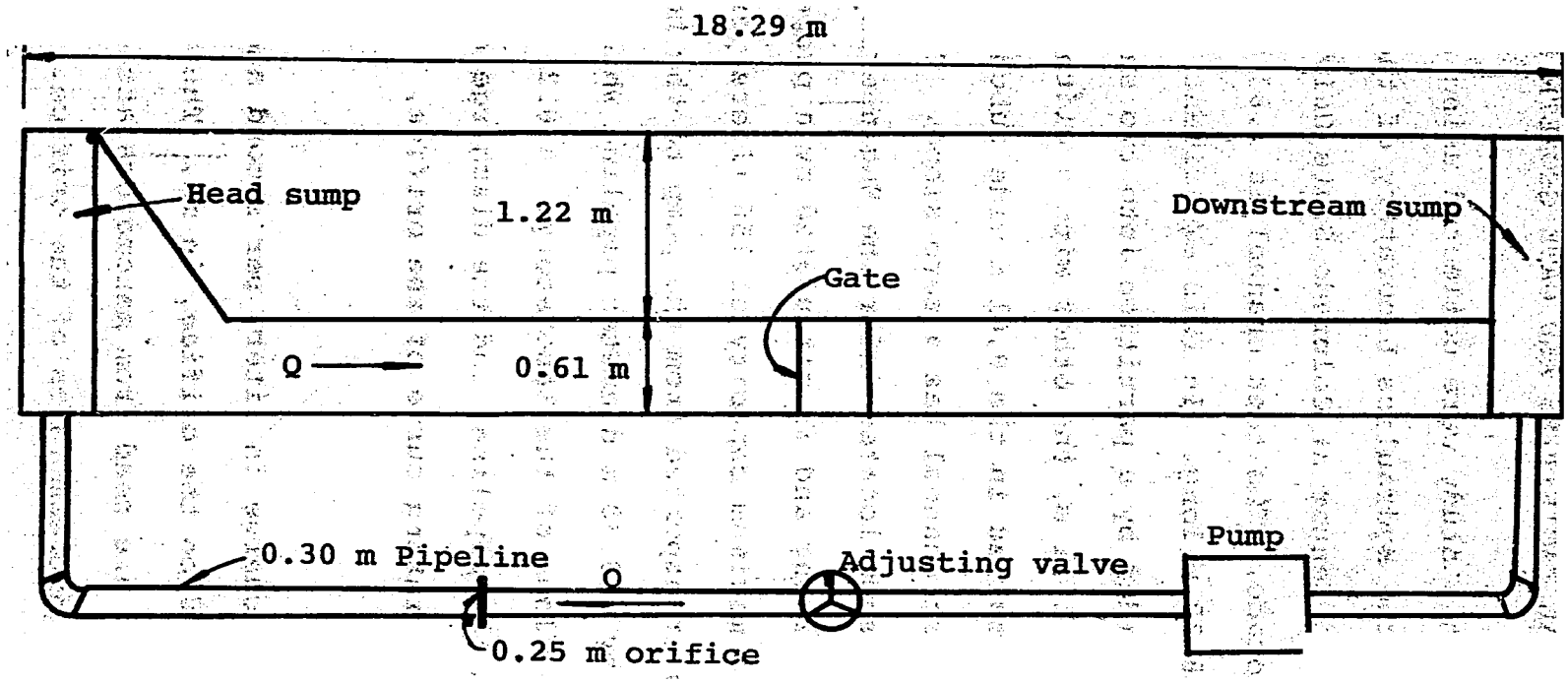

Fig. 5.1. Plan View of Experimental Facilities

depth throughout the length of the channel. This turbulence is removed by installing a damper at the entrance of the subchannel. There is also a damper installed at the downstream sump of the test channel to prevent possible vortex flow or turbulence from occurring.

As the stream passes over the weir, the top surface curves downward. This drawdown extends upstream from the weir notch. The upstream head, H_1, must be measured at a point on the water surface in the channel at a distance beyond which any significant drawdown occurs. This distance is at least four times the maximum head on the weir (6). Four manometers are placed upstream from the gate at distances of 0.30, 1.22, 2.44, and 4.88 m. As the water passes through the constriction, the contracted stream reaches a minimum width which corresponds to the vena contracta in orifice flow. Beyond the vena contracta, the live stream expands until it reaches downstream where the water surface is undisturbed. The downstream undisturbed water depth is taken as the downstream head H_2. Seven manometers are placed downstream to determine the undisturbed flow range. They are located downstream from the gate at distances of 1.30, 1.32, 1.37, 1.83, 3.35, 4.88, and 5.49 m. The four upstream manometers are tapped 0.08 m above the bottom of the channel, and the seven downstream manometers are tapped 0.03 m above the bottom of the channel. The water level in the eleven manometers could be read to an accuracy of 2.54 mm (0.1 inch), the water level in the manometers of the orifice could be

read to an accuracy of 3.05 mm (0.12 inch). The discharge can be varied by adjusting the valve on the pipe line.

The crest height, P, of the inclined gates is illustrated by Fig. 5.2. The configuration and dimensions of the four gates are illustrated by Fig. 5.3 and Table 2. The particular gates investigated were chosen to be geometrically similar gates used in the field.

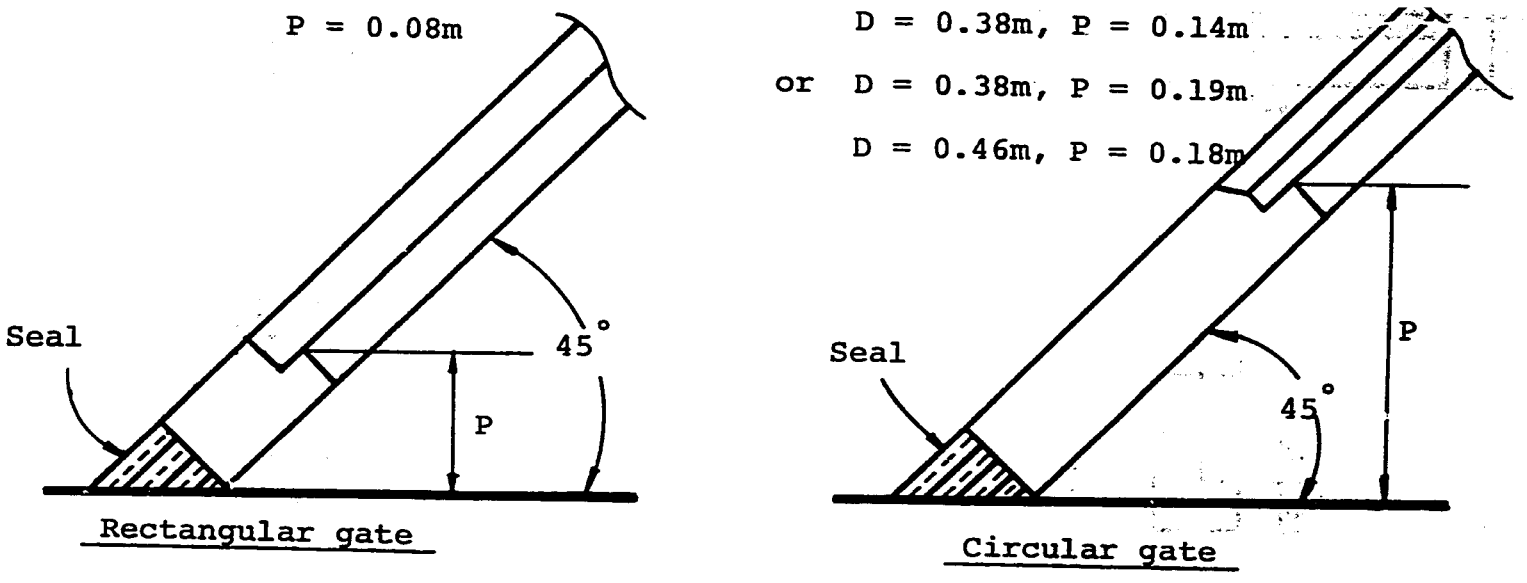

Fig. 5.2. Illustration of Crest Height for Inclined Gate

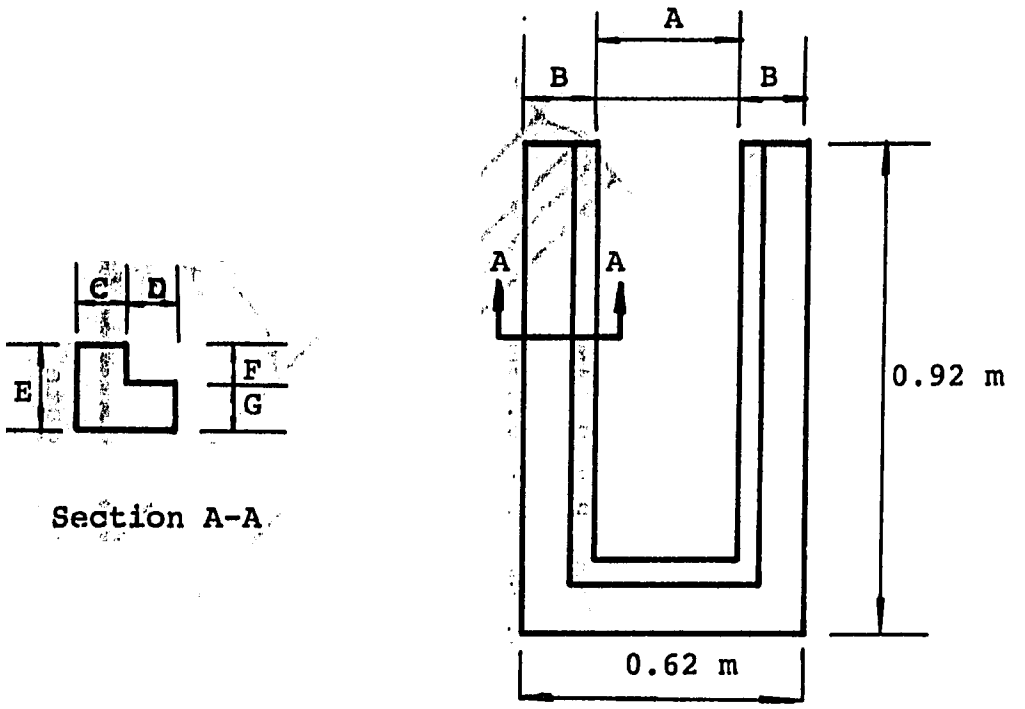

Rectangular gate

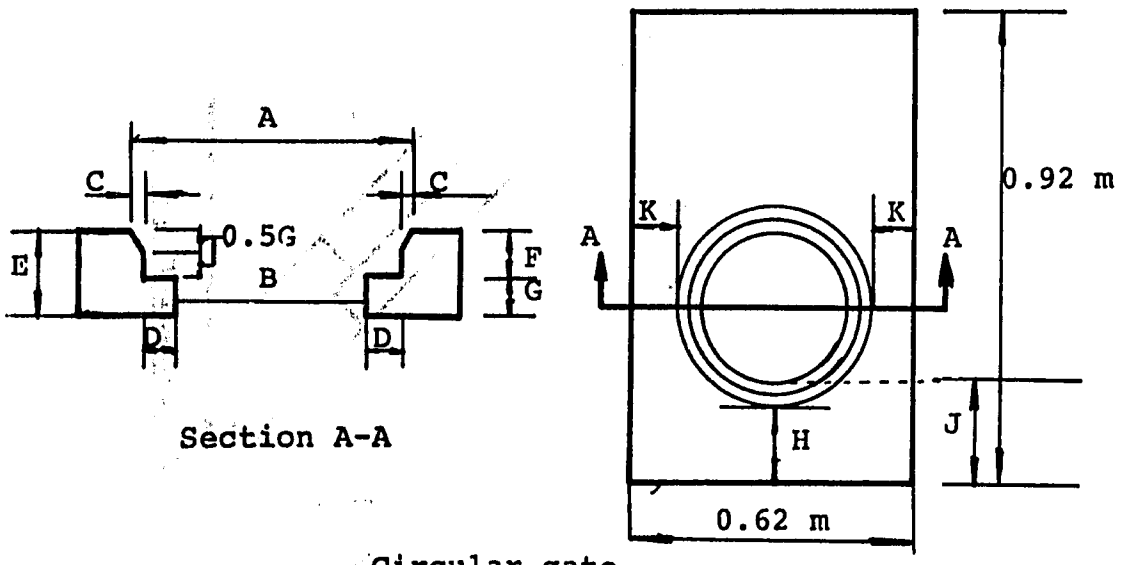

Circular gate

Fig. 5.3, Configurations of Gates

Table 2. Dimensions of Test Gates, All Variables Refer to Fig. 5.3.

	RECTANGULAR P = 0.08 m	CIRCULAR D = 0.38 m, P = 0.14 m	CIRCULAR D = 0.38 m, P = 0.19 m	CIRCULAR D = 0.46 m, P = 0.18 m
A	0.46 m	0.48 m	0.48 m	0.56 m
B	0.08 m	0.38 m	0.38 m	0.46 m
C	0.05 m	0.02 m	0.02 m	0.02 m
D	0.03 m	0.03 m	0.03 m	0.03 m
E	0.08 m	0.08 m	0.08 m	0.08 m
F	0.04 m	0.04 m	0.04 m	0.04 m
G	0.04 m	0.04 m	0.04 m	0.04 m
H		0.10 m	0.18 m	0.16 m
J		0.15 m	0.23 m	0.21 m
K		0.07 m	0.07 m	0.03 m

CHAPTER VI

RESULTS AND DISCUSSION

RESULTS

Since the equations for rectangular and circular weirs have been determined, the main purpose is to find a dimensionless relation for the discharge coefficient C_d , which can then be applied to an gates with different dimensions so long as they are geometrically similar. For the rectangular gate, weir flow only exists, either submerged or free. For the circular gates, both the weir flow and orifice flow, which could be submerged or free in each condition, should be considered. Dimensional analysis was employed to help find the relationship between possible dimensionless factors, such as the submergence ratio, S , the Froude number, F , etc., and the dimensionless discharge coefficient, C_d

DIMENSIONAL ANALYSIS

In general, the important variables that can influence fluid motion are the following: (1) the several linear dimensions fully defining the geometrical boundary conditions-- L_1 , L_2 , L_3 , L_4 , etc., which might be the crest height, the width of the weir notch, the width of the approach channel or the water depth of the flow; (2) Kinematic and kynamic characteristics of flow -- a mean velocity V (or a discharge Q), and a pressure increment Δp (or a resisting force, or an intensity of shear); and, (3) the fluid properties of density, ρ , specific weight, γ , viscosity, μ , surface tension, σ ,

and elastic modulus, ε . Application of the Π theorem gave the following relationship between the discharge coefficient, C_d , and dimensionless parameters (9),

$$C_d = f(L_1/L_2 \ , \ L_1/L_3 \ , \ L_1/L_4 \ , \ F \ , \ R_e \ , \ W \ , \ C)$$

where L_1/L_2, L_1/L_3, L_1/L_4 are some linear dimension ratios, one of which might be a submergence ratio S , H_2/H_1 , F is the Froude number, and $F = (V^2/L_1)/(\gamma/\Delta p)$; R_e is the Reynolds number, and $R_e = (VL_1)/(\mu/\Delta p)$; W is the Weber number, and $W = (V^2L_1)/(\sigma/\Delta p)$; and C is the Cauchy number and $C = V^2/(\varepsilon/\Delta p)$.

In open channel flow, friction force plays little part compared with gravity, and hence the Reynolds number, R_e , is not important. Water is considered an imcompressible fluid, and its density does not change appreciably in the test; therefore, the Cauchy number, C , is neglected. The Weber number, W , is important only when the molecular attraction, which gives rise to the liquid properties of cohesion and adhesion, plays a primary role in a fluid problem. The most common case of such a problem is the capillary rise of liquid in a tube. In an open channel fluid problem, the molecular attraction usually has little influence on the flow. In weir studies cohesive forces would be significant if the nappe tend to cling to the weir surface. This condition did not occur in these studies and so the Weber number could be eliminated. The Froude number, which reflects gravity forces, has no effect on the discharge coefficient over the range of flows

investigated here. Thus, the discharge coefficients of the weir and orifice are functions of linear dimension ratios only.

WEIR PERFORMANCE -- FREE FLOW

As mentioned before, the C_d of a free-flow weir was calibrated by using the data collected at a plunging nappe condition. For the rectangular weir, the free flow discharge coefficient C_{df} was calculated by Eq. 2-10, and

$$C_{df} = Q/(L\sqrt{2g}\ H_1^{3/2})$$

where Q is the observed discharge at the upstream head equal to H_1. Similarly, C_{df} of a circular weir was calculated by Eq. 3-11, and

$$C_{df} = Q/[\sqrt{2gD}\ H_1^2 PL'(\frac{H_1}{D})]$$

or

$$C_{df} = Q/[\sqrt{D}\ H_1^2 PL(\frac{H_1}{D})]$$

where $PL(\frac{H_1}{D})$ is the polynomial function derived in Chapter IV.

After several different linear dimension ratio had been tried, it was found that C_{df} for the rectangular gate was constant, 0.481 , but C_{df} for the other three circular weirs had a linear relationship with H_1/P (Fig. 6.1). The free flow equation for the rectangular gate with a crest height of 0.08 m hence is

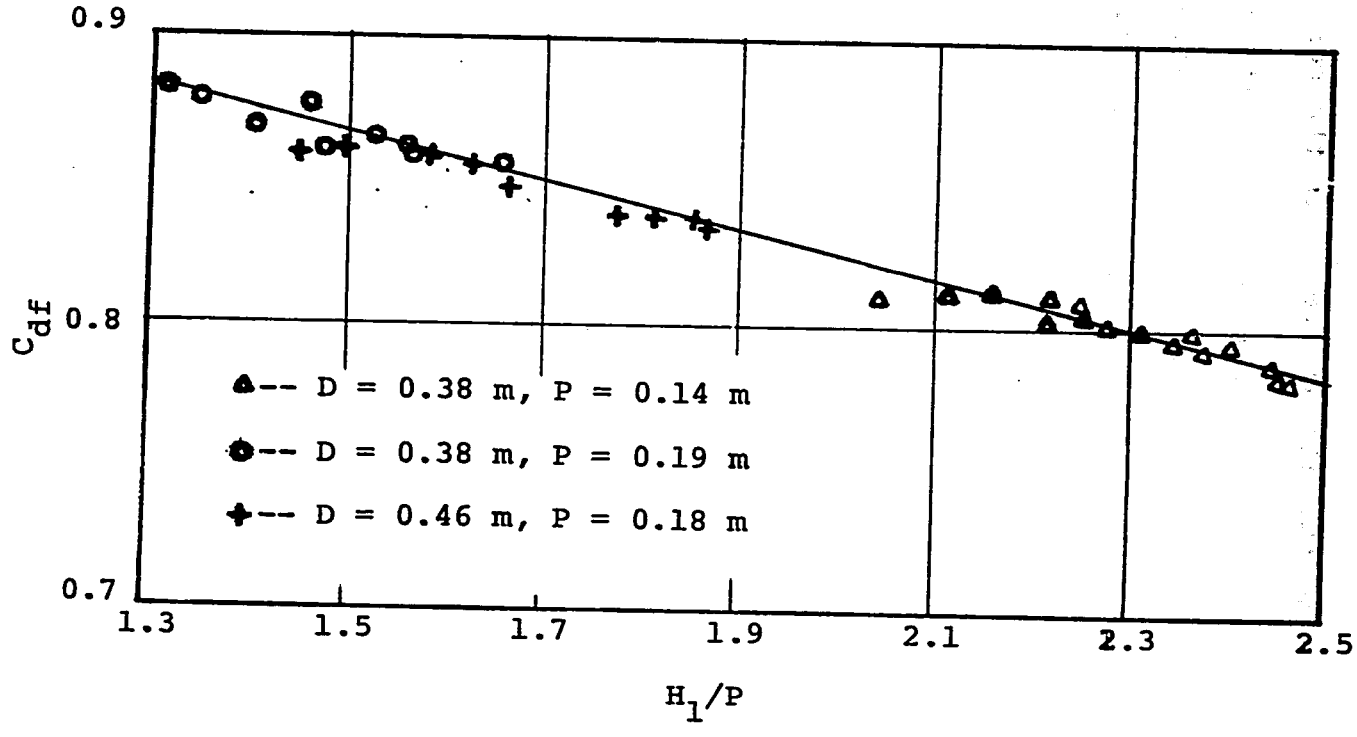

Fig. 6.1. Free Flow Discharge Coefficient, C_{df}, for Circular Gates; As a Function of Ratio of Upstream Head to Crest Height, H_1/P. $C_{df} = 0.090 - 0.080\ (H_1/P)$, Correlation Coefficient $r^2 = 0.973$.

$$Q_f = 0.481\ L\sqrt{2g}\ H_1^{3/2} \times 10^{-6} \qquad (6\text{-}1)$$

where Q_f is in liters per second, L and H_1 are in mm, g equals 9800 mm/sec^2 and the number 10^{-6} is the conversion factor from cubic millimeters per second to liters per second. The same dimensions are used throughout this report.

The unique relation for the three circular gates between C_{df} and H_1/P is

$$C_{df} = 0.990 - 0.080\ H_1/P \qquad (6\text{-}2)$$

and hence,

$$Q_f = (0.990 - 0.080\ H_1/P)\ D^{5/2}\ PL(H_1/D) \times 10^{-6} \qquad (6\text{-}3)$$

Equation 6-1 is the discharge equation for the rectangular gate when plunging nappe flow takes place. Equation 6-3 is the discharge equation for the three circular gates, provided a plunging nappe occurs.

WEIR PERFORMANCE -- SUBMERGED FLOW

After the discharge equations for free flow were determined, the discharge equations for submerged flow could be calculated by the method illustrated in Chapter IV.

The submerged discharge coefficient C_{ds} is the ratio of the submerged discharge to the discharge calculated from the free flow equation using the same head, H_1. Therefore, for the rectangular gate, C_{ds} could be expressed as:

$$C_{ds} = Q/(C_{df}\ L\sqrt{2g}\ H_1^{3/2}) \tag{6-4}$$

and for circular gates,

$$C_{ds} = Q/[C_{df}\sqrt{D^5}\ PL(H_1/D)] \tag{6-5}$$

In Eq. 6-4 and 6-5, Q is the observed value of discharge, and C_{df} is that determined previously. The values of C_{ds} then were plotted against the values of $(1 - S^n)$ on logarithmic paper with C_{ds} as the ordinate and $(1 - S^n)$ as the abscissa (Figs. 6.2, 6.3, 6.4, and 6.5). The symbol S has the same meaning, H_2/H_1, as in Chapter IV. The value of n is 3/2 for rectangular gates and 2 for circular gates. As expected, for each single gate, a straight line resulted from plotting the data. The equations for the four straight lines are as follows:

For the rectangular gate with a crest height of 0.08 m (Fig. 6.2),

$$C_{ds} = 2.069\ (1 - S^{3/2})^{0.393} \tag{6-6}$$

For the 0.38 m diameter gate with a crest height of 0.14 m (Fig. 6.3),

$$C_{ds} = 1.128\ (1 - S^2)^{0.385} \tag{6-7}$$

For the 0.38 m diameter gate with a crest height of 0.19 m (Fig. 6.4),

$$C_{ds} = 1.062\ (1 - S^2)^{0.378} \tag{6-8}$$

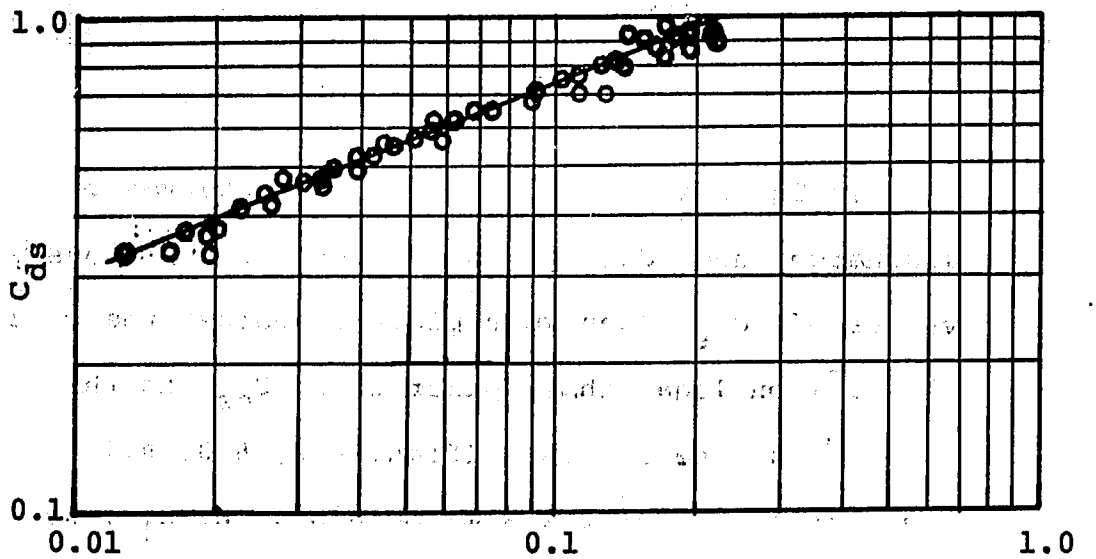

Fig. 6.2. Submerged Weir Flow Discharge Coefficient, C_{ds}, for Rectangular Gate with a Crest Height of 0.08 m; As a Function of $1 - S^{3/2}$, S is the Submergence Ratio. $C_{ds} = 2.069\ (1 - S^{3/2})^{0.393}$, Correlation Coefficient $r^2 = 0.987$.

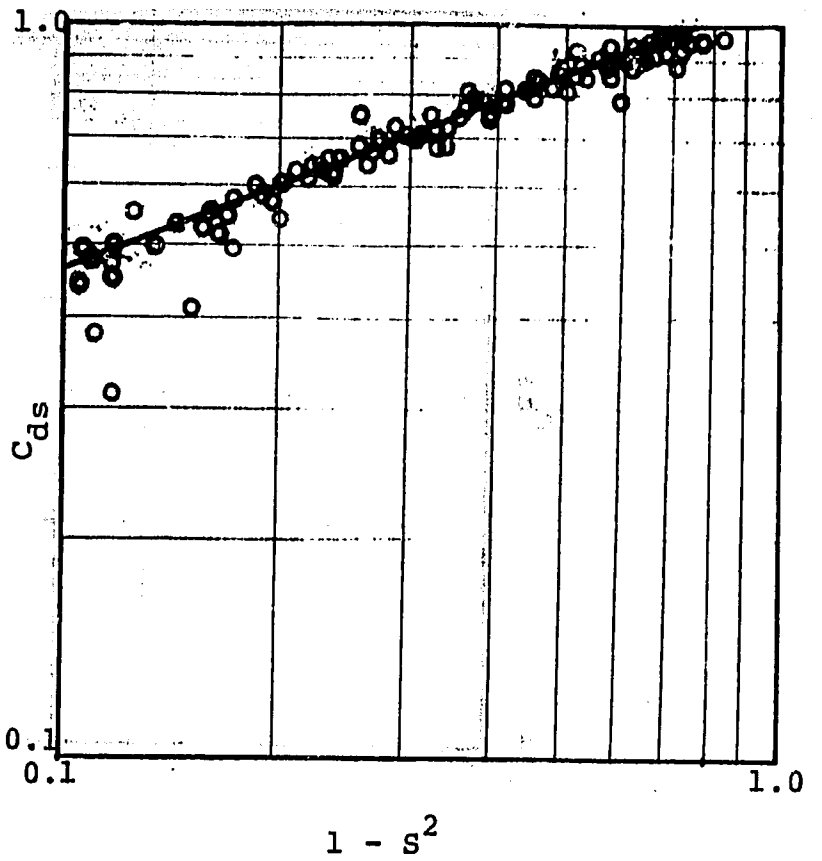

Fig. 6.3. Submerged Weir Flow Discharge Coefficient, C_{ds}, for 0.38 m Diameter Circular Gate with a Crest Height of 0.14 m; As a Function of $1 - S^2$, S is the Submergence Ratio. $C_{ds} = 1.128\ (1 - S^2)^{0.385}$, Correlation Coefficient $r^2 = 0.990$.

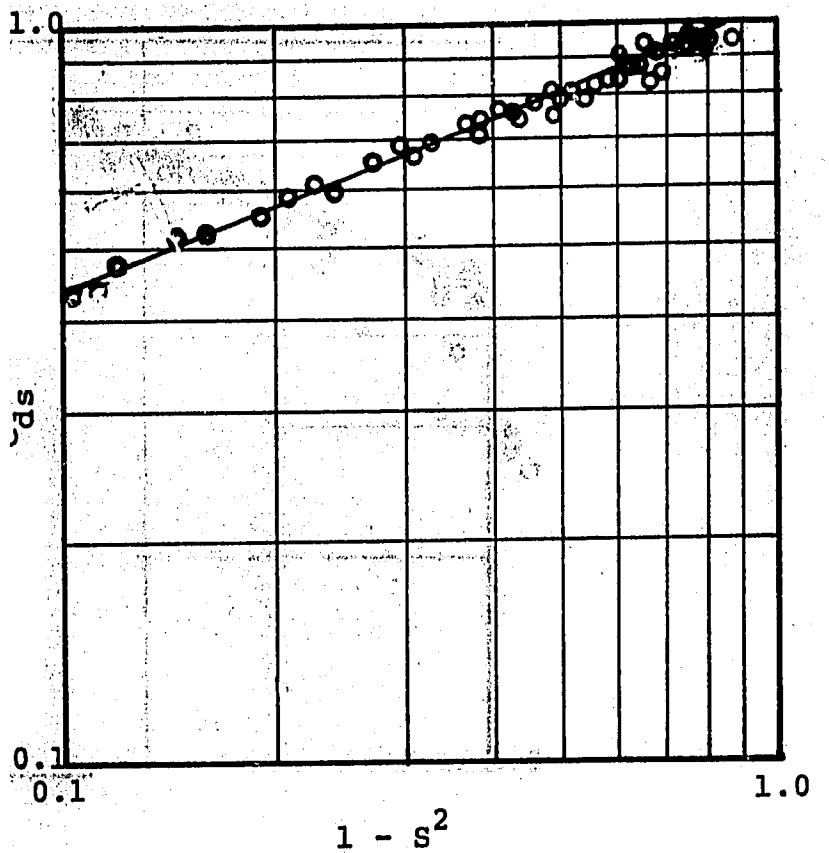

Fig. 6.4. Submerged Weir Flow Discharge Coefficient, C_{ds}, for 0.38 m Diameter Circular Gate with a Crest Height of 0.19 m; As a Function of $1 - S^2$, S is the Submergence Ratio. $C_{ds} = 1.062\ (1 - S^2)^{0.378}$ Correlation Coefficient $r^2 = 0.997$.

For the 0.46 m diameter gate with a crest height of 0.18 m (Fig. 6.5),

$$C_{ds} = 1.210\ (1 - S^2)^{0.392} \tag{6-9}$$

The submerged weir equations could be written as

$$Q_s = C_{ds} Q_f \tag{6-10}$$

where C_{ds} is as shown in Eqs. 6-6 , 7-6 , 6-8 , and 6-9, Q_f is as shown in Eqs. 6-1 , and 6-3. This completes the weir equations for free flow and submerged flow.

ORIFICE PERFORMANCE

The orifice flow rating curve is developed for the circular gates when the upstream water depth is above the top of the circular opening. Plotting the discharge, Q , against the head difference, H , between upstream head, H_1 , and downstream head, H_2 , with Q as the ordinate and H as the abscissa, the data points fall on a straight line when plotted on log-log paper. As a result, the discharge equations are:

For the 0.38 m diameter gate with a crest height of 0.14 m (Fig. 6.6),

$$Q = 13.6\ H^{0.477} \tag{6-11}$$

For the 0.38 m diameter gate with a crest height of 0.19 m (Fig. 6.7),

$$Q = 13.3\ H^{0.477} \tag{6-12}$$

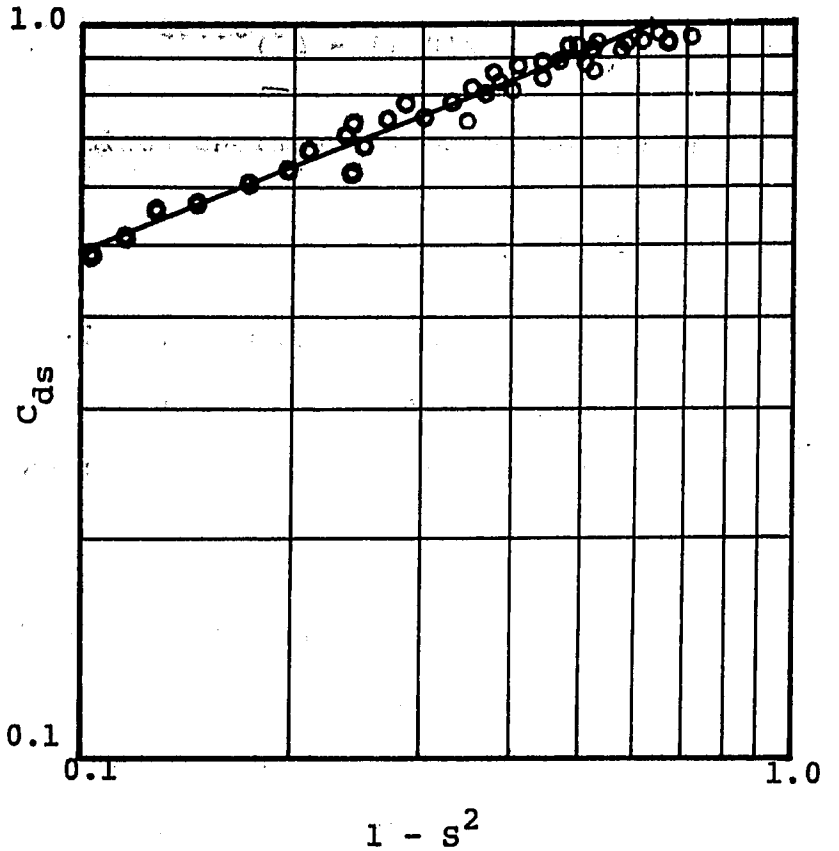

Fig. 6.5. Submerged Weir Flow Discharge Coefficient, C_{ds}, for 0.46 m Diameter Circular Gate with a Crest Height of 0.18 m; As a Function of $1 - S^2$, S is the Submergence Ratio, $C_{ds} = 1.210\ (1 - S^2)^{0.392}$, Correlation Coefficient $r^2 = 0.993$

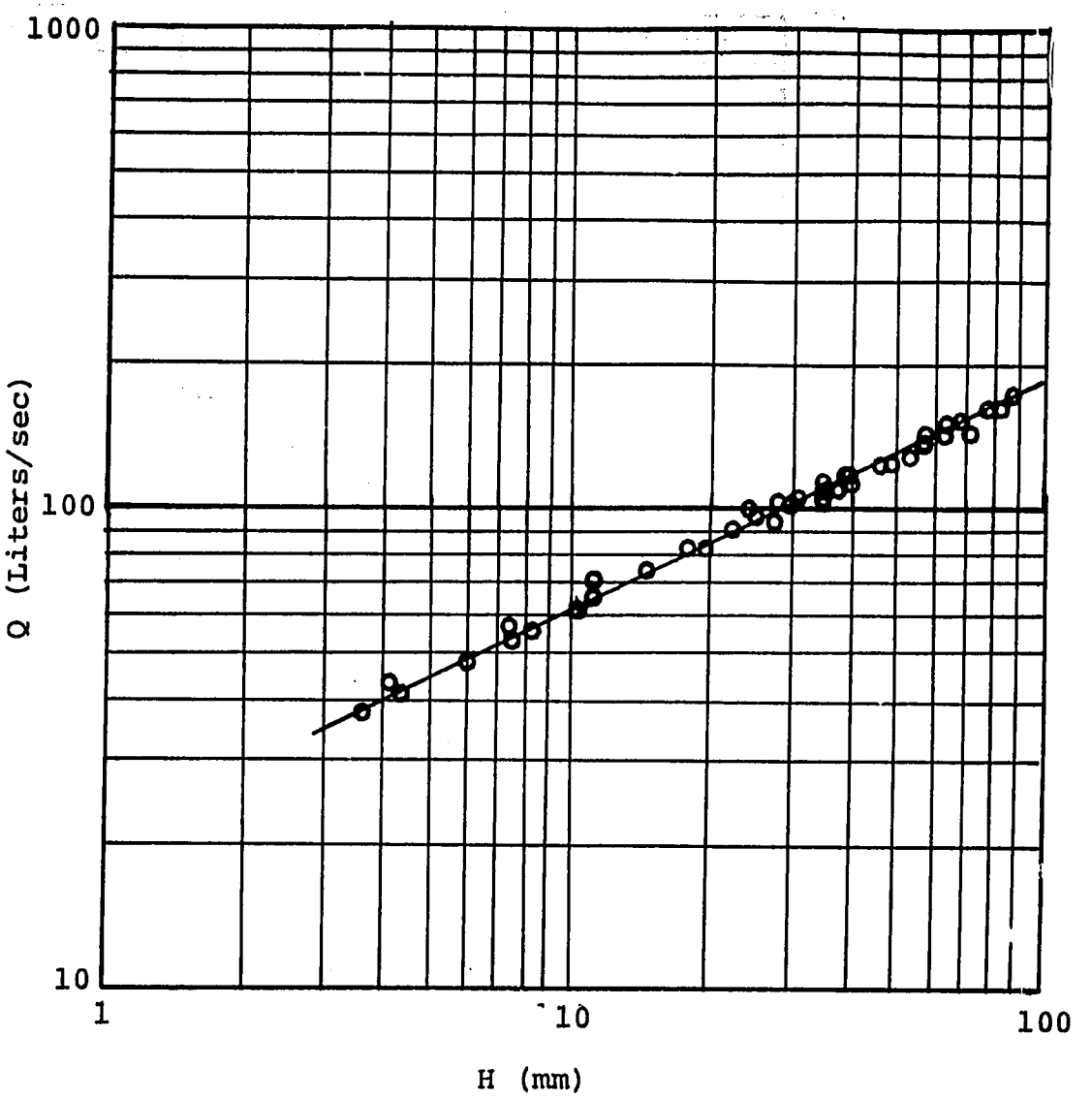

Fig. 6.6. Submerged Orifice Flow Discharge, Q, for the 0.38 m Diameter Circular Gate with a Crest Height of 0.14 m; As a Function of Head Difference, H $(H_1 - H_2)$, $Q = 13.6\ H^{0.477}$, Correlation Coefficient $r^2 = 0.992$

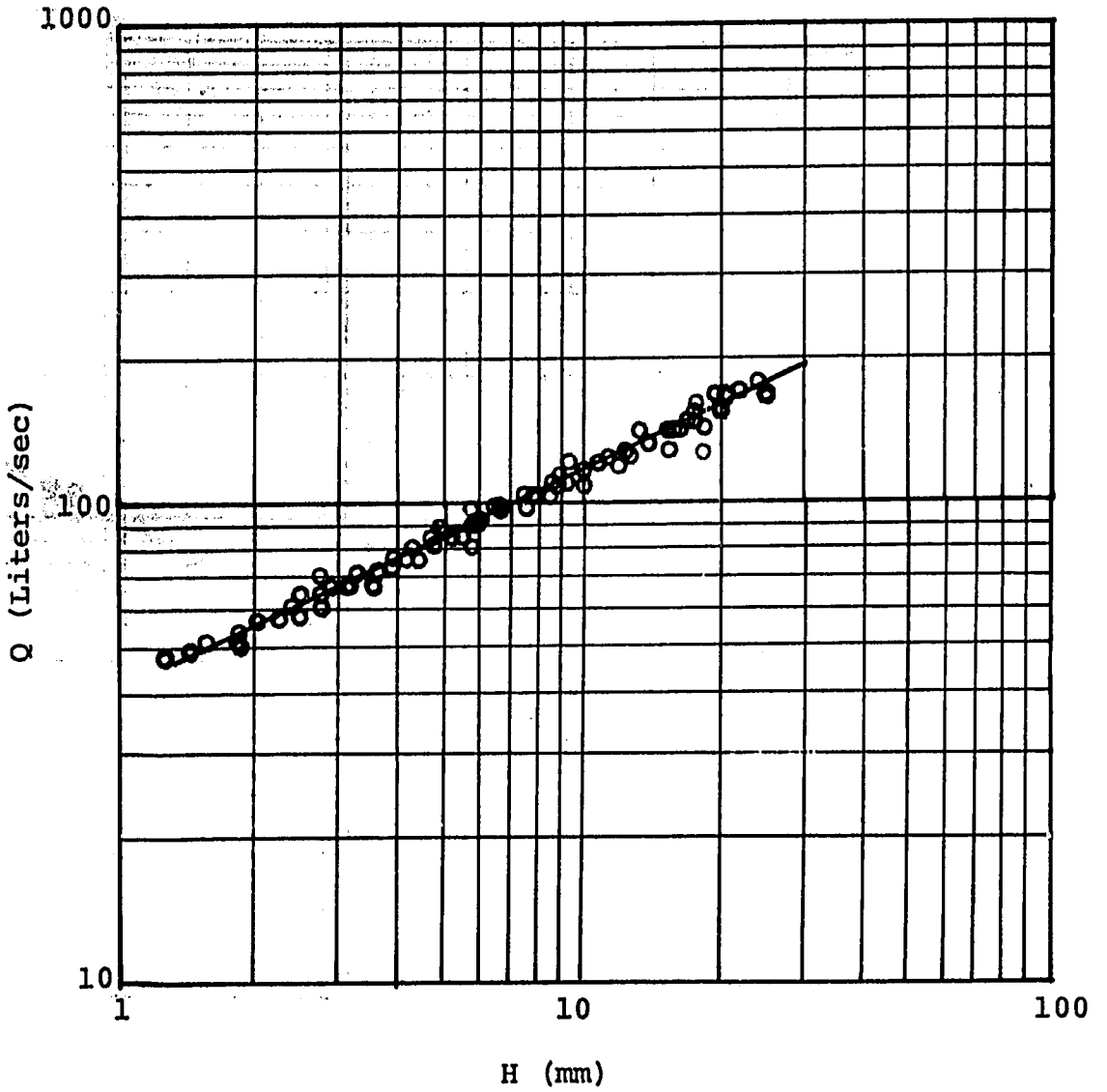

Fig. 6.7. Submerged Orifice Flow Discharge, Q, for the 0.38 m Diameter Circular Gate with a Crest Height of 0.19 m; As a Function of Head Difference, H ($H_1 - H_2$), $Q = 13.3\ H^{0.477}$, Correlation Coefficient $r^2 = 0.989$

For the 0.46 m diameter gate with a crest height of 0.18 m (Fig. 6.8),

$$Q = 21.3\ H^{0.475} \tag{6-13}$$

In Eqs. 6-11 , 6-12 , and 6-13 , Q is in liters per second and H is in mm . Equations 6-11 , 6-12 , and 6-13 are the discharge equations for the three circular gates operated under orifice flow.

In this study, the values of free flow discharge coefficient, C_{df} , the submerged discharge coefficient, C_{ds} , H_1/P and $(1 - S^n)$ were calculated with the help of a digital computer. The linear regression calculations for all the rating curves were determined using a Hewlett Packard programmable calculator.

DISCUSSION

HEAD MEASUREMENT - It was observed that the undisturbed flow took place upstream and downstream at the maximum discharge, 156 liters/sec, around the places where the first manometer and the tenth manometer were set (Fig. 5.1). Therefore, the upstream depth, Y_1 , and the downstream depth, Y_2 , were the values of the water level in the first manometer and the tenth manometer, respectively. The maximum depth in the channel was about 0.61 m , and the discharge of both the first and the tenth manometer were 4.88 m from the gate, and hence, a general rule to measure Y_1 and Y_2 was that they should be measured at a distance at least eight times the maximum depth of flow. The upstream, H_1 , was the value of

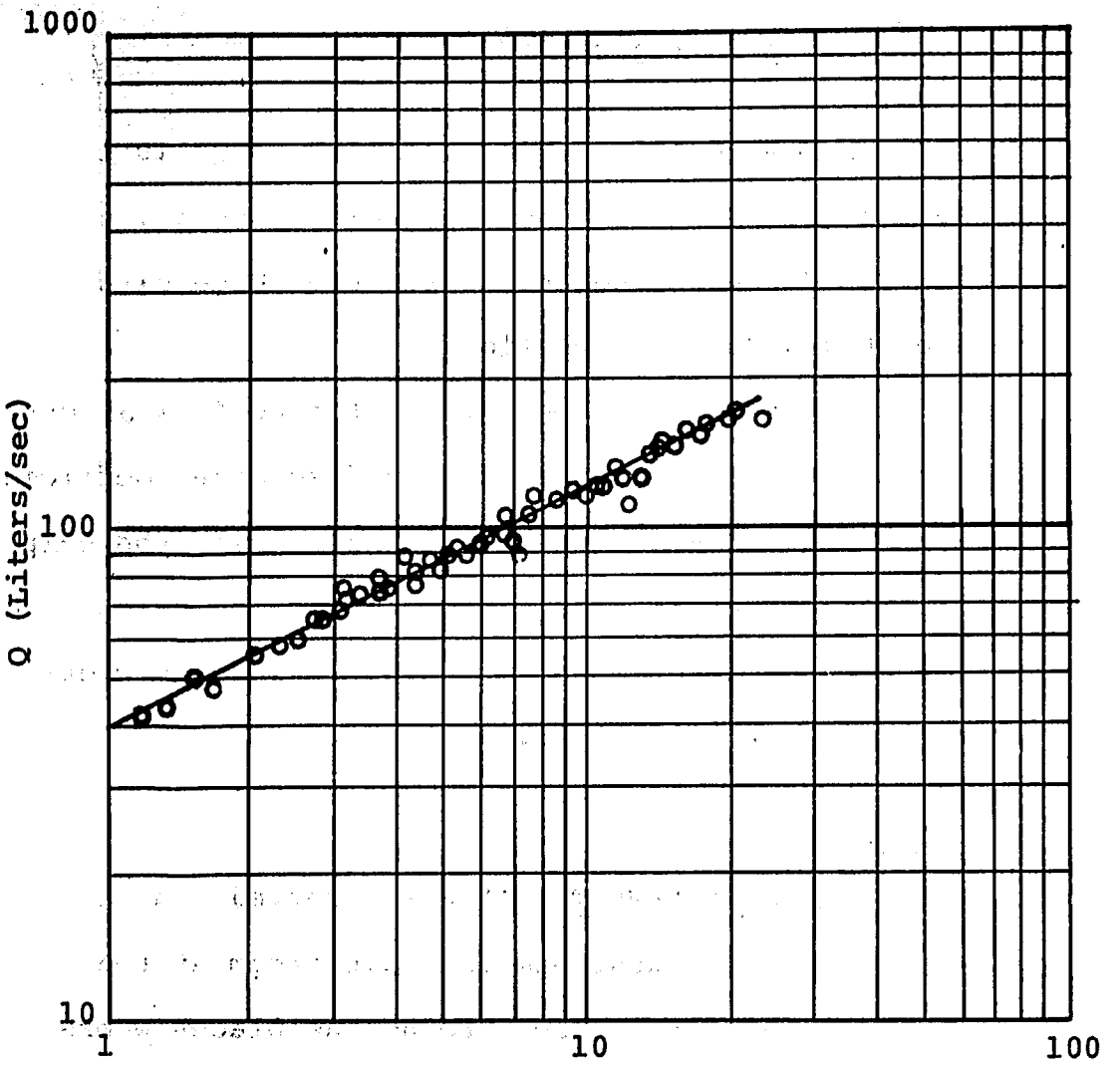

Fig. 6.8. Submerged Orifice Flow Discharge, Q, for the 0.46 m Diameter Circular Gate with a Crest Height of 0.18 m; As a Function of Head Difference, H ($H_1 - H_2$), $Q = 21.3\ H^{0.475}$, Correlation Coefficient $r^2 = 0.990$

water depth measured from the top of the crest in a weir flow condition, or

$$H_1 = Y_1 - P$$

In an orifice flow condition, H_1 is measured from the center of the orifice, or

$$H_1 = Y_1 - P - \frac{1}{2}D$$

The quanitity, H_2, is similarly defined with Y_1 replaced by Y_2.

THE EFFECT OF SUBMERGENCE RATIO - In a Parshall flume or a cutthroat flume, there is a free flow condition when critical flow occurs in the vicinity of the flume throat. This critical depth makes it possible to determine the discharge knowing only the upstream depth. In this submerged weir study, it was noted that when a surface nappe was changing into a plunging nappe, the standing wave of the surface nappe appeared very similar to a rolling hydraulic jump. As the discharge increased, eventually, a hydraulic jump would take place. As critical flow must exist before a hydraulic jump can occur, this observation implies that critical flow occurs in the vicinity of the weir notch when a plunging nappe appeared. Actually, this has been proven by the free discharge equations (Eqs. 6-1 and 6-3) because only the upstream head, H_1, was involved in those equations, and they gave a very accurate estimate on the discharge under the plunging nappe condition.

The plunging nappe could occur only when the submergence ratio reached some value, or below it. For the rectangular gate with a crest height of 0.08 m, the plunging nappe begins at a submergence ratio of 89 percent, at a submergence ratio of 51 percent for the 0.38 m diameter circular gate with a crest height of 0.13 m, at a submergence ratio of 38 percent for the 0.38 m diameter circular gate with a crest height of 0.19 m, and at a submergence ratio of 62 percent for the 0.46 m diameter circular gate with a crest height of 0.18 m.

One of the distinct differences between submerged weir flow and submerged jet orifice flow is that a critical flow can never occur in the vicinity of the orifice opening no matter how low the submergence ratio. This is because the flow through an orifice follows the law of flow in a closed conduit, and in a closed conduit critical flow is not defined. This is why only one kind of discharge equation was obtained in this submerged jet orifice study, and in those equations both the upstream head and downstream head were involved to calculate the discharge. In addition, the submergence ratio has very little effect on the submerged orifice flow.

THE DISCHARGE COEFFICIENT FOR THE INCLINED SUBMERGED WEIR - The submerged discharge coefficient C_{ds} for weirs has the relationship

$$C_{ds} = K(1 - S^n)^m$$

As discussed in Chapter IV, the results of Villemonte's study of seven vertical sharp-crested weirs of different shapes when

averaged arithmetically showed that K equal to 1.00 and m equal to 0.385. The maximum variation of each from the average is less than 1 percent. In this study, the average value of the four m's, 0.393, 0.385, 0.387 and 0.392, is 0.387, from which the maximum variation of each is less than 1.2 percent, if the K's value of each remains the same. The average of the four K's, 2.069, 1.128, 1.062 and 1.210 is 1.367. The averaged K results in an average variation of each is about 20 percent, when m = 0.387. It is apparent that the coefficient K is not equal to 1.00, and varied considerably with shape. For the rectangular gate, K = 2.069, and for circular gates K is between 1.062 and 1.210. This variation from the results of Villemonte was primarily caused by the inclination of the gates and the unsharped crest. The conclusions reached by comparing the results of this study. with that of Villemonte's are:

(1) The exponent value m does not vary appreciably, either with shapes or with the inclination of the weirs, and m always approximately equals 0.385.

(2) The coefficient K equal to 1.00 for vertical weirs with all kinds of shapes, but K no longer remains a constant when the gate is installed at some angle with the channel bottom, and K varied significantly with different shapes.

THE DISCHARGE COEFFICIENT FOR THE ORIFICE FLOW - Reviewing Eqs. 6-11, 6-12, and 6-13, the discharge equations for the orifice flow had a constant exponent, 0.477. It is

known that for an orifice flow, the discharge coefficient only depends on the boundary geometry. Hence, the arithmetic average of the two coefficients for the 0.38 m diameter circular gates was taken, and this average value, 0.843 was considered the discharge coefficient for the 0.38 m diameter circular gate. It had been shown previously that the discharge coefficient was a function of linear dimension ratios only. The same values of C_d might be used for equal ratios of the opening diameter to the channel width, B/L . This resulted in the discharge equation for the orifice flow in the form:

$$Q = C_d A\sqrt{2g}\ H^{0.477}$$

and,

$$C_d = 0.843 \quad \text{for} \quad B/L = 0.625 \ ,$$

$$C_d = 0.925 \quad \text{for} \quad B/L = 0.750 \ .$$

FREE FLOW NEAR THE TOP OF THE OPENING - When the ratio of upstream head, H_1 , to the diameter, D , of the circular opening was greater than about 80 percent to 86 percent, though the submergence ratio was in the plunging nappe flow range, the free flow discharge equation did not give an accurate flow estimate. The error was more than 5 percent, rapidly increasing as the submergence ratio decreased. This problem could be explained as follows:

When flow is at or near the critical state, the water surface undulates due to the fact that a minor change in

specific energy, the sum of velocity head and the potential head, will cause a major change in water depth. Those minor specific energy changes may be caused by variations in channel roughness, cross section, slope or deposits of sediment. Therefore, the wavy surface associated with critical flow touches the top of the opening and truly free flow does not occur under such conditions. Thus, under free flow conditions, when the water depth is approaching the top of the opening, the free flow discharge equation fails to yield an accurate answer. Knowing this point, the restriction of H_1/D less than 86 percent should be imposed on the applying of the free flow discharge equation. Thus, the free flow discharge equation can only be applied when plunging nappe takes place and H_1/D is less than 86 percent.

CHAPTER VII

SUMMARY, CONCLUSIONS AND RECOMMENDATIONS

SUMMARY

The purpose of this study has been to develop general discharge ratings for the four gates, one rectangular and three circular. As has been stated earlier, the rectangular gate can only operate under weir flow condition. The three circular gates can operate under either weir flow conditions, when the upstream water depth is lower than the top of the circular opening, or orifice flow conditions, when the upstream water depth is higher than the top of the circular opening. For the weir flow conditions, either free flow or submerged flow exists. For the orifice flow conditions, only submerged type flow takes place in the studies described here.

In this study, the discharge is given in liters per second, the weir length, L, the crest height, P, the opening diameter, D, the upstream head, H_1, and the downstream head, H_2, are all given in mm. The acceleration due to gravity is 9800 mm/sce^2, H_1 and H_2 are measured from the top of the crest to the undisturbed water surface in weir flow conditions, and are measured from the centerline of the circular opening to the undisturbed water surface in orifice flow conditions.

The results of the investigations are given in Table 3.

CONCLUSIONS

(a) H_1 and H_2 should be measured at a distance at least eight times the maximum depth of flow.

(b) The free flow weir equations, Eqs. 6-1 and 6-3 should be applied when H_1/D is less then 86 percent.

(c) When orifice flow takes place, both the upstream head and downstream head should be measured and applied to Eqs. 6-11 , 6-12 , and 6-13 .

RECOMMENDATIONS

Recommendations for further research are:

(1) Additional dimensions in crest heights and weir lengths or opening diameters be studied in order to determine if there is a general relationship for the discharge coefficient.

(2) More data be observed for circular gates operating under free flow weir conditions for H_1/D greater than 86 percent so that the problem of an undulating surface touching the top edge of the opening can be evaluated

(3) Additional inclination angles be studied.

Table 3. Discharge Equations for Models Investigated.

Geometry	Type of Flow Device		
	Weir		Orifice
	Free Flow (Plunging Nappe)	Submerged Flow (Surface Nappe)	
Rectangular L = 0.46 m P = 0.08 m	$Q = C_{df} L\sqrt{2g}\, H_1^{3/2} \times 10^{-6}$ $C_{df} = 0.481$, $S \leq 0.89$ *T.M.P. = 18 *T.D.P. = 3 *T.C.P. = 15	$Q = C_{df} C_{ds} L\sqrt{2g}\, H_1^{3/2} \times 10^{-6}$ $C_{ds} = 2.069(1 - S^{3/2})^{0.393}$ T.M.P. = 77 S>0.89 T.D.P. = 12 T.C.P. = 65	
Circular	$Q = C_{df} D^{5/2} PL(H_1/D) \times 10^{-6}$	$Q = C_{df} C_{ds} D^{5/2} PL(H_1/D)$	
D = 0.38 P = 0.14 m	$C_{df} = 0.990 - 0.080H_1/P$ T.M.P. = 15 T.D.P. = 0 T.C.P. = 15	$C_{ds} = 1.128(1 - S^2)^{0.385}$,S>0.51 T.M.P. = 114 T.D.P. = 20 T.C.P. = 94	$Q = 13.6H^{0.477}$ T.M.P. = 171 T.D.P. = 26 T.C.P. = 145
D = 0.38 m P = 0.19 m	$C_{df} = 0.990 - 0.080H_1/P$ T.M.P. = 9 T.D.P. = 0 T.C.P. = 9	$C_{ds} = 1.062(1 - S^2)^{0.378}$,S>0.38 T.M.P. = 57 T.D.P. = 3 T.C.P. = 54	$Q = 13.3H^{0.477}$ T.M.P. = 60 T.D.P. = 9 T.C.P. = 51
D = 0.46 m P = 0.18 m	$C_{df} = 0.990 - 0.080H_1/P$ T.M.P. = 9 T.D.P. = 0 T.C.P. = 9	$C_{ds} = 1.210(1 - S^2)^{0.392}$,S>0.62 T.M.P. = 54 T.D.P. = 4 T.C.P. = 50	$Q = 21.3H^{0.475}$ T.M.P. = 39 T.D.P. = 2 T.C.P. = 37

*Notes: T.M.P. = Total Measured Data Points
T.D.P. = Total Discarded Data Points
T.C.P. = Total Calculated Data Points

LITERATURE CITED

1. Hart, W. E., TDY Assignment in Pakistan, June 18 - August 2, 1975. Final Report, Agricultural Engineering Department, Colorado State University, Fort Collins (Unpublished).

2. Villemonte, J. R., "Submerged-Weir Discharge Studies," Engineering News-Record, Vol. 139, December 1947, pp. 866-69.

3. ASME Research Committee on Fluid Meters, "Classification and Nomenclature," Fluid Meters Their Theory and Application, 5th ed., The American Society of Mechanical Engineers, New York, 1959, pp. 11-13.

4. Mavis, F. T., "There's No Mystery in Weir Formulas," Engineering News-Record, Vol. 142, January 1949, p. 76.

5. King, E. F., "Sharp-Crested Weirs," Handbook of Hydraulics, 4th ed., McGraw-Hill Co., New York, 1954, pp. 4.1-.14.

6. United States Department of the Interior, Bureau of Reclamation, "Weirs," Water Measurement Manual, 2nd ed., United States Government Printing Office, Washington, 1967, p. 20.

7. Abramowitz, M., and Stegun, I. A., eds., "Gamma Function and Related Functions," Handbook of Mathematical Functions, Dover Publications, Inc., New York, 1961, pp. 14-18.

8. Vennard, J. K., and Weston, R. F., "Submergence Effect on Sharp-Crested Weirs," Engineering News-Record, Vol. 130, June 1943, pp. 814-16.

9. Rouse, H., "Dimensional Analysis," Fluid Mechanics for Hydraulic Engineers, Dover Publications, Inc., New York, 1961, pp. 14-18.

APPENDIX

Table 4. Hydraulic Laboratory Data for Rectangular Gate with a Crest Height of 0.08 m.

Q (Lit/sec)	H_1 (mm)	H_2 (mm)	H (mm)	S
60.89	257.00	251.92	5.08	98.023
64.85	258.01	251.92	6.10	97.637
71.37	259.54	251.92	7.62	97.064
77.31	260.55	251.66	8.89	96.588
83.54	262.08	251.92	10.16	96.123
91.19	264.62	251.92	12.70	95.201
97.70	267.16	250.65	16.51	93.820
104.78	269.19	251.41	17.78	93.395
77.31	221.44	206.20	15.24	93.118
82.69	223.98	206.20	17.78	92.062
88.08	226.52	206.20	20.32	91.029
95.72	230.33	206.20	24.13	89.524
40.21	230.33	227.79	2.54	98.897
50.98	231.60	227.03	4.57	98.026
58.06	232.87	226.77	6.10	97.382
65.70	235.41	227.03	8.38	96.439
70.80	236.68	226.52	10.16	95.707
75.05	237.95	226.77	11.18	95.303
79.30	239.22	226.52	12.70	94.691
83.83	241.25	227.03	14.22	94.104
89.49	244.30	227.79	16.51	93.242
95.72	246.84	227.79	19.05	92.282
103.37	249.63	227.79	21.84	91.250
109.32	253.19	226.52	26.67	89.466
47.58	183.34	176.23	7.11	96.121
49.56	183.34	175.72	7.62	95.844
48.71	279.86	277.57	2.29	99.183
55.79	281.13	277.83	3.30	98.825
62.02	281.38	277.57	3.81	98.646
67.40	282.40	277.57	4.83	98.291
72.22	283.16	277.32	5.84	97.937
80.15	284.94	277.32	7.62	97.326
111.86	272.24	251.92	20.32	92.536
117.24	274.78	251.92	22.86	91.681
123.48	277.32	252.43	24.89	91.024
125.17	278.59	251.92	26.67	90.427
142.73	277.57	193.50	84.07	69.711
140.89	275.03	193.50	81.53	70.355
147.83	284.94	189.69	95.25	66.572
151.34	289.76	188.42	101.35	65.025
115.89	242.01	155.40	86.61	64.211
122.91	251.92	157.94	93.98	62.694
127.44	258.27	154.13	104.14	59.677
123.19	251.41	156.67	94.74	62.316

Table 4. Continued

Q (Lit/sec)	H_1 (mm)	H_2 (mm)	H (mm)	S
86.38	286.21	277.57	8.64	96.983
71.93	379.17	376.38	2.79	99.263
81.28	379.93	376.38	3.56	99.064
113.00	237.19	158.45	78.74	66.802
126.96	259.54	198.58	60.96	76.512
131.69	264.87	196.04	68.83	74.012
165.96	310.34	241.76	68.58	77.901
168.79	315.42	239.22	76.20	75.842
65.99	216.36	206.20	10.16	95.304
71.93	218.90	206.20	12.70	94.198
48.99	254.97	251.92	3.05	98.805
55.79	256.24	251.92	4.32	98.315
31.72	180.29	177.75	2.54	98.591
43.05	182.07	175.97	6.10	96.652
50.69	183.85	175.72	8.13	95.579
102.80	234.14	206.20	27.94	88.067
133.10	281.89	251.66	30.23	89.277
140.18	285.19	251.92	33.27	88.333
151.34	289.76	191.47	98.30	66.076
58.06	213.82	206.20	7.62	96.436
34.83	253.19	251.92	1.27	99.498
118.09	280.11	251.92	28.19	89.935
85.24	202.39	173.18	29.21	85.567
107.90	238.71	206.20	32.51	86.380
88.36	380.70	376.38	4.32	98.866
113.28	247.09	201.12	45.97	81.394
140.89	292.05	249.38	42.67	85.389
148.82	295.10	246.84	48.26	83.646
57.49	187.15	175.72	11.43	93.893
62.02	189.69	175.72	13.97	92.635
30.02	278.59	277.57	1.02	99.635
39.93	279.86	278.33	1.52	99.455

Table 5. Hydraulic Laboratory Data for 0.38 m Diameter Circular Gate with a Crest Height of 0.14 m, Weir Flow.

Q (Lit/sec)	H_1 (mm)	H_2 (mm)	H (mm)	S
30.02	187.88	175.18	12.70	93.240
34.55	191.69	172.64	19.05	90.062
38.23	195.50	172.64	22.86	88.307
45.31	204.39	168.83	35.56	82.602
34.55	192.96	171.37	21.59	88.811
41.91	198.04	170.10	27.94	85.891
47.01	203.12	167.56	35.56	82.493
50.98	206.93	166.29	40.64	80.360
40.78	198.04	172.64	25.40	87.174
29.17	190.42	180.26	10.16	94.664
58.34	217.09	168.83	48.26	77.769
63.44	223.44	166.29	57.15	74.422
49.56	208.20	167.56	40.64	80.480
45.31	203.12	170.10	33.02	83.743
37.38	196.77	172.64	24.13	87.737
29.17	190.42	176.45	13.97	92.663
53.81	215.82	165.02	50.80	76.461
56.64	213.28	165.02	48.26	77.372
60.89	217.09	162.48	54.61	74.844
62.87	220.90	162.48	58.42	73.553
50.98	209.47	168.83	40.64	80.598
31.72	186.61	172.64	13.97	92.514
41.35	195.50	168.83	26.67	86.358
50.69	205.66	165.02	40.64	80.239
72.78	234.87	162.48	72.39	69.178
78.45	245.03	157.40	87.63	64.236
92.61	256.46	153.59	102.87	59.888
93.74	261.54	153.59	107.95	58.725
99.12	267.89	149.78	118.11	55.910
103.65	272.97	148.51	124.46	54.405
106.20	279.32	145.97	133.35	52.258
113.00	284.40	143.43	140.97	50.432
118.38	292.02	142.16	149.86	48.681
123.76	299.64	139.62	60.02	46.595
125.74	303.45	138.35	65.10	45.592
137.07	326.31	137.08	89.23	42.008
58.34	214.55	162.48	52.07	75.730
59.19	222.17	159.94	62.23	71.989
69.38	231.06	157.40	73.66	68.120
75.05	238.68	154.86	83.82	64.881
79.86	243.76	152.32	91.44	62.487
85.81	251.38	151.05	00.33	60.088
92.89	260.27	149.78	10.49	57.547
99.69	267.89	148.51	19.38	55.436

Table 5. Continued

Q (Lit/sec)	H_1 (mm)	H_2 (mm)	H (mm)	S
77.31	264.08	213.28	50.80	80.763
81.00	267.38	213.28	54.10	79.766
86.09	272.97	210.74	62.23	77.202
91.47	278.05	209.47	68.58	75.335
96.85	284.40	208.20	76.20	73.206
106.20	294.56	205.66	88.90	69.819
109.88	298.37	203.12	95.25	68.076
115.55	304.72	201.85	102.87	66.241
119.79	309.80	200.58	109.22	64.745
126.02	319.96	198.04	121.92	61.895
127.44	323.77	196.77	127.00	60.774
119.23	305.99	190.42	115.57	62.230
125.46	312.84	186.61	126.24	59.648
131.97	322.50	185.34	137.16	57.469
136.50	332.66	180.26	152.40	54.187
141.60	346.63	175.18	171.45	50.537
144.43	353.23	175.18	178.05	49.593
147.55	365.68	157.40	208.28	43.042
143.30	380.92	152.32	228.60	39.987
140.18	339.01	137.08	201.93	40.435
146.13	361.87	116.76	245.11	32.265
147.26	365.68	172.64	193.04	47.210
152.36	380.92	168.83	212.09	44.321
157.46	398.70	165.02	233.68	41.389
105.35	292.52	205.66	86.87	70.304
110.73	299.64	204.39	95.25	68.211
118.66	308.53	201.85	106.68	65.423
127.16	321.23	199.31	121.92	62.045
133.39	332.66	195.50	137.16	58.768
139.05	345.36	192.96	152.40	55.872
145.00	372.03	190.42	181.61	51.184
152.36	383.96	185.34	198.63	48.269
156.33	396.16	182.80	213.36	46.142
161.71	416.48	180.26	236.22	43.281
166.80	445.69	170.10	275.59	38.165
28.32	228.52	222.17	6.35	97.221
32.57	231.06	222.17	8.89	96.152
38.23	233.60	220.90	12.70	94.563
43.61	236.14	220.39	15.75	93.331
45.88	238.68	219.63	19.05	92.018
52.11	241.47	218.61	22.86	90.533
56.64	245.03	218.36	26.67	89.115
60.60	248.84	217.09	31.75	87.241
63.44	251.38	217.09	34.29	86.359

Table 5. Continued

Q (Lit/sec)	H_1 (mm)	H_2 (mm)	H (mm)	S
69.10	239.18	185.34	53.85	77.487
73.92	245.03	182.80	62.23	74.603
80.15	251.38	180.26	71.12	71.708
109.60	284.40	172.64	111.76	60.703
112.15	292.02	170.10	121.92	58.249
120.64	299.64	170.10	129.54	56.768
126.31	307.26	168.83	138.43	54.946
82.69	253.92	180.26	73.66	70.990
90.62	264.08	177.72	86.36	67.297
96.57	269.16	175.18	93.98	65.083
102.80	278.05	189.15	88.90	68.027
84.39	256.46	178.99	77.47	69.792
92.61	265.35	175.18	90.17	66.018
98.84	272.97	172.64	100.33	63.245
109.32	285.67	167.56	118.11	58.655
121.49	299.64	161.21	138.43	53.801
127.16	307.26	157.40	149.86	51.226
131.69	314.88	156.13	158.75	49.583
135.65	322.50	155.62	166.88	48.254
132.54	317.42	159.94	157.48	50.387
127.72	309.80	159.94	149.86	51.626
105.63	281.86	170.10	111.76	60.349
47.58	218.36	190.42	27.94	87.204
132.54	317.42	165.02	152.40	51.987
136.79	327.58	162.48	165.10	49.600
141.60	344.09	159.94	184.15	46.481
144.43	356.79	157.40	199.39	44.115
141.60	342.82	149.78	193.04	43.690
145.28	355.52	148.51	207.01	41.772
149.25	368.22	144.70	223.52	39.297
137.35	327.58	152.32	175.26	46.498
28.32	229.79	223.44	6.35	97.237
34.83	232.33	223.44	8.89	96.173
42.48	236.14	222.17	13.97	94.084
48.14	239.95	220.90	19.05	92.061
53.52	243.76	219.63	24.13	90.101
58.34	246.30	218.36	27.94	88.656
64.57	251.88	217.09	34.80	86.185
70.80	259.00	215.82	43.18	83.328
78.16	264.08	213.28	50.80	80.763
83.26	269.16	212.01	57.15	78.767
88.36	274.74	210.74	64.01	76.703
95.72	283.13	208.20	74.93	73.535
101.39	288.21	206.93	81.28	71.798

Table 5. Continued

Q (Lit/sec)	H_1 (mm)	H_2 (mm)	H (mm)	S
109.03	279.32	147.24	132.08	52.713
116.40	289.48	144.70	144.78	49.986
123.76	300.14	143.43	156.72	47.786
131.97	314.88	142.16	172.72	45.147
31.72	208.20	198.04	10.16	95.120
41.91	214.55	195.50	19.05	91.121
50.13	220.90	192.96	27.94	87.352
58.06	228.52	189.15	39.37	82.771
35.40	200.58	181.53	19.05	90.502
30.02	208.20	198.04	10.16	95.120
40.21	212.01	195.50	16.51	92.212
50.13	218.86	191.69	27.18	87.582
57.21	225.98	189.15	36.83	83.702
64.29	234.87	185.59	49.28	79.020
68.25	238.68	185.34	53.34	77.652
75.90	246.30	182.80	63.50	74.218
64.57	234.87	186.61	48.26	79.452

Table 6. Hydraulic Laboratory Data for 0.38 m Diameter Circular Gate with a Crest Height of 0.14 m, Orifice Flow.

Q (Lit/Sec)	H_1 (mm)	H_2 (mm)	H (mm)
38.77	169.06	160.94	~~8.13~~
46.95	173.64	158.40	15.24
65.14	183.80	155.86	27.94
102.24	163.22	97.44	65.79
147.55	181.26	23.78	157.48
154.34	193.70	18.44	175.26
160.01	204.12	13.62	190.50
165.11	219.36	10.82	208.53
127.72	146.97	35.21	111.76
135.09	158.40	31.40	127.00
135.09	158.40	31.40	127.00
141.60	169.83	27.59	142.24
70.80	186.34	154.59	31.75
70.80	186.34	153.32	33.02
78.16	192.18	152.05	40.13
73.63	190.15	153.32	36.83
84.96	199.04	150.78	48.26
100.11	211.74	145.70	66.04
113.28	224.44	140.62	83.82
127.61	237.14	135.54	101.60
141.65	254.92	127.92	127.00
156.55	281.59	120.30	161.29
77.88	193.96	153.32	40.64
75.61	191.42	153.32	38.10
56.67	177.45	158.40	19.05
56.64	179.99	158.40	21.59
70.80	188.88	154.59	34.29
42.48	172.37	160.94	11.43
46.73	173.64	158.40	15.24
50.13	174.91	158.40	16.51
58.34	178.72	157.13	21.59
63.44	181.26	155.86	25.40
42.48	171.10	159.67	11.43
151.51	277.78	125.38	152.40
159.44	291.75	121.57	170.18
166.52	305.72	116.49	189.23
108.18	221.90	145.70	76.20
121.21	237.14	140.62	96.52
131.40	249.84	134.27	115.57
140.47	262.54	130.46	132.08
83.54	199.04	153.32	45.72
88.36	202.85	152.05	50.80
94.87	209.24	149.51	59.69

Table 6. Continued

Q (Lit/Sec)	H_1 (mm)	H_2 (mm)	H (mm)
68.62	133.00	105.06	27.94
57.21	129.19	108.87	20.32
70.23	136.81	110.14	26.67
41.91	120.30	108.87	11.43
36.82	117.76	110.14	7.62
50.55	124.11	107.60	16.51
56.19	126.65	110.14	16.51
141.88	207.93	74.58	133.35
146.41	216.82	72.04	144.78
159.72	238.41	60.61	177.80
155.76	232.06	65.69	166.37
99.12	155.86	94.90	60.96
110.16	167.29	89.82	77.47
113.28	172.37	88.55	83.82
127.16	186.34	83.47	102.87
36.82	117.76	111.41	6.35
50.07	122.84	107.60	15.24
57.52	125.38	105.06	20.32
62.30	129.19	105.06	24.13
70.80	134.27	102.52	31.75
76.24	138.08	99.98	38.10
83.83	143.16	99.98	43.18
42.48	119.03	107.60	11.43
66.27	140.62	112.68	27.94
67.51	140.62	112.68	27.94
37.47	117.76	108.87	8.89
45.88	120.30	107.60	12.70
99.35	160.94	97.44	63.50
113.28	176.18	93.63	82.55
109.32	167.29	92.36	74.93
122.06	181.26	87.28	93.98
84.96	148.24	102.52	45.72
99.60	162.21	98.71	63.50
113.28	176.18	92.36	83.82
127.44	192.69	87.28	105.41
43.64	74.58	64.42	10.16
51.06	78.39	63.15	15.24
71.39	89.82	59.34	30.48
155.76	195.23	3.46	191.77
167.94	260.00	56.80	203.20
141.60	211.74	79.66	132.08
62.30	136.81	112.68	24.13
45.31	74.58	61.88	12.70
99.60	112.68	50.45	62.23
113.28	130.46	44.10	86.36

Table 6. Continued

Q (Lit/Sec)	H_1 (mm)	H_2 (mm)	H (mm)
126.82	145.70	37.75	107.95
141.60	169.83	28.86	140.97
75.61	92.36	58.07	34.29
79.47	94.90	56.80	38.10
81.65	97.44	56.80	40.64
84.96	99.98	56.80	43.18
99.69	112.68	49.18	63.50
73.35	91.09	58.07	33.02
85.81	99.98	54.26	45.72
91.76	105.06	51.72	53.34
99.40	111.41	49.18	62.23
105.35	117.76	46.64	71.12
112.43	125.38	44.10	81.28
120.93	136.81	39.02	97.79
58.37	82.20	60.61	21.59
62.53	84.74	60.61	24.13
65.28	86.01	59.34	26.67
67.51	87.28	59.34	27.94
42.48	121.57	110.14	11.43
56.64	127.92	108.87	19.05
62.87	183.80	158.40	25.40
69.67	188.88	155.86	33.02
76.18	191.42	154.59	36.83
80.71	196.50	153.32	43.18
38.80	171.10	160.94	10.16
33.13	168.56	160.94	7.62
42.48	171.10	162.21	8.89
52.96	177.45	159.67	17.78
133.95	195.23	80.93	114.30
143.30	210.47	75.85	134.62
153.78	226.98	69.50	157.48
160.29	239.68	64.42	175.26
76.18	141.89	105.06	36.83
81.28	145.70	102.52	43.18
86.09	149.51	102.52	46.99
90.91	153.32	99.98	53.34
38.80	72.04	63.15	8.89
65.99	82.20	56.80	25.40
91.76	105.06	54.26	50.80
77.03	92.36	56.80	35.56
82.13	96.17	54.26	41.91
71.08	88.55	55.53	33.02
67.97	86.01	58.07	27.94
59.76	82.20	59.34	22.86

Table 6. Continued

Q (Lit/Sec)	H_1 (mm)	H_2 (mm)	H (mm)
55.79	79.66	60.61	19.05
60.04	82.20	59.34	22.86
65.14	84.74	59.34	25.40
70.80	88.55	58.07	30.48
70.80	86.01	55.53	30.48
75.90	89.82	54.26	35.56
79.58	92.36	54.26	38.10
83.83	94.90	52.99	41.91
47.01	72.04	59.34	12.70
49.56	74.07	58.83	15.24
54.94	77.12	58.07	19.05
60.89	79.66	56.80	22.86
41.35	69.50	59.34	10.16
43.61	70.77	59.34	11.43

Table 7. Hydraulic Laboratory Data for 0.38 m Diameter Circular Gate with a Crest Height of 0.19 m, Weir Flow.

Q (Lit/Sec)	H_1 (mm)	H_2 (mm)	H (mm)	S
101.67	254.90	76.84	178.05	30.147
107.62	266.07	78.11	187.96	29.358
116.68	275.73	77.61	198.12	28.146
120.08	283.85	75.57	200.28	26.624
55.79	203.84	146.69	57.15	71.964
60.89	210.19	144.15	66.04	68.581
66.84	217.31	141.87	75.44	65.285
72.22	224.16	140.34	83.82	62.608
78.73	232.55	136.53	96.01	58.713
85.53	240.67	133.99	106.68	55.675
91.76	248.55	132.72	115.82	53.400
98.27	256.42	130.18	126.24	50.770
106.77	268.61	126.88	141.73	47.236
115.26	278.77	125.10	153.67	44.877
45.31	191.14	151.77	39.37	79.403
50.13	197.49	149.23	48.26	75.564
114.70	278.27	128.41	149.86	46.145
123.48	288.93	126.37	162.56	43.738
129.14	297.06	123.83	173.23	41.686
137.64	309.76	121.29	188.47	39.157
38.80	184.29	154.57	29.72	83.874
43.61	189.87	152.28	37.59	80.202
35.97	180.98	156.85	24.13	86.667
43.05	189.62	154.31	35.31	81.381
58.91	207.91	146.95	60.96	70.679
65.14	216.54	144.15	72.39	66.570
73.63	225.94	141.61	84.33	62.677
82.69	238.13	136.53	101.60	57.335
35.40	225.43	215.27	10.16	95.493
40.78	229.24	215.27	13.97	93.906
46.30	232.55	213.50	19.05	91.808
50.98	235.59	212.99	22.61	90.405
147.26	353.70	177.17	176.53	50.091
154.63	370.21	172.09	198.12	46.485
94.87	253.37	131.45	121.92	51.882
72.22	215.27	88.27	127.00	41.006
89.26	217.81	113.67	104.14	52.189
93.65	222.89	111.13	111.76	49.860
99.86	230.51	108.59	121.92	47.110
103.79	234.32	107.32	127.00	45.802
46.44	169.55	132.72	36.83	78.278
48.99	172.35	131.45	40.89	76.273
53.81	177.94	128.91	49.02	72.450
60.04	184.79	126.37	58.42	68.387

Table 7. Continued

Q (Lit/Sec)	H_1 (mm)	H_2 (mm)	H (mm)	S
27.47	151.77	139.33	12.45	91.800
33.13	156.85	137.80	19.05	87.855
38.80	161.93	135.26	26.67	83.530
44.18	167.01	133.49	33.53	79.925
116.68	299.60	193.68	105.92	64.647
123.19	309.25	191.91	117.35	62.055
128.29	316.87	189.37	127.51	59.761
53.81	202.57	149.23	53.34	73.669
110.45	241.44	106.05	135.38	43.926
116.74	248.29	100.97	147.32	40.667

Table 8. Hydraulic Laboratory Data for 0.38 m Diameter Circular Gate with a Crest Height of 0.19 m, Orifice Flow.

Q (Lit/Sec)	H_1 (mm)	H_2 (mm)	H (mm)
61.74	71.49	47.36	24.13
66.55	74.54	46.09	28.45
71.93	78.61	45.59	33.02
76.46	81.65	43.55	38.10
76.46	81.65	43.55	38.10
80.71	85.46	43.55	41.91
84.68	88.77	41.78	46.99
89.49	92.32	41.01	51.31
94.02	97.40	38.98	58.42
100.25	104.51	37.20	67.31
106.20	110.86	34.66	76.20
113.85	119.75	30.85	88.90
119.51	127.88	28.82	99.06
129.14	141.34	24.50	116.84
134.24	150.23	20.69	129.54
138.46	157.60	19.42	138.18
31.44	104.51	98.16	6.35
40.78	107.56	96.89	10.67
44.75	109.59	96.39	13.21
50.98	112.13	94.86	17.27
57.49	114.67	92.07	22.61
62.02	117.98	93.08	24.89
66.55	121.28	91.81	29.46
70.52	124.33	91.81	32.51
74.48	127.37	90.54	36.83
77.88	129.91	89.27	40.64
81.28	132.45	89.02	43.43
85.81	136.26	87.24	49.02
90.06	140.07	86.23	53.85
100.25	150.23	82.92	67.31
107.62	157.85	79.37	78.49
118.38	170.05	74.29	95.76
150.32	174.11	.37	173.74
146.98	169.28	4.18	165.10
142.17	160.39	7.99	152.40
135.09	148.96	14.34	134.62
146.70	172.59	14.34	158.24
154.34	185.79	9.77	176.02
159.16	195.95	5.45	190.50
163.12	205.61	2.91	202.69
119.51	127.88	28.82	99.06
129.14	141.34	24.50	116.84
134.24	150.23	20.69	129.54
138.48	157.60	19.42	138.18

Table 8. Continued

Q (Lit/Sec)	H_1 (mm)	H_2 (mm)	H (mm)
42.48	61.33	49.90	11.43
49.28	65.14	49.14	16.00
56.07	68.95	48.63	20.32
128.57	181.98	70.22	111.76
128.57	181.98	70.22	111.76
137.35	194.68	63.87	130.81
146.70	208.65	60.06	148.59

Table 9. Hydraulic Laboratory Data for 0.48 m Diameter Circular Gate with a Crest Height of 0.18 m, Weir Flow.

Q (Lit/Sec)	H_1 (mm)	H_2 (mm)	H (mm)	S
120.36	277.30	190.94	86.36	68.857
126.02	282.89	189.67	93.22	67.048
131.97	288.73	188.40	100.33	65.251
139.45	295.08	185.86	109.22	62.986
146.78	302.70	183.32	119.38	60.562
154.63	310.32	180.27	130.05	58.092
157.18	312.86	179.51	133.35	57.377
165.25	320.48	176.97	143.51	55.220
35.40	252.15	248.09	4.06	98.388
44.75	254.44	246.82	7.62	97.005
50.98	256.98	246.82	10.16	96.046
63.32	260.79	244.79	16.00	93.864
72.50	264.60	243.77	20.83	92.128
81.96	269.68	241.74	27.94	89.640
91.76	274.76	239.71	35.05	87.243
104.50	282.38	236.66	45.72	83.809
115.46	292.03	236.66	55.37	81.039
126.22	299.65	235.39	64.26	78.554
138.91	309.81	231.58	78.23	74.749
146.98	315.91	230.31	85.60	72.904
157.66	325.56	227.77	97.79	69.963
166.01	331.91	226.50	105.41	68.241
169.92	335.72	221.42	114.30	65.954
172.75	338.26	218.88	119.38	64.708
40.04	286.19	282.38	3.81	98.669
48.14	287.46	281.11	6.35	97.791
56.19	290.00	279.84	10.16	96.497
62.93	292.03	279.84	12.19	95.825
71.93	295.08	279.84	15.24	94.835
82.13	297.62	278.57	19.05	93.599
91.47	302.70	277.30	25.40	91.609
104.50	307.78	274.76	33.02	89.272
113.28	312.86	273.49	39.37	87.416
122.20	317.94	272.22	45.72	85.620
128.29	321.75	272.22	49.53	84.606
133.67	325.56	269.68	55.88	82.836
147.26	333.18	267.14	66.04	80.179
156.69	339.53	264.60	74.93	77.931
164.96	345.88	262.06	83.82	75.766
170.49	350.96	260.79	90.17	74.308
173.88	355.53	259.52	96.01	72.995
161.71	340.80	259.01	81.79	76.001
163.97	343.34	258.25	85.09	75.217
178.42	342.07	216.34	125.73	63.244

Q (Lit/Sec)	h_1 (mm)	h_2 (mm)	H (mm)	S
169.35	325.56	175.70	149.86	53.969
171.05	329.37	173.16	156.21	52.573
133.56	279.84	104.58	175.26	37.371
139.90	286.19	107.12	179.07	37.430
122.20	265.11	112.20	152.91	42.322
128.40	272.73	107.12	165.61	39.277

Table 10. Hydraulic Laboratory Data for 0.48 m Diameter Circular Gate with a Crest Height of 0.8 m, Orifice Flow.

Q (Lit/Sec)	H_1 (mm)	H_2 (mm)	H (mm)
63.72	85.26	75.10	10.16
72.22	87.80	75.10	12.70
78.81	90.34	74.59	15.75
85.64	92.88	73.83	19.05
92.04	95.42	72.81	22.61
97.70	97.71	72.56	25.15
104.50	100.50	72.56	27.94
111.30	103.04	71.29	31.75
137.35	115.23	67.48	47.75
145.42	119.55	65.45	54.10
152.47	123.61	64.94	58.67
158.59	127.93	62.65	65.28
41.91	52.49	48.43	4.06
54.83	55.03	47.41	7.62
70.09	59.35	47.16	12.19
85.24	63.67	44.87	18.80
96.57	67.48	44.11	23.37
107.90	72.56	42.08	30.48
115.66	76.37	40.81	35.56
122.40	80.18	39.54	40.64
100.11	70.02	44.62	25.40
133.10	85.26	38.27	46.99
142.17	90.34	37.00	53.34
150.66	95.42	34.46	60.96
127.44	74.59	26.84	47.75
117.53	68.75	29.38	39.37
48.54	82.47	76.37	6.10
55.79	83.99	75.61	8.38
158.59	174.92	101.52	73.41
162.84	177.97	101.52	76.45
166.52	182.29	101.52	80.77
170.20	185.34	98.72	86.61
118.46	105.58	70.02	35.56
123.19	108.12	70.02	38.10
124.61	108.37	70.02	38.35
124.04	72.56	29.38	43.18
41.91	80.43	76.37	4.06
156.61	99.23	34.46	64.77
163.46	103.04	33.19	69.85