AGENCY FOR INTERNATIONAL DEVELOPMENT
WASHINGTON, D. C. 20523
BIBLIOGRAPHIC INPUT SHEET

FOR AID USE ONLY

1. SUBJECT CLASSIFICATION
A. PRIMARY: Serials — Y-AN20-0000-GG50
B. SECONDARY: Food production and nutrition--Farm equipment--Tropics

2. TITLE AND SUBTITLE
Rice machinery development and industrial extension; semi-annual progress report, Jan-June, 1976

3. AUTHOR(S)
(101) IRRI

4. DOCUMENT DATE: 1976
5. NUMBER OF PAGES: 68p.
6. ARC NUMBER: ARC

7. REFERENCE ORGANIZATION NAME AND ADDRESS
IRRI

8. SUPPLEMENTARY NOTES (Sponsoring Organization, Publishers, Availability)
(Research summary)

9. ABSTRACT
A PROJECT: To increase the income and welfare of small rice farmers and to foster farm equipment manufacture in developing countries. Conducting the project is the International Rice Research Institute (IRRI) in Manila, Phillipines.
DURATION: 1965 - Ongoing.
DEVELOPMENTS: Appropriate machines can increase food production and reduce costs. Local machine production expands rural-based industry opportunities and other sectors of the economy. Project Report #22 focuses on the project's recent effort to increase the versatility and applicability of IRRI power tillers in varying operating conditions. For countries where diesel fuel is much less expensive than gasoline, the 5-7 hp tiller was modified to accommodate a diesel engine. Work on determining the suitability of the IRRI tiller in upland conditions is underway. The report also describes: Continued development of the vertical axis windmill pump system, designs for a portable axial flow thresher for sorghum and soybeans, and the use of nomographs for jet pump designs. Updated are the compacted soil study, now in its seventh cropping season, and designs for the liquid injector prototype. A section on mechanization systems points to substantial grain-loss reduction and increased net retruns when mechanical threshers and dryers are introduced. During this reporting period, industrial extension of IRRI designs made significant progress: Projects have begun in Thailand and in Pakistan.

10. CONTROL NUMBER
PN-AAD-001

11. PRICE OF DOCUMENT

12. DESCRIPTORS
Agricultural machinery
Intermediate technology
Rice

13. PROJECT NUMBER

14. CONTRACT NUMBER
AID/ta-C-1208 Res.

15. TYPE OF DOCUMENT

AID 590-1 (4-74)

Semiannual Progress Report No. 22
January 1 - June 30, 1976

RICE MACHINERY DEVELOPMENT AND INDUSTRIAL EXTENSION*

*AID/ta-C-1208

AGRICULTURAL ENGINEERING DEPARTMENT
THE INTERNATIONAL RICE RESEARCH INSTITUTE
P. O. BOX 933 MANILA PHILIPPINES

IRRI RICE MACHINERY DEVELOPMENT

PRIMARY OBJECTIVES of the machinery development program are increasing the income and welfare of small rice farmers and fostering farm equipment manufacturing in developing countries. Improved mechanical technologies contribute directly to these goals by increasing food production through increased yields, reductions in field and post-production losses, increased cropping intensity, and improvement in quality and value of agricultural products. Appropriate machines can also reduce costs -- a direct benefit to the low-income rice consumer. Mechanization based on local production conserves foreign exchange, expands opportunities in rural-based industries, strengthens linkages between agriculture and other sectors of the economy, and enhances training opportunities in small-scale manufacturing.

PROGRAM PROCEDURES begin by developing machines that satisfy two major conditions. First, designs must be compatible with the technical and economic needs of small farmers who use them. Secondly, the manufacture and servicing of the machines must be within the technical capabilities of indigenous small and medium -scale machine shops. Drawings, design information, and limited technical support are given free of charge to manufacturers who: want to produce IRRI designs on a commercial basis, agree to the conditions of a Memorandum of Agreement, and provide information on their manufacturing facilities and marketing plans. IRRI retains world-wide distribution and patent rights for all designs developed at IRRI and does not grant exclusive manufacturing rights or licenses.

TRAINING OPPORTUNITIES include a two-week engineering course that is conducted semiannually. Participants are expected to develop competency in the operation, maintenance, and manufacturing aspects of IRRI designs. Enrollment is limited to 12 persons per class.

FINANCIAL SUPPORT for the development program comes from the IRRI budget which is funded by the Consultative Group on International Agricultural Research. Industrial extension projects in Pakistan, Philippines, and Thailand are supported by an United States Agency for International Development contract.

LOCATION of the main research and development facility is at the International Rice Research Institute, Los Banos, Philippines, with national liaison links found in countries throughout Asia, Latin America, and Africa. Reports describing program activities are issued semiannually and may be obtained upon request.

Agricultural Engineering Department
International Rice Research Institute
P. O. Box 933, Manila, Philippines

TABLE OF CONTENTS

Title	Page
Introduction and Summary	1
Design and Development	4
Steering clutches for 5-7 hp tiller	4
5-7 hp diesel tiller	4
6 hp diesel tiller	5
8-12 hp diesel tiller	6
Small 4-wheel riding tractor	7
Tubular pump	7
Vertical axis windmill	8
Liquid injector for lowland rice	8
Spot injector for granular fertilizer and insecticide	9
Axial flow thresher with oscillating conveyor	10
Portable axial flow thresher	11
PTO thresher	12
Small oscillating grain cleaner	12
Jet pump design nomographs	13
Tables and figures	15
Mechanization Research	29
Compacted soil studies	29
Liquid injector evaluations	29
Diaphragm pump tests	30
Moisture meter test	31
Test of axial flow thresher with oscillating conveyor	31
Tables and figures	33
Mechanization Systems	34
Production and marketing of power tillers in the Philippines	34
Power tiller survey	35
Alternate field post-production systems	36
Potential of mechanizing upland cropping operations	38
Tables and figures	40
Industrial Extension	55
Introduction	55
Industrial extension subcontract program	55
Manufacturing cost reduction project	57
Industrial extension project in Thailand	58
Industrial extension project in Pakistan	59
Tables and figures	61
Personnel List	67

INTRODUCTION AND SUMMARY

Considerable development effort during this reporting period was devoted to increasing the versatility and applicability of IRRI power tillers in varying operating conditions. The steering clutches were redesigned and have satisfactorily passed preliminary tests. The 5-7 hp tiller was modified to accommodate a diesel engine, for those countries where diesel fuel is much less expensive than gasoline. The objective is to offer diesel or gasoline engine options with the same basic tiller design. Work on determining the suitability of the IRRI tiller in upland conditions is underway.

Development continued on the vertical axis windmill pump system. Several units will be installed at various Philippine locations to determine long term pumping characteristics and associated economic data. A simple piston pump is being designed to provide greater water lift potential for this system.

A portable axial flow thresher that can be carried into the field by two men was designed during this period and is under field test. It was developed to meet the demand for a low-cost, light-weight thresher by farmers who are not able to purchase the more expensive axial flow thresher. Sorghum and soybean threshing capabilities of this machine look promising.

A simplified procedure for determining the critical design parameters of the jet pump attachment for a centrifugal pump is presented in this report. The use of nomographs replaces most of the desk calculations previously required for determining these parameters.

Development work on the direct exposure parboiler and Engleberg rice mill has been delayed because of a lack of available manpower.

The compacted soil studies are in the seventh cropping season. Deepening of the compacted layer depths has moderated but not yet stabilized. The 4-wheel tractor experienced some bogging problems during the 5th cropping season and could not be used to complete land preparation during the 6th season due to excessive bogging.

A large number of liquid injector prototypes were distributed to interested groups and individuals in the Philippines and other countries for field evaluation. Preliminary reports of structural deficiencies, difficulties in poorly prepared fields, and excessive application time indicated the need for some redesign, which is currently underway.

Twelve participants, representing manufacturers and cooperating government agencies from eight countries, attended the semiannual two-week engineering training course held in February, 1976. Applications for the course planned for February, 1977 are now being accepted.

The results of the post-production field trials show substantial-

ly reduced grain losses when mechanical threshers and dryers are introduced into the post-production system. Grain loss was reduced from 29 percent when using the traditional system to 21 percent when mechanized threshing and drying was used. The trials also show that total costs can also be reduced and net returns increased when mechanical threshers and dryers are used.

Industrial extension of IRRI designs made significant progress this period with the addition of two new subcontractors, and the start-up of the Thailand and Pakistan Industrial Extension projects which are funded by an USAID contract. It is expected that these projects will be fully operational during the third quarter of 1976.

A total of 64,300 machines, which are based on IRRI designs, have been built since the program began in 1965 and of that total approximately 24,900 or 39 percent were built during this reporting period.

The reader will note a format change in this issue which positions the tables and figures immediately following the associated textual material of each section. It is hoped that this new arrangement will improve the readability of the report.

PROGRESS REPORT NO. 22
January 1 to June 30, 1976

The following projects were active during the reporting period:

Design and Development (A. Khan, J. McMennamy)

Steering clutches for 5-7 hp tiller	S. Mahmud
5-7 hp diesel tiller	I. Manalili
6 hp diesel tiller	S. Mahmud
8-12 hp diesel tiller	I. Manalili
Small 4-wheel riding tractor	G. Espiritu
Tubular pump	G. Salazar
Vertical axis windmill	G. Salazar
Liquid injector for lowland rice	N. Navasero
Spot injector for granular fertilizer & insecticide	N. Navasero
Axial flow thresher with oscillating screen	J. Policarpio
Portable axial flow thresher	J. Policarpio
PTO thresher	J. Policarpio
Small oscillating grain cleaner	L. Kiamco
Jet pump design nomographs	J. Samuel

Mechanization Research (D. Kuether)

Compacted soil studies	D. Kuether
Liquid injector evaluations	J. Arboleda
Diaphragm pump tests	J. Arboleda
Moisture meter test	J. Arboleda
Axial flow thresher tests	R. Dayrit

Mechanization Systems (B. Duff)

Production and marketing of power tillers in the Philippines	F. Juarez
Power tiller survey	F. Juarez, F. Cabrales
Alternate field-level rice post-production systems	C. Maranan, L. Ebron, Z. Toquero
Potential of mechanizing upland cropping operations	G. Villaruel

Industrial Extension (S. Barton, A. Khan, J. McMennamy)

Industrial extension subcontract program	J. McMennamy
Manufacturing cost reduction project	N. Langam
Industrial extension project in Thailand	S. Barton
Industrial extension project in Pakistan	A. Khan

DESIGN AND DEVELOPMENT

Steering Clutches for 5-7 HP Tiller

The steering clutch described in Report No. 21 was modified to further reduce the actuating force required to disengage the clutch under load. Most components of the previous design were retained in the new design as shown in figure 1. A compression spring was added to preload the jaw sleeve in the engaged position. Also, two mild steel helix strips having a 10 mm lead were wrapped around the circumference of the sliding jaw sleeve (each helix strip covers 180°).

The steering clutch is disengaged by moving a vertical shaft into engagement with the helix strip. The jaw sleeve cams outward due to axle rotation until the clutch is completely disengaged. To prevent reengagement of the clutch, the vertical shaft drops into a 5 mm deep x 16 mm wide groove cut in the jaw sleeve. This prevents the jaw sleeve from moving inward or outward.

The vertical shaft has a roller from a RC 80 (3/4 inch pitch) roller chain mounted on its end to reduce friction between the shaft and helix strip. The shaft is cam operated by the operator through a motorcycle clutch control cable and lever.

When the clutch lever is released, a compression spring forces the vertical shaft out of the groove, allowing the spring-loaded jaw sleeve to engage the jaws on the final drive sprocket. Actuation effort required by the operator is very small compared with previously reported designs.

Field tests indicate good function, so the new clutch design is being finalized. The new steering clutches can be installed in the existing power tiller design without major modifications.

5-7 HP Diesel Tiller

IRRI has received numerous requests from manufacturers concerning the feasibility of using a diesel engine to power the 5-7 hp tiller. As a result of these inquiries work was carried out to modify the existing 5-7 hp tiller chassis to accept a small diesel engine.

The engine selected was a water-cooled, horizontal type with a continuous rating of 4 hp at 2,000 rpm and a maximum rating of 5 hp at 2,200 rpm. The engine weighs over 3 times that of the gasoline engine normally used on this tiller.

Anticipating mobility and maneuverability problems caused by the added engine weight, it was decided to use large diameter wheels, positioned closer together to decrease steering effort. A star-shaped drum wheel, 71.1 cm in diameter and 25.4 cm wide, was used. There was

a provision for filling the wheel with water to increase traction when working on dry land. The transmission casing was lengthened by about 15.2 cm. The completed tiller weighed about 180 kg (fig. 2).

During initial tests in lowland fields, the machine experienced serious mobility problems. The drum wheels failed to give the needed floating effect and traction was lost when the lugs filled with mud. Balancing was difficult due to the weight shifting to the operator's side when the machine was under load, particularly when using the comb harrow.

Due to the problems encountered in the initial test, the original cage wheel was modified by increasing the lug width from 5 to 7.6 cm, and the transmission reverted back to the original design. Except for the repositioning of the engine support for improved balance, no other changes were made (fig. 3).

The machine was tested in both flooded and non-flooded, but moderately soft field conditions, and performance was satisfactory. The bogging down and balancing problems noted in the initial test were practically eliminated. The machine is now being extensively tested in farmers' fields to compare its performance from the standpoint of fuel economy, efficiency, and ease of handling with that of the gasoline powered unit.

6 HP Diesel Tiller

A power tiller was developed using an imported transmission and 6 hp diesel engine (fig. 4). The objective of this project was to provide a low-cost interim solution to the demand for features such as steering clutches and multiple speeds. By employing an imported transmission with these features and tailoring the design for the engine mount, controls, and implements to local production capabilities it is possible to make available a relatively sophisticated power tiller with only a modest investment in local manufacturing facilities. The transmission has four forward and two reverse speeds with the following speeds:

F1	1.4 km/hr	R1	0.90 km/hr
F2	2.5 km/hr	R2	3.96 km/hr
F3	6.0 km/hr		
F4	10.8 km/hr		

Power is transmitted from the engine to the transmission through a belt drive. An idler pulley actuated by the operator through an over center linkage mechanism functions as the engine clutch.

IRRI designed implements can be fitted to this power tiller and a center drive rotary tiller was also designed for this machine. The

rotary tiller was 65 cm wide with six-bladed, 38 cm diameter rotors operating at 250 rpm. We found that the 6 hp engine was not sufficient to power a rotary tiller of this size in most conditions. The blades per rotor were reduced from six to four with all other dimensions retained. The engine can now adequately power the machine under most field conditions.

This machine is undergoing endurance and additional performance testing.

8-12 HP Diesel Tiller

It was reported in Report No. 20 that the 8-12 hp power tiller prototype using a gear box fabricated at the IRRI shop was completed and tested. Drawings for this design were released to several manufacturers for trial production. These manufacturers experienced considerable difficulty in obtaining the close tolerances and heat treatment required in the transmission.

In view of this, it was decided to revive the original plan of using a standard jeep transmission. This type of transmission is available in several LDC countries at a reasonable price. The use of this transmission in the 8-12 hp tiller was earlier discontinued because of difficulty in attaining satisfactory range of speeds.

Chain and sprocket speed reduction units were used on the input and output side of the jeep gear box to obtain better speeds. Power is taken from the engine pulley through a belt driven friction disc clutch mounted on the first countershaft. This shaft is supported by bearings mounted on two plates which also support the jeep gear box. The side covers enclosing the chain and sprocket reduction units are also bolted to these side plates giving the unit a clean appearance (fig. 5). The rotary tiller is driven from the gear box input shaft.

The jeep transmission has three forward speeds and one reverse. The travel speed in first gear is about 2 km/hr, which is suitable when working in difficult field conditions. Second gear is a little over 3 km/hr, a speed frequently used for tillage operations on lowland farms. Third gear, with a speed of 5.34 km/hr, is used for transport. The rotary tiller rotates at 245 rpm, which is a common speed on rotary tillers of this size. To permit the convenient use of other implements, such as moldboard plows or transport trailers, a provision for easily detaching the rotovator assembly was added. It is equipped with steering clutches so handling and maneuvering is relatively easy, even in flooded fields.

Preliminary tests showed satisfactory field performance. Endurance testing is continuing.

Small 4-wheel Riding Tractor

Fabrication of the prototype tractor described in Report No. 21 was completed in March and it was tested with a 1.37 m wide rotary tiller (fig. 6). The rotary tiller weighs 100 kg, which is relatively light compared with European and Japanese units.

The tractor will be used for both lowland and upland operations; however, our attention is focused on its performance in lowland because of the possibility of bogging down and deepening of the soil hard pan under continuous cultivation. Durability testing will also be conducted in upland fields to subject the power train to higher loads.

Initial field tests uncovered several weak points in the drive train that have been redesigned and are currently being tested.

Tubular Pump

Report No. 21 stated that a tubular pump with a central container was being fabricated to determine the minimum volume of stored water necessary for pump self-priming for a given suction pipe size and lift. The pump was tested at different suction lifts, from 1.2 m to 4 m. At 4 m lift, the pump delivered only 8 l/min at abnormally high rotating speeds. This was due to an inability to exhaust air from inside the pump. At 3.7 m, the calculated ratio of central storage container and delivery arm volume to that of the total volume of air in the suction pipe (V_w/V_a) is approximately three. Power requirement, capacity, and efficiency were recorded during the tests. A maximum efficiency of 16 percent was obtained at 3.7 m lift.

To determine the relationship between the pump diameter, speed, and lift, three different sized tubular pumps were fabricated and tested. Tubes of 19 mm, 25 mm, and 32 mm diameter and 0.3 m radial arm length, without central and outer containers, were tried, using a footvalve. The three pumps produced the same results and it was found that flow starts at a speed governed by the formula:

$$N_s = \frac{84.55}{D} \sqrt{H}$$

where: N_s - speed in rpm when water starts to flow

H - total head in meters

D - peripheral diameter in meters

Maximum efficiency occurred at $N_d = 1.30\ N_s$ for all sizes.

where: N_d = optimum operating rpm

A 25 mm-0.3 m tubular pump with footvalve powered by a Savonious windmill was installed in the field (fig. 7). The pump frequently lost its prime due to the entry of dirt through the inlet. A fine nylon screen was installed at the entrance channel but the pump lost its prime again after several days. Inspection found that weed seeds were imbedded in the valve seat. Based on this experience, it seems that foot valves are only suitable for clean water.

A self-priming tubular pump with storage containers appears suitable for lifts up to 2.4 m. A self-priming reciprocating piston pump will be fabricated and tested in applications requiring 1.2 to 6.0 m lifts.

Vertical Axis Windmill

Development of a Savonious rotor windmill continues. It was felt that the tower which supports the windmill-pump assembly could be simplified by using a light gage tube to serve both as the structural support and the rotating shaft. The top and bottom plate of the rotor which were formerly circular in shape, were modified by making them elliptical to economize on materials (fig. 8). An octagonal tube, 107 mm across the flats and 6.1 m long, was made from 1 mm thick G.I. sheets. The windmill assembly was supported by three 7.9 mm diameter x 15.0 m guy wires and coupled to a 25 mm-0.3 m tubular pump with a V-belt drive. Preliminary tests showed that it started pumping water at a wind speed of 9.6 kph against a 1.2 m suction lift. The tubular shaft broke at its midsection during a typhoon, so it was decided to replace the octagonal tube with 10 mm diameter x 3.0 mm wall G.I. pipe. It is estimated that this new design can withstand winds up to 150 kph. Tests will be conducted on the output of the windmill-pump combination, using a 75 mm parshall flume and a water level recorder.

Liquid Injector for Lowland Rice

The lightweight, two-row, liquid injector for lowland rice described in Report No. 21 was further developed and tested. Efforts were made to develop a flow indicator and a regulator to control the discharge rate of the liquid from the nozzle.

Rate of discharge by gravity depends on the height difference between the level of liquid in the back-pack container and the nozzles. As the container empties a height difference of about 30 cm from full to almost empty occurs which causes a change in the flow rate of about 20% of typical nozzle sizes and heights of the container.

An auxiliary container was attached to the handle of the injector to obtain lower flow rates without reducing orifice sizes. An

almost constant flow rate can be attained by maintaining a constant level in the auxiliary container, regardless of the liquid level in the main tank. During our tests the flow from the tank to the auxiliary container was manually controlled with the stopcock on the tank, but a simple float valve is being designed to automatically control the liquid level in the auxiliary container.

The flow of the solution through the nozzles could not be detected unless they were withdrawn from the mud. This worried operators, so a flow indicator was installed to make the flow visible at all times. It consists of a 3/8" I.D. transparent plastic tube fitted to the injector with rubber stoppers on each end (fig. 9).

Further studies will concentrate on the development of an adjustable regulator. Development of a multi-row liquid injector which can also be used as a planting guide for transplanting while applying the chemical is planned. This device could also be used for injecting fertilizer in straight row transplanted lowland rice.

Spot Injector for Granular Fertilizer and Insecticides

A device for applying granular chemicals by spot injection is being developed. The prototype of this device was fabricated, consisting of a hopper with two 12.7 mm diameter nozzles, each fitted with a 9.5 mm diameter rod extending above the hopper (fig. 10). A handle is connected to the upper end of the rods and its movement is limited, so when the handle is lifted, the rods are withdrawn from the nozzles, and when pushed down they slide through the nozzles and about 13 mm beyond their end.

This prototype was used to apply urea granules in a wet paddy field. Granules flowed out through the clearance between the rod and the nozzles, except when the injector was held in an inclined position. Wetting of the nozzle stopped the granules from flowing. The injector worked propertly in conditions where the rods could easily push wet granules through the nozzles. When working on harder mud surfaces, the nozzle clogged with compacted fertilizer due to mud entering the nozzles.

The design was modified to prevent water and mud from entering the nozzles when it was pushed into the mud, by using two rods working inside a single tapered nozzle with an opening slightly larger than the diameter of the rod (fig. 11). The upper end of each rod was pinned to a lever with its central pivot on the main handle.

This modified prototype is operated by rocking the cross lever about its central pivot, causing the two rods to enter the nozzle alternately. While one rod is extended through the nozzle opening, the

other is completely withdrawn. The nozzle penetrates 6 to 10 cm into the soil depending on soil hardness and pushing force. Due to the pushing impact, the fertilizer is forced to occupy the space within the nozzle. Withdrawal of the extended rod leaves a cavity in front of the nozzle opening while the other rod simultaneously pushes the fertilizer into the cavity.

The injector was field tested and worked without difficulty in both upland and lowland except in areas with standing water. It was used to inject urea fertilizer near corn plants, and it took about 15 hours to inject 116.7 kg of urea in a one hectare corn field. Metering is relatively accurate. Some spots injected with fertilizer were carefully opened to observe the manner of deposition. The deposited granules appeared somewhat pelletized, especially in hard soils.

The device will be subjected to further test to determine its rate of application, capacity, efficiency, ease of operation, and other pertinent information.

Axial Flow Thresher with Oscillating Conveyor

The design features of this thresher were described in Report No. 21. The machine was field tested and subsequent modifications resulted.

Cost and weight reducing improvements were made to the thresher. The C-channel frame members used in the original design were replaced with standard 2-inch angle irons. Angle iron is less expensive and more readily available in most countries. The width of the frame was reduced from 91.5 to 78.8 cm. Based on test results, the adjustable louvers were fixed to the maximum position for higher capacity. The L-shaped rocker arm, which drives the oscillating tray, was replaced with a cross-belt driven eccentric driven from the threshing drum shaft. The belt transmission arrangement was changed to eliminate two pillow block bearings, two pulleys, a belt, and a 25 mm diameter shaft (fig. 12).

The 5 degree slope of the non-perforated conveying portion of the tray was eliminated and the slope of the perforated screen section was made adjustable. A screw, on the discharge side, regulates the slope of the screen. Diagonal louvers were placed at the rear of the non-perforated portion to help distribute the threshed material evenly as it transfers to the screen.

Drawings have been sent to several interested manufacturers. It is expected that manufacturers will shift to the production of this thresher because of its lower cost and simplicity.

Portable Axial Flow Thresher

In most phases of lowland rice production, mobility of farm machinery is a major problem. Trailer and tractor mounted threshers encounter difficulties in negotiating soft fields so they are usually stationed on hard ground near the field, where the threshing is done.

Present portable threshers require at least four men to carry the machine to the field. Since levees are only wide enough for one man to walk, four people have difficulty carrying the threshers.

A portable axial flow thresher (fig. 13) was developed during the reporting period. The thresher can be used as a hold-on or throw-in thresher. The thresher weighs 75 kg, including a 3-hp air-cooled gasoline engine. It has a 30 cm diameter x 71 cm long pegtooth threshing drum. The drum is made of thin sheet metal, stiffened by annular beads beside the pegteeth. Woven wire mesh is used for the lower concave and spiral louvers are provided inside the top cover. Light gauge angle iron and G.I. sheets are used for the framework. The legs supporting the thresher fold to provide handles during transport.

Initial tests of the thresher indicate an output of up to 3/4 ton/h with grain separation loss of less than 2 percent for throw-in threshing. For hold-on, it can thresh about 1/4 ton/h with grain loss of 2 percent. Two men are required to operate and carry the thresher.

Semiannual Report No. 14 reported that the length of the threshing drum cannot be reduced from 203.2 cm without incurring excessive grain separation loss. In the first prototype of the original axial flow thresher, the drum was shortened to 122 cm, although two concaves were provided. In subsequent revisions of the thresher, it was observed that the upper concave could be eliminated and the grain loss is still within acceptable levels.

The threshing drum of the portable thresher is 71 cm long but several features were added to offset the effects of the short drum. The effective concave open area was increased by using woven wire mesh. A more vigorous threshing action was obtained by decreasing the distance between pegteeth from 6.5 to 5 cm. Retention time of material in the chamber is about the same as the larger thresher since it has the same number of louvers on the top cover.

Threshed material falls from the concave to the ground. In order to keep the weight and cost low, the thresher has no cleaning mechanism. Farmers prefer hauling grain from the field to carrying the whole paddy to the threshing site. According to studies reported

in Semiannual Report No. 16, the grain loss in handling paddy from the field to the threshing area is 2-7 percent. These losses can be minimized if threshing is done in the field.

Comprehensive testing is planned to determine the thresher's performance and durability. The estimated manufacturing cost of the thresher is about 20 percent that of the regular axial flow thresher with a cleaning system.

PTO Thresher

The previously reported design was modified to replace the second rotary screen and the conical outer cylinder with a flat, full length oscillating conveyor. The first rotary screen was retained because it moves a major portion of the straw to the thrower housing. Threshed material falls on a solid portion of the conveyor tray and is conveyed towards the other end which is perforated. As the grain falls through the perforated screen, it is winnowed by the suction draft from the straw thrower. Short straw continues to move towards the thrower opening. The cleaned grain falls on an inclined, oscillating discharge trough.

Tests reported an output of 1700 kg/h with a grain loss of 3 percent. Although the purity has improved to 97.5 percent, the capacity was less. This was attributed to an overloading of the oscillating conveyor. Space restrictions limit the size of the conveyor in the present prototype.

It appears that the thresher's best potential is in Pakistan and other areas where a large number of four-wheeled tractors are used. The prototype thresher was shipped to the industrial extension project at Islamabad, Pakistan, where development work will continue.

Small Oscillating Grain Cleaner

The small oscillating grain cleaner described in Report No. 21 was simplified by combining the eccentric drive with the blower drive. Eccentric journals which impart an oscillating motion to the screen through push rods, were machined on both ends of the blower shaft (fig. 14). The 7.5 kg dynamic balancing counterweight which was mounted below the screen was removed. A major portion of the oscillating screen imbalance was balanced by increasing the weight of the blower blade opposite the eccentric throw by .13 kg. The imbalance force of the screen is approximately in the plane of screen motion and the imbalance of the blower is radial about the blower's axis of rotation. Therefore, it is possible to balance only 60% of the screen exciting force with the blower, but horizontal exciting forces are less desirable than vertical exciting forces in a machine structure.

Preliminary tests indicate that these modifications work satisfactorily. The change in the eccentric drive arrangement eliminated one bearing, two sheaves, one belt, and the eccentric shaft. The balancing revisions reduced the weight of the cleaner by 10 kg. A production prototype will be fabricated following performance tests of the experimental prototype.

Jet Pump Design Nomographs

Experimental investigations on the application of the water jet pump principle to increase the discharge capability of medium and high pressure pumps were carried out in the Department during 1973-75. This study, reported in Report No. 18 through 20, showed potential for the use of low-cost water jet pump attachments in improving the discharge performance of existing pump installations utilized in rice irrigation and drainage.

However, a problem in the commercialization of such jet pump attachments is that each attachment has to be designed for a particular primary pump and pumping condition. Local manufacturers were hesitant to carry out the necessary computations involved in the design procedure, although it requires the use of only a slide rule or a desk calculator. Therefore, the design procedure has been simplified and important physical parameters are obtained through the use of nomographs and tables.

As background information it may be stated that the jet pump (fig. 15) is a device by which energy of a higher pressure liquid can be transferred to a lower pressure liquid by turbulent mixing so that the two liquids can be delivered at some intermediate pressure. The figure also shows the pertinent dimensions for matching to a particular primary high pressure pump. The main characteristics of the jet pump are expressed in three ratios:

$$\text{Capacity ratio } (M^*) = \frac{Qs + Qp}{Qp} = \frac{\text{Jet pump discharge}}{\text{Primary pump discharge}}$$

$$\text{Head ratio } (N^*) = \frac{Hd - Hs}{(Hp - Hs)} = \frac{\text{Jet pump total head}}{\text{Input head}}$$

$$\text{Area ratio } (R) = \frac{An}{At} = \frac{\text{Nozzle tip area}}{\text{Throat area}}$$

A schematic of an installation with a jet pump attachment for low lift pumping is shown in figure 16. In actual installations it is more convenient to use minimum suction lift since the whole system will be pressurized and possible leaks will be more easily detected.

In the design of an attachment it is assumed that the known quantities are the best efficiency head (Hb) and capacity (Qp) of the existing installation (primary pump), and the actual pumping height (h) at site. From these quantities all pertinent dimensions of the jet pump attachments can be determined from figures 17 through 19 and Table 1. The nomographs are prepared on the assumption Hn = Hb - Hf = 0.75 Hb where Hf is the friction loss in the primary pump piping up to the main nozzle. Hd - Hs = 1.25h to account for the friction losses in the suction and delivery pipe of the jet pump attachment.

Using the known values of Hb and h, both N* and M* can be located from figure 17. Values of Qp and Hb are then utilized in figure 18 to obtain the nozzle tip area An. Figure 19 finally gives the values of At, Dt, R and Dn by using the values of An and N* from the previous two nomographs. Optimum values of the rest of the dimentions are given in Table 1. A sample problem shown in Table 1 and plotted on the nomographs, further illustrates the procedures.

Many design configurations can be used in the actual installation of the jet pump attachment. For example, the unit can be installed above or below water depending on site and installation requirements. When fabricated from 16 gauge G.I. sheet metal, the attachment would be lightweight and low cost. The concept should find extensive application in salvaging the power loss associated with many existing pumping installations presently used for rice irrigation and drainage.

Table 1. Recommended jet pump proportions for low lift pumping and sample problem.

Physical Proportions	Recommended Values
1. Nozzle throat distance (s)	1 - 1.5 Dt
2. Throat length	5 - 6 Dt
3. Main nozzle profile	
a) shape	Conical
b) included angle	10°
4. Throat entrance profile	
a) shape	Conical
b) included angle (θ)	Above 60°
5. Diffuser profile	
a) shape	Conical or Bellmouth
b) included angle (B)	5 - 7.5°

Sample Problem

Given : Primary pump best efficiency head (Hb) = 150 feet
Primary pump best efficiency capacity (Qp) = 150 gpm
Final pumping lift (h) = 10 feet

Find : Dimensions required for a matching jet pump attachment.

Answers: 1) Referring to figure 17:

Head ratio (N*) = 0.13
Capacity ratio (M*) = 3.35

2) Referring to figure 18:

Nozzle tip area (An) = 0.59 in^2

3) Referring to figure 19:

Nozzle tip dia. (Dn) = 0.875 in
Nozzle-throat ratio (R) = 0.117
Throat area (At) = 5.1 in^2
Throat diameter (Dt) = 2.5 in

4) Referring to Table 1:

Nozzle throat distance (S) = 2.5 - 3.75 in
Throat length (L) = 12.5 - 15 in

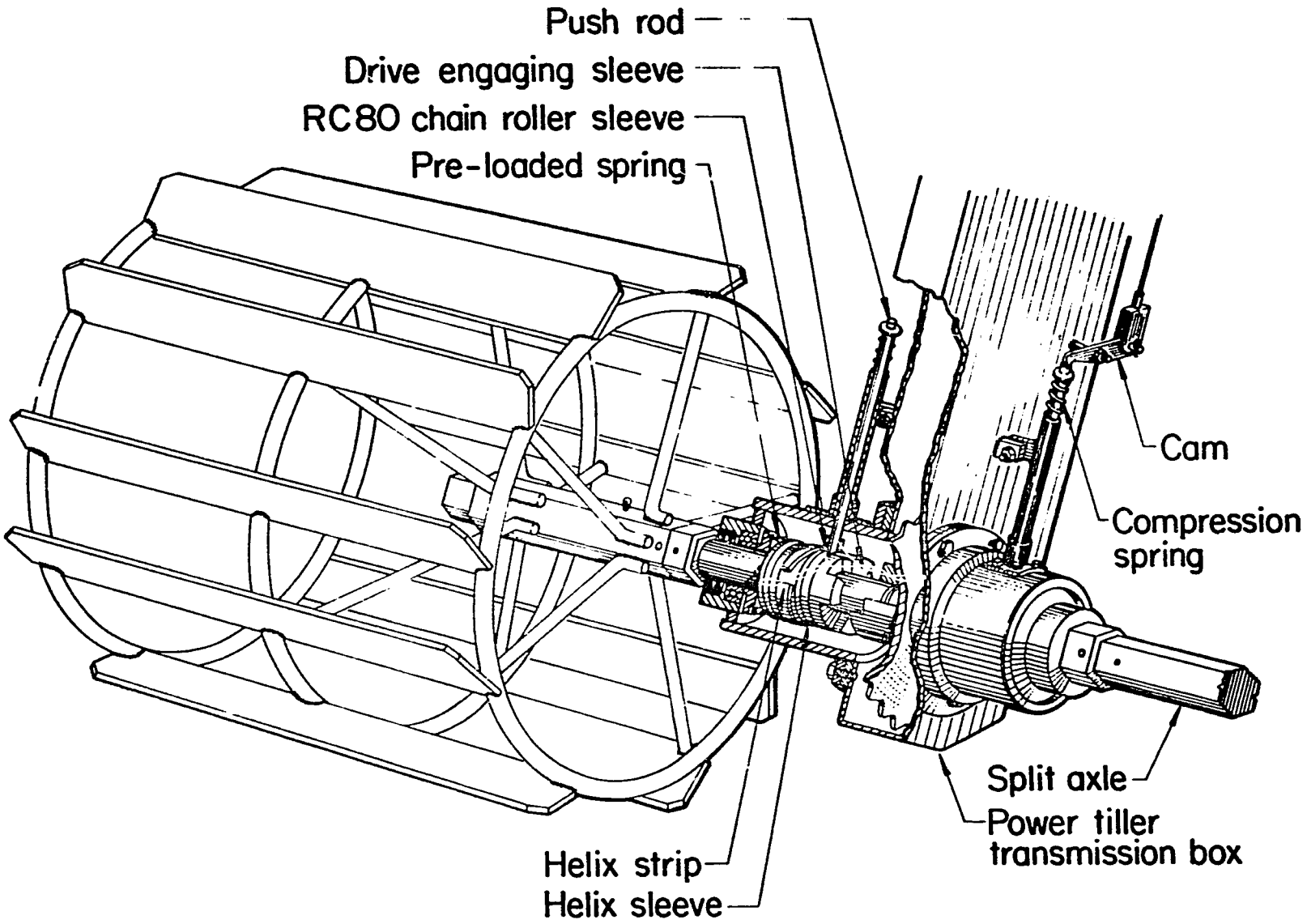

Fig.1 Enclosed helical steering clutch.

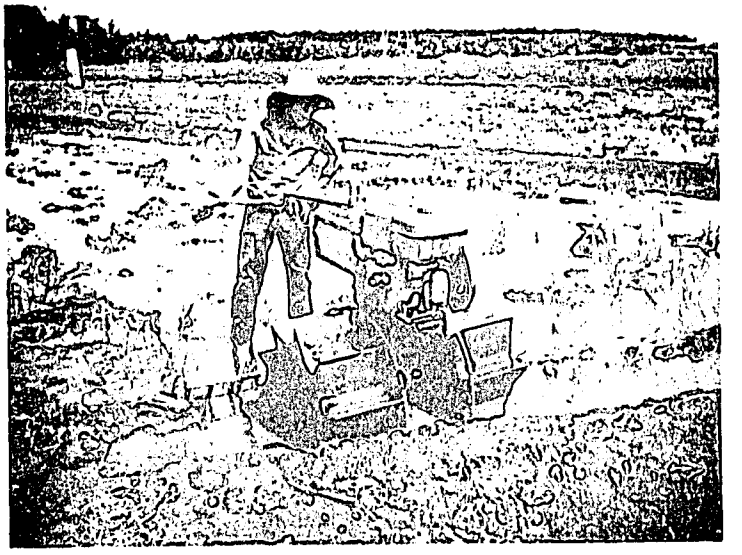

Fig. 2 Diesel tiller with star wheels.

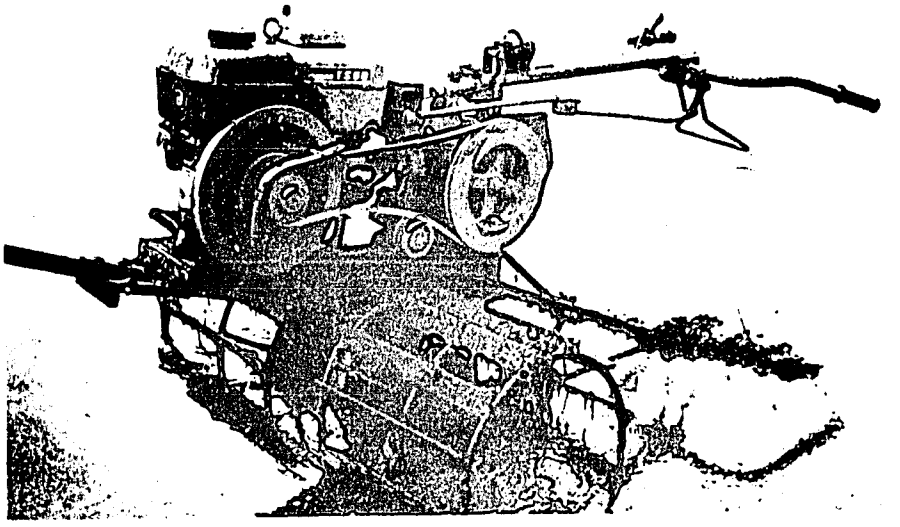

Fig. 3 Diesel tiller with cage wheels.

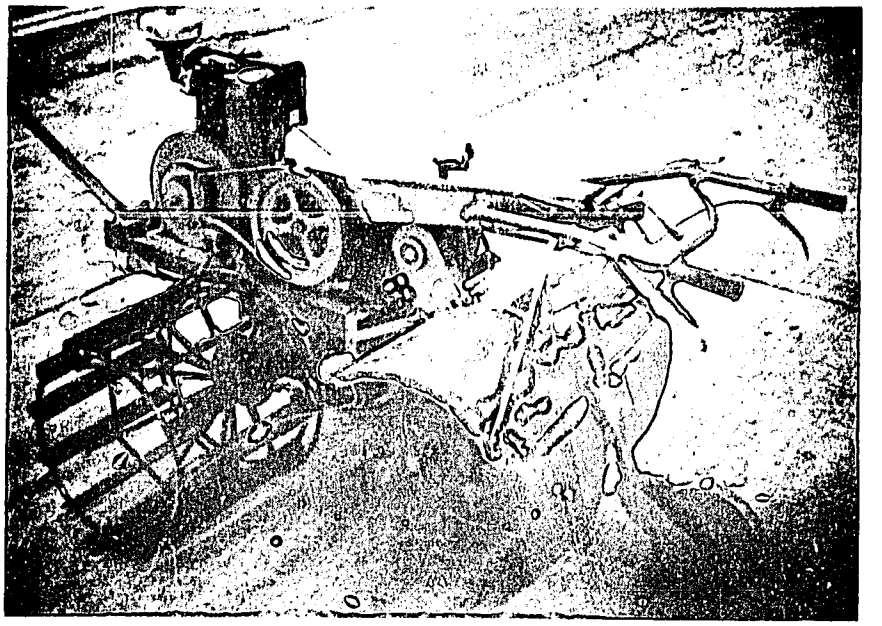

Fig. 4 6 HP diesel tiller.

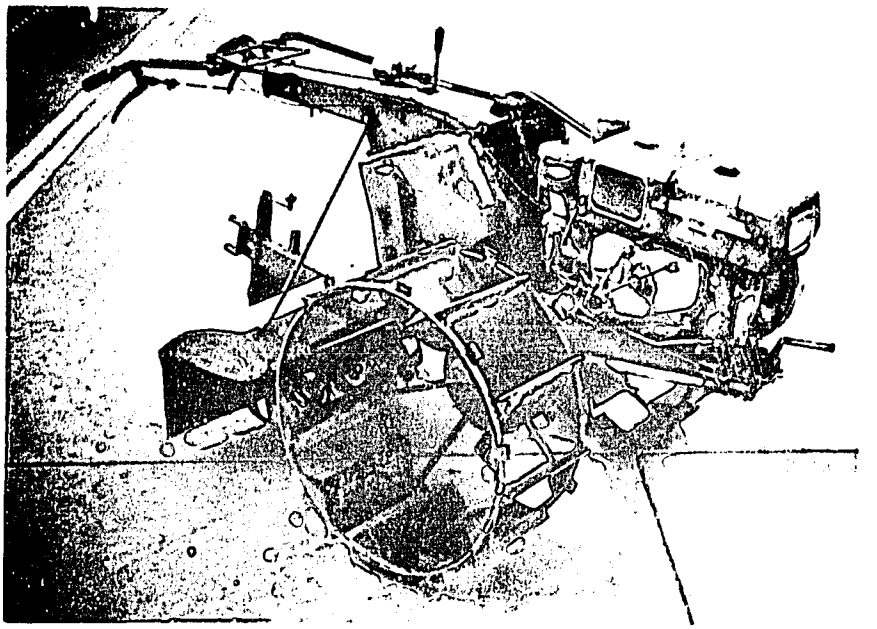

Fig. 5 8-12 HP diesel tiller.

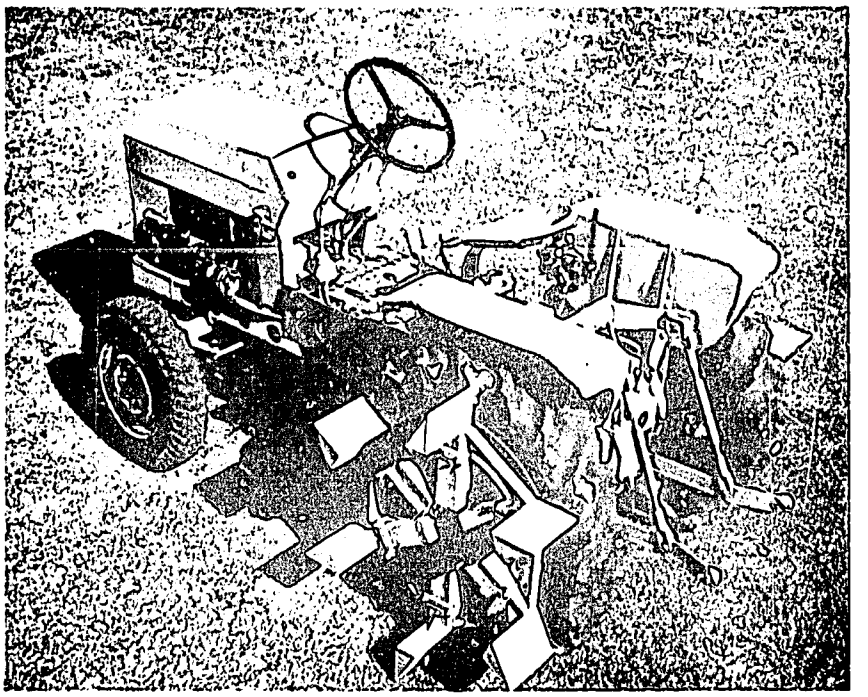

Fig. 6 4-wheel riding tractor.

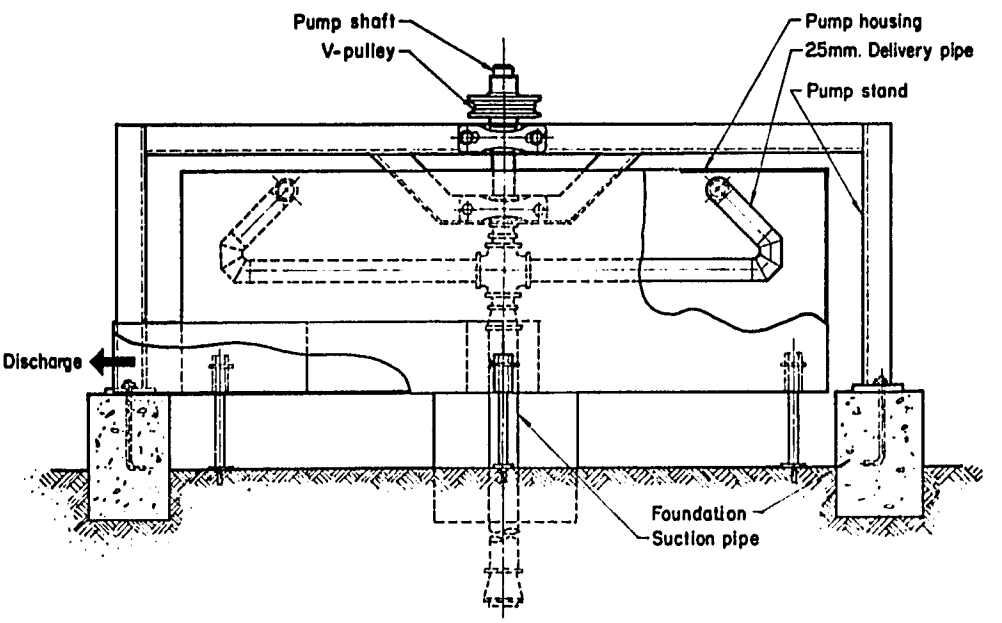

Fig. 7 Tubular pump.

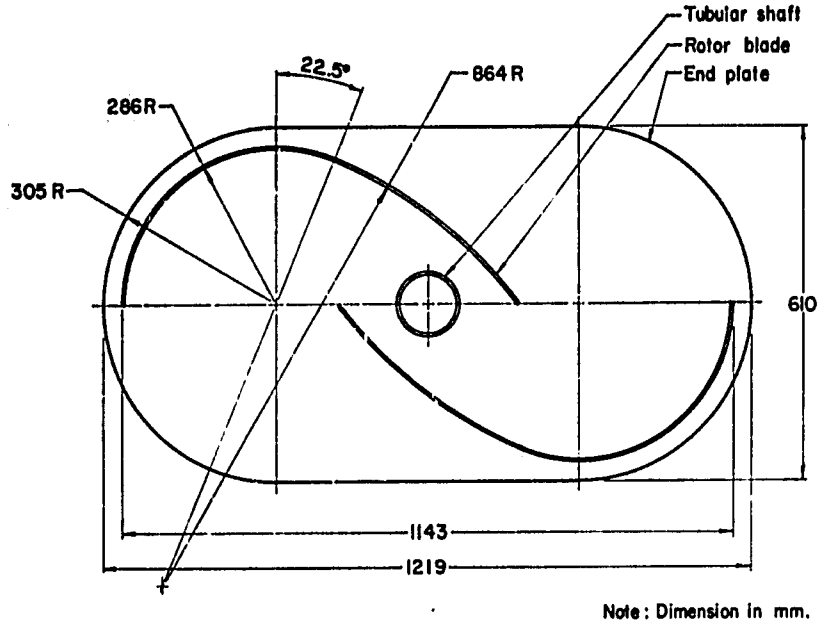

Fig. 8 End view of Savonius windmill.

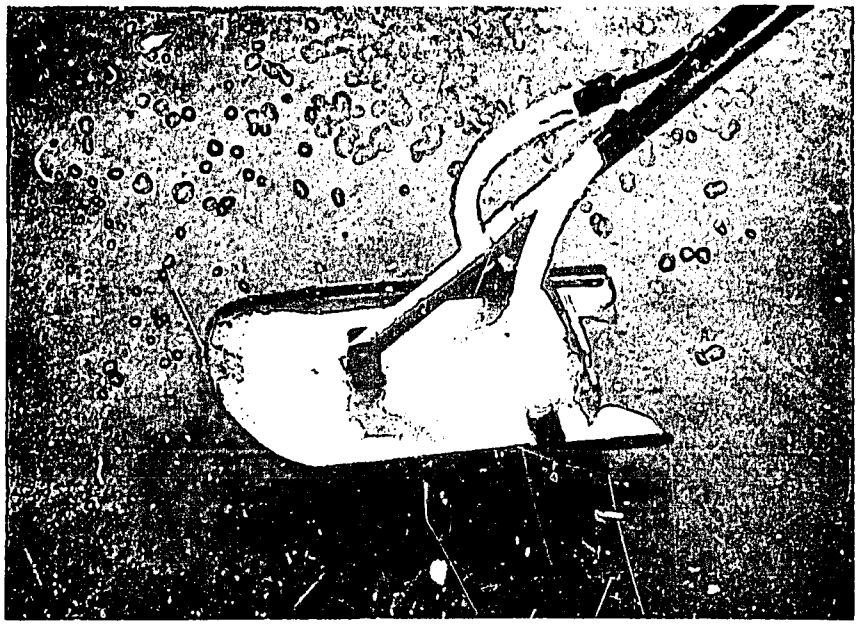

Fig. 9 Liquid injector for lowland rice.

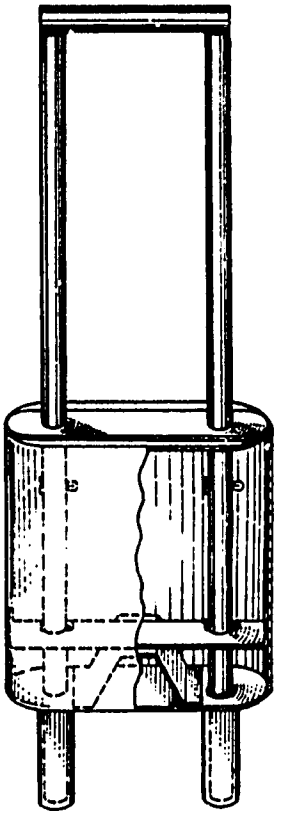

Fig. 10 Spot injector for granular chemicals (single rod).

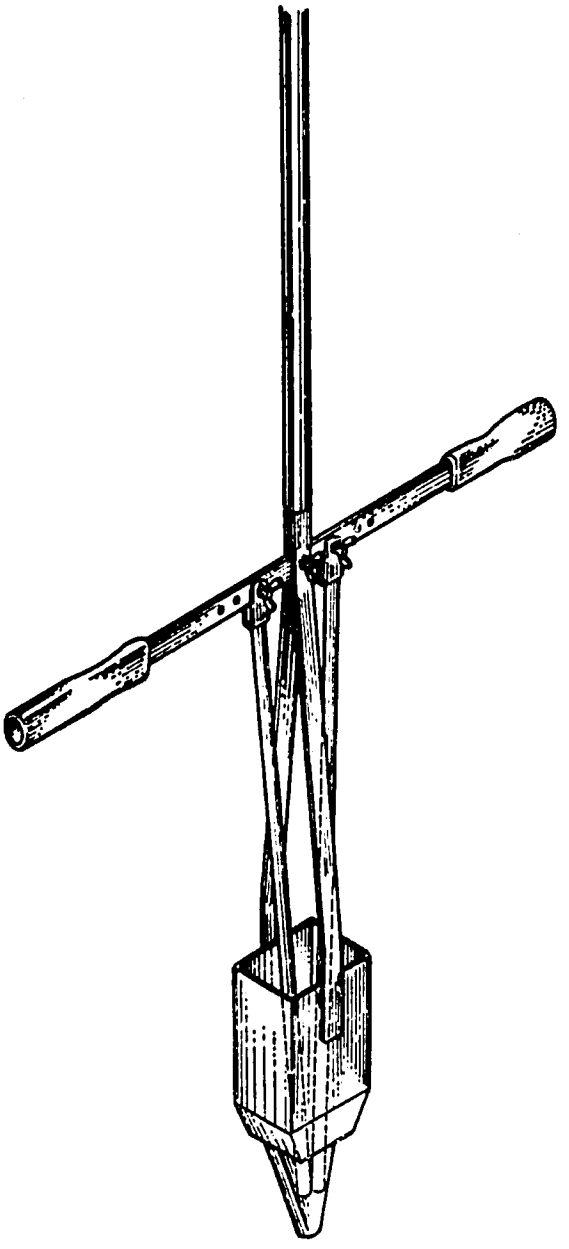

Fig. 11 Spot injector for granular chemicals (double rod).

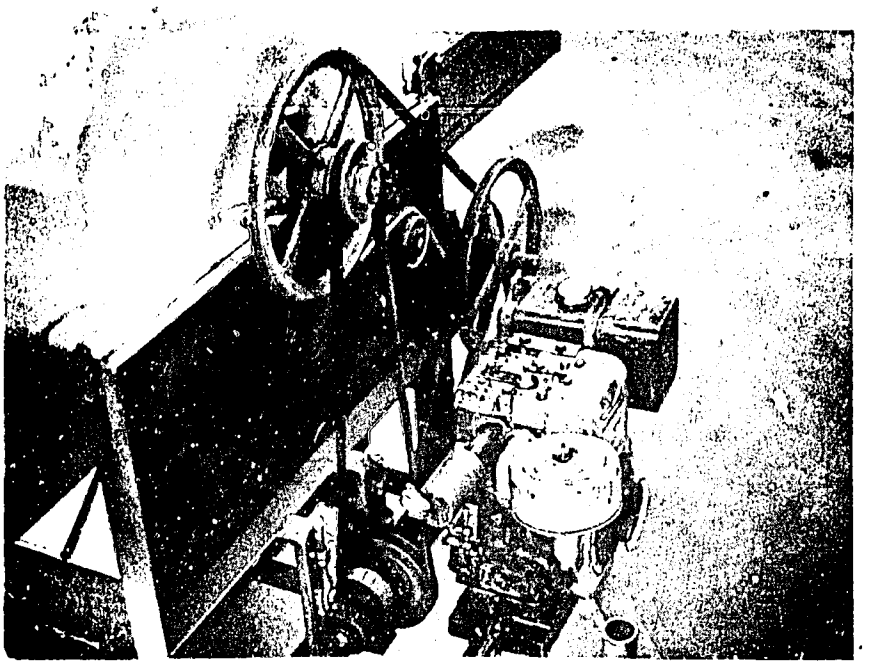

Fig. 12 Axial flow thresher belt arrangement.

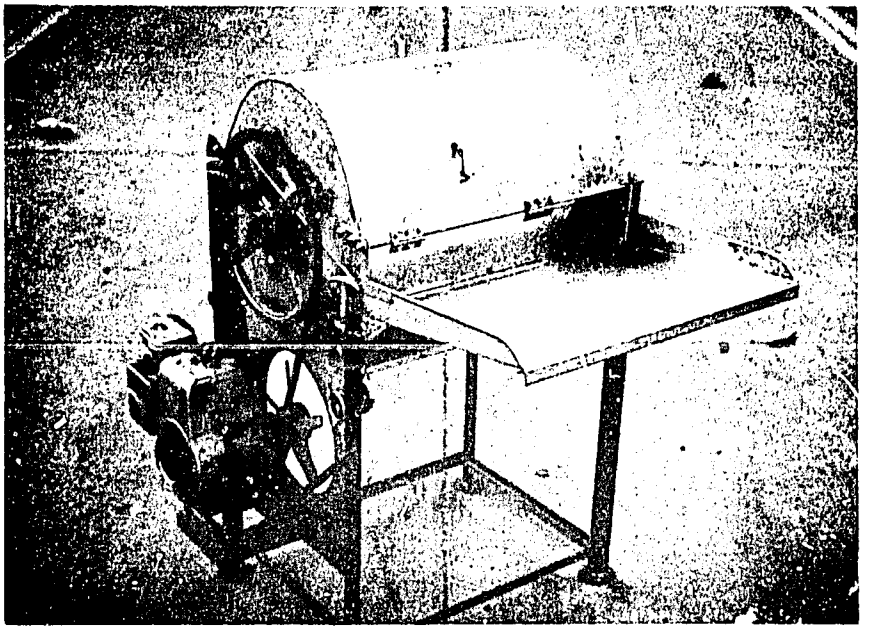

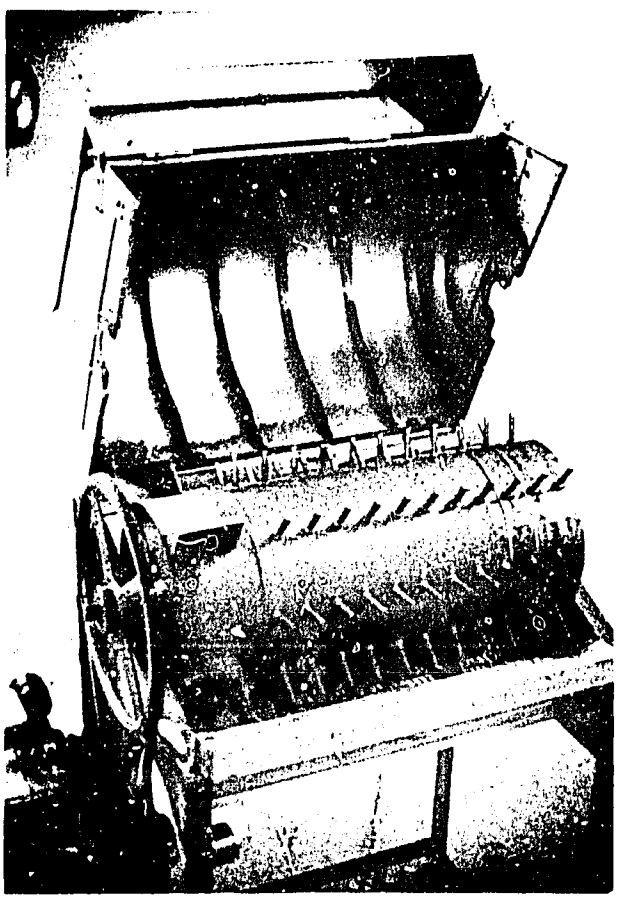

Fig. 13 Portable axial flow thresher.

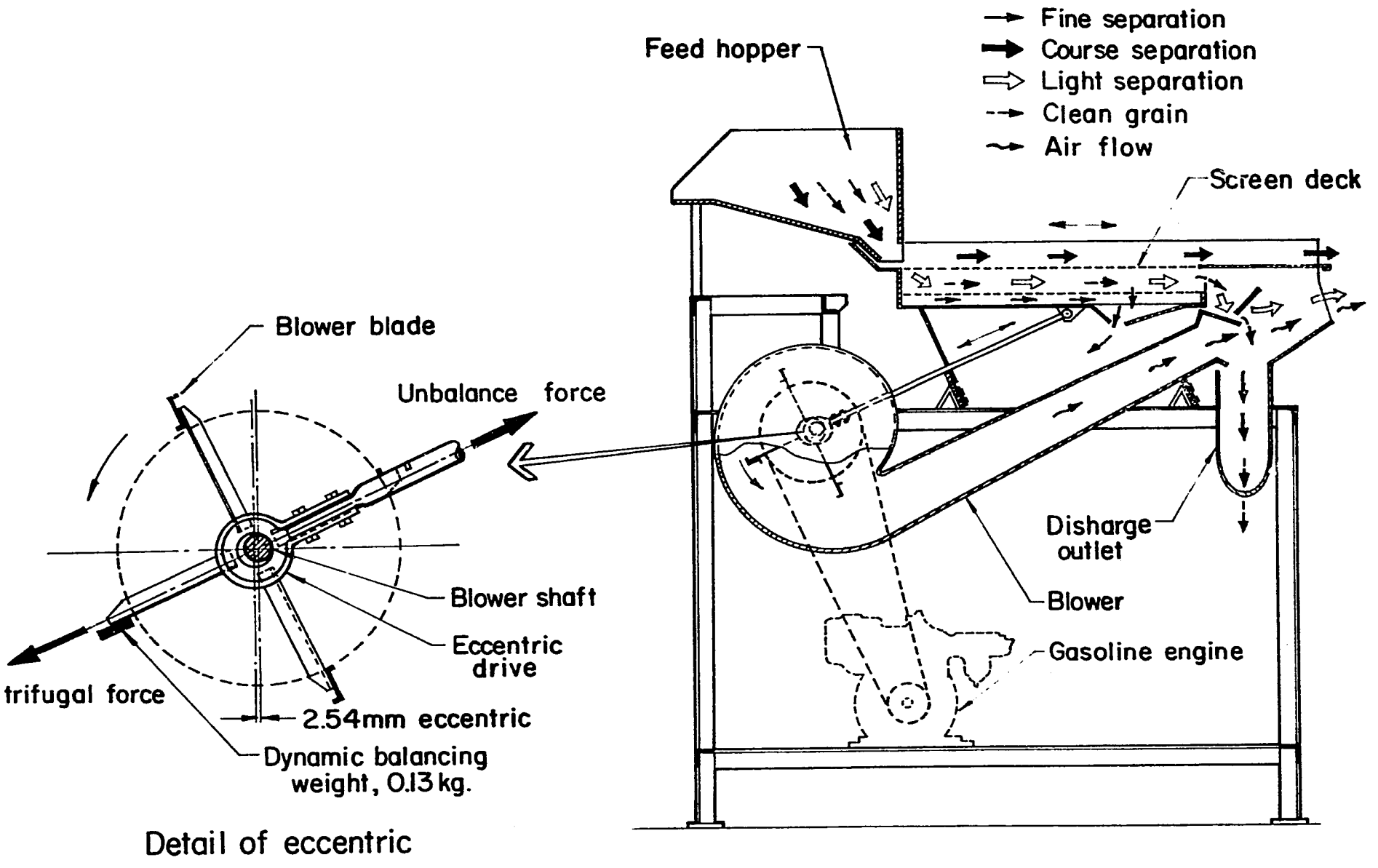

Fig. 14 Small oscillating grain cleaner.

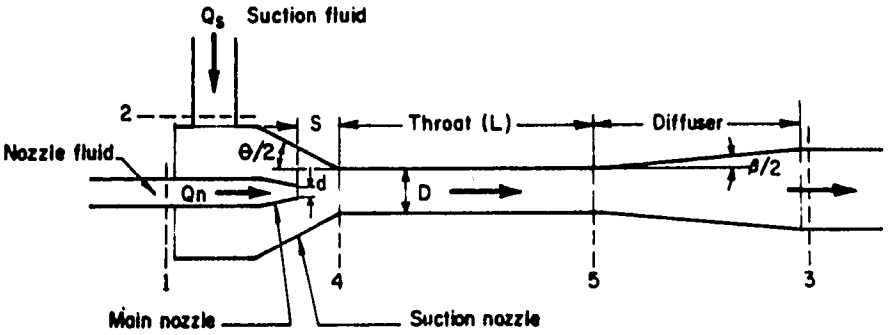

Fig. 15 Jet pump.

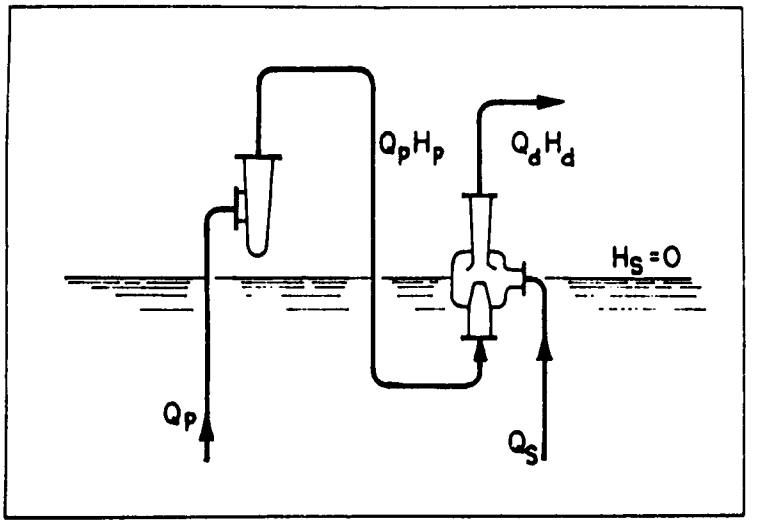

Fig. 16 Jet pump in low lift installation.

$$N^* = 1.667 \frac{h}{H_b}$$

$$M^* = \frac{1.43 \left(\frac{N^*}{1.05}\right)^{.021}}{1.5 \left(\frac{N^*}{1.05}\right)^{1.531} + \left(\frac{N^*}{1.05}\right)^{.510}}$$

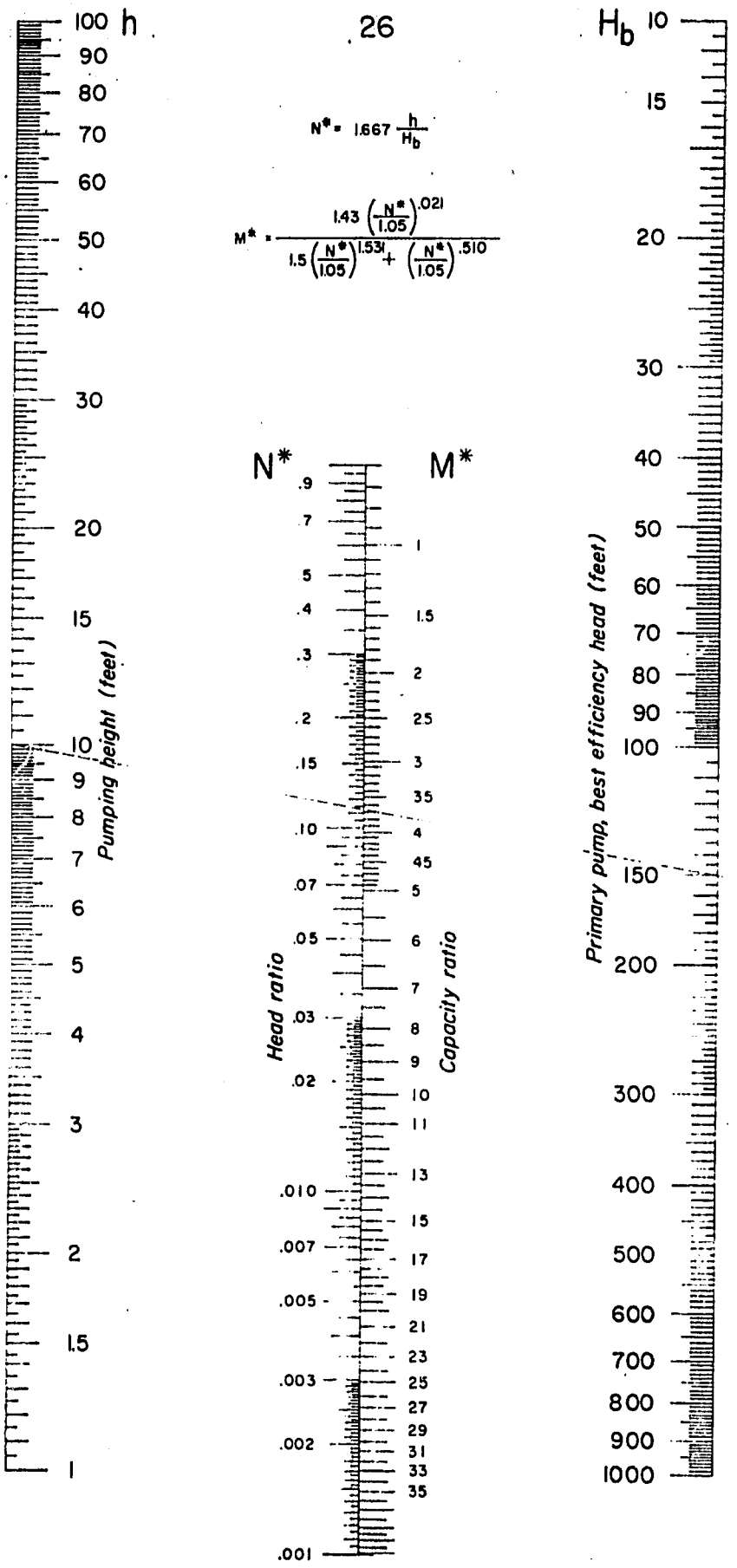

Fig. 17 Nomograph for head and capacity ratios of water jet pump

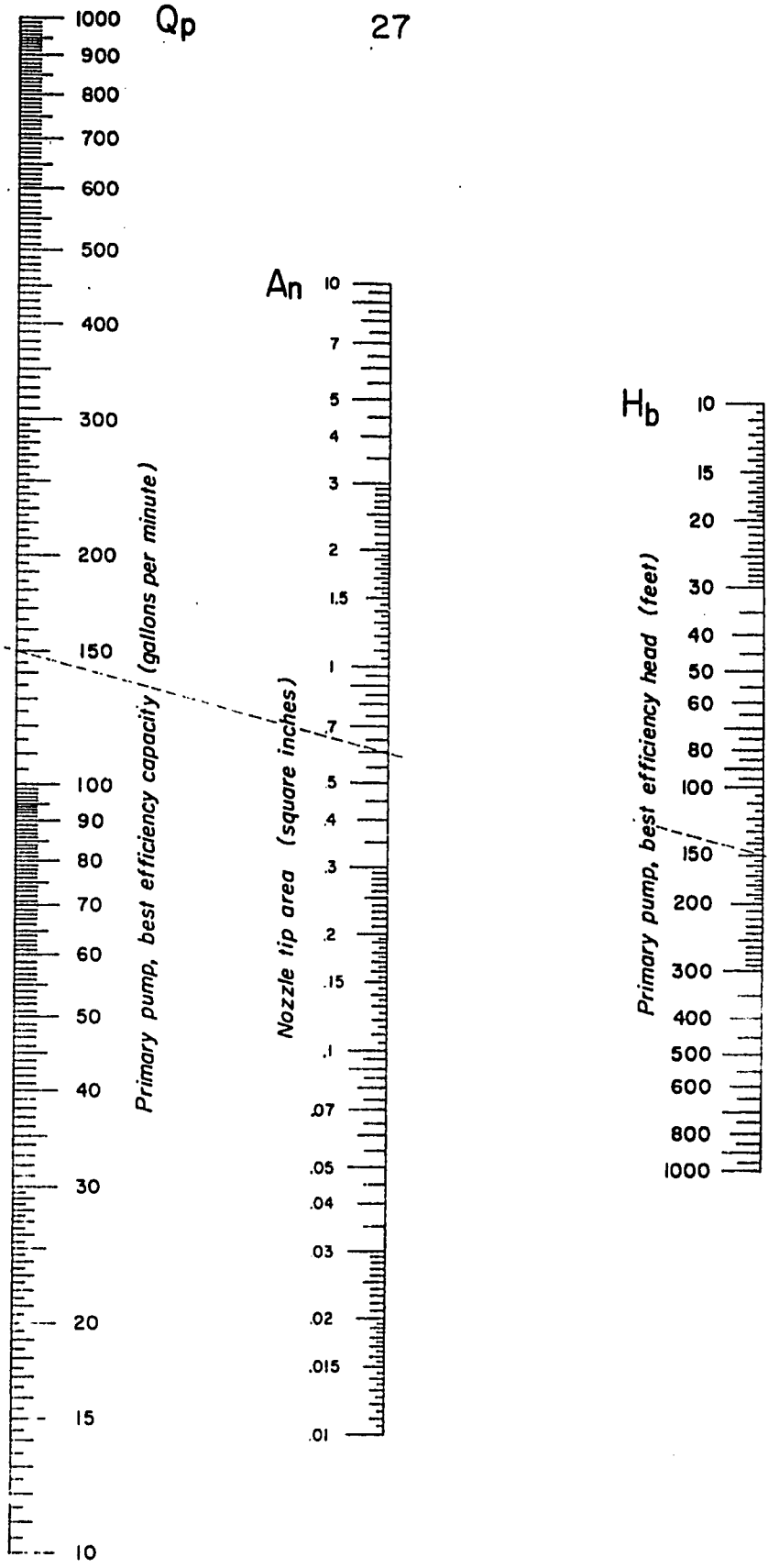

Fig. 18 Nomograph for nozzle size of water jet pump

$$A_n = .049 \frac{Q_p}{(H_b)^{.5}}$$

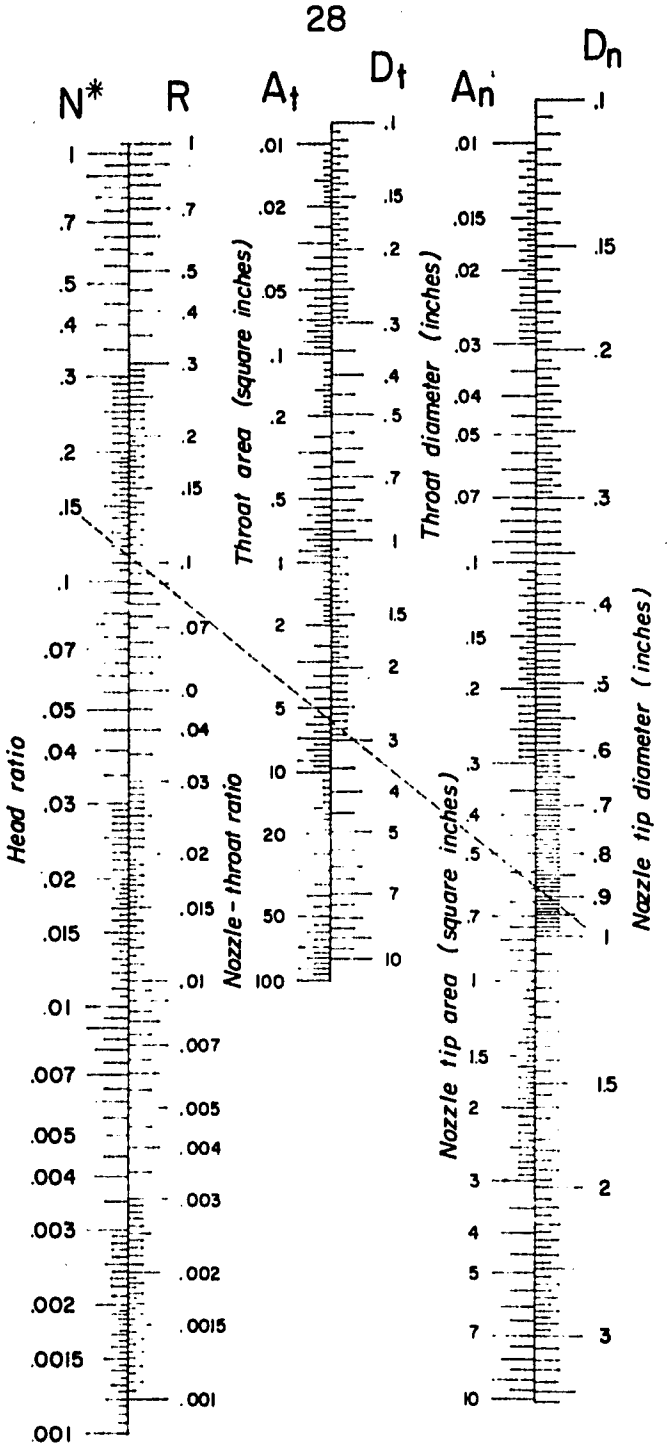

Fig. 19 Nomograph for nozzle-throat ratio and throat size of water jet pump

$$R = \left(\frac{N^*}{1.05}\right)^{1.021} \qquad R = \frac{A_n}{A_t}$$

MECHANIZATION RESEARCH

Compacted Soil Studies

This study was initiated to determine the effects of various tillage systems on the change in depth of the compacted layers in continuously cropped wetland rice soils. The research is being conducted in adjacent plots on the IRRI station, and is now in the seventh cropping season.

It can be observed that the depth at which penetrometer readings of 2.46 kg/m^2 and 4.92 kg/m^2 (35 and 70 psi) were encountered has increased at a faster rate in the plot where the 4-wheel tractor has been used (fig. 20). During tillage for the fifth crop, the 4-wheel tractor bogged down in some spots in the plot but land preparation was completed by the 4-wheel tractor and rotavator. During land preparation for the sixth crop, tillage could not be completed with the 4-wheel tractor due to repeated bogging. The tillage operation was finished by a lightweight 5 hp tiller resulting in a marked change in the movement of the compacted layers (note "after tillage" readings between crops five and six in the 4-wheel tractor plot). Land preparation for crop seven in the 4-wheel tractor plot was done by a 5-7 hp IRRI tiller using the same tillage procedure as that used in the 5-7 hp IRRI tiller plot. Again a sharp reduction in the depth of the compacted layers was observed.

It can also be noted that the change in compacted layer depths recorded before and after tillage are becoming less with each succeeding cropping season, to the point where there was little change observed during land preparation for the seventh crop.

Except for the 4-wheel tractor plot, little change in the compacted layer depths occurred between crops six and seven. This may have been due to an unseasonal lack of rain during the period from harvest of the sixth crop to land preparation for the seventh crop, thus allowing the land to dry out somewhat. Grain yield from all plots was measured for the first five crops with no differences that could be attributed to the tillage system used.

The study will continue for one or two more cropping seasons to determine if the compaction layer depths continue to stabilize.

Liquid Injector Evaluations

The development of the chemical liquid injector for root zone application in lowland rice has been discussed in previous reports. After a series of tests and modifications, final prototype units were made for testing and evaluation in farmers' fields and research stations throughout Asia.

The evaluations are being conducted to determine performance and structural deficiencies in the design and to obtain suggestions and recommendations from the users for further improvement of the machine.

Test units were ordered from local manufacturers, numbered, and calibrated. Instructions were written to insure proper use. The numbered units with calibration tables, instructions, and data report sheets were distributed to farmers, farmer organizations, research stations, extension workers, and others for evaluation. Thus far, 58 units have been distributed in the Philippines and 33 units in 15 other countries. In addition to the evaluation of the mechanical durability of the machine, the Agronomy and Entomology Departments of the Institute are continuing their studies on application rates and the effectiveness of the machine in applying chemicals in paddy fields. They are also supplying us information on performance and durability.

An informational leaflet on the liquid injector has been prepared and is being distributed on a request basis.

Preliminary results from the tests conducted at IRRI by the Engineering, Entomology, and Agronomy Departments and observations made in farmers' fields indicate the need for increased structural integrity and improved piping design and fabrication to eliminate fluid leaks. Some field problems encountered were: operator's complaints of backache after use, poorly tilled fields severely reduced the applicator's effectiveness, difficult to use in paddy soil that has settled and hardened, unavailability of clean water in the field for mixing chemicals, and the time required to apply the chemicals. Application times average approximately 40 hours per hectare.

While limited information has been obtained from tests in other countries the injector has been modified based on the above observations. The skid was lengthened from 23 cm to 30 cm, the structure strengthened, and the furrow opener was tapered from front to back. Preliminary observations on the modified injector showed an improved performance. Tests are continuing.

Manufacturers will have to emphasize quality control to eliminate leaks and insure that constant sized orifices are used for uniform discharge. Variation in discharge flow of the liquid injectors reached a maximum of 16 percent from the average. The Entomology Department recommends a maximum of 10 percent variation in flow rate.

Diaphragm Pump Tests

Prototype pumps from two manufacturers have been tested for over 100 hours and were found generally acceptable. The tests revealed that manufacturers must insure that all specifications are

closely adhered to and particular attention must be paid to the fabrication and installation of the upper and lower valves to insure a tight fit between the valves and pump body. Otherwise the valves leak, which reduces the efficiency of the pump.

Failures of the foot pedal pivot pins occurred on both pumps after 31 and 70 hours, respectively. The present cantilevered design creates a high stress in the weld joint where the pin is anchored to the leg of the pump body. A strattle-mounted pin should eliminate this problem.

The rubber diaphragms, if of the specified thickness and material, have been tested for up to 135 hours of pumping with no signs of impending failure. Our tests indicate that thicker material has a shorter life. Tests to determine the maximum expected life are being conducted.

Moisture Meter Test

A manufacturer's prototype of the IRRI designed moisture meter was evaluated for construction and operating characteristics.

The modifications made by the manufacturer was use of wood for the housing and cover, thicker dump and test cells, heavier hook-up wires, and the addition of a fuse and step down transformer.

The response characteristics of the moisture meter were equivalent to that of the IRRI prototype model. The actual performance of the moisture meter on grains of different moisture contents was the same as the original IRRI prototype model within the range it was tested. The performance of the IRRI designed moisture meter is comparable to that obtained from the more expensive capacitance type commercial meters and tends to be more accurate than the portable resistance type moisture meters.

The manufacturer was advised to: continue use of wooden housing because it prevents electrical shocks; use a much smaller step-down transformer because the current requirements of the meter at full scale deflection is only about 200 microamperes; use smaller hook-up wires to reduce cost; and calibrate the meter dial for direct reading of moisture content percentage.

Test of axial flow thresher with oscillating conveyor

Extensive tests were conducted on tha axial flow thresher with oscillating conveyor to compare its performance and durability with that of production models of the axial flow thresher.

The adjustable straw louvers reported in Report No. 21 were set

at 77.5°, 70°, and 62.5° with respect to the axis of the threshing cylinder and threshing capacity tests were run at each setting. Capacity was approximately 20 percent greater when the louvers were positioned at 62.5° compared to capacity at a louver setting of 77.5° with comparable overall losses.

A prototype with louvers fixed at 62.5° was built and a series of threshing tests were conducted in IRRI plots and farmers' fields. Average capacities ranged from 0.5 to 1.0 t/hr over a range of moisture contents and easy-to-difficult threshing varieties. Paddy with wet straw, that encountered when harvesting immediately after a rain, caused a marked reduction in capacity due to small pieces of wet straw clinging to the cleaning screen and thus closing the screen holes.

The tests showed that the grain was not flowing evenly over the oscillating screen, tending to pile up on one side, causing overall cleaning capacity reductions. Vertical baffles were added to the conveyor at the entrance to the screen to spread the grain. In addition, a cleaning screen tilting adjustment was installed to further spread the grain. These changes improved cleaning capacity and reduced losses. Wet paddy still reduces screen capacity and that problem is being studied.

A continuous threshing test over a period of seven days in 10 hectares of a difficult threshing variety of Korean paddy, Milyang 21, resulted in an average threshing capacity of 0.6 t/hr for the axial flow thresher with oscillating conveyor compared to 0.4 t/hr for a commercial thresher based on the original axial flow design. The lighter weight of the new design was an added advantage when moving the threshers in the soft fields.

The thresher was also operated at no load for 170 hours without structural failure or observable wear on moving parts. Performance and durability tests are continuing.

Limited sorghum and soybean threshing tests have been conducted. Threshing capacities of up to 0.9 t/hr of sorghum have been observed. Even though cleaning losses were very high, farmers' comments were favorable. Development work to improve the machine performance in sorghum and soybeans continues.

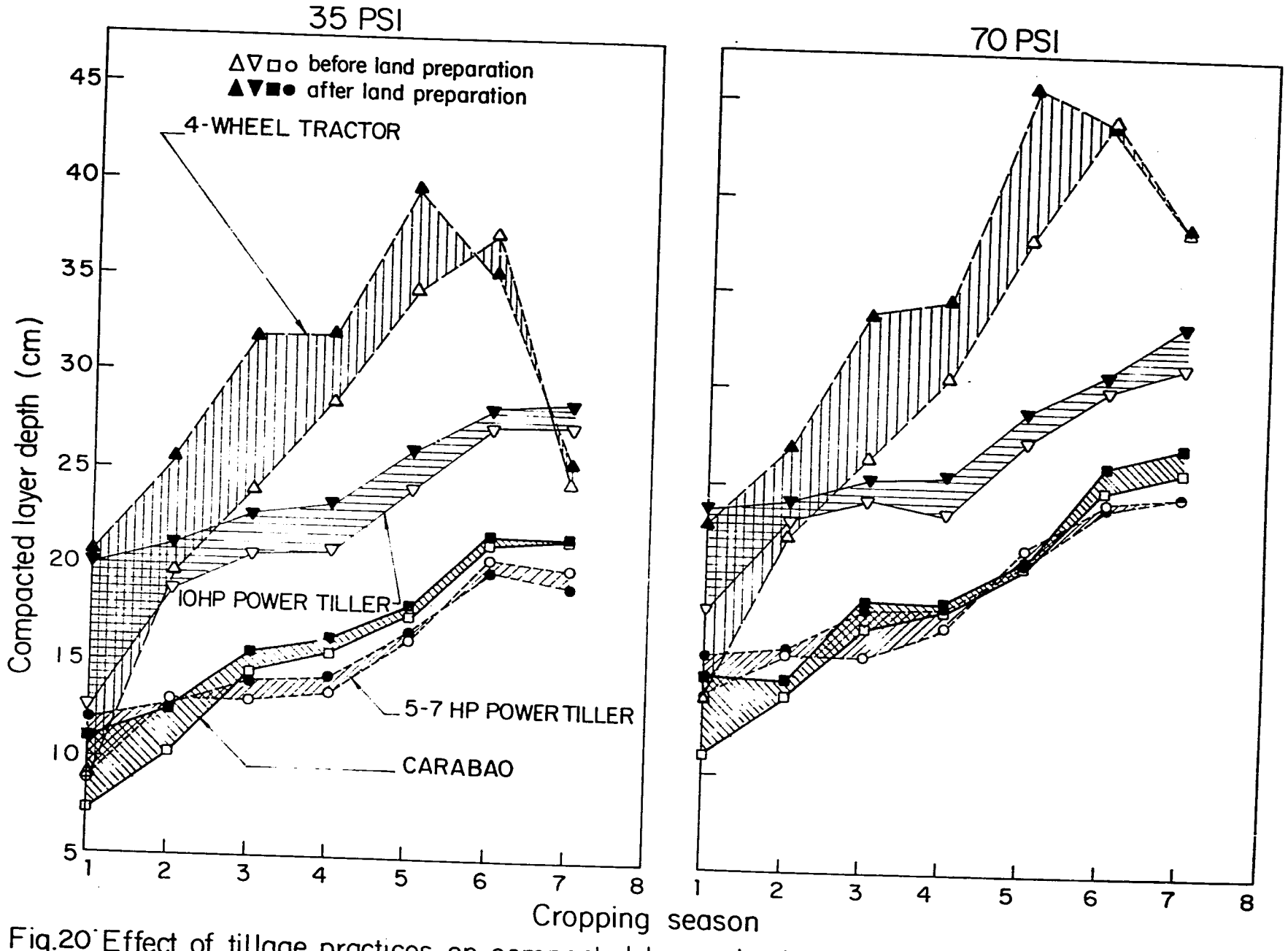

Fig.20 Effect of tillage practices on compacted layer depth.

MECHANIZATION SYSTEMS

Production and Marketing of Power Tillers in the Philippines

This study covered both suppliers and users of power tillers. Data from individual tiller manufacturers and/or distributors and past tiller studies conducted by IRRI and other government agencies were consolidated to form the data base for the study.

The objectives of the study were: to determine the manufacturing requirements and examine the production capabilities of the local power tiller industry; to develop a marketing profile by examining sales patterns, regional distribution, and local pric'ng; and to examine the major problems in the production, marketing, and utilization of the tillers.

Available information indicates 45 tiller firms are operating in the Philippines. Of these, 32 are manufacturers and the rest are either assemblers or distributors. Seventeen firms began production and/or assembly of tillers in 1975. Five firms manufacture IRRI-designed machines. Only one of the 32 manufacturing firms is considered large, with capital above US$0.5 million. The remainder are either small or medium-sized. Small firms limit their product line to one or two agricultural items while medium and large firms engage in agricultural, industrial, and construction equipment production. Five firms received an average of 39 percent of their sales dollar from power tillers, 46 percent from other agricultural machines, and 15 percent from industrial and construction equipment.

Thirty-two firms manufacture local brands and five assemble complete or incomplete imported knockdown units. In 1975, approximately 7,400 units were built by 15 firms, while 4,500 units were imported and assembled by four firms. Rated production capacity utilization was only 57 percent (Table 2). Reasons for the underutilization of production capacity are low demand in proportion to capacity, lack of operating capital, and scarcity and high cost of raw materials.

Kubota, Mitsubishi, Honda, and Fieldmaster have been the market leaders from 1972 to 1975. The sales of these brands accounted for 60 percent of total sales for the four-year period. Lakas Elepante, which was introduced in 1974, emerged as the third biggest seller in 1975. Magico, a local brand from the Bicol region, has also contributed significantly to sales. Five current brands are of the original IRRI-design, but only four companies reported sales, which accounted for 17 percent of total sales in 1975, up from 13 percent in 1974.

Eighty-four percent of 1975 sales occurred in Luzon, eight percent in the Visayas and eight percent in Mindanao.

Imported tillers accounted for 65 and 55 percent of total sales in 1974 and 1975, respectively. Special subsidies on 3,000 Kubota units in 1974 and 2,000 units in 1975 encouraged high sales of imported units. If this special government program is not included, 63 and 56 percent of sales in 1974 and 1975, respectively, were local tillers. Sixty-two percent of total sales in 1975 were gasoline tillers and 38 percent diesel. If Kubota special sales were not included, 76 percent were gasoline-powered and 24 percent were diesel (Table 3). Seventy-five percent of sales in 1974 and 45 percent in 1975 were in the 7 to 9 horsepower range. In 1974, only 18 percent of total sales were in the 10 horsepower and above class, but this category increased to 41 percent in 1975 (Table 4).

Farmers preferred tillers for farming areas of up to 15 hectares per year. Sales were greatest on farms where the area of the main crop was from 5 to 9 hectares. Tillers were heavily employed in rice production.

Approximately 11,000 tillers and 2,200 tractors were sold in 1975. Using a simple trend projection, 1976 sales may reach 17,400 tillers and 2,300 tractors (Table 5).

Prices of local tillers, with implements, range from US$940-1240 depending on brand and size. Average prices of local tillers equipped with gasoline engines are US$1000, 1060, and 1120 for 7 hp, 8 hp, and 10 hp units, respectively. The prices of imported tillers range from US$1560 to 5100. Imported tiller prices average US$1860 for 7 hp gasoline models, 2600 for 7 hp diesel units, 2900 for 8.5 to 9 hp diesel and 4600 for 10 to 12 hp diesel models.

The major problems cited by industry sources include: a shortage of working and investment capital, non-availability and high cost of raw materials, stiff competition from firms producing inferior quality products, lack of awareness among farmers on the value of farm machinery, and a general absence of government policies and technical support relating to farm equipment manufacturing activities.

Power Tiller Survey

A survey of about 30 power tiller owners in Laguna Province is underway to determine the following: nature and degree of utilization of power tillers for field work, transport, and contract work; effects of tiller ownership on cropping patterns, intensity, yield and income; problems related to service, performance and credit; and future demand characteristics in terms of desired performance and feature requirements for tillers.

Those interviewed were tiller owners randomly drawn from previous tiller surveys conducted by the Agricultural Engineering Department and

new owners of both locally-built IRRI-designed and imported tillers. Several water buffalo owners were also included to determine reasons for not acquiring a tiller.

In addition to farmer interviews, several dealers were interviewed about the marketing, repair, and servicing aspects of their products, factors which appear to affect the buying preference of farmers. Additional surveys will be conducted in Central Luzon and the Bicol region.

Alternate Field-Level Rice Post-Production Systems

Pilot trials were implemented in three villages of Nueva Ecija Province, Philippines to determine the farm-level efficiency of alternate techniques and systems of harvesting, handling, threshing, and drying. Specifically, the study aims were: to measure quantitative and qualitative losses at each stage of field operations when using various systems of post-production technology and management; to compare the benefits resulting from improvements in individual operations within each system; and to evaluate and compare the overall technical and economic performance of each system.

Five systems, consisting of alternative combinations of technology and management, were utilized in the pilot trials (fig. 21). System I was the traditional technology commonly used by farmers. Threshing was entirely manual with the operator using the threshing frame or "hampasan". Threshed paddy was then solar-dried prior to storage or milling. System I acted as the control, against which the other systems were compared.

Manual threshing was also used in System II, but a twin-bed batch dryer was used to dry the grain prior to storage. System III used the IRRI-designed axial flow thresher immediately following harvest and traditional solar drying.

In System IV, paddy was threshed with the axial flow thresher and dried in the twin-bed dryer. The same technology was used in System V but the paddy was harvested on three different dates (five days before maturity, at maturity, and five days after maturity) to determine the effect of harvest date.

Crop-cut samples were taken in each post-production system to measure potential yield at the field level. Further yield assessments were made following threshing (but before drying) and following drying to obtain actual yields. Paddy samples were also taken at each stage of the operational sequence to determine changes in quality which occurred as a result of using particular treatments. These samples were analyzed at the National Grains Authority laboratory to determine paddy quality and milled rice characteristics resulting from each combination of techniques. All yield and weight measurements were corrected for moisture content and impurities.

Labor employed for each operation within individual systems, the costs incurred to perform each operation, and the time required to complete an entire sequence of operations were recorded. In addition, the quantitative and qualitative measurements necessary to impute relative benefits and costs for each system were also analyzed.

Improved systems of post-production technology substantially reduced the labor required for threshing and drying. The introduction of the axial flow thresher in Systems III, IV, and V reduced threshing labor by about 99 m-h/ha or 34 m-h/t (Table 6). In a similar, though less significant way, the use of the batch dryer in Systems II, IV, and V reduced labor requirements by about one-half, both on a per hectare and a per ton basis.

Labor productivity expressed in kilograms per man-hour or US dollars per man-hour increased more than proportionally with the decrease in manpower requirments because of the increase in output resulting from the use of the improved system (Table 7). Increased yields and their effect on total labor requirements are also linked with timeliness of post-production operations. The results of the pilot trials indicate that delays at any point in the post-production operations increase losses, regardless of the techniques used.

Table 8 shows the percent grain loss resulting from different post-production operations. The introduction of the axial fow thresher saved an average of two to eleven percent in the amount of total paddy lost after threshing. Improved post-production technology (System IV) exhibited lower total grain loss at all three field sites, when compared to the traditional system (System I).

Table 9 illustrates the relationship between elapsed time from harvesting through drying and grain yield. In general, grain loss rose with increases in the time interval between harvesting and threshing. More significant, however, are the yield differences between the traditional system and those which used either one or both improved methods of threshing and drying. Using a dryer in System II increased grain yield by 12 percent over System I. Similar increases in yield were found in System III from the use of the mechanical thresher. System IV, which employed both the thresher and dryer increased output the most.

Differences in the quality of grain from each post-production system are shown in Table 10. Although overall recovery of milled rice increased only four to six percent when using the improved systems, the percentage of broken, fermented, discolored, and immature grains was significantly reduced, particularly when the batch dryer was used. An inverse relationship was also observed between elapsed time from harvesting to final drying and the percentage of head rice recovery (Tables 9 and 10). A total elapsed time of 4 days from harvesting to drying resulted in only 77 percent head rice recovery. Con-

versely, systems with a total elapsed time of two days gave 90 and 91 percent head rice recovery.

A series of cost estimates depicting the relative expenses in each system, based on observed labor, fuel, and fixed investment requirements, were computed for each of the three villages as well as an average for all three locations designated as Nueva Ecija (Table 11). Costs were expressed in terms of US dollars per ton to incorporate the loss differentials between alternative systems. No attempt was made to ascribe increased value to improvements in quality that resulted from the use of the mechanical system, although this would accentuate the differences.

Two different cost estimates were considered in analyzing traditional methods of harvesting and threshing. The first was based on a contractual harvesting and threshing fee paid in paddy, while the second was based on actual labor utilized, using an imputed wage rate of US$0.14/h. Using the contractual harvesting and threshing fee, a total cost of US$14/t was obtained for the improved system (Table 11). This was $11/t lower than the cost incurred using System I. The improved system, which incurred the lowest grain loss, had a higher net return of $99/t compared to $77/t for the traditional system (Table 12).

The cost estimate was based on the observed level of labor used in each of the post-production operations. An underestimation of labor utilized for the solar drying operations resulted in a lower drying cost for those systems employing solar drying. A cost comparison between traditional and improved post-production systems showed slightly lower total cost of US$13/t compared to $14/t in the mechanized system (Table 13). Expressed in terms of net benefits, however, the system using the mechanical thresher and dryer had the highest net return of US$99/t compared to only $89/t with the traditional system (Table 14).

The above findings indicate that improved mechanical technologies have both a quantitative and qualitative impact on output through more timely operations and reduced unit costs. A more detailed report is available upon request.

Potential of Mechanizing Upland Cropping Operations

As part of this study, that was conducted among 100 farmers in two villages of Batangas and Laguna Provinces, Philippines, a series of questions were asked relating to seeding practices. Responses indicated that many farmers felt seeding was a problem. Table 15 shows the percentage of farmers encountering problems and the nature of these problems. Major problems are high seed rates, poor stand establishment, and excessive time and labor requirements. Seeding problems are also affected by the kind and number of crops planted. For example, the Batangas farmer's main problem is the total time required, since he plants an average of 7 crops per year, compared to only 3 crops for the Laguna farmer. Table

16 shows that 50 percent of Batangas farmers and 22 percent of Laguna farmers showed interest in acquiring a seeder. Generally, the responses indicate that farmers want a machine which will, as a first priority, improve labor productivity. Table 17 presents information relating to investment limitations and the nature and flexibility of a seeding machine. The investment capacity of farmers in both villages is over US$1300. Farmers require a seeder that can plant one hectare per day and sow rice, corn, and garlic. There is a preference for a motorized seeder or one which can be drawn by a cow or water buffalo.

Table 2. Capacity and plant utilization for manufacturing firms producing power tillers, Philippines, 1974-75.

Firm	1974				1975			
	Rated capacity per month (units)	Actual capacity per month (units)	Percent utilization	Sales as percent of actual capacity[1/]	Rated capacity per month (units)	Actual capacity per month (units)	Percent utilization	Sales as percent of actual capacity[1/]
1	300	70	23	97	300	92	31	24
2					300	na	na	na
3	na	na	na	na	500	na	na	na
4	85	74	87	39	84	55	66	124
5	300	30	10	13	300	150	50	31
6	350	267	76	25 (118)*	350	292	83	39 (96)
7	na	na	na	na	500	na	na	na
8					83	71	86	32
9					350	210	60	57
10	50	12	24	86	50	12	24	58
11	120	10	8	20	120	50	42	14
Total	1,205	463	38[2/]	40[3/] (93)	2,937	932	57[2/]	54[3/] (71)

[1/] Sales per month over actual production capacity per month. One possible reason why sales percentage exceeds 100 is due to stock inventories. Power tillers that were produced but were not disposed in the past year were sold in the following year. Sales percentages in 1975 cover the period January to December.

[2/] Average for firms with production data.

[3/] Average for firms with sales data.

*Numbers in parentheses are percentages if Kubota sales of 3,000 units in 1974 and 2,000 units in 1975 to the Department of Agrarian Reform are included.

na - not available

Source: Individual reports of firms submitted to NFAC and AMDA, 1974-75.

Table 3. Sales of power tillers by source and fuel, Philippines, 1972-75.

Item	1972		1973		1974		1975	
	no.	%	no.	%	no.	%	no.	%
Source								
Local	336	24	2,073	66	2,338	35 (63)*	4,772	45 (56)
Imported	1,072	76	1,047	34	4,383	65 (37)	5,768	55 (44)
Total	1,408	100	3,120	100	6,721	100	10,540	100
Fuel								
Gasoline	514	36	2,571	82	3,219	48 (86)	6,493	62 (76)
Diesel	894	64	549	18	3,502	52 (14)	4,047	38 (24)
Total	1,408	100	3,120	100	6,721	100	10,540	100

*Numbers in parentheses are percentage distributions if Kubota sales of 3,000 units in 1974 and 2,000 units in 1975 to the Department of Agrarian Reform are not included.

Sources: Sales reports of firms submitted to AMDA and NFAC, 1976; IRRI interview of firms, 1974-75.

Table 4. Sales of power tillers by horsepower and fuel, 11 firms, Philippines, 1974-75.

Fuel	Horsepower	1974		Jan-July, 1975	
		no. units	%	no. units	%
Gasoline	6 and below	243	9	317	21
	7 to 9	2,113	76	805	52
	10 and above	412	15	422	27
	Sub-total	2,768	100	1,544	100
Diesel	6 and below	-	-	-	-
	7 to 9	330	66	165	26
	10 and above	170	34	465	74
	Sub-total	500	100	630	100
Combined Gasoline and Diesel					
	6 and below	243	7	317	14
	7 to 9	2,443	75	970	45
	10 and above	582	18	887	41
	TOTAL	3,268*	100	2,174*	100

*Does not include Kubota special sales of 3,000 units in 1974 and 2,000 units in 1975 to the Department of Agrarian Reform.

Source: Sales reports of firms submitted to AMDA and NFAC, 1975.

Table 5. Actual and projected sales for tractors and power tillers, Philippines, 1960-1990.

Year	Tractor	Power Tiller
1960		
1961	813	
1962	994	
1963	863	
1964	950	
1965	607	1,505*
1966	664	1,932
1967	1,531	3,058
1968	1,630	1,873
1969	1,358	910
1970	978	475
1971	1,086	1,000
1972	1,216	1,408
1973	1,517	3,120
1974	1,666	7,335
1975	2,176	11,030
1976	2,300	17,400
1980	4,000	68,000
1985	9,000	209,000
1990	17,000	470,000

*Estimated cumulative total of power tillers sold between 1960 and 1965.

Table 6. Labor requirements per hectare and per ton using alternate post-production systems, Nueva Ecija, 1975-76.

	Post-Production Systems[a]						
	I	II	III	IV	V_A	V_B	V_C
Labor requirement per hectare:	m-hr/ha (m-hr/t)[b]						
Harvesting[c]	139 (49)	144 (51)	136 (55)	142 (40)	136 (52)	128 (51)	139 (54)
Threshing	131 (46)	132 (47)	30 (12)	38 (10)	30 (12)	34 (14)	28 (11)
Drying	22 (7)	10 (3)	24 (7)	10 (3)	12 (4)	13 (5)	21 (7)
Total	292 (102)	286 (101)	190 (74)	190 (53)	178 (68)	175 (70)	188 (72)

[a] See text for description of alternative systems.

[b] Based on the final dried weight of paddy adjusted for purity and 14% MC.

[c] Harvesting includes cutting, bundling, hauling and stacking of paddy ready for threshing.

Table 7. Labor requirements and labor productivity using alternative post-production systems, Nueva Ecija, 1975-76.

Post-production system	Yield[a] (t/ha)	Total labor requirement (m-hr/ha)	Labor productivity (kg/m-hr)	US$/m-hr)[b]
I. Manual threshing and solar drying	3.3	291.7	10.0	1.4
II. Manual threshing and mechanical drying	3.3	286.9	10.0	1.4
III. Mechanical threshing and solar drying	3.6	189.7	18.8	2.7
IV. Mechanical threshing and drying	3.6	189.2	19.1	2.7
V_A Harvest 5 days before maturity	2.8	179.1	15.0	2.1
V_B Harvest at maturity	2.8	175.9	14.7	2.1
V_C Harvest 5 days after maturity	3.0	188.9	14.0	2.0

[a]Based on the final dry weight of paddy adjusted for purity and 14% moisture content.

[b]Paddy valued at US$0.14/kg.

Table 8. Percent grain loss in alternate post-production systems by site and operation, Nueva Ecija, 1975.

	Post-Production Systems						
	I	II	III	IV	V_A	V_B	V_C
Grain loss by operation				percent			
Harvesting to threshing	23	24	18	15	13	23	21
Threshing to drying	6	5	3	6	5	8	1
Total loss	29	29	21	21	18	31	22

Table 9. Relationships between elapsed time from harvesting to drying, grain loss and yield for alternate post-production systems, Nueva Ecija, 1975-76.

Item	Post-Production Systems			
	I	II	III	IV
Elapsed time by operation (days)				
Harvest to thresh	1	1	0	0
Thresh to dry	1	0	2	2
Harvest to dry	4	1	2	2
Percent grain loss (%)				
Harvest to thresh	11.0	11.8	1.7	2.5
Thresh to dry	15.3	1.2	11.4	8.2
Harvest to dry	24.6	12.9	12.9	10.5
Yield per hectare (kg/ha)				
Harvesting	3307	4088	4873	3929
Threshing	2944	3605	4788	3831
Drying	2492	3561	4244	3517

Table 10. Quality characteristics for milled rice from alternative post-production systems, 51 paddy samples, sixteen plots, Philippines, 1975.

System	Quality characteristics (%)			
	Head rice	Broken rice	Milling Recovery	
			Brown rice	Milled rice
I	77.4	20.2	63.0	59.3
II	84.5	14.1	67.4	63.4
III	90.6	8.8	70.5	65.6
IV	89.9	9.2	68.4	64.4

Table 11. Cost estimates for alternate post-production systems, Nueva Ecija, 1975-76.

Expense	Post-Production System			
	I	II	III	IV
			US$/t	
Harvesting expense				
Cash[a]			-	-
Non-cash[b]			6.14	6.14
Sub-total	23.81	23.81	6.14	6.14
Threshing expense				
Cash			1.86	1.86
Non-cash			1.43	1.43
Sub-total			3.29	3.29
Drying expense				
Cash	-	3.97	-	3.97
Non-cash	1.0	0.43	1.0	0.43
Sub-total	1.0	4.40	1.0	4.40
Total Post-Production expense				
Cash	-	3.97	1.86	5.83
Non-cash	24.81	24.24	8.57	8.00
Total	24.81	28.21	10.43	13.83

[a] Includes the cost of fuel and oil and the depreciation of the machine.

[b] Cost of labor usually paid in kind.

Table 12. Estimated costs and returns for alternate post-production systems, Nueva Ecija, 1975-76.

Item	Post Production System			
	I	II	III	IV
	US$/t			
Returns	101.43	101.43	112.86	112.86
Costs	24.81	28.21	10.43	13.83
Net return	76.62	73.22	102.43	99.03

Note:

Returns have been adjusted using the observed figures on percent grain loss to adjust yield for each system by area. The price of paddy used was US $0.14/kg.

Cost in the first two systems was based on the contractual payment for the harvesting and threshing operations.

Table 13. Cost estimates for alternate post-production systems, Nueva Ecija, 1975-76.

Expense	Post-Production System			
	I	II	III	IV
Harvesting expense		US$/t		
Cash[a]	-	-	-	-
Non-cash[b]	6.14	6.14	6.14	6.14
Sub-total	6.14	6.14	6.14	6.14
Threshing expense				
Cash	-	-	1.86	1.86
Non-cash	5.71	5.71	1.43	1.43
Sub-total	5.71	5.71	3.29	3.29
Drying expense				
Cash	-	3.97	-	3.97
Non-cash	1.00	0.43	1.00	0.43
Sub-total	1.00	4.40	1.00	4.40
Total post-production expense				
Cash	-	3.97	1.86	5.83
Non-cash	12.85	12.28	8.57	8.00
Total	12.85	16.25	10.43	13.83

[a] Includes the cost of fuel and oil and the depreciation of the machine.

[b] Cost of labor usually paid in kind.

Table 14. Estimated costs and returns for alternate post-production systems, Nueva Ecija, 1975-76.

Item	Post-Production System			
	I	II	III	IV
	US$/t			
Returns	101.43	101.43	112.86	112.86
Costs	12.85	16.25	10.43	13.83
Net return	88.58	85.18	102.43	99.03

Note:

Returns have been adjusted to reflect the quantity of paddy recovered after deducting grain loss incurred for each system at each project site.

Cost estimates for the first two post-production systems have been based on the amount of labor required to perform each operation with an imputed wage of US$0.14/m-hr which is the prevailing wage rate in the area.

Table 15. Problems encountered in planting by village, 100 upland farmers, Philippines, 1975.

Item	Bo. Cale Batangas	Bo. Perez Laguna	All
Number of farmer respondents	50	50	100
		Percent reporting	
Farmers reporting no problem	62	62	62
Farmers with problem 1/	38	38	38
Problems reported:			
Lack and/or poor quality of seeds	19	31	25
Time-consuming	33	13	22
Labor-intensive	14	17	16
Unfavorable weather	10	22	16
Tiresome	-	13	7
Manual planting creates non-uniformity of rows	5	4	5
Low soil fertility and poor land preparation	9	-	5
Lack of cash to pay hired laborers	5	-	2
Inadequate water supply	5	-	2

1/Some farmers gave more than one problem.

Table 16. Interest in a seeder by village, 100 upland farmers, Philippines, 1975.

Item	Bo. Cale Batangas	Bo. Perez Laguna	All
Number of farmer respondents	50	50	100
		Percent reporting	
Farmers interested 1/	52	22	37
Farmers not interested	46	78	62
No comment	2	-	1
Reasons in favor of using a seeder:			
Time-saving	55	17	44
Ease in planting	21	25	22
Decrease labor input	7	33	15
Uniformity in rows	-	8	2
Better yield	3	-	2
No reason given	14	17	15
Reasons for lack of interest in the use of a seeder:			
Contented with present practice	44	43	43
Planting is an easy operation	18	10	13
Not applicable to upland and crops planted	13	13	13
No problem	9	13	11
Small farm size	4	10	8
Lack of cash	4	2	3
Longer time if seeder is used	4	-	1
Manual planting is cheaper	-	2	1
No other work	4	-	2
No reason given	-	7	5

1/ Some farmers gave more than 1 reason.

Table 17. Upland seeder requirements, Philippines, 1975.

Item	Bo. Cale Batangas	Bo. Perez Laguna	Total
Initial Investment Potential (US$):			
Mean	2500	1500	2350
Range	27-670	14-270	14-670
Desired Field Capacity (hr/ha)	5.8	6.7	6
Crops for which required:[1/]		percent reporting	
Palay	31	38	32
Corn	31	38	32
Garlic	21	-	18
Mung Bean	3	-	2
Cowpea	3	-	2
Sweet Potato	-	12	2
Vegetables (general)	3	-	2
Depends on soil	3	-	2
Not specified	7	12	8
Description:			
Motorized	84	66	80
Tractor/tiller mounted	-	-	-
Animal drawn	4	17	7
Manually operated	8	17	10
Combination (motorized/manual)	4	-	3

1/ Some farmers gave more than 1 response.

PILOT PROJECT

FARM LEVEL POST PRODUCTION SYSTEMS

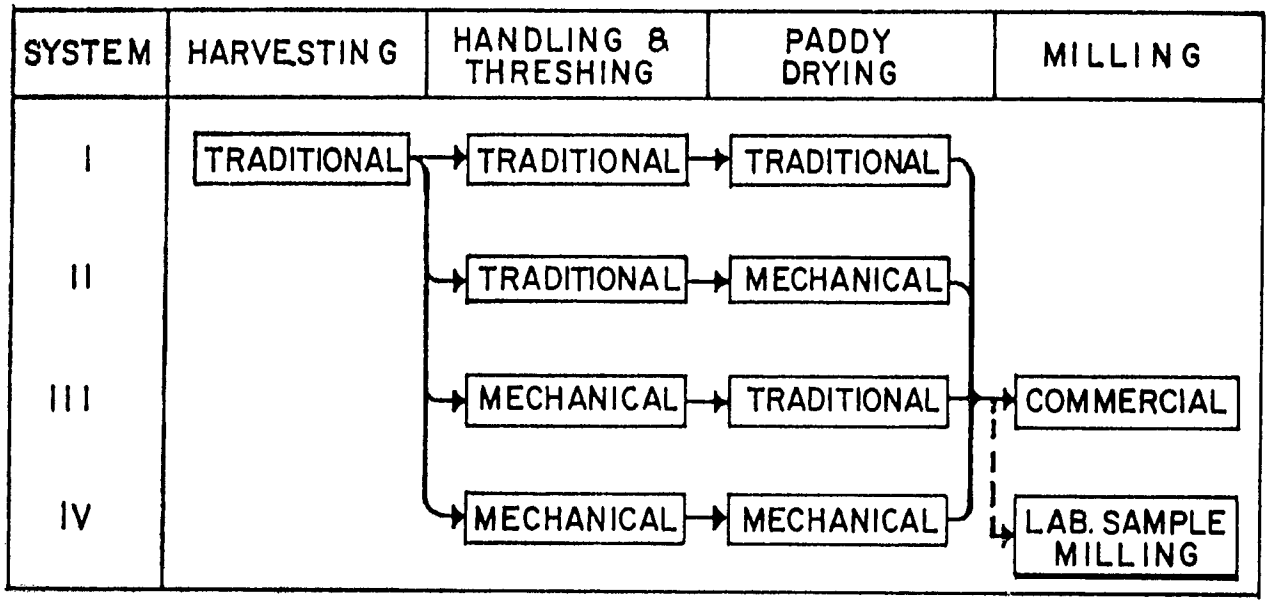

MEASUREMENTS (for each system)

o Crop cut samples o Paddy samples o Moisture content	o Post threshing output o Paddy samples o Moisture content	o Post drying output o Paddy samples o Moisture content	o Total rice o Head rice o By products

Fig. 21 Farm level post-production systems.

INDUSTRIAL EXTENSION

Introduction

The USAID funded Industrial Extension Projects working in conjunction with the IRRI funded Industrial Extension Subcontract Program produced measurable results during this reporting period. There was a significant increase in the number of IRRI-designed machines produced and number of manufacturers engaged in their manufacture (Table 18).

The projects in Thailand and Pakistan got underway in March and May, respectively. Although both of these projects were primarily involved in staff and office organizing activities, they were able to begin the extension of IRRI designs to manufacturers in their areas. The project staff in the Philippines divided its time between managing the subcontract programs, providing assistance to local manufacturers, and working with the Pakistan and Thailand industrial extension projects.

Interest in IRRI-designed machines continues to increase. Two hundred eighty-one new inquiries were received during the reporting period, which is 54 more than received during all of 1975. Also, the number of drawings sent to cooperators increased sharply, with 418 sets being sent during this reporting period compared to 216 during the last half of 1975.

Since IRRI's machinery development program was started in 1965, approximately 64,300 machines based on IRRI designs have been produced. Of this total, 24,931 or 39 percent were manufactured during this reporting period.

A large number of these machines were produced in Japan by manufacturers producing the power weeder. This product is not applicable to the current economic conditions in most developing countries and has not done well outside Japan. With several years of hindsight, it is obvious that this product was well suited to the farm machinery market in Japan. A comparison of yearly power weeder production figures show a comparable growth trend to that of the axial flow thresher and 5-7 hp power tiller which were introduced much later (fig. 22). The rate of the power weeder's increased production in Japan gives some insight into reasonable adoption rates for agricultural machines which truly meet the market needs in a developed country. Somewhat lower rates of adoption can be expected in LDCs with less sophisticated marketing channels.

Industrial Extension Subcontract Program

Efforts to support the activities of our subcontractors have increased since they are our primary link with manufacturers in most countries (Table 19). This additional support from IRRI has on several occasions removed bottlenecks which severely limited the effectiveness of the subcontract.

The subcontract program is managed by the industrial extension office in the Philippines; however, it is anticipated that some of the responsibility for monitoring subcontracts and establishing new subcontracts will be shifted to the Pakistan and Thailand offices.

Two subcontract programs were added during this reporting period. One is with the Malaysian Agricultural Research and Development Institute in Kuala Lumpur, Malaysia, and the other with the Suri Research Foundation, with headquarters in New Delhi, India. The subcontract activities in Thailand with the Engineering Division, Department of Agriculture, were merged with the Industrial Extension Project and is considered part of that program. Outlined below are brief reports on each subcontractor's activities during this reporting period.

INDIA - The country's large size, large number of inquiries, and the encouraging progress made by our subcontract with G. B. Pant University prompted establishment of a second subcontract in India. This new subcontract with M. M. Suri Research Foundation, a privately owned foundation, becomes effective on July 1, 1976.

Dr. K. N. Singh reported that two manufacturers have begun commercial production of the axial flow thresher. A third manufacturer is in the process of constructing and testing IRRI-designed machines. In addition to their successful extension efforts with the axial flow thresher they have continued their work on adapting the axial flow thresher to Indian conditions. This work is focused on modifying the machine for wheat threshing.

Both Indian subcontractors have contacts throughout the country, but to simplify the logistics of their support to cooperating manufacturers, G. B. Pant University will concentrate their efforts in the northern part of India and Suri Research Foundation will take responsibility for Southern India.

In addition to the two subcontracts in India, IRRI is receiving voluntary assistance from the National Research Development Corporation of India in identifying manufacturers who are interested in manufacturing IRRI machines. NRDC is very familiar with industry in India and Dr. Venkatesham identified several prospective manufacturers. These companies are referred to the subcontractors for followup assistance in evaluating and testing their prototypes.

INDONESIA - Significant progress has been made in promoting the manufacture of IRRI-designed machines in Indonesia. Ir. Dadang Tarmana reported that four manufacturers have begun producing IRRI-designed machines on a commercial basis during this reporting period. It is interesting to note that three of these four manufacturers have visited IRRI to attend workshops and training programs. IRRI's Agricultural Engineering Department has invested considerable effort in

these programs for manufacturers and the recent progress in Indonesia is evidence that this effort has been worthwhile. Several manufacturers have produced prototypes in the past, but this is the first time that Indonesian companies have manufactured IRRI machines on a commercial basis.

KOREA - Dr. Sung Kum Han reported that they have completed their comparative analysis of the IRRI-designed rice hull furnace and kerosene fired burner used with the batch dryer. The results of this test indicate that there is a significant economic advantage in using the rice hull furnace in Korea. They are also continuing their work on adapting the axial flow thresher for threshing barley, which is commonly grown in rotation with paddy.

MALAYSIA - The new subcontract with the Malaysian Agricultural Research and Development Institute (MARDI) became effective June 1, 1976 and the project officer is Dr. M. Hashim Noor, Assistant Director. The activities during this reporting period included development of a work plan for future activities and familiarization of MARDI staff members with IRRI-designed machines.

SRI LANKA - Mr. S. Kathirkamathamby reported that a modified version of the IRRI-designed axial flow thresher was successfully demonstrated before the Farm Mechanization Committee. Mr. A. Vamadevan, a participant in IRRI's 1975 training program, managed the thresher project. The Farm Mechanization Committee decided to have ten axial flow threshers built for further testing of the design on a pilot project basis. The Welisara Implements Factory will fabricate five units. Private manufacturers will also participate in the project by fabricating the remaining five units on a bid basis. The West German Government is funding the construction of the ten units.

Manufacturing Cost Reduction Project

A new project was started to help reduce the manufacturing cost of IRRI-designed machines. This project has two objectives: reducing costs through the optimization of component design, and effecting cost savings by helping manufacturers reduce waste and better utilize their resources.

Reducing the cost of IRRI designs through a design approach involves establishing the cost of individual machine components so high cost areas can be identified and redesigned to reduce costs. Due to a significant variability in conditions among manufacturers that affect the accuracy of the estimates, a representative or typical operating condition was arbitrarily selected. In some cases, an average working arrangement among manufacturers was used. Total material requirements, machine component specifications, and the general features of a finished product were based on IRRI drawings and plans.

Mr. Nemelito Langam, Senior Research Assistant, joined the industrial extension staff on March 1, 1976 and performed cost estimates on the 5-7 hp power tiller, axial flow thresher with rotary screen, and the axial flow thresher with oscillating tray (Table 20).

Three cooperating companies were visited during this reporting period and given technical assistance on production management. Production procedures were studied over a period of several days and potential areas of cost savings were pinpointed. Solutions were offered to problems identified during the studies. Actual manufacturing data, if available, was analyzed and manufacturers were advised of areas where costs are excessively high.

The previously mentioned cost estimates were compared with the actual manufacturing cost of these three companies (fig. 23). Actual material costs were close to estimated costs, but direct labor and manufacturing overhead costs were significantly higher than estimated. Low labor efficiency and dilution of indirect man-hours with direct man-hours attributed to high labor cost. Manufacturing overhead cost is a direct function of direct labor hours and increases in proportion with higher direct man-hour usage.

Industrial Extension Project in Thailand

Stewart Barton joined the project in early March 1976 as the industrial extension engineer in charge of the Thai-IRRI Machinery Program. During the remaining four months of this reporting period, his time was divided between hiring staff, purchasing office equipment and supplies, language training, establishment of office procedures, and activities which are readily recognizable as being related to industrial extension.

The Thai Department of Agriculture has provided temporary office accommodations for the project. The Department of Agriculture is constructing more permanent office space within the Division of Engineering facilities on the Kasetsart University campus which should be ready for occupancy in early August. Additional project personnel will be hired after the project is relocated in its more spacious permanent accommodations. Additional office furniture and equipment will be purchased at that time.

Initially, project activities have been focused on establishing contacts with public and private organizations connected with farm machinery manufacturing within the country and disseminating information on IRRI machines. Contacts have been established with nine international organizations which include most of those operating in Thailand.

Promotional activities involved extensive travel to various

organizations within Thailand as well as the presentation of seminars at many of these agencies.

Two of the private manufacturing firms cooperating with the IRRI program achieved substantial progress during this period, having manufactured 300 and 70 IRRI designed power tillers, respectively. There is considerable new interest in the IRRI-designed axial flow thresher and five manufacturers produced a total of 38 units. Other firms have plans to manufacture the power tiller, diaphragm pump, and batch dryer in the immediate future.

The project has acquired a power tiller, two dryers, and three threshers from local manufacturers. Work on the fabrication of two rice hull furnaces, two diaphragm pumps, and an axial flow thresher has been undertaken by the workshop at the Department of Agricultural Engineering. One thresher and one diaphragm pump will be shipped to Nepal in cooperation with FAO for test and evaluation.

Dr. Ken Stephens, a marketing and management consultant from the Georgia Institute of Technology, was associated with the Thai/IRRI project from February through May, 1976. He collected information about the farm machinery market in Thailand and helped establish contact with in-country and regional organizations that will interface with the Thai/IRRI project. He also provided assistance in setting up the office and publicizing the establishment of the Thai/IRRI project in Bangkok.

Industrial Extension Project in Pakistan

The IRRI-PAK Agricultural Machinery Program is under the leadership of Dr. Amir U. Khan, former Head of Agricultural Engineering at IRRI. The staff moved into their office building, provided by the Agricultural Research Council of Pakistan, on May 1, 1976. The office is located at 73-A Satellite Town, Rawalpindi. Modifications necessary to adopt the residential building for efficient use as an engineering office and experimental shop are in process.

Office furniture was acquired locally, drafting and other engineering equipment was ordered from abroad and is expected to arrive by September, 1976. Machine shop equipment and some IRRI prototype machines shipped to Pakistan from the Philippines are also expected to arrive in September, so the project should be well underway by early October.

The Agricultural Research Council has established an engineering cell which will collaborate with the IRRI machinery program. The ARC staff is now being hired.

Orders have been placed with interested manufacturers for prototypes of the root-zone liquid applicator, diaphragm pump, and axial flow

thresher.

Mr. Norman Illesley, an agricultural engineer from Colorado State University is spending one year at the Agricultural Engineering Department, University of Peshawar, under the Colorado State University/Pakistan project. As one of his research projects, he plans to adapt the IRRI axial flow thresher for wheat threshing. The IRRI program will provide technical assistance to Mr. Illesley.

Mr. Philip Hess, a consultant from the Georgia Institute of Technology, worked with the extension project from February through July, 1976. He helped establish the program and conducted agricultural machinery marketing studies. With the assistance of Mr. Hess, the project staff has established contact with several manufacturers and governmental corporations and agencies. A machinery newsletter is being published with wide distribution among interested individuals and companies in Pakistan.

The current personnel list for the USAID Industrial Extension Project is shown on Table 21.

Table 18. Number of IRRI-designed machines commercially produced (first six months of 1976).

Country/Region	Number of Manufacturers	MACHINES					
		5-7 hp tiller	Axial flow thresher	Batch dryer	Power weeder	Multihopper seeder	Total
India	3	-	33	-	-	2	35
Indonesia	4	13	13	2	-	-	133*
Japan	6	-	-	-	21,800	-	21,800
Philippines	19	2,130	208	44	-	26	2,408
Sri Lanka	2	45	2	-	-	-	47
Taiwan	1	-	-	100	-	-	100
Thailand	7	370	38	-	-	-	408
Total	42	2,558	294	146	21,800	28	24,931

*Includes 105 IRRI deep-placement granular applicators.

Table 19. Industrial Extension Subcontract Program Officers.

Dr. K. N. Singh
Head, Agricultural Engineering Department
G. B. Pant University of Agriculture & Technology
Pantnagar, Distt. Nainital
Uttar Pradesh, India

Dr. Sung Kum Han
Director
Institute of Agricultural Engineering & Utilization
Office of Rural Development
Suwon, Korea

Mr. M. M. Suri
President
Suri Research Foundation
B-14 Greater Kailash
New Delhi - 48
India

Dr. M. Hashim Noor
Assistant Director
Malaysian Agricultural Research and Development Institute
P. O. Box 208, Sungai Besi
Serdang, Selangor, Malaysia

Mr. R. Dadang Tarmana
Project Officer
Directorate of Food Crops Production
Department of Agriculture
Pasar Minggu, Jakarta
Indonesia

Mr. S. Kathirkamathamby
Superintending Engineer
Engineering Research & Development Division
Department of Agriculture
Peradeniya, Sri Lanka

Table 20. Manufacturing cost estimates on three IRRI machines.

Particular	MACHINE		
	Power Tiller	Axial Flow Thresher (Original Version)	Axial Flow Thresher with osc. tray (Modified Version)
1. Direct labor cost	US$27.62	US$76.97	US$66.27
2. Mfg. overhead cost[1/]	41.44	115.46	99.42
Total DL & OH[2/] cost	69.06	192.43	165.69
3. Material cost[3/]	324.47	586.77	496.57
4. Total mfg. cost	393.53	779.20	662.26
5. Direct labor hrs. used	102.21	284.79	245.22

1/ Composed of fixed and variable overhead expense items

2/ Direct labor and overhead cost

3/ Includes fabricated and purchased parts, with 7 hp engine, costing US$143.03

Table 21. Industrial Extension Project Staff.

Name	Position
Philippines	
John A. McMennamy	Industrial Liaison Engineer
Simeon A. Gutierrez	Senior Research Assistant
Nemelito Langam	Senior Research Assistant
Rodulfo Angco	Draftsman
Felicisima Q. Barrera	Secretary
Thailand	
P. Stewart Barton	Industrial Extension Engineer
Suwit Bunyawanichkul	Research Assistant
Chalit Choensombat	Technician
Boonsom Sooksamran	Driver
Juthaporn Charoenpravat	Secretary
Pakistan	
Amir U. Khan	Industrial Extension Engineer
Mohammad Ilyas	Research Aide
Inayat Ullah Goraya	Secretary

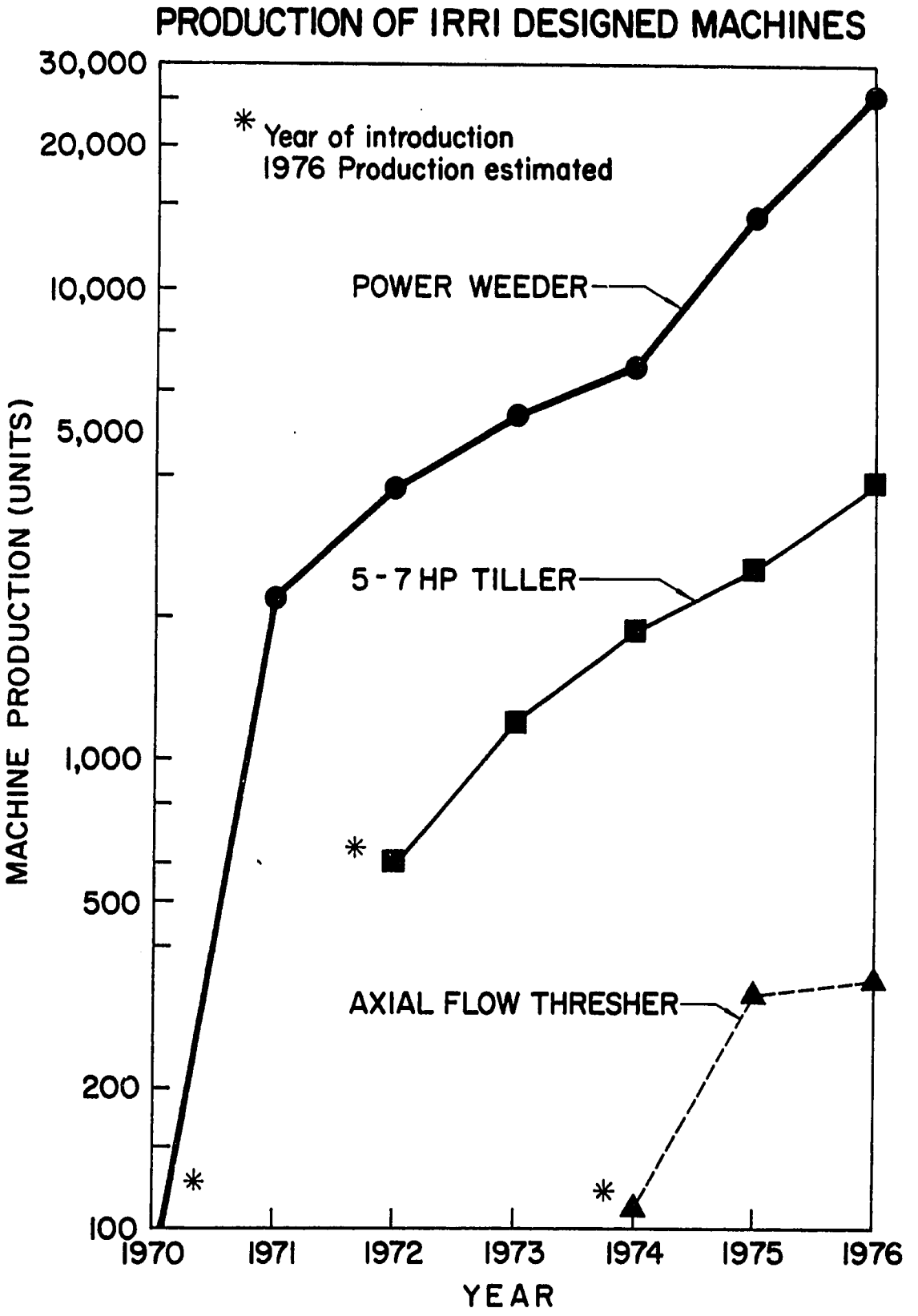

Fig. 22 Machinery sales growth trends.

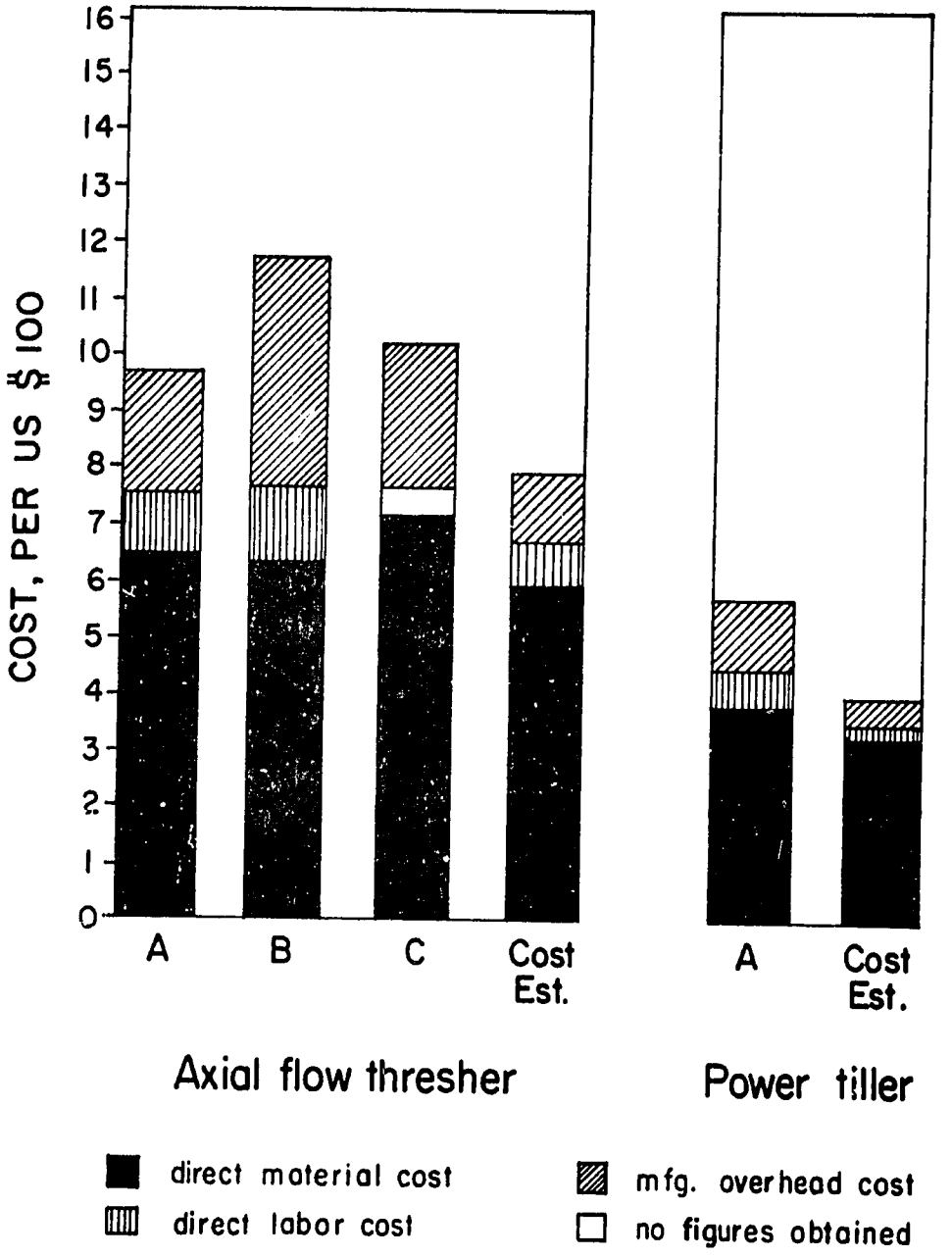

Fig. 23 Cost estimates vs. actual manufacturing costs.

PERSONNEL LIST*

Name	Position
B. Duff	Agricultural Economist & Department Head
D. Kuether	Associate Agricultural Engineer
S. Mahmud	Visiting Design Engineer
I. Manalili	Assistant Design Engineer
J. Policarpio	Assistant Design Engineer
J. Samuel	Post-doctoral Fellow
J. Arboleda	Sr. Research Assistant
N. Navasero	Sr. Research Assistant
Z. Toquero	Sr. Research Assistant
F. Cabrales	Research Assistant
R. Dayrit	Research Assistant
G. Espiritu	Research Assistant
L. Kiamco	Research Assistant
G. Salazar	Research Assistant
T. Taguiang	Research Assistant
L. Ebron	Research Aide
F. Juarez	Research Aide
C. Maranan	Research Aide
G. Villaruel	Research Aide
M. Diestro	Draftsman
F. Jalotjot	Draftsman
R. Pabustan	Draftsman
N. Rivera	Stockroom Custodian
A. Bagalso	Secretary
E. Co	Secretary
C. Jizmundo	Secretary
E. Dungo	Shop Foreman
Z. Borja	Machinist
A. Dizon	Machinist
C. Flojo	Tinsmith
R. Santos	Tinsmith
A. Barot	Welder
A. Camacho	Shop Mechanic
R. Dignadice	Shop Mechanic
M. Macatangay	Shop Mechanic
P. de Mesa	Shop Mechanic
M. Castro	Mechanic Helper
M. Fabellar	Mechanic Helper
E. Macatangay	Mechanic Helper
M. Salac	Mechanic Helper
F. de Leon	Field Assistant
J. Reyno	Field Assistant
R. Tobias	Field Assistant
L. Villegas	Field Assistant
R. Capule	Laborer
N. Silab	Laborer

*Please see Table 21 for Industrial Extension staff.