AGENCY FOR INTERNATIONAL DEVELOPMENT
WASHINGTON, D. C. 20523

BIBLIOGRAPHIC INPUT SHEET

FOR AID USE ONLY
Batch 49

1. SUBJECT CLASSIFICATION

A. PRIMARY: Food production and nutrition — AQ10-0336-0000

B. SECONDARY: Food processing--Oil crops--Soybean

2. TITLE AND SUBTITLE

Soybean processing using low level technology

3. AUTHOR(S)

(100) Nelson,A.I.; Ferrier,L.K. (101) Ill. Univ. Dept.of Food Science

4. DOCUMENT DATE	5. NUMBER OF PAGES	6. ARC NUMBER
1976	35p.	ARC

7. REFERENCE ORGANIZATION NAME AND ADDRESS

Ill.

8. SUPPLEMENTARY NOTES *(Sponsoring Organization, Publishers, Availability)*

(Final rpt.)

9. ABSTRACT

A procedure was developed for converting soybeans into a beverage. The study included evaluating a low-cost Decker hammermill for grinding dry soybeans and soy-cereal combinations, evaluating three different filtering devices, and constructing and evaluating a simple device for separating cracked soybeans into hull and cotyledon components. Whole soybeans were dropped into boiling water and boiled for ten minutes. The slurry was simmered for an additional 20 minutes. Then water was added and the slurry filtered. The filtrate or milk was flavored by addition of sugar, salt, and diacetyl or vanilla. Three systems were developed for filtering soy slurries. These included a simple filter sock or bag, a cradle filter, and a basket centrifuge. The centrifuge produced the highest yield of milk. However, the sediment content of the milk filtered with the sock method was much lower than that from the centrifuge or cradle. Evaluation of the device constructed to separate hulls and cotyledons from dehulled whole dry soybeans showed that it could separate virtually 100 percent of the hulls and approximately 64 percent of the hypocotyls from the cotyledons. It is a simple, low-cost system that can be readily constructed in developing countries. The beverage produced from whole soybeans was found superior in flavor and lessened mouth-drying characteristics than a beverage made from powdered soybeans.

10. CONTROL NUMBER	11. PRICE OF DOCUMENT
PN-AAC-999	
12. DESCRIPTORS	**13. PROJECT NUMBER**
Intermediate technology Product development Soybean	**14. CONTRACT NUMBER** AID/ta-C-1294 Res.
	15. TYPE OF DOCUMENT

AID 590-1 (4-74)

AID/ta-C-1294 Res.
PN-AAC-999
(Ill.)

SOYBEAN PROCESSING USING LOW LEVEL TECHNOLOGY

Soybean Food Processing Terminal Report
Contract AID/TA/C-1294
1 April 1976 to 31 October 1976

by
Alvin I. Nelson and Les K. Ferrier
Department of Food Science
The University of Illinois at Urbana-Champaign
Urbana, Illinois

SOYBEAN UTILIZATION

Accomplishments

Research was conducted in the following areas:

1. The development of a procedure for preparation of a palatable and generally acceptable soy beverage for home and village industry was completed. This work was carried out by an INTSOY supported graduate student working under staff direction. The thesis is being written and will be available after it has been approved and accepted by the Graduate College.

2. The filtering devices which are required for preparation of the soy beverage at the village level were evaluated.

3. The low cost ($704.00) Decker hammermill for grinding of dry soy, cereals and soy:cereal combinations was evaluated for performance.

4. A simple device was designed, constructed, perfected and evaluated for separation of cracked soybeans into hull and cotyledon components.

Summary

A summary of the principle findings follows:

1. Development of a Procedure for Preparation of a Palatable Soy Beverage for Home and Village Use.

The study on developing of the concept for preparation of a palatable soy beverage for home and village industry was completed. Work during this contract period covered final development of the preparation concepts as well as a comprehensive organoleptic evaluation of soy beverages prepared from whole raw dry soybeans, cracked or broken raw dry soybeans.

This concept involved very low level technology and a brief description of the process follows: whole soybeans were dropped directly into boiling water and the beans were boiled for ten minutes. After boiling, the weight of beans and water was adjusted to the starting level and the bean-water mixture was ground in a Waring blender. The ground slurry was simmered for an additional 20 minutes after which sufficient water was added to replace that lost by boiling and the slurry was filtered. The filtrate or milk was flavored by the addition of sugar, salt and diacetyl or vanilla.

Cracked or broken raw dry beans and powdered raw dry soybeans were also used to prepare the soymilk. A comprehensive organoleptic evaluation of the soy milks prepared from the three types of soy raw materials showed no significant differences in organoleptic properties with these exceptions. Color scores were significantly (5% level) higher for the soy milk prepared from the powdered dry raw soybeans. Flavor and mouth drying characteristics of beverage prepared from powdered soybeans were significantly (5% level) inferior to beverages prepared

from whole or cracked beans. However, all scores were in the range of 7 on a hedonic scale of 9 which indicated very good acceptance for all products. The procedure is considered ready for further testing and improvement under conditions in developing countries.

2. Evaluation of Filtering Concepts for Village Level Preparation of Soy Beverage.

Three systems were developed for filtering soy slurries in preparation of soy milk. These included a simple filter sock or bag, a cradle filter and a basket centrifuge. During this reporting period these filtering devices were thoroughly tested using soybean slurries made from whole, cracked and powdered soybean. These tests showed that soy milks prepared from the three different raw soybean types were quite similar in regard to yield, percent protein, solids and sediment. Comparison of the soy milks prepared with the different filtering devices showed that the centrifuge produced the highest yield of milk, followed by the sock and cradle methods. However, the sediment content of the milk filtered with the sock method was invariably much lower than that from the centrifuge or cradle. When all factors were considered the sock filter was judged to be the most desirable method. This method employs the lowest level of technology and is by far the cheapest and easiest to manufacture.

3. Evaluation of Mill for Grinding Dry Soybeans and Various Cereal Products.

A Decker Grainmaster hammermill was purchased for $704.00. This price included three mill screens and was the lowest priced hammermill in about sixty quotations from suppliers. This mill was tested using dry soybeans, corn and soybean-corn mixtures. The mill performed acceptably and was found to be satisfactory for grinding dry raw soybeans for soy beverage preparation. This mill is recommended for installation as a cooperative utility for village use.

4. Development of a Device for Separation of Hulls from Cotyledons.

A device was designed, constructed and tested for the separation of hulls and cotyledons from dehulled whole dry soybeans. Thorough testing showed that this equipment would separate virtually 100% of the hulls and approximately 64% of the hypocotyls from the cotyledons. This unit offers a simple, low cost system that can be readily constructed in developing countries.

Discussion

1. Research Efforts During this Contract Time Span.

The Final Report on Contract AID/CM/ta-c-75-19, April 1, 1973 to March 31, 1976, included a section on soybean utilization studies conducted by the Department of Food Science. This report covered various research activities during this period including evaluation of soybean varieties to determine if certain varieties are inherently more tender and of generally better organoleptic quality after cooking. Considerable time was devoted to developing and evaluating various drum dried soy-cereal products which might be used as weaning or breakfast foods. Nutritional quality was also determined for many of these products. In addition, Food Science graduate students, under the supervision of Food Science staff, worked on the development of (a) concepts for rapid preparation of weaning or breakfast foods and soybean:cereal patties that could be fried and used as meat substitutes in the diet, and (b) a procedure for preparation of a highly palatable soy beverage for home or village industry use.

This report covers the period of time, April 1, 1976 to October 31, 1976, during which the utilization studies were being phased out of the INTSOY program. This called for emphasis on only the most urgently needed aspects of soybean utilization research. The development of a soy beverage for village use required considerably more development effort than the other projects, and essentially all research effort was on the soy beverage project. Specifically this included further development of the beverage concept, detailed testing of the equipment developed for filtering the soy beverage, evaluation of effectiveness of the low-cost Decker mill for grinding dry soy and cereals and the development of a device for separation of hulls and hypocotyls from cotyledons after the dry soybeans had passed through a dehuller.

2. Development of the Concept for Preparation of Soy Beverage for Home and Village Use.

This work was done by an INTSOY supported foreign graduate student working on a Master of Science degree, and the thesis is presently being written. This concept employs a very low level of technology and only requires a grinder that is capable of fine particle size reduction, cooking pots and pans and a filtering device. A brief description of the procedure for preparing the soy beverage follows:

Dry raw whole beans, dry raw broken or crushed beans or dry raw soybean powder is dropped directly into boiling water and given a short cooking period to inactivate the off-flavor producing enzyme lipoxygenase. The cooked material, including the blanch water is ground in a Waring blender or other suitable grinder and the resulting slurry of soy solids is simmered for about 20 minutes to eliminate trypsin inhibitor and other anti-growth factors. After cooking, the slurry is filtered and the particulate solids or residue are removed. The filtrate has a viscosity which is similar to cow's milk. About 3% sugar, 0.1% salt and a trace of diacetyl or vanilla are added to the filtrate for flavoring. The residue remaining after filtering contains about 25% of the original weight of the slurry and slightly less than half of the total protein. Thus the residue is a highly valuable protein source and could be utilized for preparation of weaning, breakfast foods or soy-cereal patties for meat substitutes.

The filtering device that appears to be most desirable is a long tube or sock which is made from polyester cloth. This and other filtering devices were carefully evaluated for effectiveness and the results of this study are presented in a later section of this report.

The results indicate that 3% protein beverage can be prepared from dry raw soybean powder. About a 2.5% protein beverage can be produced from dry raw whole soybeans. Generally the lowest protein content is obtained from dry, raw, broken or crushed beans. However, the protein content of the soy beverage varies with preparation technique and further research is needed to clearly delineate the ideal preparation procedure.

Flavored soy beverages were prepared using the three raw materials described above. These beverages were evaluated using experienced panelists and the results were subjected to statistical analysis. Interestingly no significant differences were found in beverages made from whole, broken or powdered soybeans as regards off-flavor, bitterness, and tactual properties such as chalkiness. The color of beverage prepared from powdered soybean was significantly (5% level) superior to the beverages prepared from either whole or broken soybeans. However, the flavor and mouthdrying characteristics of beverage prepared from powdered soybeans were significantly (5% level) inferior to beverages prepared from whole or cracked beans. It was also very interesting to note that the ratings for all organoleptic properties and with all three beverages were generally about 7 on a hedonic scale of 9, with 1 being completely unacceptable, 5 being just acceptable and 9 being very highly acceptable. This is a clear indication that this concept can be used to produce soy beverages of good to very good acceptability.

In summary, the results obtained from this research indicate that the concepts for preparing the soy beverage are sound. Copies of the thesis covering the development of this concept will be available when the thesis has been accepted by the Graduate College of the University of Illinois.

3. Preparation of Soy Slurry.

The following method of preparation of the soy slurry from whole soybean products and the description of each of the filtering devices are edited quotes from the Final Report, Contract AID/CM/ta-c-73-19, period April 1, 1973 to March 31, 1976. These statements are readily understandable and accurate in detail regarding slurry preparation and filtering devices. The term "slurry" is defined as follows: "The slurry represents a water mixture consisting of ground whole soybeans of varying particle size".

The soybean slurry was prepared as outlined in Figure 1. Two pounds of cleaned Bonus 1973 whole dry beans were added to 20 pounds of boiling tap water in a steam jacketed kettle. This material was simmered for 10 minutes, removed from the kettle and adjusted with tap water to a total of 22 pounds. The mixture of beans and blanch water was treated as follows: The drained beans were roughly divided into two batches and one batch was added to the large Waring blender with just enough drain water to cover the beans. This minimum amount of water facilitated the grinding of beans to a finer particle size. Each batch was

FIGURE 1. PREPARATION OF WHOLE SOYBEAN SLURRY

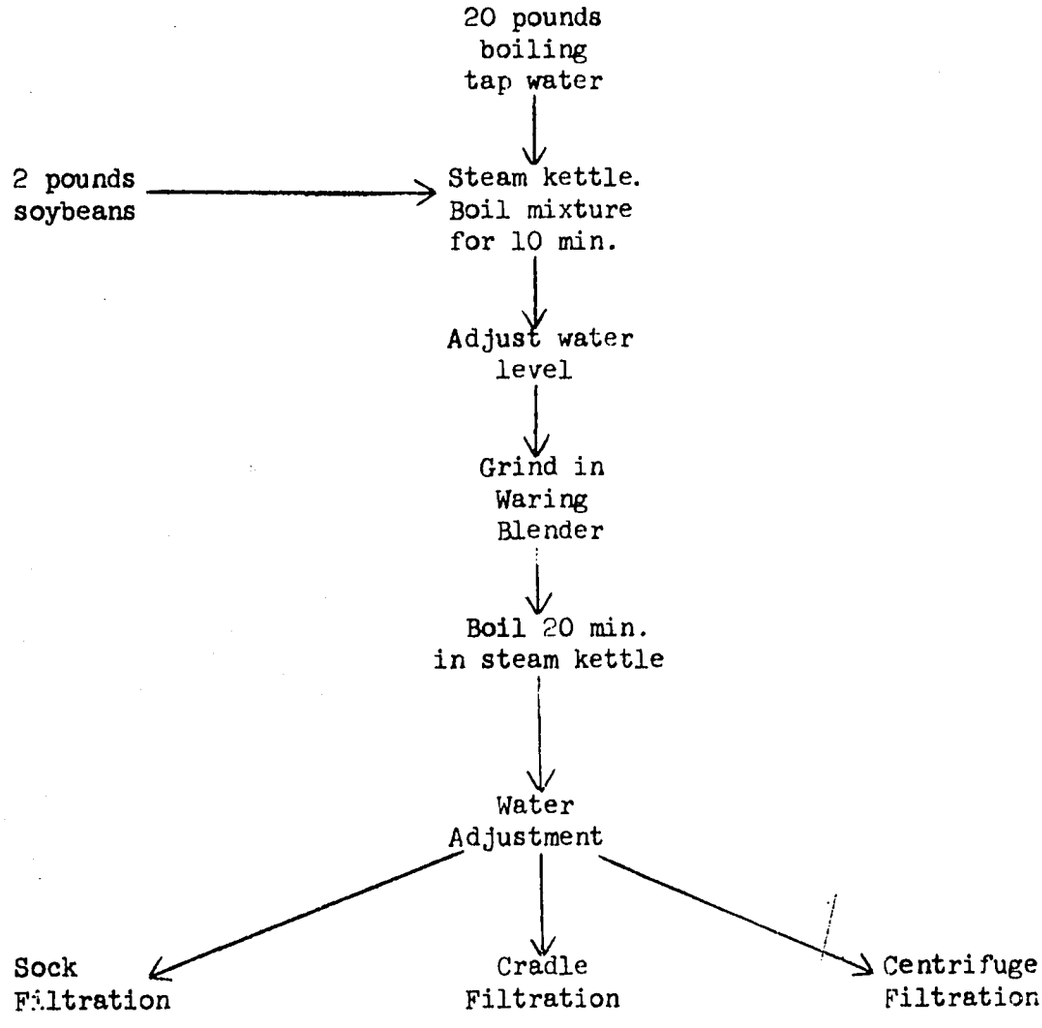

blended on medium speed for one minute, followed by one minute on high speed. When both batches were ground with small amounts of added water, they were combined and again ground for one minute on high speed. Following this, the mixture was simmered in a steam kettle for an additional 20 minutes with constant agitation. After simmering, water was added to the slurry to adjust the weight to 22 pounds.

Samples were thoroughly stirred to insure uniform distribution of ground constituents before sampling prior to filtration.

4. Filtering Concepts for Village Level Preparation of Soy Beverage.

This study was concerned with construction and initial testing of three devices for filtering soybean slurry to remove particulate, ground soy solids. It was evident that filtration of the soy slurry was the most difficult development step in preparation of the soy beverage for home or village use. Filtering must be accomplished with the lowest possible level of technology that would result in a filtrate of acceptable organoleptic tactual qualities. That is, chalkiness, mouth drying and viscosity characteristics of the soy beverage must be highly acceptable to the consumer.

Construction of Filtration Devices

It was recognized that a simple but an effective method would be required for filtering the soybean slurry. This method or methods would need to involve low level technology and the equipment should be easy to construct in developing countries at a reasonable cost. Thus three methods were considered; first, was a simple cloth filter system. The simplest form of this type filter would be square piece of cloth that could be manipulated so that a certain amount of pressure could be exerted on the slurry being filtered. This approach eventually evolved into a sock filter which was easily constructed and low in cost. The second method of filtration developed was called the cradle method. Here the slurry was filtered thru a cloth which was backed by a perforated stainless steel plate. A stationary paddle effectively stirred the slurry as the cradle was rocked and this tended to improve the rate of filtration. The third method was a basket centrifuge. The basket was lined with filter cloth and the slurry was forced thru the cloth by centrifugal action. All methods were based on simple technology and were relatively low in cost. However, the sock filtration method was by far the simplest and the lowest in cost.

Filtration of Slurry by Sock Method

The solid soybean particles were removed from the slurry using a cloth sock having dimensions of 6" diameter x 76" long. Two smooth pieces of 1/16" thick stainless steel, 3" x 24", are clamped using bolts and thumbscrews, to the bottom of the cloth sock, Figure 2.

The unfiltered slurry is poured into the sock and allowed to drain into a tub until the pores of the sock become clogged. When this takes place, the operator rolls up the sock using the stainless steel clamp. This squeezes

FIGURE 2. SOCK FILTER

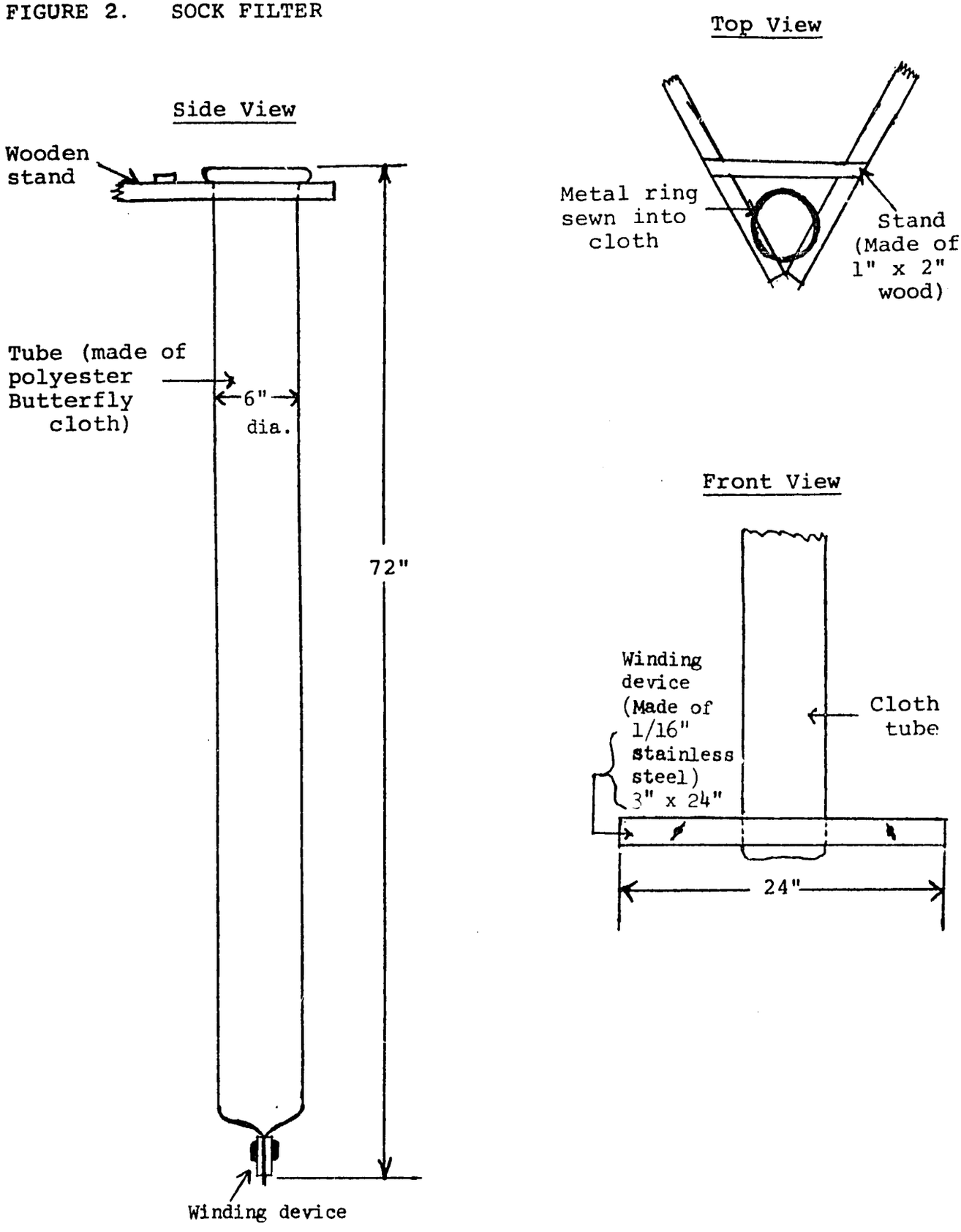

more fluid from the slurry. The sock is again unrolled and shaken slightly which unclogs the pores in the cloth. This procedure is repeated as many times as is necessary to squeeze the free liquid from the particulate soy solids.

The cloth found most satisfactory for this method of filtering consisted of 100% polyester and was sold under the trade name of "Butterfly". The physical characteristics of this cloth resembled heavy silk. This cloth contained 70 threads per inch, with each thread having a diameter of about .0025" and a spacing of about .012" between threads. A filter sock or bag made from this material can be easily cleaned by turning inside-out. Since this material does not absorb moisture, it is readily sanitized before and after each use.

Filtration of Slurry by Cradle Method

The illustration, Figure 3, shows the construction and indicates the general operation of this method. Essentially a half section of a metal cylinder, having a radius of 18", and a width of 16" is pivoted on a shaft to enable its operator to rock the cylinder back and forth on the pivot shaft. As shown in Figure 3, the bottom of the cylinder is fabricated from a perforated stainless steel plate which is covered with cloth similar to that used in the sock filter. As the cradle is rocked back and forth, a stationary paddle or squeegee moves the slurry across the filter cloth. The liquid product passes through the cloth and perforated steel plate into the receptacle below. This operation is continued until essentially all liquid is removed from the ground soybean solids.

Filtration by the Centrifuge Method

This method of filtration utilizes a centrifuge basket which is lined with cloth similar to that used in the sock filter. The basket revolves at 900 rpm and is constructed of a 15" diameter solid stainless steel base and the side is made of perforated (1/8") metal and is 6" high. In operation, the slurry is poured into the revolving basket and the liquid passes through the cloth and perforated side into a larger semi-covered chamber where it drains into a bucket. The cloth is removed for solids elimination and cleaning. Figure 4 shows two views of the basket type centrifuge.

5. Evaluation of Sock, Cradle and Centrifuge Filtration Methods.

Slurries Prepared from Whole Soybeans

These three filtering devices were tested using standard slurries, Table 1. The slurry, the filtrate (beverage fraction), and the residue (unwanted solids left after filtering the slurry) were analyzed for protein and solids. Protein was determined by multiplying Kjeldahl nitrogen by the factor 6.25. Solids were determined by the AOAC vacuum oven method. Percent sediment was determined in the slurry and the filtrate (beverage fraction) by allowing 100 ml samples to settle for 24 hours at 34°F in 100 ml graduated cylinders. After standing, the amount of sediment was readily evident by a demarcation line in the cylinder. Each filtering device was tested in duplicate and all data is presented in Tables 1 and 2.

FIGURE 3. CRADLE FILTER

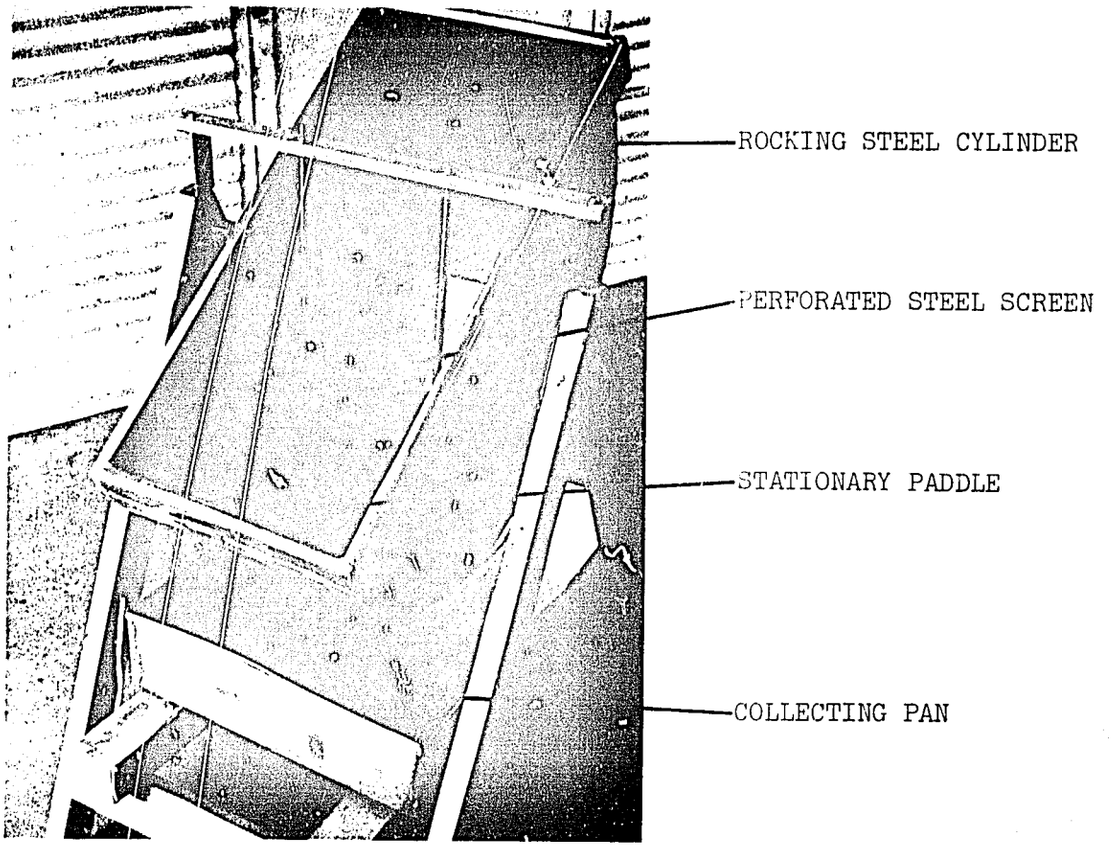

FIGURE 4. CENTRIFUGAL FILTER

TOP VIEW

ROTATING PERFORATED STEEL BASKET

COLLECTING DRUM

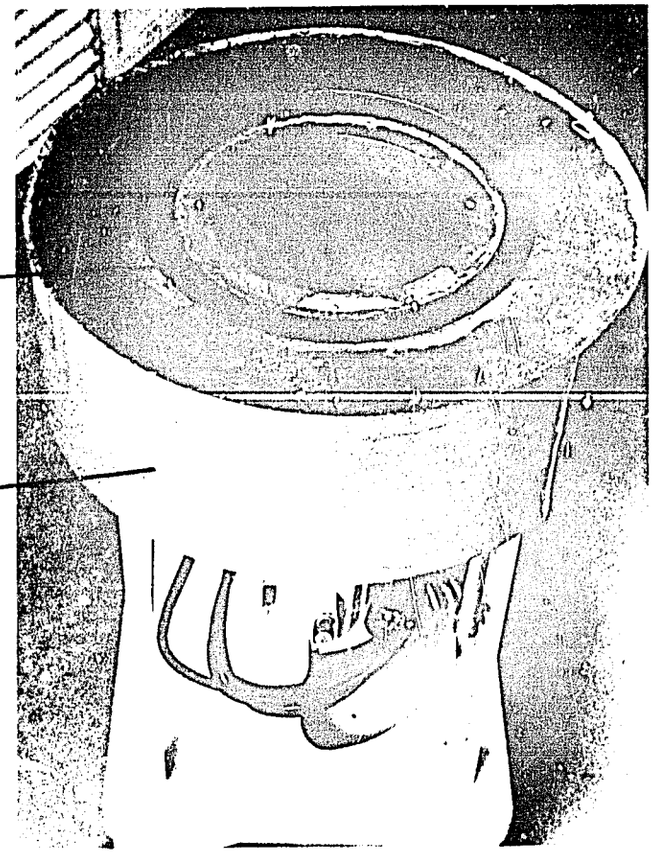

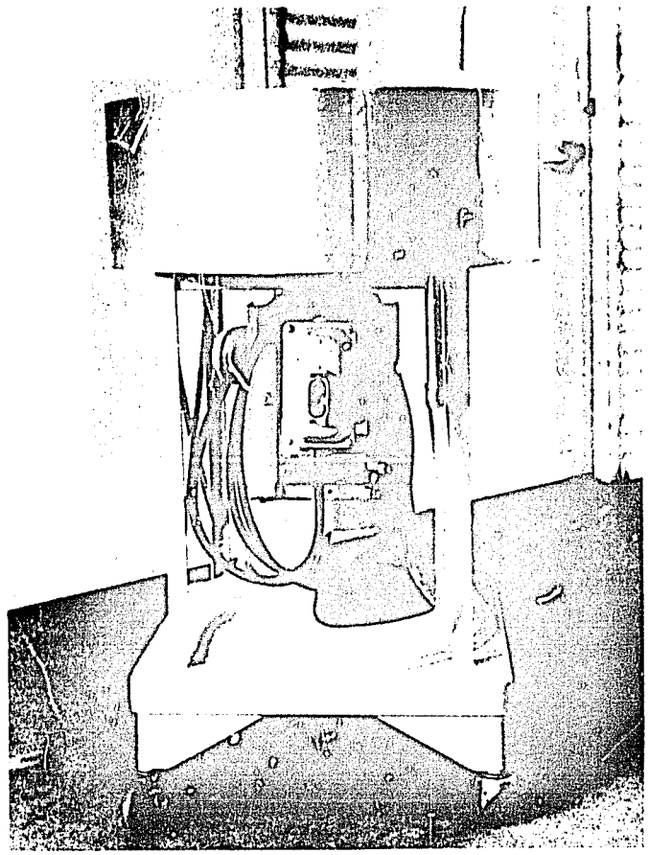

SIDE VIEW

TABLE 1. EFFECT OF FILTRATION METHOD ON PROTEIN AND SOLIDS CONTENT OF SLURRIES PREPARED FROM WHOLE SOYBEANS.

	INITIAL SLURRY			MILK FILTRATE			RESIDUE	
	Protein %	Solids %	Sediment %	Protein %	Solids %	Sediment %	Solids %	Protein %
	3.7	8.0	59	2.6	5.3	14	16.9	7.4
	3.5	7.5	62	2.6	6.1	12	16.3	7.5
Mean	3.6	7.8	61	2.6	5.7	13	16.6	7.5
				CRADLE FILTRATION				
	3.9	7.9	61	2.7	5.8	22	14.9	6.0
	3.5	7.5	64	2.8	5.6	26	14.7	6.5
Mean	3.7	7.7	62	2.7	5.7	24	14.8	6.3
				CENTRIFUGE FILTRATION				
	3.5	8.0	61	2.8	5.7	33	16.8	7.0
	3.4	8.2	63	2.9	5.9	33	16.9	7.2
Mean	3.4	8.1	62	2.8	5.8	33	16.8	7.1

TABLE 2. EFFECT OF FILTRATION METHOD ON COMPONENT YIELDS OF SLURRIES PREPARED FROM WHOLE SOYBEANS.

	INITIAL SLURRY		FILTRATE - MILK				RESIDUE			
					% YIELD				% YIELD	
	Product lb.	Protein lb.	Product lb.	Protein lb.	Product	Protein	Product lb.	Protein lb.	Product	Protein
SOCK FILTRATION										
	22	.82	16.4	.43	74.5	52.8	5.6	.39	25.5	47.2
	22	.77	16.2	.42	73.6	54.7	5.8	.35	26.4	45.3
Mean	22	.80	16.3	.43	74.1	53.8	5.7	.37	25.9	46.2
CRADLE FILTRATION										
	22	.85	15.3	.41	69.5	48.2	6.7	.44	30.5	51.8
	22	.77	15.1	.43	68.6	54.9	6.9	.34	31.4	45.1
Mean	22	.82	15.2	.42	69.1	51.6	6.8	.39	30.9	48.4
CENTRIFUGE FILTRATION										
	22	.77	17.5	.49	79.5	63.6	4.5	.28	20.5	36.4
	22	.75	17.5	.50	79.5	67.7	4.5	.25	20.5	32.3
Mean	22	.76	17.5	.50	79.5	65.7	4.5	.26	20.5	34.3

Examination of the data shows little difference, in the protein, solids and percent sediment values for the initial slurries, Table 1. This is to be expected since all the slurries tested were made using the same procedure.

The milk filtrates obtained from the three filtration methods differed only slightly in protein and solids content. However, sedimentation values differed markedly. The sock gave the lowest value, followed by cradle and the centrifuge, Table 1. The reduced amount of sediment in the filtrate from the sock filter may be due to a more nearly optimum method of squeezing or applying pressure during filtration.

There was a difference in the total amount of product produced by each of the devices. The centrifuge was the most efficient in separating the milk filtrate from the residue, followed by the sock and then the cradle. This is shown in the percent yield product column of Table 2. However, the filtrate prepared with the centrifuge exhibited the highest sedimentation value which generally indicates poorer mouth feel. Further examination, Tables 1 and 2, indicates that from an overall statistics standpoint, centrifuge filtration is the most effective. Sock filtration would rate second and cradle last. However, other facts should be considered before a filter preference is suggested. The centrifuge filter requires an electric motor that can be operated in a vertical position, and the cost of construction of the centrifuge basket and draining chamber would be substantial as compared to the sock filter. The sock filter offers clear advantages over the more expensive cradle filter. The sock method is by far the simplest and least expensive of the three. Thus, when all factors are considered, the sock method is superior and is recommended for preparation of soy beverage for home and village use.

6. Evaluation of Sock and Centrifuge Filtration Methods Using Cracked Beans and Soy Flour.

Whole soybeans were used for making up the soy slurry for testing the three filtering devices. In this study the soy slurry was made with ground soy flour or cracked soybeans. The main objective of this work was to determine if the protein content of the filtered beverage would be increased by changing the form of soybean used in preparation of the slurry or by use of different filtering devices.

The broken or cracked beans were prepared by running cleaned, whole raw soybeans through a burr mill. The burr mill is equipped with two corrugated plates whose surfaces during rotation are separated. When the diameter of the whole soybean is larger than the space between the corrugated plates, the soybeans are cracked and broken. For our purposes, the space was set at 0.150 inches. The average cotyledon was broken into about three pieces.

The soybean flour was prepared with the Decker hammermill. This hammermill was tested and evaluated for milling performance and the results are presented in another section of this report. Raw soybean flour for this study was prepared by passing the material through the mill using the 3/8" screen. This material was again passed through the mill using the 3/16" screen.

The slurries were produced using the same method illustrated in Figure 1, except for the substitution of the cracked soybeans or soybean flour for whole soybeans. A control slurry was also prepared from whole soybeans and included in this investigation.

For this study, only the sock and centrifuge methods of filtration were used. They were shown to be the most desirable in the previous study which evaluated the various filtration methods. Proteins, solids and sediment values were taken on all beverages produced. Solids were determined by the AOAC vacuum oven method. Protein was determined by multiplying Kjeldahl nitrogen by the factor 6.25. Percent sediment was determined by allowing 100 ml of beverage to stand for 24 hours at 34°F in a 100 ml graduated cylinder and reading the level of sediment. The data is presented in Table 3.

It appears, from examination of the data in Table 3, that the resulting beverage does not increase significantly in protein content when the form of soybean used to make the slurry is varied but the filtration method is standard. Also, there was little change in the percent sediment values obtained from the different slurries. This was true for both the sock and centrifuge methods of filtration. However, as noted in the first study in which only whole beans were used for preparation of slurries, centrifuge filtration resulted in much higher sediment values for all types of soy slurries than was found with the sock filter.

Yields of milk filtrate and residue from sock and centrifuge filtration were comparable to those obtained in the previous study, Table 4. It is also apparent from examination of Tables 3 and 4 that protein and solids content and yield of milk filtrate were generally similar in runs prepared from whole, broken or powdered soybean slurries. Thus, it appears, from the standpoint of filtration, that all forms of raw soybean are acceptable for preparation of soy slurries. Finally, this work generally confirms conclusions reached in the first study. When all factors are considered the sock filter is by far the most desirable method for filtering soy slurries to produce a milk filtrate for home or village use.

7. Effectiveness of Hand-grinding as Compared with Waring Blender Grinding in Preparation of Soy Slurries Filtered Only by Sock Method.

The usual method for preparation of the slurry generally employed a large Waring blender to reduce the particle size of the blanched beans prior to additional cooking and filtration. This method works well but presents the problem of high cost for the blender. A large Waring blender, like the type generally used in these experiments costs about $325. This is the most expensive item in the process and its cost would eliminate use of this method by many individuals in developing countries.

In this investigation, the concept of using a hand grinder rather than the Waring blender was studied. The purpose of the study was to determine if the hand grinder would reduce particle size of the soybean slurry sufficiently and allow satisfactory yields of soy beverage at acceptable protein concentrations.

TABLE 3. EFFECT OF SOCK OR CENTRIFUGE FILTRATION ON PROTEIN, SOLIDS AND SEDIMENT CONTENT OF SLURRIES PREPARED FROM WHOLE, CRACKED OR POWDERED SOYBEANS.

SOCK FILTRATION

	WHOLE BEAN SLURRY			MILK FILTRATE			RESIDUE	
	Protein %	Solids %	Sediment %	Protein %	Solids %	Sediment %	Solids %	Protein %
	3.8	8.1	57	2.5	5.5	13	16.8	7.6
	3.4	7.8	63	2.6	5.9	15	16.4	7.2
Mean	3.6	8.0	60	2.6	5.7	14	16.6	7.4

	SOY FLOUR SLURRY			MILK FILTRATE			RESIDUE	
	Protein %	Solids %	Sediment %	Protein %	Solids %	Sediment %	Solids %	Protein %
	3.5	8.0	58	2.8	5.7	11	16.3	7.1
	3.8	7.8	64	2.6	5.5	14	16.7	7.3
Mean	3.6	8.0	61	2.7	5.6	12	16.5	7.2

	BROKEN BEAN SLURRY			MILK FILTRATE			RESIDUE	
	Protein %	Solids %	Sediment %	Protein %	Solids %	Sediment %	Solids %	Protein %
	3.5	8.2	59	2.7	5.8	16	16.7	7.6
	3.6	7.9	65	2.7	5.6	14	16.5	7.2
Mean	3.6	8.0	62	2.7	5.7	15	16.6	7.4

TABLE 3 (Cont'd)

CENTRIFUGE FILTRATION

	WHOLE BEAN SLURRY			MILK FILTRATE			RESIDUE	
	Protein %	Solids %	Sediment %	Protein %	Solids %	Sediment %	Solids %	Protein %
	3.7	7.7	59	2.8	5.7	33	16.9	7.2
	3.5	8.2	64	2.9	5.9	33	16.5	7.6
Mean	3.6	8.0	62	2.8	5.8	33	16.7	7.4

	SOY FLOUR SLURRY			MILK FILTRATE			RESIDUE	
	Protein %	Solids %	Sediment %	Protein %	Solids %	Sediment %	Solids %	Protein %
	3.6	7.9	62	2.8	5.8	28	16.6	7.4
	3.7	8.1	64	2.8	6.0	29	16.4	7.0
Mean	3.7	8.0	63	2.8	5.9	28	16.5	7.2

	BROKEN BEAN SLURRY			MILK FILTRATE			RESIDUE	
	Protein %	Solids %	Sediment %	Protein %	Solids %	Sediment %	Solids %	Protein %
	3.8	7.8	61	2.9	6.0	27	16.4	7.2
	3.5	7.9	65	2.7	5.8	30	16.9	7.3
Mean	3.6	7.8	63	2.8	5.9	28	16.6	7.1

TABLE 4. EFFECT OF SOCK AND CENTRIFUGE FILTRATION ON COMPONENT YIELDS OF SLURRIES PREPARED FROM WHOLE, CRACKED OR POWDERED SOYBEANS.

SOCK FILTRATION

	WHOLE BEAN SLURRY		MILK FILTRATE				RESIDUE			
					% YIELD				% YIELD	
	Product lb.	Protein lb.	Product lb.	Protein lb.	Product	Protein	Product lb.	Protein lb.	Product	Protein
	22	.84	16.3	.41	74.1	49.0	5.7	.43	25.9	51.0
	22	.75	16.4	.43	74.5	57.1	5.6	.32	25.5	42.9
Mean	22	.79	16.4	.42	74.3	53.0	5.7	.37	25.7	47.0

	SOY FLOUR SLURRY		MILK FILTRATE				RESIDUE			
					% YIELD				% YIELD	
	Product lb.	Protein lb.	Product lb.	Protein lb.	Product	Protein	Product lb.	Protein lb.	Product	Protein
	22	.77	16.1	.45	73.2	58.6	5.9	.32	26.8	41.4
	22	.84	16.1	.42	73.2	50.1	5.9	.42	26.8	49.9
Mean	22	.80	16.1	.43	73.2	54.4	5.9	.37	26.8	45.0

	BROKEN BEAN SLURRY		MILK FILTRATE				RESIDUE			
					% YIELD				% YIELD	
	Product lb.	Protein lb.	Product lb.	Protein lb.	Product	Protein	Product lb.	Protein lb.	Product	Protein
	22	.77	16.2	.44	73.6	56.7	5.8	.33	26.4	43.3
	22	.79	16.4	.44	74.5	55.9	5.6	.35	25.5	44.1
Mean	22	.78	16.3	.44	74.1	56.3	5.7	.34	26.0	43.7

TABLE 4 (Cont'd)

CENTRIFUGE FILTRATION

	WHOLE BEAN SLURRY		MILK FILTRATE				RESIDUE			
					% YIELD				% YIELD	
	Product lb.	Protein lb.	Product lb.	Protein lb.	Product	Protein	Product lb.	Protein lb.	Product	Protein
	22	.81	17.3	.48	78.6	59.5	4.7	.33	21.4	40.5
	22	.77	17.6	.51	80.0	66.2	4.4	.26	20.0	33.8
Mean	22	.79	17.4	.50	79.3	62.8	4.6	.30	20.7	37.1

	SOY FLOUR SLURRY		MILK FILTRATE				RESIDUE			
					% YIELD				% YIELD	
	Product lb.	Protein lb.	Product lb.	Protein lb.	Product	Protein	Product lb.	Protein lb.	Product	Protein
	22	.79	17.0	.48	77.3	60.1	5.0	.32	22.7	39.9
	22	.81	17.4	.49	79.1	59.8	4.6	.33	20.9	40.2
Mean	22	.80	17.2	.48	78.2	60.0	4.8	.32	21.8	40.0

	BROKEN BEAN SLURRY		MILK FILTRATE				RESIDUE			
					% YIELD				% YIELD	
	Product lb.	Protein lb.	Product lb.	Protein lb.	Product	Protein	Product lb.	Protein lb.	Product	Protein
	22	.84	17.2	.50	78.2	59.7	4.8	.34	21.8	40.3
	22	.77	17.4	.47	79.1	61.0	4.6	.30	20.9	39.0
Mean	22	.80	17.3	.48	78.6	59.8	4.7	.32	21.4	39.6

Two pounds of cleaned Bonus 1973 whole dry soybeans were added to 20 pounds of boiling tap water in a steam jacketed kettle. This material was simmered for ten minutes. The blanched beans were then drained, and the blanch water was put aside for later use.

The drained beans were ground in the hand grinder. During the ten minute blanch, the beans hydrated and doubled in size which resulted in more tender tissue. Thus, the beans were easily ground to a fluffy consistency, occupying about three times their intact volume.

The ground beans were added back to the blanch water and returned to the steam kettle for an additional 20 minute simmering with constant agitation. The simmered slurry was again weighed and adjusted with water to 22 pounds. A control was prepared as described in Figure 1, using the Waring blender for grinding the slurry. The sock method of filtration was the only one employed.

Protein, solids, and percent sediment analysis, as described above, were performed on the slurry produced and the filtrate obtained. Residue was only analyzed for solids and protein. All data are presented in Table 5. It is evident from the data in the tables that the beverage (milk filtrate) obtained from the hand ground slurry is of substantially lower protein content than the beverage obtained from the Waring blender slurry. It may also be noted from Table 5 that the residue left, after filtration of the hand-ground slurry, is proportionately higher in protein content than the residue remaining after filtration with the Waring blender slurry. This shows that when the slurry is prepared using the hand-grinder, instead of the Waring blender, protein that normally is filtered from the slurry into the beverage, remains in the residue.

Yields of the milk filtrate and residue are presented in Table 6. Examination of this table shows that yield of filtrate was similar from slurries prepared by hand grinding and the Waring blender. However, the amount of protein in the filtrate is substantially higher when the Waring blender is used. Thus it is apparent that hand grinding, using the equipment and the technique described, does not release the protein from the tissue as effectively as does Waring blender grinding. This suggests two alternatives. First, that further work should be done in an effort to improve protein extraction with the hand grinding method. This might be accomplished by development of more desirable technique using the present grinder or by finding another hand grinder which would be more effective. Second, the residue may be prepared or processed into highly nutritious and acceptable weaning or breakfast foods and meat substitutes. The concept of using a low cost hand grinder is highly desirable and investigations in this area should be encouraged.

8. Mill for Grinding Dry Soybeans and Various Cereal Products.

The concepts for preparation of soy based products at the village level generally require that beans and other cereals be broken and/or ground before processing. Thus, a low cost mill that would be suitable for breaking or coarse grinding raw materials for either a small industry or for village use as a cooperative utility appears highly desirable. This mill must be suitable

TABLE 5. EFFECT OF SOCK FILTRATION ON PROTEIN SOLIDS AND SEDIMENT CONTENT OF SLURRIES PREPARED FROM WHOLE SOYBEANS AND GROUND WITH WARING BLENDER OR HAND GRINDER.

	INITIAL SLURRY			MILK FILTRATE			RESIDUE	
	Protein %	Solids %	Sediment %	Protein %	Solids %	Sediment %	Protein %	Solids %
WARING BLENDER SLURRY								
	3.7	8.0	59	2.6	5.3	14	7.4	16.9
	3.5	7.5	62	2.6	6.1	12	7.5	16.6
Mean	3.6	7.8	61	2.6	5.7	13	7.5	16.8
HAND-GROUND SLURRY								
	3.7	8.3	70	2.2	5.2	14	10.0	19.0
	3.6	8.2	71	2.0	5.8	16	9.8	18.5
Mean	3.6	8.2	70	2.1	5.5	15	9.9	18.8

TABLE 6. EFFECT OF SOCK FILTRATION ON COMPONENT YIELDS OF SLURRIES PREPARED FROM WHOLE SOYBEANS AND GROUND WITH WARING BLENDER OR HAND GRINDER.

WARING BLENDER SLURRY - YIELDS

	INITIAL SLURRY		MILK FILTRATE				RESIDUE			
					% YIELD				% YIELD	
	Product lb.	Protein lb.	Product lb.	Protein lb.	Product	Protein	Product lb.	Protein lb.	Product	Protein
	22	.814	16.5	.429	75.0	52.7	5.5	.385	25.0	47.3
	22	.770	16.3	.424	74.1	55.1	5.8	.346	25.9	44.9
Mean	22	.792	16.4	.426	74.6	53.9	5.6	.366	25.4	46.1

HAND GROUND SLURRY - YIELDS

	INITIAL SLURRY		MILK FILTRATE				RESIDUE			
					% YIELD				% YIELD	
	Product lb.	Protein lb.	Product lb.	Protein lb.	Product	Protein	Product lb.	Protein lb.	Product	Protein
	22	.814	16.2	.356	73.6	43.7	5.8	.458	26.4	56.3
	22	.792	16.4	.328	74.5	41.4	5.6	.464	25.5	58.6
Mean	22	.803	16.3	.342	74.0	42.6	5.7	.461	26.0	57.4

for grinding dry materials, be of relatively high capacity and low in cost. Considering these requirements, the mill would be fabricated from mild or hardened steel and be suitable for use with dry products.

During the previous contract year, ending March 31, 1975, a canvass of manufacturers of low cost mills was made in the U.S. No effort was made outside the U.S. and it may be possible to find low cost mills that are manufactured in other countries. However, a previous survey, (1971) under a USAID contract in India, indicated that equipment made in the U.S. was generally more versatile and of lower price than similar equipment manufactured in other countries. Letters were sent to 85 companies and replies were received from 60 firms. However, of the 60 replies only about 21 appeared to be of interest or possible value for this project. Prices of these grinders or mills ranged from under $1,000.00 to nearly $7,000.00. Some items were used, rebuilt units and the most expensive were constructed of stainless steel. One mill, offered by the Decker Mfg. Co. of Rockford, Illinois, was purchased and received about May 1, 1976. This is a typical hammermill which is equipped with three screens that range in screen size openings from 1/8" to 3/8". The unit is constructed of mild and hardened steel and, inclusive of screens, was priced at $704.00 and labeled as the Grainmaster Hammermill. The mill was evaluated for grinding dry soybeans, dry corn and a mixture of soybeans and corn.

Samples of whole soybeans (10% moisture), whole corn (15% moisture), and a 70:30 corn:soy mixture were ground using screens with 3/16", 1/4" and 3/8" circular holes. The size distribution of the ground product was measured using 15 different sieves. The results are summarized in Tables 7, 8, and 9, and Figures 5, 6, and 7. The smallest sized particles were obtained using mill screens with the smallest screen opening. More particles of about 1 or 2 mm diameter were produced when the smaller screens were used. For example, for soybeans ground using the 3/16", 1/4" or 3/8" screen, the amount of soy particles 2 mm in diameter or smaller was 68%, 56%, and 49% respectively. (Vertical line Fig. 5). Approximately equal particle size distributions were obtained for soybeans and for corn ground using the same screen (Fig. 5 and 6). Interestingly, more small particles resulted when a mixture of soy:corn was ground than when the soybeans or corn was ground separately, using the 3/16" screen.

This hammermill was clearly suitable as a coarse to medium grinder for raw soybeans and corn. A satisfactory ground material was obtained with all three screens tested. In general, it would be preferable to use the 3/8" screen since this would increase the mill output.

Preliminary tests indicated that ground raw soybeans can be prepared using the Grainmaster Hammermill for, (a) soy beverage made by the village process and (b) drum dried whole soy flakes. Results obtained using this mill during preparation of the soy beverage are presented elsewhere in this report.

9. Device for Separation of Hulls from Cotyledons.

A device was designed, constructed and tested for the separation of hulls and cotyledons from dehulled whole dry soybeans. Until now this laboratory has used a Key Equipment Co., grader for separating cotyledons from hulls

TABLE 7. SIZE DISTRIBUTION OF WHOLE SOYBEANS AFTER GRINDING WITH GRAINMASTER HAMMERMILL.

Sieve Opening (mm)	Mesh Size	% Total Weight of Ground Material Passing Through Sieve — Hammermill Screen Sizes: 3/16" Screen	1/4" Screen	3/8" Screen
4.0	5	100.0	98.2	89.4
2.8	7	98.4	85.5	73.7
2.5	8	94.6	75.4	63.9
2.0	9	67.7	56.1	48.9
1.4	12	49.2	34.2	30.9
1.0	16	31.2	22.9	16.6
0.85	20	23.7	17.2	11.8
0.71	24	20.7	15.5	10.9
0.60	28	15.7	11.4	7.6
0.50	32	10.4	7.6	5.1
0.43	35	10.4	5.4	5.1
0.36	42	7.6	0.4	4.3
0.13	115	0.4	0.4	0.4
0.09	170	0.0	0.0	0.0
0.04	325	0.0	0.0	0.0

TABLE 8. SIZE DISTRIBUTION OF WHOLE CORN AFTER GRINDING WITH GRAINMASTER HAMMERMILL.

Sieve Opening (mm)	Mesh Size	% Total Weight of Ground Material Passing Through Sieve — Hammermill Screen Sizes: 3/16" Screen	1/4" Screen	3/8" Screen
4.0	5	100.0	99.0	93.3
2.8	7	98.5	91.0	73.6
2.5	8	94.4	83.4	65.6
2.0	9	66.9	62.1	52.8
1.4	12	46.1	42.4	37.5
1.0	16	29.5	29.0	26.0
0.85	20	22.7	23.1	21.5
0.71	24	18.5	18.0	18.9
0.60	28	15.8	14.2	15.6
0.50	32	8.7	6.3	9.5
0.43	35	8.3	5.4	8.4
0.36	42	3.7	4.8	4.4
0.13	115	0.2	0.1	0.1
0.09	170	0.0	0.0	0.0
0.04	325	0.0	0.0	0.0

TABLE 9. SIZE DISTRIBUTION OF 30% SOY-70% CORN AFTER GRINDING WITH GRAINMASTER HAMMERMILL.

Sieve Opening (mm)	Mesh Size	% Total Weight of Ground Material Passing Through Sieve — Hammermill Screen Sizes		
		3/16" Screen	1/4" Screen	3/8" Screen
4.0	5	100.0	99.0	90.5
2.8	7	98.5	90.5	72.0
2.5	8	96.8	77.3	62.8
2.0	9	80.7	57.4	49.6
1.4	12	55.5	40.2	34.6
1.0	16	35.0	27.1	20.1
0.85	20	27.0	21.6	16.6
0.71	24	23.2	18.0	14.4
0.60	28	18.9	14.5	11.4
0.50	32	14.7	10.8	8.8
0.43	35	11.5	9.3	4.1
0.36	42	6.3	5.4	0.1
0.13	115	0.1	0.1	0.0
0.09	170	0.0	0.0	0.0
0.04	325	0.0	0.0	0.0

FIGURE 5. SIZE DISTRIBUTION OF WHOLE SOYBEANS GROUND WITH A DECKER GRAIN-MASTER HAMMERMILL

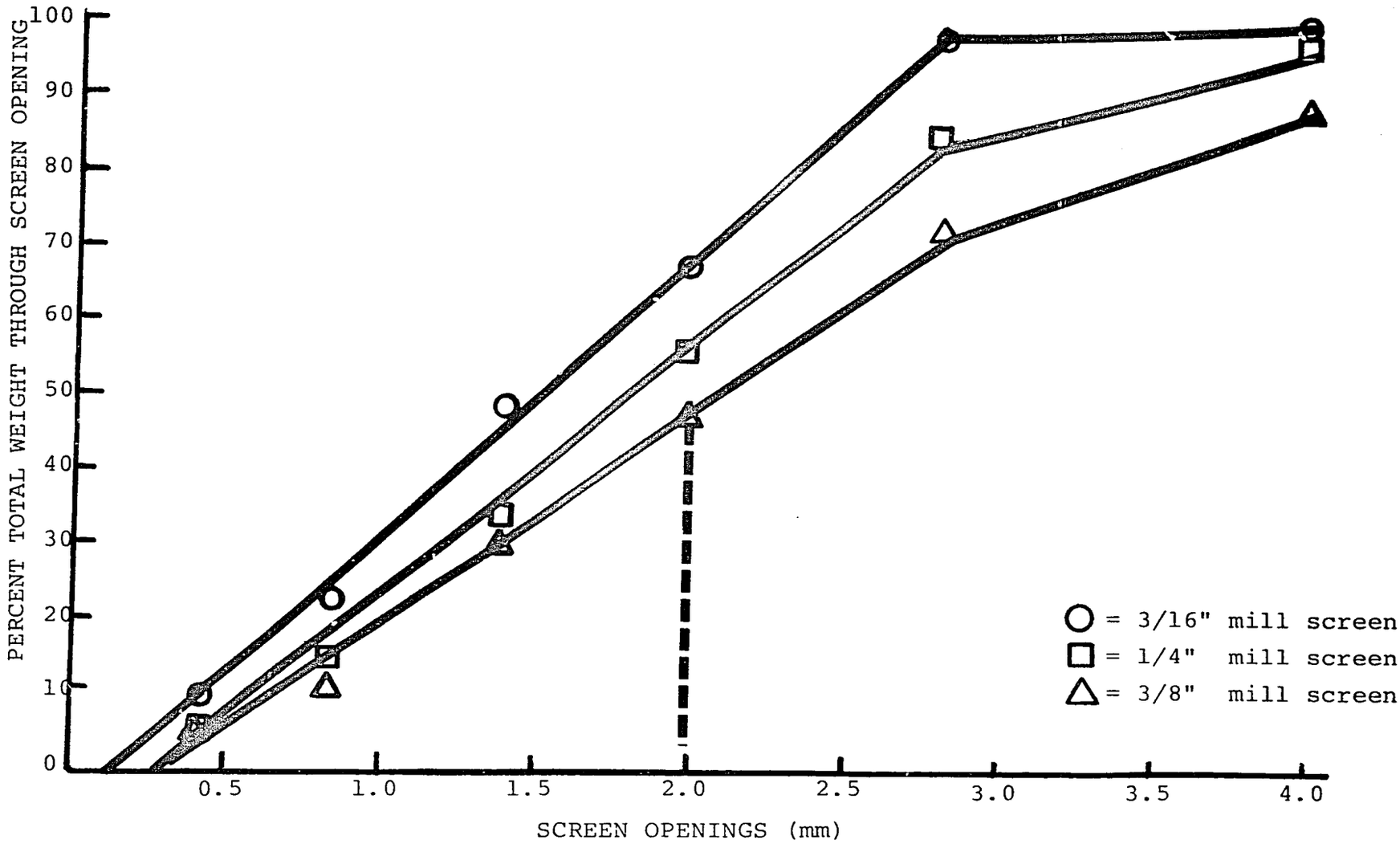

FIGURE 6. SIZE DISTRIBUTION OF WHOLE CORN GROUND WITH A DECKER GRAINMASTER HAMMERMILL

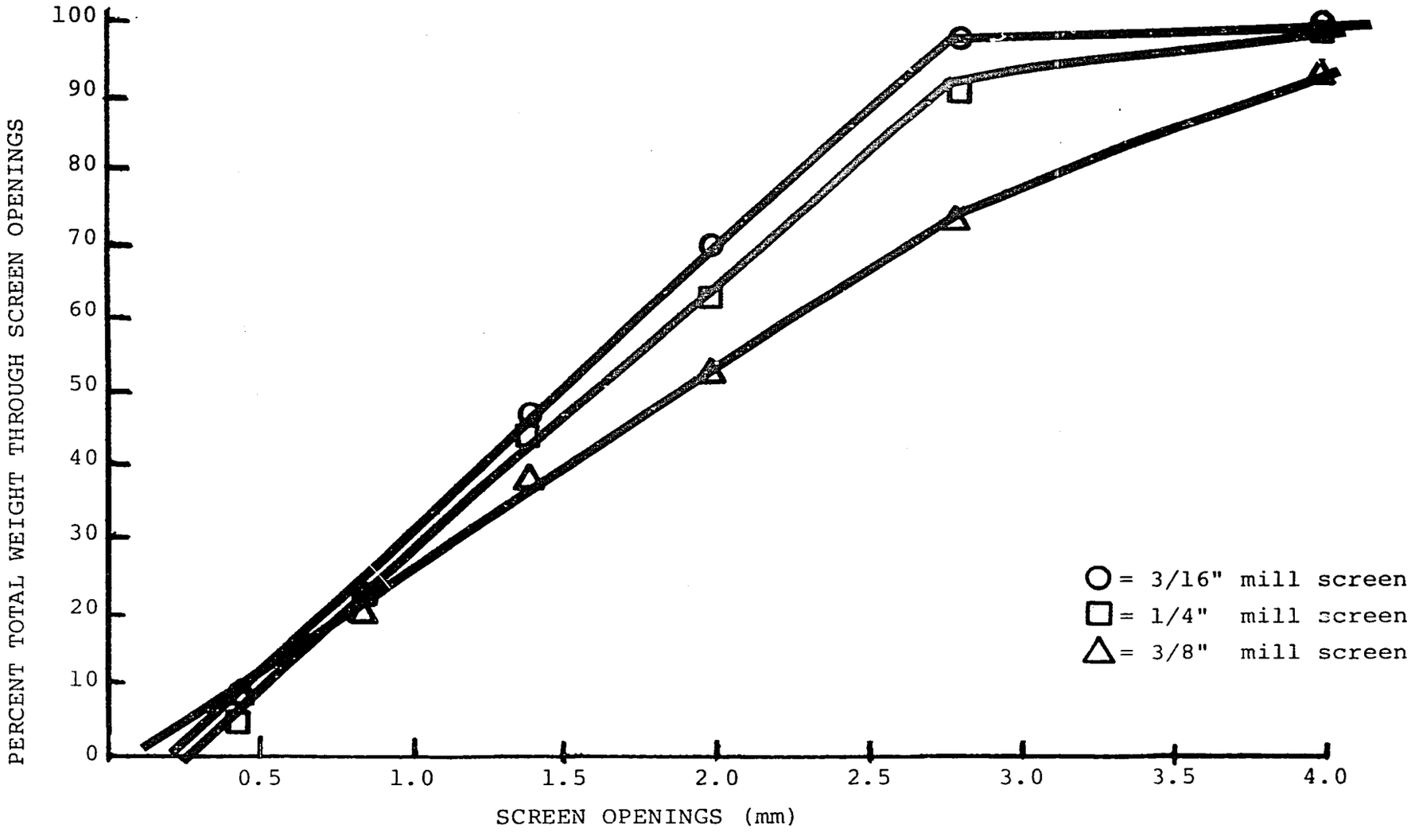

FIGURE 7. SIZE DISTRIBUTION OF CORN:SOY (70:30) GROUND WITH A DECKER GRAINMASTER HAMMERMILL

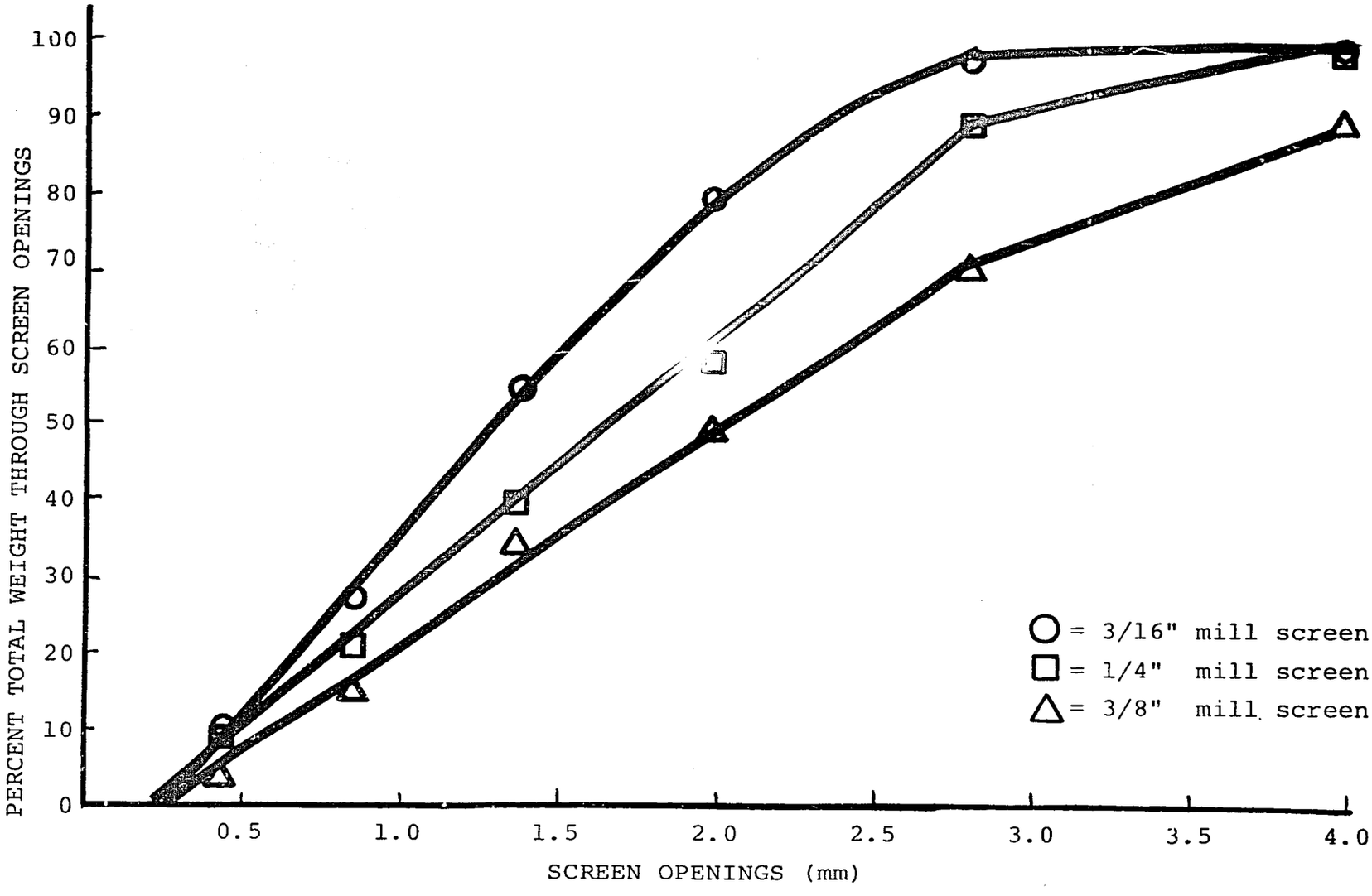

and hypocotyls. This unit was developed as a sample grader for evaluating size and amount of foreign material in shelled green peas. In using this equipment for soybeans the hulls are separated by dropping the dehulled and split beans through an upward moving air current. The air current entrains the hulls which are carried out of the machine but allows the cotyledons to drop to a lower level for collection. The Key sample grader is not well suited for use with dry soybeans. Two main problems occur. First, the sorter is overloaded by the volume of the hulls which decreases the efficiency of operation. To help overcome this, the air flow can be increased, but this results in a carry over of cotyledon pieces with the hulls. Second, the hulls are light in weight and they do not readily enter the air current from the feeder. Thus, a large portion of hulls are blown from the machine and onto the floor. The tube separator avoids these problems by using a different approach to hull removal.

Construction

The tube separator is diagramed in Figure 8. The body of the separator consists of a vertical four inch diameter plexiglass tube, three feet long. A rectangular feed tunnel, with interior measurements of $3\frac{1}{2}$" wide x 1" high x 10" long is mounted six inches from the top of the tube making a 50° angle with the tube. A loading hopper, with a sliding feed door, is attached to the top of the feed tunnel. The top of the separating tube is connected with a four inch diameter, four foot long flexible hose, to a squirrel cage blower (Torrington, Model FE 610 Airotor) powered by a 3450 rpm, 1/4 hp, Westinghouse electric motor. This blower is designed to deliver air at 200 cfm. A collection box is connected to the outlet of the blower to catch separated hulls. The bottom of the plexiglass tube is open and air flows rapidly up through the tube when the blower is operating so that hulls are carried upward and cotyledons fall out the lower end.

Preparation of Soybeans for Hull Separation

Cleaned field run whole Bonus (1973) soybeans were heated at 200°F for 15 min. and, while hot, passed through a drum dehuller. This dehuller, described by Spata (1973), consisted of a rotating knurled cylinder and a concave steel plate mounted about 1/4 inch from the surface of the cylinder. As the beans passed between the rotating cylinder and the stationary steel plate, the cotyledons were distorted and the hulls were broken away from the beans. The resulting mixture, hereafter described as cracked beans, was used as a feed for the tube separator.

Operation of the Tube Separator

In operation, the cracked bean mixture was fed through the feed tunnel and drawn into the tube by a combination of gravity and air flow. In the tube, the air velocity was approximately 1500 lineal ft/min., (as measured by a Alnor Velometer) which was sufficient to draw the hulls up the tube, through the blower and into the collector box. The cotyledons, on the other hand, were dense enough that they fell through the tube and were collected at the base.

FIGURE 8

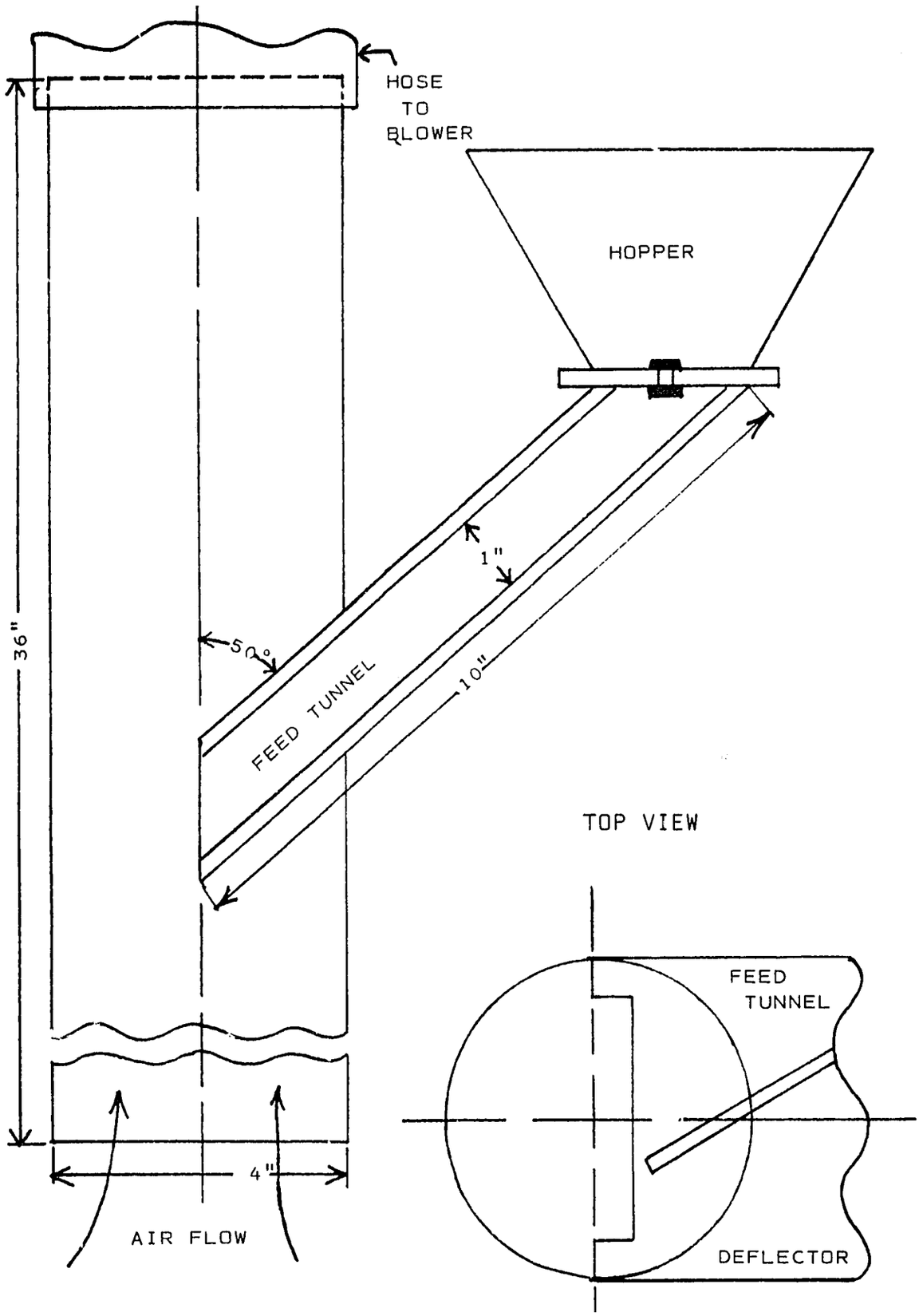
HOSE
TO
BLOWER
HOPPER
1"
50°
10"
FEED TUNNEL
36"
TOP VIEW
FEED
TUNNEL
4"
AIR FLOW
DEFLECTOR

During early tests it was noted that the cotyledons carried along some hulls as they dropped through the tube. To avoid this, a deflector was placed in the feed tunnel to direct the cracked beans to the inside surface of the tube. This encourages cotyledons to fall in a spiral path around the wall of the tube and thus tends to provide the hulls with a clear path to move up through the center area of the tube. In addition, the cotyledons travel a longer path around the inside surface of the tube which allows opportunity for more efficient hull separation.

Results

The tube separator was tested to determine the efficiency of hull removal using Bonus (1973) soybeans. Samples of whole raw beans were heated and passed through the drum dehuller resulting in the mixture containing cotyledons, hulls, hypocotyls and a few unbroken whole beans. The samples were then weighed and passed through the tube separator with a feed rate of approximately 5 lbs/min. The separated fractions were weighed. This step was repeated so that the beans received two passes through the separator. The whole beans, that passed through the dehuller and tube separator without breaking, were then removed using a 3/16" x 3/4" slotted screen which allowed the cotyledons to pass through but retained the whole beans. The cotyledons and included hypocotyls were subjected to 1/16" x 3/4" slotted screening to remove remaining hypocotyls. A flow chart of this procedure is presented in Figure 9.

Table 10 shows the performance data for the tube separator. The figures were calculated as percent by weight of only cracked beans. The weight of uncracked beans was substracted from the total weight after cracking since the weight of uncracked beans is a function of the dehuller operation and is independent of the operation of the tube separator. As seen from Table 10, seven trials were made. This resulted in a mean of 7.6% weight removal for one pass through the separator and 8.5% for two passes. After one pass there was an appreciable amount of hull remaining but after two passes there were very few hulls visible.

Samples of heated beans were divided by hand and separated into cotyledons, hulls and hypocotyls to determine the composition of the beans. The beans contained 90.7% cotyledon, 7.1% hull and 2.2% hypocotyl. As can be noted, the separator removed more material in two passes, (8.5%) than can be accounted for by hulls alone (7.1%). A portion of the hypocotyls was also removed by the tube separator and the sum of the remaining hypocotyls and the material removed by the separator is the same as the total composition of hulls and hypocotyls in the beans. Therefore, it appears that the tube separator removes virtually all the hulls along with approximately 64% of the hypocotyls.

A test was made to determine if there was also a loss of cotyledons during operation of the separator. A sample of cleaned cotyledons was passed through the separator five times and the loss for each pass determined. This resulted in a mean loss of 0.06%/pass.

FIGURE 9. Procedure for Testing the Tube Separator

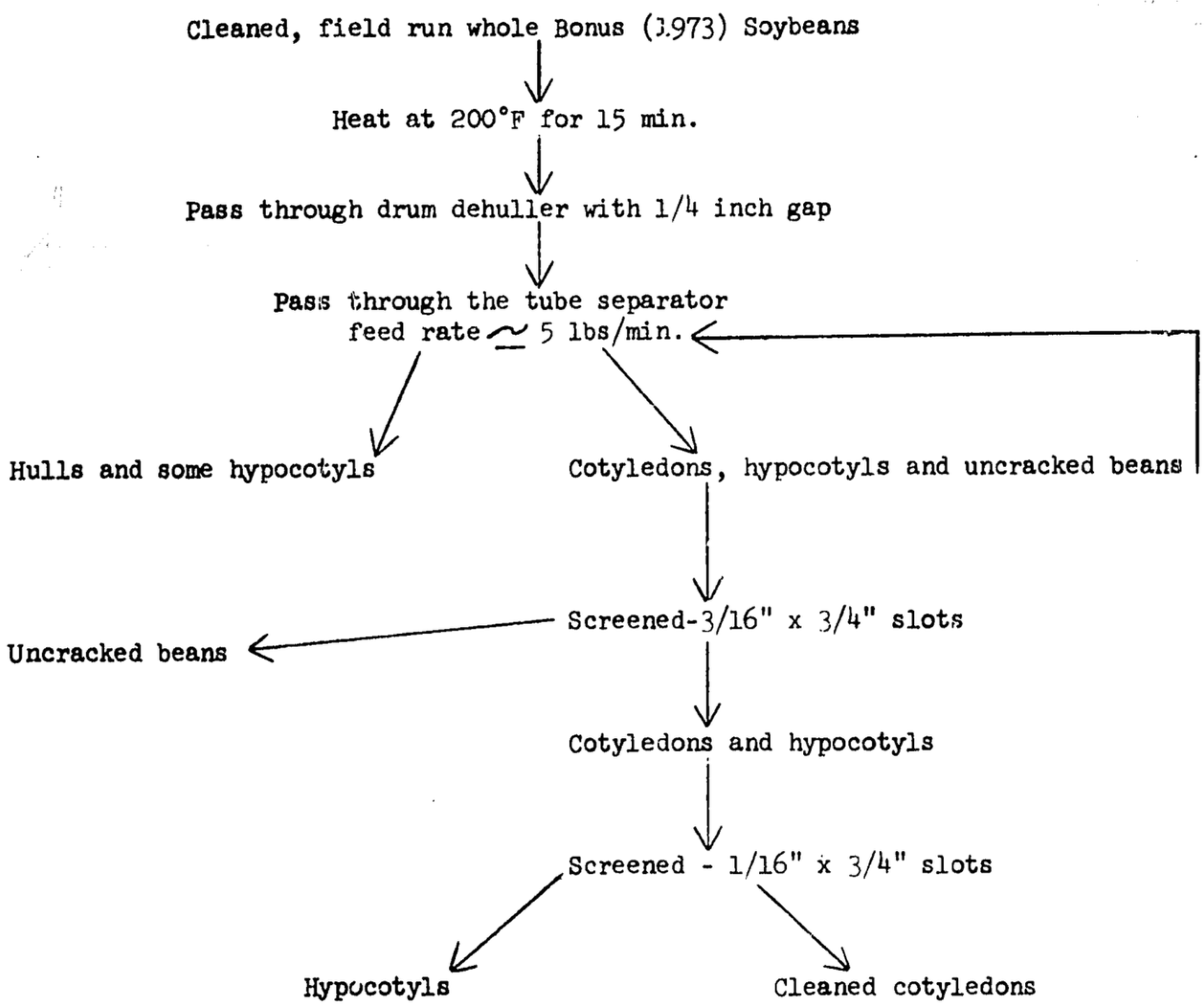

TABLE 10. TUBE SEPARATOR PERFORMANCE BASED ON CRACKED BEANS.

Trial	Hull Removal on first pass	Hull removal on second pass	Total hull removed	Hypocotyls remaining with cotyledons after two passes
	Values are percentages based on weight of cracked beans			
1	7.8	1.0	8.8	0.9
2	8.2	0.6	8.7	0.7
3	7.5	1.1	8.5	1.0
4	7.2	1.2	8.3	0.9
5	7.4	1.0	8.5	0.8
6	7.4	0.7	8.1	0.6
7	7.9	0.5	8.4	0.9
Mean	7.6	0.9	8.5	0.8

Conclusions

This work shows that a simple, easily constructed and operated device can be made to separate hulls from cotyledons in cracked soybeans. The device will separate virtually 100% of the hulls and approximately 64% of the hypocotyls with two passes through the tube at a flow rate of 5 lbs/min. per pass. This device offers a simple, low cost system that can be readily constructed in developing countries. Thus, many food products can be significantly improved if only cotyledons are used in their preparation.