AGENCY FOR INTERNATIONAL DEVELOPMENT
WASHINGTON, D. C. 20523

BIBLIOGRAPHIC INPUT SHEET

FOR AID USE ONLY

1. SUBJECT CLASSIFICATION
A. PRIMARY: Education
B. SECONDARY: General Education

2. TITLE AND SUBTITLE
Instructional film, optimizing its instructional effectiveness

3. AUTHOR(S)
Song, Yoo-jae

4. DOCUMENT DATE	5. NUMBER OF PAGES	6. ARC NUMBER
1974	70 p.	ARC

7. REFERENCE ORGANIZATION NAME AND ADDRESS
Florida State University, College of Education, Center for Educational Technology, Talahassee, Florida 32306

8. SUPPLEMENTARY NOTES *(Sponsoring Organization, Publishers, Availability)*

(Dissertation--Florida State

9. ABSTRACT

A review of the role of instructional films in learning and recommendations for effective uses of films in instruction. The research review includes such topics as early uses of instructional film, differences between film and television, the rationale for using instructional film, hypotheses concerning uses, film literacy, comparative research findings, the present status of research, and effective use of existing instructional films. The recommendations presented: (1) Future studies of the effectiveness of instructional film should systemtically assess the interactions between particular film attributes, learner characteristics, and learning objectives; (2) To accomplish this, evaluation tools for instructional films should be developed; (3) More studies should be conducted on the effectiveness of self-instructional films used for home study; (4) In-service teacher training programs should help teachers learn how to teach with films; (5) Instructional film use should be planned when the course is planned; (6) Students need to learn how to learn from instructional films, rather than regarding them as passive entertainment; (7) Teachers can assure this by providing instructional objectives, summaries, or questions before the film is shown; (8) Subject-matter specialists and production experts should work together to produce high-quality films; use of principles of programmed instruction should help produce better instructional films; (9) An instructional film should be tested and evaluated in an actual learning situation.

10. CONTROL NUMBER	11. PRICE OF DOCUMENT
PN-AAC-496	
12. DESCRIPTORS	**13. PROJECT NUMBER**
	14. CONTRACT NUMBER CSD-2945 211(d)
	15. TYPE OF DOCUMENT

AID 590-1 (4-74)

CSD-2945 211(d)
AAC-976

INSTRUCTIONAL FILM:
OPTIMIZING ITS INSTRUCTIONAL
EFFECTIVENESS

A paper submitted to
the Instructional Design
and Development Program
in partial fulfillment of Part I
of the Preliminary Examination
for the Degree of
Doctor of Philosophy

May 1974

Yoo Jae Song

TABLE OF CONTENTS

page

ABSTRACT iii

I INTRODUCTION 1

II THE ROLES OF INSTRUCTIONAL FILM 3

Background of Instructional Film 3
Differences between Film and Television in Instruction 3
Advantages and Limitations of Instructional Film 5

III INSTRUCTIONAL FILM AND LEARNING 10

Rationale 10
Some Theoretical Hypotheses on Film Research 14
Film Literacy 17

IV REVIEW OF SELECTED STUDIES 22

Comparative Research Period 22
Variable Research Period 26
Present Status of Research 36

V DISCUSSION 44

The Effective Use of Existing Instructional Films 48

VI RECOMMENDATIONS 57

BIBLIOGRAPHY 60

ABSTRACT

The use of film to complement regular classroom instruction is a common technique. An instructional film is of value only to the extent that it contributes to more effective learning by the students. Previous reviews of research indicate that the instructional film is a valuable teaching tool when properly used. However, there is nothing in instructional film presentation that guarantees better learning. If a better learning situation is to be provided, it is not enough to produce and present an instructional film.

This paper gives a comprehensive review of the role of instructional film and its relationship to learning. Also presented is a review of previous research concerning the use of instructional films and recommendations for effective use of film in instruction.

I

INTRODUCTION

Don't look at the movie.
Look at the people.
That's where the meanings are.
-David Berlo-

The use of film to complement regular classroom instruction is a common instructional technique. Since 1918 much research has been conducted and published about the effectiveness of film in instruction.[1] The major emphasis of audio-visual research was on film until mid-1950 when the major attention shifted to the use of television in instruction. Yet, the value of film in education should not be underestimated.

The practical application of the rich expression and communication possibilities of the film medium give a double meaning to this medium for educational purposes. As a means for providing instruction, the film is an instrument which is not merely suitable for making subject matter visible, but it is also possible for the subject matter to be experienced and enjoyed. It can be an important means for the student to

---

[1] In 1918, Sumstine's study, which is one of the pioneer researches of film in education, appeared in School and Society.

learn how to assimilate the subject matter (Peters, 1955).

An instructional film is of value only to the extent that it contributes to more effective learning and greater student comprehension. Instructional film influence depends not only on the content and the treatment of the film, but also on the characteristics of audience and the social and instructional situation in which the film is presented.

It can be said that film is a learning tool having considerable potential through the presentation of knowledge and ideas contributing something to learning which would otherwise be unavailable. However, the use of an instructional film does not guarantee more effective learning by the students. Consequently, there should be some effort to find better ways of using instructional films to achieve optimal learning for its viewers.

This paper has a twofold purpose. The first is to provide a comprehensive review of the role of instructional film and its relationship to learning. The other is to suggest more effective ways of using instructional films by reviewing research on the use of film in instruction.

The search and survey of the related literature is based on journals, educational indices, ERIC documents, dissertation abstracts, technical reports, and related books.

II

THE ROLES OF INSTRUCTIONAL FILM

Background of Instructional Film

The first motion picture, Edison's Kinetoscope, was introduced in 1894, but it could be viewed by only one person at a time. Eastman's invention of celluloid in 1889 and its later improvement as a film base led to the development of projectable films.

Between 1894 and 1925, films were developed without sound. By 1930, sound movies in 35mm form had become well developed and standardized. Now films in 70mm, 35mm, 16mm, 8mm, and super 8mm (since 1965) are available.

Films designed specifically for classroom use are usually called instructional films and are available to schools of all levels through various service agencies.

Differences between Film and Television in Instruction

It is a fallacy to consider that because of the close similarity between Instructional Film and Instructional Television the results from ITV research can be applied directly to instructional film.

Davies (1973) has explained that to a very large extent, film and television can be regarded as substantially identical media, although the two forms of presentation tend

to be used rather differently in instruction. Television, on the whole, tends to be used either as an alternative to live teaching or as a means of allowing students to observe themselves or others at work. On the other hand, films are used for a wider range of situations. However, there is still a tendency to restrict them to dramatic or theatrical presentations, field trips or travelogues, and demonstrations of particular phenomena [p. 117].

Dale (1969) has listed the major differences between them as follows:

(a) Film lacks the immediacy of live television. It cannot show us the actual event in the process of its occurrence, i.e., an on-the-spot telecast. Even though a film must leave out something of the original reality that it presents, it still can be more real than the reality itself using proper editing techniques.

(b) It is usually easier to record a wide range of stimulus materials on film from many different locations, i.e., it can bring the outside world into the classroom.

(c) Film can be used in classrooms that do not have access to television.

(d) Film can be reviewed several times if desired.

(e) Film can be used for self-instructional situations, especially for teaching laboratory, language, and reading skills.

In summary, the television has the greater convenience when delivered via cable to the classroom while the film allows projection on a large screen. Moreover, libraries of programs, and organization of production and marketing are more readily available on instructional film than on television. Greater freedom, variety, and flexibility in film presentation are available because of film processing, editing, and the rich

library of experimental films built up over the past decades. Thus, film and television have different roles to play in instruction.

For recent reviews of the literature on the effectiveness of instructional television, the reader should refer to Chu and Schramm (1967) and Dubin and Hedley (1969).

Advantages and Limitations of Instructional Film

Film characteristics which need evaluation for instructional use were described by Smith and Van Ormer (1951) as follows:

Color
Music
Emphasizers to direct attention
Voice characteristics
Multiple sensory presentation
Esthetic tone or artistic qualities
Emotional tone
Dramatic vs. Factual presentation
Humor
Personalized Commentator
Units clearly marked off
Pacing and rate of development
Verbalization characteristics
Time relations of sound track and picture
Fact frequency and film length
Animation
Modified motion
Camara viewpoint and perspective[p.1].

The evolution of the instructional film has been largely a result of the stimulus of wartime demands and the new experiences for training large numbers of people in a short time. As a result of research conducted in instructional film use, it is clear that there are both advantages and limitations to instructional films.

A. Advantages

The twelve basic advantages were summarized by Dale (1969). Film can:

(1) Present certain meanings involving motion
(2) Compel attention
(3) Heighten reality
(4) Speed up or slow down time
(5) Enlarge or reduce the actual size of objects
(6) Bring the distant past and the present into classrooms
(7) Provide an easily reproduced record or an event
(8) Create reality, reveal the invisible
(9) Build a common denominator of experience
(10) Influence and even change attitudes
(11) Promote an understanding of abstract relationships
(12) Offer a satisfying esthetic experience

Flory (1971) has indicated flexibility, repeatability, accessibility, creativity and compatibility with other media including TV, computers, books, tape recorders, overhead projectors, slides, and filmstrips as advantages of instructional film.

Davis (1931) has emphasized the repeatability, since this factor is not present when a lecturer has but an hour with his audience and anything which cannot be captured by the printed word vanishes with him.

It is interesting to find that only some of these advantages were emphasized before 1950. Stanford and Mackeith (1949) have divided the advantages into two categories. On the objective side film presentation is convenient for demonstrations that do not always work smoothly in front of a class, for illustrations that are costly to present in actuality each year or fixed objects that the students cannot

conveniently visit. The subjective advantages are that because films are costly to make, they may contain more careful pedagogy than any teacher could be expected to provide continuously. The authors also indicated that the method of presentation of films in a darkened room is advantageous for optimum concentration.

According to Fern and Robbins (1947) a good instructional film should have a strong correlation between the content of the film and the learning situation, accuracy of information, good instructional technique as a built-in feature, and satisfactory technical quality of production.

B. Limitations

What are the limitations of instructional film, or motion pictures when applied in education? Fern and Robbins (1947) identified cost, mechanical problems, adaptability, and projection facilities as limitations. Dale (1969) listed seven limitations -- effectiveness and expensiveness, incorrect time concepts, incorrect size concepts, distorted impressions or conclusions, student comprehension, administration and mechanical difficulties, and instructor's role (additional time and effort are required).

In his book Film and Education, Elliotte described some limitations as follows:

> ....One limitation to use of motion picture in education is cost. Good films are expensive to produce and to buy....A second limitation is that films are perishable and do not withstand wear and tear like many other less expensive teaching materials (such as books)....A third limitation is

> that teachers often have difficulty securing a film when it is most needed....Finally, there are limitations inherent in the nature of the motion picture itself. It moves too fast on the screen for contemplative study unless projected many times.

In summary, the limitations of film can be categorized as:

(a) Cost

Expensiveness and effectiveness do not always balance. Film cost is getting cheaper comparatively, however, it still remains as a problem.

(b) Student Perception and Comprehension

Film may give incorrect time and size concepts to the young students. Distorted impressions or conclusions may be derived by the students.

(c) Administration and Mechanical Problem

Some teachers cannot work well with instructional film or any other instructional devices, therefore, they avoid them. Administration and scheduling may cause a problem.

(d) Instructor's Role

For the teacher, additional teaching time and effort are required for optimum film communication.

The above limitations should be considered when a film instruction is designed or when a new instructional film is produced.

TABLE 1 Summary: Advantages & limitations of Instructional Film

Advantages		Limitations	
Dale (1969)	Motion Compel attention Heighten reality Speed up or slow down time Enlarge or reduce the actual size of objects Bring the distant past and the present into classrooms Provide an easily reproduced record of an event Create reality, reveal invisible Build a common denominator of experience Influence and change attitudes Promote an understanding of abstract relationships Offer a satisfying esthetic experience	Dale (1969)	Effectiveness and expensiveness Incorrect time concepts Incorrect size concepts Distorted impressions or conclusions Student comprehension Administration and mechanical difficulties and instructor's role
Davis (1931)	Repeatability	Elliotte (1948)	Cost Perishable Teachers have difficulty securing films Move too fast on the screen for contemplative study
Flory (1971)	Accessibility Creatibility Flexibility Repeatability Compatibility with other media		
Stanford & Mackeith (1949)	Convenient for demonstration May contain more careful pedagogy Compel attention	Fern & Robbins (1947)	Cost Mechanical problems Adaptability Projection facilities
Fern & Robbins (1947)	Good instructional technique is a built-in feature		

III

INSTRUCTIONAL FILM AND LEARNING

Rationale

The Commission on Instructional Technology declared that the heart of education is the student learning, and the value of any technology used in education must therefore be measured by its capacity to improve learning[Tickton (ed.), 1970, p.9]. The objectives of the instructional film research programs are to seek facts and principles which will make it possible to improve generally the effectiveness of instructional films when employed for learning. Film serves many functions: (a) The film is a means of expression, a language and an art, based on modern technology; (b) The film is an aid to learning, autonomously, or more usually, as a means for multiplying and reinforcing the teacher's role; (c) The film is an instrument of research (Maddison, 1966).

It can be said that the idea of using film in education for instructional purposes was developed from the experience of military training in the most effective way in the shortest possible time by using films. According to Fern and Robbins (1947):

> ....In a sense, it has taken a war to fulfill an inventor's dream. When Thomas A. Edison conceived the idea of projecting moving pictures on a screen, he foresaw his inventions as a new tool for education....It was not until the emergency of

> war that motion picture and other types of instructional films were fully recognized for what they are - machine tools of modern education - and utilized extensively in national programs of instruction [p.9].

The Bureau of Naval Personnel of the U.S. Navy Department has listed the following reasons for using instructional film as training aids: (a) to learn more, (b) to remember longer, (c) to increase interest, (d) to make training uniform, (e) to build morale, and (f) to save time (Fern and Robbins, 1947).

Based on reviews, digests, and analyses of experimental reports from various areas of learning, including learning from films, Simth and Van Ormer (1949) have outlined their statement of learning principles.[2]

A. Motivation and incentives

The learner must feel an urge (desire, drive, need, set, tension) to learn certain things if there is to be much learning. Within certain limits the more intense the motivation the greater will be the learning. Subprinciples are effectiveness of goals, knowledge of progress, praise and reproof, suggestion, realism and practicability, anticipation of early use, examination set, and challenge.

B. Self activity

The individual learns only by his own activity (mental and/or physical). What he learns are the responses he makes

---

[2] See Smith, Kinsley R. and Van Ormer, E. B. Learning Theories and Instructional Film Research, 1949.

and organizes. Within certain limits, the more active the mental or physical learning behavior, the greater will be the learning. Self activity can be divided into (a) mental practice of a process which includes verbalizing the task, visualizing the task, and imaging the feel of the task; (b) raising and answering questions in presentation; and (c) learner propagandist.

C. Seeing and organizing relationships

The learner ordinarily has some tendency to see and organize patterns or relationships in the material or activities which he is learning. But this tendency cannot be trusted to form the desired relationship unaided. This organizing process must be directed and facilitated for effective learning, and includes meaningfulness, patterning and identifiability.

D. The principle of effect (reinforcement of responses)

In much learning a selective process occurs in which the individual tends to acquire and repeat those actions which have one or more of the following results: (a) led to success in that situation, (b) tended to satisfy the motivating conditions, and (c) been perceived as means to desired ends. It can be applied by checking by the learner, and demonstration of wrong methods.

E. Practice and/or repeated presentation

Mere practice or repeated presentation of material has very little, if any, strengthening effect upon learning. Repetition apparently merely affords the opportunity for

strengthening or weakening factors to affect the learning. The subprinciples are exercise under favorable conditions, over-learning, realistic practice, part-whole practice, spaced practice, minimum delay of practice, and review.

f. Generalization, application of transfer

This principle can be divided into generalization set and recognized similarity.

g. Characteristics of the learner

They include general mental ability (intelligence); educational level; previous knowledge or skill possessed in relation to specific material to be learned; specific aptitudes, e.g., mechanical, spatial, verbal, perceptual speed, kinesthetic sensitivity (muscle sense); facility for learning through the eye or the ear; attitudes and interests; past experience with various teaching techniques such as lectures, films, etc.

A simple explanation of the method of using audio-visual materials to aid learning follows in essence the analysis of the learning process by Miller (1957):

Drive (motivation) - the student must want something

Cue (stimulus) - he must notice something

Response (participation) - he must do something

Reward (reinforcement) - he must get something he wants [p.63].

Miller explained that each of these stages in learning can be made clearer, more meaningful, and more vivid by the proper use of instructional film.

Maynard (1971) suggests the Celluloid Curriculum, i.e., teaching with films which are basically not classroom oriented. He emphasizes that film can be an independent part of the curriculum. With exceptionally well selected summaries of commercial (or entertainment oriented) films he describes his own way of using feature films in his classroom.

An instructional film is of value only to the extent that it contributes to more effective learning and greater student comprehension. However, in the actual situation, films and teachers can only stimulate and guide the learning process, since learning is a voluntary experience that demands a willing and willful effort on the learner's side.

Only a few research studies have been done to examine the relationship of instructional film and learning theory. Yet, this is the field which needs significant results through proper experiments.

Some Theoretical Hypotheses on Film Research[3]

The necessity to develop guiding hypotheses for instructional film research has been recognized, and Carpenter (1953) has outlined and presented eight theoretical hypotheses for the Instructional Film Research Program at the Pennsylvania State College.

Carpenter stated that the objective of the Instructional

---

[3] Based on the article "A Theoretical Orientation for Instructional Film Research," by Carpenter, C. F., in AV Communication Review, Vol. 1, 1953, pp. 38-52.

Film Research Program is to discover facts and principles for increasing the effectiveness of the instructional sound motion picture for rapid mass training. His assumptions were that effects are revealed in terms of changes in the behavior of subjects and an important requirement of film research is the controlled production of experimental film variables and versions for comparative test purposes.

The outlined hypotheses are:

Sign Similarity Hypothesis -- That films whose signals, signs, and symbols have high degrees of similarity (iconicity) to the objects and situations which they represent will be more effective for most instructional purposes than films whose signals, signs, and symbols have low degrees of "iconicity" (e.g., film representations of the performance of knot tying).

Releasor-Organizer Hypothesis -- That the signals, signs, and symbols of sound motion pictures function principally as releasors and organizers of meanings and responses in human subjects (e.g., The psychological concepts of accumulative experience, apperceptive mass, prior set, predisposition to respond and reintegrative learning all relate to and may be used to support this releasor-organizer generalization).

Channel Capacitance Hypothesis -- That there are definable limits to the amount of content which can be channelled through a sound motion picture, i.e., through the visual and auditory modalities of perception: and there are

limits to the capacities of individuals for reacting to, imprinting, and retaining the information or content (e.g., level or amount of verbalization (speech) in films relative to their instructional efficacy).

Perceptual Reinforcement Hypothesis -- That multi-sensory modalities of communication may be, under certain conditions, more effective for instructional purposes than single sensory modality communication (e.g., the relative contributions of pictorial and sound channels to learning from films).

Information-Dependability Hypothesis -- That information contained in sound motion pictures and perceived and learned by viewers varies widely in functional dependability, and that films with high degrees of informational dependability are most effective for instructional purposes (e.g., the relative effectiveness of black and white and color films; also this hypothesis relates to a basic and necessary attitude of viewers toward learning from films).

Personal Need Hypothesis -- That the effectiveness of the film will be importantly determined by the degree to which it activates personal needs in viewers for the information represented in the film (e.g., participation, anxiety, motivation, etc.).

Personal Involvement Hypothesis -- That, other things being equal, the instructional film which provides for the greatest degree of personal involvement in the visually

presented situations will be most effective (e.g., comparision of the effectiveness of a demonstration photographed from the learner's viewpoint vs. the observer's viewpoint; or the effect of religious films).

Learning Principles Hypothesis -- That the established principles of learning which have been developed by psychological and educational research have varying degrees of applicability in film mediated instruction, and that the application of the best of these principles will improve the effectiveness of film instruction (e.g., repetition and reinforcement; trial-error-and-success learning).

The above eight hypotheses may helpful in identifying variables related to teaching effectiveness of instructional films.

Film Literacy

Film literacy can be defined as special abilities involved in learning from films. These abilities may relate to sustained observation and interpretation of such film techniques as dissolves, close-ups, intercuts, etc.

The basic importance of a good film is the fact that while it cannot substitute for reality, it can isolate and intellectualize meanings not always evident in a first-hand experience (Wagner, 1954). According to Peters (1955) the film-image is a three dimensional "sign," i.e., a symbol of the reality perceived, a symbol of the inner self of the maker of the film, and a signal for the spectator. Moreover, film

does not communicate in the same way printed literature does. It communicates by images and sounds organized around elements of composition, rhythm, tempo, pace, lighting, color, music and symbols (Lacey, 1972). Unfortunately, we have little knowledge of how pictorial-verbal symbol systems function in the whole process of communication and learning. Peters (1955) has declared "Not only in a metaphorical but also in a proper sense the 'film medium' may be regarded as 'language' - in other words as a system of possibilities for representation, expression, and communication." Also he indicated that for the youthful and inexperienced spectators the understanding of film language presents a series of difficulties and only by teaching youth how to see, can they be taught at the same time how to benefit by what culture wishes to impart to them in a visual manner. Peters emphasized that the positive development of visual education stands or falls with this development of "seeing" [p.202].

Wagner (1954) has illustrated the problem of film language with an example of primitive adult audiences. Some African tribes could distinguish color films from black and white only by identifying the former as the pictures "where the sun was shining" [p.216].

Where does the concept "Film Literacy" come from? Shaw and Salomon (1968) reported the following:

> ....Individuals who differ in amount or kind of previous experience with film may differ also in the extent to which they profit from film learning [illegible]. Dohrer and Vernon (1949) called this "Film Literacy" and Boyd [illegible] Shaw (1967) suggested that this unique aptitude

> represents a kind of comprehension of the "grammer" of cinema [p.353].

Snow and Salomon considered this variable extremely important in multi-cultural educational settings where students of different social classes or cultures differ both in degree and kind of media literacy.

Total illiteracy in film, Forsdale and Forsdale (1970) determined, is the inability to recognize familiar objects, people, places, and action when they are shown directly and without contrivance on the screen. This sort of illiteracy corresponds to the unlettered illiterate who stares without comprehension at print on the page. It is not merely that he cannot get the message; he has no key to the code. Not only some primitive people have difficulty in identifying the content of both still and moving pictures, but also some modern people have similar problems (but for different reasons). Forsdale and Forsdale give the interesting example that Picasso, who was told by an American soldier that his paintings couldn't be understood because nothing on the canvas looked the way it really is, answered by pointing to the picture of the soldier's girl friend and saying, "She's an attractive girl, but isn't she awfully small?"

Forsdale and Forsdale (1970) classified the bottom rung of what they call the "Film Literacy Ladder" into five types:

<u>Level One</u> --- Total non-comprehension; the picture is as an arcane symbol as the printed word to the illiterate. The viewers do not recognize even, simple motion pictures of familiar objects.

Level Two -- The audience comprehends separate objects, but cannot assemble simple, familiar movements portrayed into meaningful actions. They identify parts of a picture but make no sense of a whole action portrayed in the film.

Level Three -- Confusion of picture with reality; they do not realize that the picture is not reality.

Level Four -- No understanding of the simplest film conventions, such as close-up, dissolves, wipes, etc.

Level Five -- Comprehension indifference to the unfamiliar; they have little or no understanding of, and certainly no interest in scenes, people, objects, which are not already familiar to them.

Film does not show the real thing; rather, it shows a limited, particularized, necessarily distorted view of it. It is a fallacy that no effort on the part of the viewer is required, since film is not an automatic medium which guarantees comprehension.

It is possible that a considerable range of film literacy would be found among people, even in developed countries, if we had more sensitive tools to detect it. The level of literacy in film could be increased if whatever instruction were to be given students in film comprehension, especially for young students with deprived backgrounds. As increasing use of the moving image becomes ubiquitous in education, the increasing complexity and variety of film technique will require our attention to this neglected problem -- film literacy.

The most profound reason for teaching about how to view films is to enable the students to engage himself with the medium at the richest and deepest level possible (Forsdale and Forsdale, 1970). Therefore, it is necessary to teach students how to "read" films.

IV

REVIEW OF SELECTED STUDIES

The review of these selected studies is divided into three parts: comparative research period, variable research period, and present status of research. The purpose is to deduce the trend of research on instructional film, and to present an overview of this research. The comparative period is summarized with the emphasis on the findings and trends in research.

Comparative Research Period (1918-1950)

Experimental study of the motion picture in classroom instruction began shortly after 1915 (Dale and others, 1937). Sumstine's report "A Comparative Study of Visual Instruction in the High School" was published in School and Society in 1918, and it was one of the earliest published research articles on film use in teaching. Hoban and Van Ormer have analyzed, summarized, and integrated research findings between 1918 and 1950 in their Instructional Film Research Report. It is summarized as follows:

A. Outcomes of film use in instruction

(a) People learn from films.

(b) The use of effective and appropriate film results in more learning in less time and better retention of what is learned.

(c) Films in combination with other instructional

materials are better than either alone.

(d) Instructional films stimulate other learning activities.

(e) Films facilitate thinking and problem-solving.

(f) Films are equivalent to a good instructor in communicating facts or demonstrating procedures.

B. Principles governing film influence

(a) Reinforcement: Films are of great influence when their content reinforces and extends previous knowledge, attitudes, and motivation; they are of least influence when previous knowledge is adequate, and when the film content is antagonistic or contrary to existing attitudes and motivation.

(b) Specificity: The influence of a motion picture is specific, not general.

(c) Relevance: The influence of a motion picture increases as the content of the film is directly relevant to the audience reaction it is intended to influence.

(d) Audience variability: Reactions to a motion picture vary with film literacy, abstract intelligence, formal education, age, sex, previous experience or predisposition of the audience.

(e) Picture primacy: The influence of the motion picture is primarily in the picture, secondarily in the accompanying language and/or music, and is relatively unaffected by "slickness" of production.

(f) Subjectivity: Response to a motion picture is most intense, efficient, and predictable when the pictorial content is subjective to the audience.

(g) Rate of development: Rate of development influences the impact of a motion picture on the audience.

(h) Instructional techniques: Instructional techniques built into the film, or applied by the instructor, substantially increase the instructional effectiveness of a film.

(i) Instructional leadership: The efficiency of learning performance of a group to whom a film or film strip is exhibited is influenced by the leadership of the instructor who uses the film or film strip as well as by the effectiveness of the film or film strip itself.

The general problem attacked during this period was the instructional function of the motion picture in relation to (1) other visual aids such as slides, demonstrations, maps and the like; and (2) the more traditional classroom procedures utilizing purely verbal instruction by means of textbooks, supplementary readings, and so on.

It was between 1920 and 1930 that motion pictures came to the attention of educators.[4] Until 1930, the motion pictures which were used for experimental purposes were not specially constructed nor were they sound pictures; up to 1930, research was limited to the use of silent films. After sound was added to the film, the comparative effectiveness of sound film and silent was a popular variable in research. Also, specially prepared 16mm motion pictures were created for the use of classroom learning.

During this period, the results of experiments show that better work was accomplished by students taught by film than by those in the control group where no film was used. Teachers were overwhelmingly convinced that the teaching film was highly effective, however, the film was viewed as an addition to the existing pedagogical devices of the school (Wood, 1929).

Toward the end of this period, fairly large numbers of subjects were used in experiments; for example, a two-year

---

[4] Among the pioneers in film experiments are Joseph J. Weber, F. Dean McClusky, and Frank N. Freeman. The Pennsylvania State University, University of Chicago, Yale University, Air Force, Navy, and Eastman Kodak Company were involved in Film Experiments.

program (1947-1949) was conducted by using approximately 15,000 subjects at Pennsylvania State University (Carpenter, 1949). Also Jaspen (1950), who designed seventeen different versions of film to teach assembly of the breech block of the 40mm antiaircraft gun, tested them on 2377 apprentice seamen in 1948.

As a result of anlyzing 74 experiments Levine (1937) concluded that if a correct methodology is used, the benefical results will transcend any initial expenditures or effort involved. He has recommended that research in the field of the educational film must be specific and minute, involving particular and definite elements of subject matter, methodology, film characteristics, educational levels, content, and the interrelation of each with the other and in combination. Lumsdaine (1953) also has criticized that (a) no control group and/or no prefilm measurement and (b) no statistical evaluation of reliability were found among the early research in this period. Hoban Jr. (1937) has indicated seven neglected factors of experimental procedure isolated in the sixty-one studies: (1) Typicalness of classroom procedures, (2) Comparability of methods of instruction, (3) Methods of measuring results of instruction, (4) Limitations of the control group technique, (5) Insufficient analysis of data, (6) Diversity of grade classification, and (7) Incomplete investigation of problems.

With some exceptions, instructional film research prior to 1950 can be generally characterized as comparative research. In other words, as Allen (1971) criticized, learning from some

unspecified film was compared with learning from some unspecified presentation by an instructor or other medium. This was the predominent type of film research for over 30 years.

Variable Research Period (1951-1965)

A. General Trend

Allen (1971) has described the early part of this period as a "transitional period, when some of the old values of research were being discarded and new approaches and problems were being investigated... It was a period when educational television was still a dream, the term programmed instruction was not even coined, and such exoteric instructional forms as simulation, games, and computer-assisted instruction were beyond comprehension."

The foundation of this period was formed after World War II, and the lead was taken by the military services. Film was regarded as the medium which possessed limitless possibilities for study (Wittich, 1953). However, the new medium of television has drawn away much attention and the emphasis in instructional media research switched dramatically from film to television. Therefore, the period from mid-1950 to mid-1960 is labeled by Allen as "the decade of educational television." Greenhill (1967) shows the same viewpoint. These researches were stimulated by a shortage of competent teachers and by the need to educate a rapidly growing population. A relatively small number of studies have been conducted with

comparision of learning from filmed courses, sometimes supplemented by a teacher, with direct instruction during this period.

In their study "Research in Instructional Television and Film," Reid and MacLennan (1967) summarized 333 studies between 1950 and 1965. Most of these studies dealt with specific variables which were thought to effect the teaching effectiveness of instructional films. Several kinds of variables were tested for their effects. For example, inserted questions in films, inserted titles, sound vs. no sound, black and white vs. color, motion picture vs. still picture, animation vs. live photography, attitude, various kinds of attention directing devices, vocabulary difficulty were examined.

In reviewing film and television research during this period, Greenhill (1967) observed two salient characteristics. The first was the number of the studies that had deficiencies in their experimental designs. The most common of these were the use of nonrandom groups and the confounding (uncontrolled mixing) of variables. Some studies provided no evidence of test reliability which makes interpretation of results very difficult. The second was the large number of nonsignificant differences that have been obtained, and even where statistically significant differences were found, there is an absence of differences of large magnitude (e.g., two to one or greater) between different methods of instruction. The reasons for the failure to find large and significant differences may include the following: (a) Measuring instruments

were not sensitive enough to detect differences which may have existed; (b) The use of predominantly verbal tests with visual media; (c) Many studies have dealt with comparisions of variables which tend to cancel each others effects; (d) Some experiments were concerned only with single variables which in many cases are not sufficiently potent to produce significant differences in learning; (e) The "law of compensatory effort" may be operating. This law asserts that student have certain levels of aspiration and that they strive for a particular grade. Therefore, many students will put less effort into a well-taught course and will work harder in other courses which are not being taught as well and where more effort is needed to achieve the desired grade; (f) Comparisions among presentations which simply involve different media are not likely to be fruitful.

Greenhill (1967) has suggested two approaches to find significant differences: (a) Use of additive design in which the experimenter begins with a basic treatment and then progressively adds variables, and (b) Comparision of the new combination of variables each time with the basic treatment. Variation on this type of approach is the use of the complex multi-variable design involving a considerable number of variables in different combinations.

B. Review of Variable Studies

VanderMeer (1950) conducted a study comparing groups of students in a ninth-grade biology course which were taught by (1) 44 sound films alone (each film was seen twice), (2) the

same film plus specially prepared study guides, and (3) standard lecture-demonstration-discussion methods by a classroom teacher. The results showed no significant differences in student performances on immediate tests or on delayed recall tests after 3 months. However, the "film only" group took about 20 percent less time than the other two treatment groups to complete the course. Hartman (1960) found that filmed lectures are useful in increasing the knowledge of physics in college freshmen. Significant gains were achieved with eleven lectures without outside preparation.

In his study, Allen (1955) reviewed research on the use of film and class preparation concluding that: (a) teacher introductions and class preparations for film showings result in significantly more factual material learned than merely showing the film without an introduction; (b) Teacher introductions to film showings are about equal in effectiveness to reviews after the showings in the teaching of factual information; (c) The prefilm announcement of a test to follow the showing results in increased factual learning over the condition in which no test is announced; and (d) Introduction has a motivating effect upon all parts of the film to follow, but a greater effect upon those parts especially covered.

Student participation was studied by Allen (1957). After reviewing verbalization of response, perceptual motor responses, notetaking, knowledge of results, and mental practice, he concluded that generally: (a) Learner participation during a film showing will result, under most conditions

of instruction, in greatly increased learning from the film; (b) The overt verbalization of responses by the learner during the film showing results in increased learning; and (c) The furnishing of "knowledge of results" of the learned overt response during a film showing also has a positive effect upon learning. He also emphasized that the techniques of participation appear to be important contributors to learning from instructional film.

Northrop (1952) studied the effects on learning of the prominance of an organizational outline in instructional films. As results he found that the addition of titles and commentary material will increase learning if the film is not inherently well organized. Addition of titles to a dramatic or narrative type of film did not seem to increase learning. The less intelligent members of the audience may be expected to profit more from the addition of outline material. A detailed outline was no more effective than one that stressed the salient points of the film.

More learning occured, VanderMeer and Cogswell (1952) concluded from their study that when the viewers were prepared for the film showing by being told exactly what they were to learn. They also concluded that complex skills can be taught by film alone.

Note-taking was an interesting variable for the researchers. Ash and Carlton (1953) found from their study of note-taking effects during film viewing that note-taking interfered with learning because films did not have pauses and

repetition is necessary for note-taking. Minter, Albert, and Power (1961) concluded that class discussion and note-taking is significant in learning; however, in this study the film was stopped periodically for students to take notes.

The relative effectiveness of color and black and white films in instruction has long been a concern of researchers. VanderMeer (1952) found in his study that the use of color in instructional film does not appear to be justified in terms of greater learning on the part of those who view the films. However, the contribution of color in film seems to be related more to the retention of learning than to the immediate acquisition of learning. Sex differences of preference in learning from color films are slight. Zuckerman (1954), Fullerton (1956), Hudson (1959), and Driscoll (1960) found similar results from their studies.

In 1953 and again in 1956, Carpenter and Greenhill reviewed total of 63 research reports and summarized the results. Among them items concerning the preparation of film for instruction are : (a) Specific content in film is required to meet specific instructional objectives. Films with broad superficial content aimed at a generalized audience are likely to be less effective than films with well specified content aimed at an audience of known characteristics; and (b) Films should be prepared for a specific audience. Therefore, production ... especially audience-tailored film production -- was of concern to the researchers.

Frequency of film showing is another variable. VanderMeer

and Cogswell (1952) concluded in their study that showing the film twice produced greater learning than a single showing. McTavish (1949) also reported that the second showing of a film on general science produced significant increases in test scores; increases produced by further showings were not significant. In a somewhat different case, Jaspen (1950) and Lumsdaine (1952) showed that repetition or practical demonstration within a film contributed to teaching effectiveness. Another result was added by a study with Navy trainees. Ash and Jaspen (1953) studied the effects of repetition along with several other variables using 1,13[illegible] trainees at Great Lakes Naval Training Center. They concluded that for the film having a slow rate of content development, significant contributions by repeating the film were found only for the second showing. The third showing of the slow film had little effect. With the fast-paced film three showings were necessary for a significant increase in learning and the second showing resulted in only slightly better performance.

Generally, it can be said that relevant information presented in films and perceived usefulness of the information are the factors which produced changes in attitudes. Tresemer (1960) conducted a study using 540 [illegible] students in Education, Psychology, Public Health, and [illegible] classes to determine opinion change for a film especially prepared for a given audience. He found that an [illegible] film produces in significant opinion changes.

In 1960, Kantor tested the hypothesis that inserted questions can significantly raise the teaching effectiveness of factual instructional film when such questions are inserted both visually and aurally. The study concluded that it seems to make no significant difference if questions are inserted before or after the content, or if no questions are used at all. Vuke (1962) indicated similar findings. He found in his study that the seventh grade students developed an understanding of basic scientific methodology equally well from a film which contained inserted questions for covert responses and from a similar film with no questions.

Robert and Parchert (1962) attempted to answer the question "How can we secure greater academic returns through use of motion pictures?" They found the use of work sheets (objective questions which set up more specific goals) make a significant difference. In summary, they listed that worksheets can: (a) produce increased learning; (b) impress on student's mind definite aims for the viewing, and help to give the film lesson its proper importance; (c) present a task that eliminates the time-conditioned idea that motion pictures are only for entertainment; (d) tangibly anchor certain information thus eliminating the usual film disadvantage of presentation of fleeting information; (e) helps to make the learning more nearly permanent since the worksheet gives both reading and writing experience in a concise form; and (f) when a student takes a worksheet home, he has the kind of specific facts before him that he often likes to discuss with his family.

The principles of learning fundamental programmed instruction has influenced the design of instructional film. Schrog and Holland (1965) demonstrated that an existing educational film can be converted into a teaching-machine program and thereby gain the advantages claim by programmed material. They claimed that when the concepts to be taught involve time and motion, actual or filmed demonstrations are potentially useful. However, more passive demonstration by the instructor or by film to a passive audience does not in itself establish the concept. Using teaching machine [illegible] Film-Max II with the answer mate, the printed version of the program was presented along with the film sequence to the students. In this program attention of the students is [illegible] as the frames advance only after frame questions have been answered, and the frames are so designed that they are [illegible] only after mastery of the frame's information. The results indicated that the program was highly effective. However, the number of subjects (16 for program group, 6 for film only group) was too small for valid conclusions. The authors also indicated that the results should not be taken as proof that "programmed instruction" is better than "educational film." It is not possible for a single program or a single film to serve as a representation of its class of media.

Gerlach and Vergis (1965) listed [illegible] for offering a self-instructional film course [illegible]: (a) [illegible] teaching machine movement and programmed textbook, and (b) the sudden surge of interest in cartridged [illegible] film [illegible] the several

types of projectors designed for such films. With the description of the status of Arizona State University's 8mm workshop, they claim that the low-cost film and projectors appear to be highly amenable to the requirement of self-instruction.

To study to what extent teaching films can be improved by systematically modifying their structure and elements based on results of tests, VanderMeer, Morrison, and Smith (1965) conducted an experiment showing two films and then their revised forms. Performance on the second revised version was significantly superior to the original version. The types of revisions that "paid off" included the following: introductions, summaries, and outlines; improving the visibility of that which is intended to be seen; the concept of size; attention-directing devices and labels; use of graphics; showing in the video what the audio refers to; changes in structure in commentary; verbal poverty or scarcity; direct statement in commentary versus student influence; and precision phrasing.

As Allen (1959) indicated, motion picture film research, totaling close to 3,000 reported studies at that time, have charged direction to the more rewarding study of the characteristics within instructional films, variations in their use, and their relationships to learners that can make them more effective teaching and/or learning materials.

Present Status of Research (1966-1974)

A General Review

Culkin (1970) has described this recent period as "...the age of the moving image. Photography got it started. Film got it moving. Television got it into the living room." A general trend is trying to understand more precisely the place of media in the instructional process. The structure and sequencing of instruction with particular emphasis on the hierarchical characteristics of the content, the use of advanced organizers, the degree of control exercised over the presentation of content, and other factors relating to the learner action are responsible for leading to increased learning (Allen, 1971). The studies of the above variables are still in their infancy, but insightful reviews of the progress to date have been made by Briggs (1968), Gagné and Rohwer (1969) and Frase (1970).

Other variables popular for present research are three-way interaction of stimulus, task and learner; structure and sequencing of instruction with instructional media; individualization of instruction; identification and preparation of instructional objectives.

Cowger (1968) concluded from his research that when film choices are offered, interested students retain more from their viewing, and this increased retention seems to hold across differences in I.Q. When the element of choice is absent, it appears that retention is lower and there is a corresponding increase in positive correlation with I.Q. scores.

In their study, Allen and Weintraub (1968) found that under most conditions the motion picture is the most effective medium for presenting information to be learned cognitively.

Allen, Weintraub, and Cooney (1969) studied the effects of a film on Oceanography using 477 sixth graders. Independent variables were response mode, feedback mode, and review mode. They reported: (a) The basic conventional film resulted in as great a learning gain as any of the other experimental treatments; (b) There was a tendency for the feedback of the knowledge of correctness of response to aid learning; (c) neither overt nor covert responses were found to be superior under any of the feedback conditions; (d) There were no significant differences in learning among any of the review conditions; and (e) Subjects with lower vocabulary achievement interacted more variably with the different experimental variables than did those with higher vocabulary achievement.

Moakley (1968) used a multiple choice test to measure effects of periodic variations in an instructional film's normal loudness level for relevant and irrelevant film sequences. An analysis of variance for the four experimental groups suggested that higher mean performance was a result of decreases in loudness rather than increases, regardless of relevancy of the material. Another analysis suggested, however, that decreases in loudness for irrelevant material resulted in higher performance than decreases for relevant material. For the three control groups whose film sequences were consistently relevant, more learning resulted from louder levels both

above and below normal than from a normal level. And high performance levels were positively related to high intelligence levels.

Modern cinematographic techniques are far superior to those produced a decade or two ago, allowing for greater control over the viewer's behavior. Gerlach and others (1[illegible]) said that the amount of desired learning required from an instructional film or other instructional media is largely a function of the control it exerts over the learner's behavior. They suggested two kinds of control. External control is the control that the instructor maintains over the learner's behavior (maintain a quiet room, question or test on topic, etc.). Internal control refers to control over learner responses by stimuli contained in the film itself. These responses, of course, are the behavior related to attainment of the instructional objectives of the film. They claimed when using the programmed film, with its high degree of internal control, predictions concerning learning outcomes can be made at a relatively high level of confidence. It was also explained that such programmed pictures are response oriented, while the traditional film is stimulus oriented.

In their study on individual differences and instructional film repetitions, Snow, Siebert, and Parker (1968) found that the changes in correlational patterns across repetitions of the same film were not apparent, though some differences in pattern were noted for these films. They indicated the methodological problems involved in research on

individual differences in learning and needed further analyses.

Wade (1971) who examined instructional video tape/film accountability suggested a systematic, objective approach to assessing the effectiveness of a video tape/film: (a) Define the target audience for the video tape/film in terms of grade level, ability range, relevant socio-economic characteristics and previous subject area experience; (b) Specify precisely the instructional objectives for the video tape/film; (c) Prepare the criterion test; (d) View the film; analyze, separately, the content of the sound and picture tracks; and list the discrete facts, opinions and skills that each track presents; and (e) Determine if preliminary analysis of video tape/film content leads to the conclusion that it contains the information to answer all or most of the criterion tests (formative and summative evaluation procedures).

He also suggested eleven program principles for producing instructional video tape/film as follows:

(a) Define instructional video tape/film.

(b) Specify with precision the instructional objectives of the program.

(c) Prepare the criterion test.

(d) Prepare a list of learner prerequisites, which will provide the programmer with a reference inventory of assumptions concerning student's knowledge of the subject prior to the instruction under plan.

(e) Prepare the outline of program content.

(f) Prepare a preliminary content sequence.

(g) Select the programming strategy to be followed.

(h) Write a first draft.

(i) Test the first draft.

(j) Prepare the second draft.

(k) Prepare the program in final form.

Above principles can be used in preparing instructional film lessons.

A self-instructional film should be learner-oriented rather than content-oriented (Gerlach and others, 1969). Its objectives should be stated in terms of observable, specific behavior. The distinguishing characteristic of such terms is that they are subjected to few interpretations. Objectives should be to identify, name, order, describe, and construct. They also pointed out that a self-instructional film must include two considerations: behavior and subject matter. Finally, when the learning task is concerned with simple learning such as paired-associate learning, it is more appropriate not to use a film at all, but rather to use less elaborate and expensive materials...flashcards, for example.

In their book Teaching with Films, Fear and Hobbins (1947) pointed out the need of preparation of the teacher. They claimed that teaching films are 10 to 100 times cheaper. Next to textbooks, they have been rinsed and abused more than any other media. Some teachers have used films as a device for entertaining and instructing the student without requiring any lesson preparation on the part of the teacher, and the status of teaching films as instructional aids has suffered thereby [p.92].

The hypothesis that providing learners with a list of the behavioral objectives for a set of instructional materials will increase their learning from the material was tested by a study conducted by Smith, Roberts, and Taylor (1973). Sixty-four university students enrolled in an audio-visual education course were divided into four groups. Each group was presented with all the objectives, a partial list of objectives, or no objectives at all prior to the viewing of the film. After seeing the film the groups were tested. The results unequivocally demonstrated the facilitating role of pre-instructional presentation of objectives on learner attainment of the objectives. They explained this phenomenon by concluding that the presentation of objectives enabled the learner to focus his attention on relevant material.

E. 8mm Film

Recently Norelco (Philips) introduced a Super 8 projector which combines the features of film strip projector and the motion picture projector. It is a desk top unit with a small rear projection on screen designed to be viewed by one or two persons (Armsey and Dahl, 1973). Newly developed devices and 8mm films have brought individualization into instructional film viewing.

Davis (1965) said that the development of simple and comparatively inexpensive film projecting facilities can result in greater use of films, saving of teaching time in the classroom, and more flexibility in the production of instructional motion pictures. Recently developed easy-to-load cartridges

containing 8mm film loops provide excellent opportunities for establishing self-instructional situations, especially for teaching laboratory, language, and reading skills.

"Why 8mm ?" Carlach (1970) asks. Why are they called the new learning tool? He concludes that their accessibility, economy and practicality have brought them to this position. Since 1963, there has been a significant development of the hardware. Today there is an even wider variety of hardware available in the 8mm field.

The development in 8mm film has made film accessible to a degree never previously possible. Because of comparatively low cost and ease of operation, libraries of 8mm film can be established in each school, or even in individual classrooms. The 8mm film is also an important medium for increasing instructional effectiveness. It can easily be repeated as desired. The silent 8mm film can be used by the teacher to raise questions to elicit responses from the students. These characteristics carry with them the implication that 8mm films can be used for individualized instruction and for small group work.

The magnetic sound track offers another unique possibility for heightening instructional effectiveness. Since sound can be played back on a tape recorder, or erased and replayed whenever desired, the sound on a magnetic sound track can be used, reused, erased, or re-recorded.

Peck (1969) assembled the use of 8mm film from teaching. She considers 8mm film as a good medium for a small group or

individuals. She said 8mm films are ideal for special projects in extending skills, especially in social studies, science, and even mathematics. They can also be used in the disciplines to introduce units, introduce and reinforce concepts, and review content.

In summary, films in 8mm format are practical, accessible, and effective aids for the classroom teachers as well as for the course designers. It is possible to design entire courses with audience-tailored 8mm films.

V

DISCUSSION

As early as 1939, Wise described instructional film as "an instructional tool of tremendous power in the accumulation of knowledge and ideas and in the development of attitudes and appreciations. Because of its peculiar nature, that is, the unique quality of motion which it possesses, it contributes something to learning which is otherwise unattainable [p.169]." Fern and Robbins (1947) also indicated that it is very important that all schools take advantage of new teaching aids and techniques for instruction because the tempo of learning can be accelerated by instruction with films. For a half century much research has been conducted and film has been considered to be an effective teaching tool, offering several advantages. Yet, teachers still utilize the lecture method of teaching for most of their instruction and regular use of films in the classroom is far from a universal practice. Like other kinds of media, instructional film is not a panacea for all the ills in the classroom. But why do many teachers avoid this valuable teaching tool? Parker (1970) pointed out several answers to the above question as follows: (a) available films seldom offer the opportunity to effect certain educational objectives. In most instances film is used in isolation and not as an integral element of an instructional system; (b) existing

projection equipment is often unreliable and too complicated to operate. Constant classroom use demands a kind of service that is not being provided; and (c) Film format, film packaging formats and the necessary film projection hardware are too various. Lack of money, scheduling problems, and teacher's lack of training in use of audio-visual media are other reasons. Wilson (1968) described teachers' responses when they are not well informed about the newer media in education. When they do not understand, teachers become insecure and hesitant in using new materials and machines and accepting new ideas. Their immediate response can be: "Look, for ten years I have taught successfully. Just why should I use a film loop now?" Or in a rather roundabout form, "I'd like to use films, but I don't have time. It's all I can do to keep up with my regular work."

There is another kind of problem, too. Students might consider instructional film as an entertainment and do not give it as much attention and effort as they do for regular lectures. They should be told what to watch, what is the main point, etc.

The above problems can be divided into financial problems, mechanical problems, and instructional problems. In this paper only the instructional aspect will be discussed.

It was proposed by Salomon and Snow (1968) that in future research, (a) One should expect interaction effects between particular media attributes, learner traits, and learning objectives, rather than main effects due to media attributes alone; and (b) The media attributes under

investigation should be explicated in terms of those which lend themselves to psychological research. Concerning the nature of human aptitude and its relevance for instructional research and instructional practice, with particular reference to film and television, they pointed out as the simplest, most extreme argument in their discussion that almost all of the research evidence accumulated to date applies to some generalized "average students," and thus to no one! The point of the argument is not directed at the operation of averaging, but rather against the use of undifferentiated averages as the final arbiters of instructional practice. They emphasized that the problem is rooted in the design of experiment. Another point they made is:

> ....Upon entering instruction, an individual may be characterized in terms of an aptitude pattern which reflects the prior history and development of that individual. The term "aptitude" refers to any individual difference variable which functions selectively with respect to learning, that is, which appears to facilitate learning in some students and some instructional treatments while limiting or interfering with learning in other students and other instructional treatments. The term does not mean "general mental ability [p.347-348].

This suggests that there has not been enough consideration of the learner's characteristics. Thus, instructional film use can be evaluated in terms of learner characteristics and teacher preferences, but often is not.

Previous review of research indicates that most of the research can be divided into two categories. One is an attempt to find better ways of film production to increase its effectiveness in learning, while the other is to study the

effectiveness of already existing films. These studies have generated several recommendations and suggestions to improving production and use of instructional films.

A recent attempt of the first category is using the principle of programmed instruction to produce instructional films. Although little research has been conducted on this, the rationale for this attempt appears to be sound. Wagner (1964) predicted that "Films of tomorrow will be deliberately designed to stimulate thinking, to change behavior, and to bring about that sense of participation and sharing which characterizes successful communication and effective learning. Teaching films will, accordingly, be more than an accumulation of facts. They will be provocative and challenging. They will be more 'forked-road' situations, and more use of the open ending [p.2161]. In a sense, these are some of the characteristics of the programmed instruction. When using programmed film, with its high degree of internal control, predictions concerning learning outcomes can be made at a relatively high level of confidence. Programmed and traditional films differ also with respect to the emphasis on stimuli and responses. The programmed film is response oriented, while the traditional film is stimulus oriented.

However, Morgan (1973) pointed out that programmed instruction has several serious limitations as follows: (a) It is costly and difficult to develop and use; (b) If used to any degree it tends to bore learners; (c) It often threatens the teacher; and (d) It is disruptive if used in a conventional

classroom [p.28]. To a lesser degree these same difficulties may also apply to programmed film. If the above obstacles can be overcome, programmed film production for classroom learning, especially for self-paced use, is a promising field.

The Effective Use of Existing Instructional Films

What changes might be made in the use of the instructional film to increase its effectiveness? Various studies indicated increased efficiency for instructional film when it is properly used by the classroom teacher. But what is the proper way of using it? It is common sense that to use film to its full advantage, great care must be taken in the preparation and presentation; yet, no one has described and demonstrated the best way of using it. Considering the wide range of learning tasks and conditions there may not be one "best way."

It is suggested from research studies that purposeful use, organizational outlines, introduction, summary, pretesting, postiesting with the knowledge of results, introducing the film and stating the purpose and importance of the showing, use of study guides, etc. are good teaching techniques in film use. However, preparing the above supplementary materials would take much teacher's time and effort. It also requires that the teacher knows the film content and thinks through, in advance, the best approach to it. Wagner (1952) complained that too many teachers expect a film to do much more than any film is capable of doing, and reject many pictures for sometimes

minor deficiencies which they, themselves, could easily correct or even turn to good account [p.276]. But the fact is that teachers often don't have time.

Seeing is learning, Liotta (1972) explained, and that's especially true for a generation of students that grew up on television. There are learning concepts that most students can grasp best by seeing. In many of these cases, the student himself is the only one who can properly determine the ideal pace of learning. From his study, Liotta stated that besides saving valuable teaching time by eliminating repetitive instruction, film can also reach students who are not necessarily oriented toward either textbooks or lecture learning. He indicated that individualized instructional film (or self-paced instruction) should be a universal practice and teachers must become managers of the learning experience in the fullest possible meaning of that term.

By applying an individualized instructional film system, or by a newer form of independent study, teachers would have more free time to prepare supplementary materials for the lessons while students can proceed on their own pace. Is it possible with existing hardware? Gerlach and Fry (1963) found a way of using technicolor 8(0 projector for self-instructional films. With a simple modification, the projector can be handled, according to individual learning rates, by stopping and rewinding forward the film as desired. The film viewing schedule would allow students to have independent repetitive viewing depending on their needs.

Several changes in education are occuring now: Changes in curriculum content and general teaching method; changes in school design; new emphasis on methods and materials for teaching the disadvantaged; provision of educational centers separate from the conventional school; transformation of the school library into an instructional materials center, and many more. In the future, all the instructional films may stored in the library and the function of the library could become one of managing all the school's learning materials. Heinich (1970) suggested two types of teacher for a better learning situation in his model -- media teacher and classroom teacher. Ideally it is the best form; however, the actualization of this idea has the least possibility of implementation in recent future.

From the above discussion there seems to be a need for a model which would demonstrate the simplest way and most effective way of using instructional film. A possible model is depicted in figure 1.

Each step of the model will be explained briefly.

Unit Lesson Objectives.

Stating behavioral objectives should be a common step in any instructional program. Deterline (1966), Engman (1966), and Mager (1962) have indicated the benefits of behavioral objectives. Gagné (1970) also said that an important reason for specifying objectives is so the achievement or nonachievement of the terminal behavior which is aimed for can be known to the instructional designer. This permits proper planning

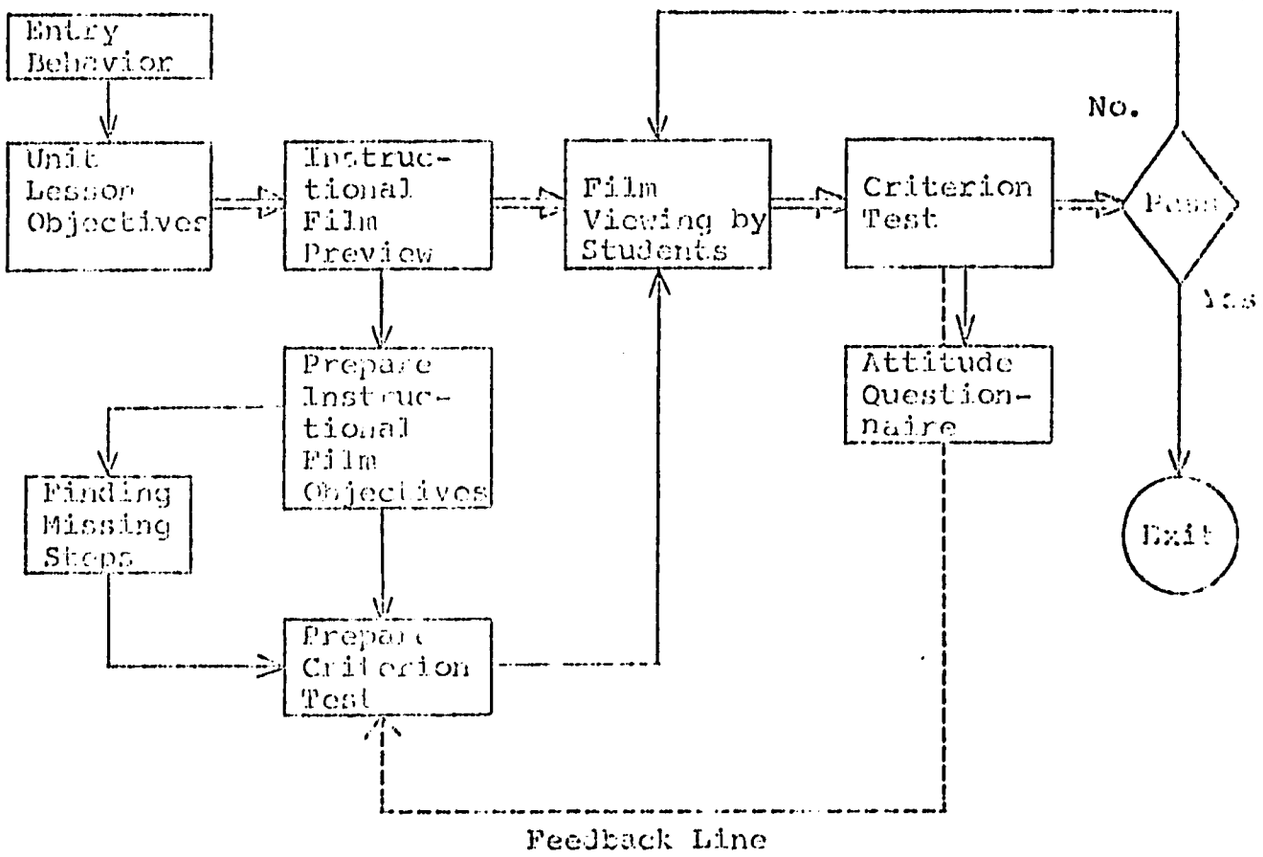

Figure 1

Model for Instructional Film Use

of sequencing of the instruction. The specification of instructional objectives in terms of human performance is necessary to meet the requirements of measurement.

In this model, unit lesson objectives and entry behavior are considered as given before selecting the instructional film. The teacher or instructional designer chooses the film according to the unit lesson objectives. Other criteria for film selection will not be considered here.

Instructional Film Preview

Organizational outline, summary, introduction, tests, or other techniques work to maximum advantage when the teacher has previewed the film in question. This procedure is rarely possible with the present demands on the teacher.

This step also allows the teacher to prepare the behavioral objectives for the instructional film.

Prepare Instructional Film Objectives

We cannot expect that the content of the instructional film will exactly correspond to the objectives of the unit. It is desirable to analyze the behavioral objectives for the film. Leostma (1954) emphasized that in order to secure reasonably uniform perception of the significant stimulus, the teacher must assist the students in identifying and structuring the significant stimulus. If the students know what to look for, they are more likely to find it.

Finding Missing Step

This step of model is arbitrarily named as "Finding Missing Step." The function of this step is to find what

supplementary instruction is needed to fulfill the stated objectives. Advanced organizer, outline, summary, guide-book, a list of difficult words, a list of general principles, a series of events, auxiliary materials, or a series of question can be prepared for students. Principle of programmed instruction and systems approach can be used in making decision. Kenny (1949) and Hotchkiss (1937) identified the need of this step for better use of instructional films.

Prepare Criterion-referenced Test

Announcement of a test to follow the film viewing may produce some anxiety on the part of the learner and also it may lead to increased motivation. By preparing criterion-referenced tests based on objectives it is possible to evaluate the learning from the instructional film.

Field (1971) showed in his study that tests can be used to improve effectiveness of classroom films. He raised the question that "If providing reliable and valid questions is essential to the achievement of specific educational objectives (and sales) by college textbook publishers, why aren't films accompanied by a validated objective examination? [p.262]." He proposed that an objective type examination should be provided by subject matter specialists.

Film Viewing by the student

Film viewing by the learner can be individualized from and/or classroom learning form in this model. Film should be viewed by the students, not just shown.
Students should be active, not passive. Since the learning

is voluntary experience that demands a willing and willed effort on the learner's side, students should exercise initiative in learning from instructional films.

Scheduling and administration should be considered in advance.

Criterion-referenced test

The evaluation of instructional film is to examine the achievement of its purpose. And the purpose of instructional film is instruction. It must teach!

Dwyer (1972) stated that each medium should be evaluated in terms of the learning objectives for which it is best designed. He indicated that comparisons of different media in relation to one type of learning objective or where specific objectives are not identified and tested produce results which are uninterpretable.

Ideally the criterion-referenced test should be provided by the producers of the film. However, for the time being teachers should make criterion-referenced tests for their students. Previously stated behavioral objectives will help teachers to prepare appropriate tests.

Attitude Questionnaire

Wagner (1967) stated that in any case, the reaction of the audience is the final determining factor in the meaning of the film. The purpose of this questionnaire is to assess the attitude of students both concerning the film and the way of using it. Feedback data for evaluation of the above test will reflect and also effect the revision of instruction.

Decision Making Step

When the student successfully pass the criterion-referenced test, then he can proceed from the filmed lesson to the next instruction. When he fails, repetitive viewing will be provided. More than two failures will alert the teacher that a problem exists and a discussion between the student and teacher will be held. To allow a wide choice on the part of the student, and to hold the student until he has reached the desired proficiency level, as suggested by Morgan and Bushnell (1967), the mastery learning principle will be used.

Cartridge-loading 8mm film projectors can be used for self-study and retraining of adults, especially in technical and professional fields. As Dwyer (1972) expressed, the effectiveness of visualized instruction is dependent upon the type of visuals used, the method of cuing students to the essential learning cues, relevant student characteristics, the visualized instruction, and the type of educational objectives to be achieved. With these factors in mind the implications of the previously described model should be tested and evaluated in actual learning situation. The model can be used for individualized instruction and/or for regular classroom situation. For regular classroom use the film viewing may need to be scheduled at least twice or more.

The model should be useful for making [illegible] instructional films more effective in student's acquisition of desired

learning outcomes.

A rather broad view of instructional film use was indicated by Lacey (1972) as follows:

> ....Particularly, a film educator should teach children, rather than any particular subject matter or even the qualities of the medium itself. More precisely, a film educator should help children learn how to learn, how to respond sensitively and effectively to others, how to clarify their sense of who they are, and how to develop capacities to choose freely from a variety of alternatives-all in relation and response to the screen. A film educator should foster these aims rather than the acquisition of particular skills or knowledge, valuable as such tools may be [p.2].

What is the best method of instruction? Greenhill (1967) has answered that "one that provides students with a wide variety of learning situations, which will develop the varied learning skills that they will need for continuing their education throughout their life-time." Instructional film can provide such a wide variety in a relatively [illegible].

VI

RECOMMENDATIONS

An instructional film is of value only to the extent that it contributes to more effective learning by the students. Previous review of research indicated that instructional film is a valuable teaching tool when properly used. However, there is nothing in instructional film presentations that guarantees better learning. If a better learning situation is to be provided, it is not enough simply to make and show an instructional film.

If the instructional film is to be more effective in the learning situation, following recommendations should be followed:

1. The effectiveness of instructional film is dependent upon the characteristics of media and audience, the method of production, and the methods of presentation. Therefore, future studies should be conducted with the exploration of interaction effects between particular film attributes, learner characteristics, and learning objectives. Also, attempts to use the distinctive potential of instructional film would result in more systematic findings with significant differences.
2. Evaluation tools for instructional films should be

developed. Student's performance on the given instructional objectives, attitudes, opinion, etc. should be evaluated.

3. More studies on self-instructional films are recommended. The high cost of film can best be justified when the film is used for essential instruction rather than as an aid. A large area for future development and experiment is the filmed course for home study using the recently introduced cartridge-loading 8mm film projectors. Such courses may prove to be useful for retraining of adults, drop-outs, and military personnel especially in technical and professional fields.

4. In-service teacher training programs could help teachers learn how to teach with films. Workshops on the use of projectors should be held or guide booklets should be provided.

5. Instructional film use should be planned when the course is planned so that films can be scheduled well in advance. Such planning will also insure the necessary time for previewing films prior to using them in instruction. It would be ideal if each school had a library of instructional films.

6. Films should be viewed before showing, not just shown. Students should be carefully prepared for viewing each instructional film. [illegible], each period.

The fallacy that films are primarily for entertainment should be corrected. Films and teachers can only stimulate and guide the learning process, since learning is a voluntary experience that demands a willing and willful effort on the learner's side.

7. The purpose for viewing the film should be clearly understood by the students. Teacher can help students by providing instructional objectives, guidebooks, summaries, or a list of questions about the film before it is shown.

8. Subject-matter specialists and film production experts should work together to produce better quality instructional films. Use of the principles of programmed instruction should help in producing more successful instructional films.

9. Any instructional film should be tested and evaluated in actual learning situation.

BIBLIOGRAPHY

Allen, W. H. "A Course of Study and Bibliography for Instruction in Educational Media Research and Theory," U.S. Department of Health, Education, and Welfare, 1969, ERIC: ED 031 950.

Allen, W. H. "Audio-Visual Communication," in Encyclopedia of Educational Research, Harris, C. W. (ed.), Third Edition, The MacMillan Company, New York, 1960.

Allen, W. H. "Instructional Media Research: Past, Present, and Future," AV Communication Review, 19, (1971), pp. 5-18.

Allen, W. H. "Research on Film Use: Class Preparation," AV Communication Review, 3, (1955), pp. 183-195.

Allen, W. H. "Research on Film Use: Class Preparation," AV Communication Review, 5, (1957), pp. 423-450.

Allen, W. H. "Research on New Educational Media: Summary and Problems," AV Communication Review, 7, (1959), pp. 83-96.

Allen, W. H., and Weintraub, R. "The Motion Variables in Film Presentations. Final Report," University of Southern California, 1968.

Allen, W. H., Weintraub, R., and Cooney, S. M. "Learner Response, Feedback, and Review in Film Presentation. Final Report," University of Southern California, 1968.

Armsey, J. W., and Dahl, N. C. An Inquiry into the Uses of Instructional Technology, A Ford Foundation Report, 1973. pp. 21-73.

Ash, P., and Carlton, B. J. "The Value of Note-taking During Film Learning," British Journal of Educational Psychology, 23, (1953), pp. 121-133.

Ash, P. and Jasper, H. "The Effects and Interactions of Rate of Development, Repetition, Participation, and Response Elimination on Learning from a Dual Projected Film," Tech. Rept. SDC 269-7-39. Port Washington, N.Y.: U.S. Naval Special Devices Center, 1953.

Briggs, L. J. "Sequencing of Instruction in Relation to Hierarchies of Competence," Pittsburgh, Pa.: American Institutes for Research, 1968.

Brown, J. W., Lewis, R. B., and Harcleroad, F. F. AV Instructional Media and Methods. McGraw-Hill, Inc. 19[illegible].

Carpenter, C. R. "A Theoretical Orientation for Instructional Film Research," AV Communication Review, 1, (1953), pp. 38-52.

Carpenter, C. R. (director) "General Summary of Trends of Research: The Instructional Film Research Program, 1947-1954," Instructional Film Research Program, Pennsylvania State University, 1955.

Carpenter, C. R., and Greenhill, L. P. "Instructional Film Research Reports, Volume II," Tech. Rept. No. SDC 269-7-61. The Instructional Film Research Program, Pennsylvania State University, U.S. Naval Training Device Center, New York, 1956.

Chu, G. C., and Schramm, W. Learning from Television: What the Research Says. Institute for Communication Research, Stanford University, Stanford, California, 1968.

Cowger, R. W. "Retention of Film Content Under Conditions of Self-selection and Individual Pacing," Unpublished Doctoral Dissertation, University of Oregon, 1968.

Culkin, J. M. "Motivate Them with Movies," Learning, 1, (1971), pp. 18-25.

Dale, E. Audiovisual Methods in Teaching. Third edition, The Dryden Press Inc., Hinsdale, Illinois, 1[illegible].

Dale, E. "How do Texts and Film Differ in Educational Tests?" School Management, 13, (1948), p. [illegible].

Davies, I. K. Competency Based Learning: Technology, Management, and Design. McGraw-Hill Book Co., N.Y., 1[illegible].

Davis, J. A. "Superimposition of Supplemental Information on Instructional Film," AV Communication Review, 13, (1965), pp. 275-283.

Davis, M. D. "Lectures Without the Lecturer," School Life, 16, (1931), p. 142.

Detrolino, W. A. "The Secret of Keep-Away Students," in Educational Technology, February, 1976.

Driscoll, J. P. "The Effects of Pictorial Relevance on Film Learning," Unpublished No. 318, Los Angeles: University of California, 1960.

Dubin, R., and Hedley, R. A. The Medium May Be Related to the Message: College Instruction by T.V. Eugene: University of Oregon Press, 1969.

Dwyer, F. M. "A Guide for Improving Visualized Instruction," Learning Services, Pennsylvania State College, 1972.

Elliotte, P. M. Film and Education. Philosophical Library, New York, 1948.

Engman, B. D. "Behavioral Objectives: Key to Planning," The Science Teacher, October, 1968.

Fern, G. H., and Robbins, E. Teaching With Films. Second edition, The Bruce Publishing Company, Milwaukee, 1977.

Fields, P. E. "Using Teaching Tests To Improve Effectiveness of Classroom Films," AV Communication Review, 19, (1971), pp. 261-284.

Flory, J. "Film for Learning, Some Observations on the Present, Past, and Future Role of the Instructional Motion Picture," in To Improve Learning, Tickton, S. G. (ed.), Vol. 1, R. R. Bowker Company, New York, 1970, pp. 211-229.

Forsdale, J. R., and Forsdale, L. "Film Literacy," AV Communication Review, 18, (1970), pp. 263-276.

Frase, L. T. "Boundary Conditions for Mathemagenic Behaviors," Review of Educational Research, 40, (1970), pp. 337-347.

Freeman, F. B., and Berg, E. L. Classroom Teacher's Guide to Audio-Visual Material. Chilton Book Company, 1963.

Fryer, J. F. "Film Utilization Cons," Audiovisual Instruction, October, 1973, p. 38.

Fullerton, E. J. "The Comparative Effect of Color and Black and White Guidance Film employed with and without 'anticipatory' remarks upon Acquisition and Retention of Factual Information," Dissertation Abstracts 16, 1956, 1413.

Gagné, R. M. The Conditions of Learning. Holt, Rehnert and Winston, Inc. Second edition, 1970.

Gagné, R. M., and Rohwer, W. D. Jr. "Instructional Psychology," Annual Review of Psychology, Vol. 20, Palo Alto, Calif. Annual Review, 1969.

Gerlach, V. S. "Why 8mm." The Instructor, January, 1970, p. [illegible].

Gerlach, V. S., and Fry, W. "A Modification of the Technicolor 800 projector for Self-Instructional Films," Audio-Visual Instruction, November, 1963, pp. 676-677.

Gerlach, V. S., Sullivan, H. J., Baker, R. L., and Schutz, R. E. "Programing the Instructional Film," AV Communication Review, 14, (1966), pp. 303-406.

Gerlach, V. S., Sullivan, H. J., Hersey, K. J., Baker, R. L., and Schutz, R. E. "Stating Objectives," Monograph No. 11. Arizona State University, Tempe., Classroom Learning Laboratory, USOE Project 5-0269, Contract No. OE 5-15-020. May, 1968, ERIC: ED 031 931.

Gerlach, V. S., and Vergis, J. P. "Self-Instructional Motion Pictures," AV Communication Review, 13, (1965), pp. 19[illegible]-20[illegible].

Greenhill, L. P. "Introduction," of the Research in Instructional Television and Film. Reid, K. J., and Lachmann, D. W. U.S. Department of Health, Education and Welfare, Wash., 1967.

Greenhill, L. P. "New Directions for Communication Research," AV Communication Review, 7, (1959), pp. 245-253.

Hau[illegible], M. R. "Filmed Lectures as Supplementary and Refresher Education," AV Communication Review, 8, (1960) pp. 21[illegible]-22[illegible]

Heinich, R. Technology and the Management of Instruction. Monograph No. 4, Association for Educational Communications and Technology, 1970.

Hoban, C. F. Jr. "Experimental Research in Instructional Films," in Motion Pictures in Education. Dale, E., Dunn, F. W., Hoban, C. F. Jr., and Schwartz, E. The H. W. Wilson Company. New York, 1937, pp. 304-306.

Hoban, C. F. Jr. Movies That Teach. The Dryden Press, Inc. New York, 1937.

Hoban, C. F., Hoban, C. F. Jr., and Nisonger, S. B. Visualizing the Curriculum, Fourth printing, The Dryden Press, New York, 1[illegible].

Hoban, C. F. Jr., and Van Ormer, E. B. Instructional Film Research 1918-1933. Arno Press & The New York Times, New York, Reprint Edition, 1970.

Hobrechter, G. "The Use of the Motion Picture as a Technique of Instruction," The Sch[illegible] Stu[illegible], 28, January, 1937. pp. [illegible]-1[illegible].

Hudson, W. "Color vs. Monochrome in a Demonstration Film used to administer Performance Tests for the Classification of African Workers," Journal of National Institute of Personnel Research, in Psychological Abstracts 33, [illegible].

Jaspen, N. "Effects on Training of Experimental Film Variables, Study 1: Verbalization, Rate of Development, and Verbalization errors, "How-it-works," Repetition; Rapid Mass Learning," Tech. Rept. SDC 269-7-17. Pennsylvania University, 1956, ERIC: ED 031 922.

Kantor, B. R. "Effectiveness of Inserted Questions in Instructional Films," AV Communication Review, 8, (1960), pp. 104-108.

Kenney, L. "Using Motion Pictures in Elementary Instruction," Audio-Visual Guide, 10, (October, 1947), pp. 9-11.

Kinder, J. S. "Audio-Visual Research: Where is Find It," AV Communication Review, 1, (1953), pp. [illegible].

Lacey, R. A. Seeing with Feeling: Film in the Classroom. W. B. Saunders Company, 1972.

Leesima, R. "Directed Observation in Film Utilization," AV Communication Review, 2, (1954), pp. [illegible].

Levine, H. "A Critique of the Educational Film," The Educational Screen, January, 1937, pp. 13-14.

Levonian, E. "Development of an Audience-Tailored Film," AV Communication Review, 8, (1960), pp. [illegible].

Liotta, C. "Seeing is Learning," College Management, 7, (1972), pp. 14-15.

Lumsdaine, A. A. "Audio-Visual Research in the U.S. Air Force," AV Communication Review, 1, (1953), pp. 26-30.

Lumsdaine, A. A. (ed.) "The Value of Using Multiple Techniques in Training Film Instruction," Wash. D. C.: Air Force Personnel Research Laboratories, Bolling Air Force Base, [illegible].

Maddison, J. "The Film and the University," in Film in Higher Education and Research. Groves, P. D. (ed.), Cambridge Press, London, 1966.

Mager, R. F. Preparing Instructional Objectives. Fearon Publishers, 1962.

Maynard, R. A. The Celluloid Curriculum: Using Movies in the Classroom. Hayden Book Company, Inc. New York, 1971.

McTavish, C. L. "Effect of Repetitive Film Showings on Learning," Tech. Rept. No. SDC 2[illegible]-7-12, The Instructional Film Research Program, Pennsylvania State College, Special Devices Center, November, 1948.

Miller, N. "Graphic Communication and the Crisis in Education," AV Communication Review, 5, (1957), p.63.

Hinton, P. C., Albert, F. A., and Powers, R. D. "Does Presentation Method Influence Film Learning?" AV Communication Review, 9, (1961), pp. 1[illegible]-2[illegible].

Noakley, F. X. "The Effects on Learning from a Motion Picture Film of Selected Changes in Sound Track Loudness Level, Final Report," Indiana University Audio-Visual Center, Bloomington, 1965.

Morgan, R. M. "Mastery Learning and Programmed Instruction for Developing Countries," Educational Technology, October, 1973, pp. 25-2[illegible].

Morgan, R. M., and Tuthnell, D. S. "Vocational Training and Curriculum Design," Educational Technology, 7(8), 1967, pp. 1-5.

Northrop, D. S. "Effects on Learning of the Prominence of Organizational Outlines in Instructional Films," Human Engineering Rept. SDC [illegible]-7-[illegible]. The Instructional Film Research Program, Pennsylvania State University, U.S. Naval Training Device Center, Port. Wash. L.I., New York, October, 1952.

Parker, B. S. "Is Film a Significant Instructional Resource?" Audiovisual Instruction, January, 1[illegible], pp. 47-48.

Peterson, R. D. "Applying Learning Theory and Instructional Film Principles to Films for Learning Presentation Skills," AV Communication Review, 20, (1972), pp. 281-295.

Peck, D. "The 8mm in Team Teaching," The Instructor, January, 1969, p. 125.

Peters, J. M. L. "The Necessity of Learning, How to See a Film," AV Communication Review, [illegible], (1957), pp. 197-206.

Pryluck, C., and Snow, R. E. "Toward a Psycholinguistics of Cinema," AV Communication Review, 21, (1967), pp. 54-75.

Reid, C. J., and Hagemann, D. L. "Research in Instructional Television and Film," [illegible] Division of Film, Education, and Welfare, U.S. Government Printing Office, Wash. 1967.

Roberts, A. B., and Parchert, G. "Do Worksheet Improve Film Utilization?" AV Communication Review, 10, (1962), pp. 106-109.

Salomon, G., and Snow, R. E. "The Specification of Film Attributes for Psychological and Educational Research Purposes," AV Communication Review, 16, (1968), pp. 225-244.

Schrag, P. G., and Holland, J. G. "Programing Motion Pictures: The Conversion of a PSSC Film into a Program," AV Communication Review, 13, (1965), pp. 418-422.

Smith, P. E., Roberts, K.C., and Taylor, C. L. "The Use of Inferred Objectives with Instructional Films," Arizona State University, Tempe, College of Education, Aerospace Medical Division (Air Force), Brooks AFB, Tex. April, 1973. ERIC: ED 072-643.

Smith, K. R., and Van Ormer E. B. "Learning Theories and Instructional Film Research," The Instructional Film Research Program, Pennsylvania State University, Office of Naval Research, Port Wash., New York, Special Device Center, June, 1949. ERIC: ED 044 923.

Snow, R. E., and Salomon, G. "Aptitudes and Instructional Media," AV Communication Review, 16, (1968), pp. 341-357.

Snow, R. E., Siebert, W. F., and Kerkman, R. F. "Individual Differences and Instructional Film Repetitions. I: Exploration of Aptitude-Learning Correlations," AudioVisual Center, Purdue University, 1968.

Stanford, B., and Mackeith, R. C. "The Use of the Film in Education," Scientific Film Association, Bulletin, 3:9, and 4:8. 1949.

Steen, L. E. "8mm Single-concept Production," The Instructor, January, 1969, p. 128.

Sumstine, D. R. "A Comparative Study of Visual Instruction in The High School," School and Society, 7, (1918), pp. 235-238.

VanderMeer A. W. "Relative Effectiveness of Color and Black and White in Instructional Films," Tech. Rept. No. SDC 269-7-28, The Instructional Film Research Program, Pennsylvania State University, Port Wash., L.I., New York: Special Devices Center, 1952.

VanderMeer, A. W., and Cogswell, J. "Instructional Effect of the Film "How To Operate the Army 16mm Sound Projector set," Tech. Rept. No. SDC 269-7-29, The Instructional Film Research Program, Pennsylvania State University, Special Device Center, Office of Naval Research, Port Wash., L.I., New York, September, 1952.

VanderMeer, A. W., Morrison, J., and Smith, P. "An Investigation of the Improvement of Educational Motion Pictures and a Derivation of Principles Relating to the Effectiveness of These Media," Pennsylvania State University, College of Education, April, 1965.

Vuke, G. J. "Effects of Inserted Questions in Films on Developing an Understanding of Controlled Experimentation," USOE Title VII Project No. 657, Bloomington, Ind.: Indiana University, February, 1962.

Wade, W. L. "How to Provide Instructional Video Tape/Film Accountability," National Association of Educational Broadcasters, Wash. D. C., 1971, ERIC: ED 056 498.

Wagner, R. W. "Design in the Educational Film," Educational Research Bulletin, 33, (1954), pp. 141-148.

Wagner, R. W. "The Creative Educational Film," AV Communication Review, 10, (1962), pp. 275-283.

Wagner, R. W. "The Teaching Film of Tomorrow," AV Communication Review, 2, (1954), pp. 216-219.

Wilson, R. W. "Newer Media Education: Problem Solver or Problem Maker?" The Clearing House, September, 1968, pp. 14-16.

Wise, H. A. Motion Pictures as an Aid in Teaching American History, Department of Education, Yale University Press, New Haven, 1939.

Wittich, W. A. "Needed Research in Audio-visual Methods," AV Communication Review, 1, (1953), pp. 99-105.

Wittich, W. A., and Schuller, C. F. Audio-Visual Materials, Second edition, Happer & Brothers, publishers, New York, 1957.

Wood, B. D. "What is the Potential Value of the Training Film?" The Nation's Schools, 3, (1929), pp. 54-60.

Wood, B. D., and Freeman, F. N. Motion Pictures in the Classroom, Cambridge, Mass.: Houghton Mifflin, 1929.

Zuckerman, J. V. "Predicting Film Learning by Pre-release Testing," AV Communication Review, 2, (1954), pp. 49-55.