AGENCY FOR INTERNATIONAL DEVELOPMENT
WASHINGTON, D. C. 20523

BIBLIOGRAPHIC INPUT SHEET

FOR AID USE ONLY
Batch 39

1. SUBJECT CLASSIFICATION	A. PRIMARY: TEMPORARY
	B. SECONDARY:

2. TITLE AND SUBTITLE
Refrigeration-cooling systems for rural communities in developing countries

3. AUTHOR(S)
(101) General Electric Co.

4. DOCUMENT DATE	5. NUMBER OF PAGES	6. ARC NUMBER
1962	44p.	ARC 621.56.G326

7. REFERENCE ORGANIZATION NAME AND ADDRESS
GE

8. SUPPLEMENTARY NOTES *(Sponsoring Organization, Publishers, Availability)*

9. ABSTRACT

(Engineering R & D)

10. CONTROL NUMBER PN-AAC-427	11. PRICE OF DOCUMENT
12. DESCRIPTORS	13. PROJECT NUMBER
	14. CONTRACT NUMBER Repas-1 Res.
	15. TYPE OF DOCUMENT

AID 590-1 (4-74)

621.56
G326

Report Rec.
PN-AAC-927

GENERAL ENGINEERING LABORATORY

REFRIGERATION-COOLING SYSTEMS FOR RURAL COMMUNITIES IN DEVELOPING COUNTRIES

A.I.D.
Reference Center
Room 1656 NS

DECEMBER 1962

GENERAL ELECTRIC

This report is one of a series prepared for the Agency for International Development, U.S. Department of State, under General Electric Contract - A.I.D. REPAS-1 on the Generation and Utilization of Power in Rural Areas of Developing Countries.

Prime Contractor	General Electric Company, New York, New York
Subcontractors	Center for International Studies Massachusetts Institute of Technology Cambridge, Massachusetts
	International Development Center Stanford Research Institute Menlo Park, California
	CARE, Inc. New York, New York

REFRIGERATION-COOLING SYSTEMS FOR RURAL COMMUNITIES IN DEVELOPING COUNTRIES

Submitted to

R.E.P.A.S., AGENCY FOR INTERNATIONAL DEVELOPMENT
U.S. DEPARTMENT OF STATE

by the

GENERAL ELECTRIC COMPANY

under

GENERAL ELECTRIC CONTRACT - AID REPAS-1

December 1962

CONTENTS

	Page
Introduction	1
Conclusions and Recommendations	2
Requirements	5
Alternate Concepts	11
Selected Systems	29
Development Opportunities	34
Equipment Manufacturers	37
References	40

INTRODUCTION

This report reviews and evaluates alternative refrigeration-cooling systems for application in the rural areas of newly developing countries. The principal objectives of the report are to identify available equipment suited to the needs of these countries and to delineate development opportunities for improved equipment systems.

Fresh food preservation is deemed the most fruitful application and the study has been restricted to that function. Community or village sized facilities are selected as the most economical means of accomplishing this function.[1]*

*Denotes number of reference listed at end of this report.

CONCLUSIONS AND RECOMMENDATIONS

A qualitative comparison of the refrigeration or cooling systems considered is presented in matrix form in Table 1. The systems listed are described and discussed in pp 11-28 of this report. Each system is rated with regard to its ability to meet functional requirements as well as other qualifications such as energy requirements, capital cost, simplicity, and opportunity for local manufacture. The scale for each qualification is a comparative one, with five indicating the best system with regard to a particular qualification and zero the poorest system.

The conclusions and recommendations of this study are summarized below.

Conclusions

1. The vapor compression cycle (the system used in the conventional household refrigerator) is the best system for immediate application for walk-in coolers or ice-making without further development. In most cases this system is electrically driven although other sources of shaft power can be used.

2. Thermoelectric, steam jet and air cycle systems are not worthy of further consideration at the present time.

3. There are several limited capability, environmental dependent cooling systems that because of their simplicity, low cost, and low energy requirements are attractive despite marginal performance characteristics. These systems include nocturnal cooling by radiation or forced convection, evaporative cooling, and direct cooling by means of cold water from local streams. All are restricted to the storage of commodities adapted to moderately high storage temperatures ($>$ 45 F) and to localities where favorable climatic conditions prevail.

4. Absorption cycle systems capable of operation at lower than conventional refrigerant vapor generator temperatures ($\sim$ 250 F) may be useful if low cost solar collectors are developed or waste heat is available from diesel-engine generators used as a community power source.

5. The energy economy of absorption systems is too low to encourage development of direct-fired systems using hydrocarbon fuels.

6. The following are available for immediate use in rural areas of developing nations:

   a. Walk-in coolers.
   b. Vapor compression refrigeration equipment for walk-in coolers.
   c. Ice makers using vapor compression refrigeration systems.

7. The principal opportunity for cost reduction of immediately available systems appears to be the local manufacture of insulated structures for walk-in coolers.

8. Transportation and short-term storage systems consisting of a community ice plant and small insulated containers and/or trailers refrigerated with ice or ice and salt appear attractive for the preservation of fresh fish, fruits, and vegetables.

Recommendations

1. Initial field pilot projects should use (a) commercially available walk-in coolers with vapor compression refrigeration systems or (b) commercially available ice makers or both depending upon local requirements.

2. Techniques for local construction of walk-in coolers using locally available materials should be developed.

3. Systems for transportation and short-term storage of fresh fish, fruits and vegetables based on community ice plants and insulated containers and/or trailers using ice or ice and salt for refrigeration should be evaluated and tried on a pilot plant basis if study results are favorable.

4. Contingent on the development of low cost solar collectors or the application of diesel generators to community power generation, absorption cycle systems capable of operation at low generator temperatures should be considered for development.

5. Local weather data and commodity storage requirements should be examined for the possible application of simple, low cost, low energy requirement systems (such as evaporative cooling, nocturnal cooling by forced convection or radiation, etc.) to the preservation of commodities having moderately high storage temperatures.

Table 1

COMPARISON OF REFRIGERATION/COOLING SYSTEMS
(Qualitative scale, higher numbers indicating more favorable characteristics)

	Functional Capability		Energy Requirements		Practicability			General Applicability
	Achieving Low Temp.	Environmental Independence	Quantity	Quality	Capital Cost	Operation & Service	Local Mfg.	
Vapor Compression	5	5	4	1	3	3	1	Yes
Absorption Cycles-Conventional	5	5	2	3	3	3	2	Limited#
Absorption-Solar	4	2	5	5	2	3	2	Maybe**
Absorption-Diesel Waste Heat	4	2##	5	5	3	3	2	Maybe**
Air Cycles	4	4	2	1	1	1	1	No
Thermoelectric	4	4	2	1	1	2	1	No
Steam Jet	3	4	1	2	4	2	2	No
Nocturnal-Radiation	1	0	5	5	5	5	5	Limited*
Nocturnal-Forced Convection	1	0	5	1	5	4	3	Limited*
Evaporative Cooling	1	0	5	1	5	4	3	Limited*
Cold Water from Streams	1 to 2	0	5	1 to 5	5	5	3 to 5	Limited*

Applicability limited primarily by quantity of energy required.
Considered to be environment dependent because presence of continuously operating diesel engine is required.
* Applicability limited to special conditions of climate and commodity storage requirements.
** Applicability depends upon successful development of adsorption systems capable of operation at low refrigerant vapor generator temperatures and other factors, such as the availability of low cost solar collectors.

REQUIREMENTS

The findings of the field survey teams in both India and Latin America indicated the most immediate need for refrigeration is in the preservation of foodstuffs produced in the community. Refrigeration could be used to reduce the high percentage of waste due to spoilage and would enable the foodstuffs to reach market in salable condition. Refrigerated storage facilities might also provide additional latitude for sales of crops under more favorable market conditions. An additional benefit would be improvement in the diet and health of the local population.

Three examples of commodity preservation and storage opportunities have been reported by the field survey teams. In each case, the commodities involved represent an important, if not the major, factor in the local economy. The first example is the storage of potatoes, a big crop in which severe losses due to spoilage are suffered in both India and western Latin America. A second example is the preservation of fresh tropical fruits such as papaya, pineapple, guava and bananas which are frequently allowed to rot in the fields of South America. A third opportunity is evident from the fact that a large percentage of the fish catch in coastal fishing villages in Colombia is inedible by the time it reaches the urban consumer.

Potatoes and Tropical Fruits*

Storage requirements for some of the commodities of interest are given in Table 2 as examples to illustrate the types of storage facilities likely to be useful. The conditions given are optimum for long storage; most of the commodities listed can tolerate lower temperatures for shorter periods without damage. However, bananas and potatoes are exceptions to the rule and temperature below those recommended should be avoided. The temperatures given in the table are actual commodity temperatures, not storage compartment air temperatures.

Note that the optimum storage temperatures for all the commodities listed in Table 2 fall in the range of 40-60 F. Many other commodities, such as green beans, cucumbers, eggplant, dried figs, limes, melons (except watermelon), fresh olives, squash, and ripe tomatoes also have optimum storage temperatures in the same range. On the other hand, there is another large group of commodities for which the optimum storage temperature is about 32 F, just a few degrees above the freezing points of the commodities involved. Examples of this group are apples, apricots, asparagus, beets, carrots, cauliflower, cherries, eggs, grapes, lettuce, peaches, spinach, strawberries and turnips.

*The information presented here has been gleaned from Reference 2. This reference also contains information regarding storage requirements of many other commodities as well as more detailed information on the commodities mentioned here.

Table 2

Commodity Storage Requirements

Commodity	Storage Temperature, F	Relative Humidity, %	Approx. Storage Life
Bananas, green	56	85-95	
Bananas, ripe	56	85-95	7-10 days
Potatoes, early crop	50-55	85-90	
Potatoes, late crop	40	85-90	5-8 months
Potatoes, late crop	50	85-90	2-4 months
Papayas, firm, ripe	45	85-90	2-3 weeks
Pineapples, mature green	50-60		
Pineapples, ripe	40-45		2-4 weeks

On the basis of the above, we can define in general terms the cold storage facility requirements of most immediate interest. This type of facility would be primarily for the storage of potatoes and/or tropical fruits and should be capable of maintaining commodity temperatures as low as 40 F. Also of interest is a variation of this type of facility that would have broad application to the storage of many other commodities; i.e., a facility designed for storage temperatures as low as 32 F.

Fish*

In general, the most successful and commonly used method of preserving the quality of fresh fish is by means of icing; i.e., packing of the fish in ice, preferably immediately after they are caught. Improper and inadequate icing is one of the major causes of quality loss. Sanitation is also important and is closely related to the means used for icing as will be seen from the following discussion.

The functions of ice are to lower and hold the temperature of the fish flesh to about 32 F, to melt and provide water to wash slime and bacteria from the fish, and to maintain aerobic conditions in the stored fish. The quantity of ice required depends on the species of fish, the ambient environment and the length of time the fish are to be stored. In fishing vessels a ratio of one pound of ice to two pounds of fish is usually satisfactory.

Because of the intimate contact between the fish and the ice, certain standards of ice quality must be maintained. The ice must be clean when used; chlorinated or potable water should be used in making it. Ice subcooled to 0 to -10 F prior to crushing and storage crushes easily, flows freely for easy handling and lasts longer than ice at temperatures only a few degrees below the melting point. In commercial practice irregular 1-2 inch diameter crushed ice chunks are generally used. Larger particles tend to bruise and injure fish.

The use of flake ice has increased in recent years. Flake ice has a smaller, more uniform particle size than crushed ice and is lower in production cost. It is usually supplied to the storage container at a lower temperature and although it has a higher melting rate than crushed ice, the difference is not enough to appreciably shorten storage periods. Flake ice holds fish at a lower temperature and thus maintains better quality. The principal objections to flake ice are that it melts too fast and fuses together in the boat hold. These difficulties have been minimized by the development of machines for chipping off subcooled ice and storage of the ice in refrigerated bins at 0 F.

*The information presented here has been gleaned from Reference 2 and the reader is referred to that publication for further detail.

Salt water ice made from a 3% solution of sodium chloride brine has been used to maintain a storage environment of about 30 F for the fish thereby providing faster cooling and lower temperatures. However, the lower latent heat of salt water ice and the greater difference between ambient and storage temperatures causes greater ice consumption. Another problem with salt water ice is the tendency of the salt to migrate to the center of the block during manufacture unless rapid freezing or a stabilizing dispersant are used. This problem does not exist with flake ice machines because freezing takes place rapidly in thin layers.

The storage of fish in chilled sea water mechanically refrigerated to 30 F has been used and holds promise for certain species. Handling is made easier, weight losses are reduced and crushing and bruising are eliminated. Further experience is required for definitive evaluation of this method.

The total maximum storage life for fresh fish varies from species to species. In general, salt water fish properly iced and stored in 35 F rooms will keep 10-15 days. Fresh water fish will have a storage life of only 7 days. The storage room temperature should not be below 35 F because ice on the fish must melt continually to wash away bacteria and slime. Air velocities should be kept low to prevent sublimation of the ice resulting in dehydration of the fish.

From the above it appears that the principal requirement for fish quality preservation is a source of clean, subcooled crushed or flake ice. In addition to ice making machinery some ice storage facility would also be required. The availability of ice plus suitable containers for handling iced fish should make possible the protection of the output of a fishing village in the boats, in storage, and in transportation to market.

Ice could also be used in the storage and/or transportation of other commodities and for some, such as beets, lettuce, and carrots, icing is the best method of refrigerating to avoid dehydration.

Energy Sources and Heat Sinks

Sources of energy that may be available to the local community for driving refrigeration equipment include electricity, waste heat, solar energy and hydrocarbon fuels. Although electricity is not always available, in many cases where it is available it is not used to economic advantage nor to the extent of installed generation and distribution capacity. In many of the communities of interest here, solar energy is available in abundance but economic means for collecting the energy in useful form have not as yet been developed. Low grade waste heat may in some cases be available from diesel engines. Hydrocarbon fuels such as diesel oil are frequently available; the principal limitation of their use is cost.

In general, the function of a refrigeration system is to keep a body colder than its environment. This effect is accomplished by absorbing thermal energy (heat) from the cold body and "pumping" it to higher temperature

for rejection to a warm body. The warm body (for example, ambient air) is known as the heat sink. In addition to the thermal energy absorbed from the cold body by the refrigeration system, the heat sink must accept the thermal equivalent of the energy required to drive the system. The temperature level and thermal capacity of the heat sink have important bearing on the capacity, minimum temperature capability, and driving energy requirements of any refrigeration system.

Both air and water can be considered as potential heat sinks. Water cooled systems have the advantage of better energy economy due to lower heat sink temperature and better heat transfer characteristics. However, air cooled units have a number of advantages that tend to offset the improved performance of water cooled systems, particularly in the relatively low capacity systems of interest here. These advantages are all associated with the air cooled system's independence from a cooling water supply. They are simplicity, ease of installation, freedom of location, mobility, the opportunity for completely self-contained units, and more universal application.

Supplements to Refrigeration

There are several supplemental treatments (2, 3) that can be used in conjunction with refrigeration to either prolong the maximum storage life attainable with refrigeration alone, or to permit attainment of the same storage life at higher temperatures. The role of refrigeration in food preservation is to reduce temperature in order to retard the activity of bacteria and fungi and to reduce the rate of composition change due to respiration and enzymatic action. These four factors plus the absorption or development of undesirable odors are the principal causes of spoilage of fresh food. For some commodities, properly applied supplemental treatments will augment refrigeration by also retarding the growth of the decay-causing organisms and/or reducing the rate of chemical activity without undesirable side effects. These supplemental treatments include controlled atmospheres, antioxidants, sprout inhibitors, sterilizing lamps, fumigants, antiseptic washes, and treated fruit wrappers.

The controlled atmospheres category of supplemental treatments usually consists of control of the concentration of carbon dioxide gas from a few tenths of a percent to 100 percent depending on the commodity to be stored. This gas inhibits growth of many kinds of bacteria and fungi and also retards respiration and other chemical changes. Carbon dioxide has been used to extend normal storage times for beef, pork, poultry, fish, eggs, apples, pears and small fruits such as strawberries and red raspberries. In some cases, the desired atmosphere is obtained by sealing the fruit filled room; the normal respiration process then reduces the oxygen and increases the carbon dioxide content of the atmosphere. The desired proportions are maintained by using a gas scrubber to remove excess CO_2 and by ventilation. Dry ice has also been used as the method of introducing CO_2. Disadvantages of the controlled atmosphere method include the necessity for a relatively gas tight room, the danger of suffocation to persons

entering the room, and loss of the desired atmosphere when the door is opened.

Also in the controlled atmosphere category of supplements to refrigeration are air purification and ozone. In the commercial storage of apples activated coconut shell carbon air filters are sometimes used to remove undesirable odors and to retard ripening and the development of scald by removing volatile fruit emanations. These filters are effective in odor removal, but there is some question regarding their effectiveness in retarding ripening and scald. Ozone in concentrations from 1-3 ppm depending on the commodity and storage conditions, has been used to prevent mold on eggs, meat, apples and small fruits.

Ultraviolet lamps have also been used to control bacteria and mold growth, but their effectiveness under storage conditions is questionable. The principal limitations of ultraviolet lamps in this application are: poor penetrating power, hence only surface protection is provided; little if any effect from reflected light, hence dark or shaded areas are unprotected; and undesirable side effects on some commodities.

Fumigation is a highly specialized technique used extensively to preserve the quality of certain fruits and vegetables. Sulfur dioxide fumigation is used for California grapes; most other grape varieties, fruits and vegetables are injured by even weak concentrations of sulfur dioxide. Nitrogen trichloride fumigation has been used successfully for citrus fruits, cantaloupes, tomatoes, and peppers; ethylene oxide is used for high moisture content dried fruits such as figs, prunes and dates.

Antiseptic washes are achieved by the addition of non-toxic antiseptic materials to waters used for produce washing. Water containing 50-100 ppm chlorine in the form of hypochlorite solutions or as chloramines is frequently used. The actual value of this treatment in reducing decay is unknown, but is beneficial in reducing the contamination of the wash water, particularly in preventing the build-up of bacteria and fungi if the water is recirculated. Special washes are also used to prevent certain specific types of decay in citrus fruits and poultry.

Oil-impregnated and other types of treated wrappers are used to control apple scald and molds and decay of several other kinds of fruits in refrigerated storage. Antioxidants of various kinds have been shown to increase the storage life of fats, oils and frozen poultry by retarding rancidity.

Perhaps the most interesting supplement to refrigeration from the standpoint of the developing nations is the use of sprout inhibitors to retard development of sprouts in storage. These inhibitors are particularly valuable for vegetables that are stored at temperatures higher than the desired optimum for maximum storage life. Methyl ester of naphthalene acetic acid sprayed or dusted on potatoes has resulted in their remaining dormant for four or five months at 50-55 F. A solution of maleic hydrozide has been used to retard the sprouting of onions, potatoes and carrots in storage by spraying the plants a few weeks before harvest.

ALTERNATE CONCEPTS

Several conceivable methods of providing refrigeration or cooling in the developing nations are listed below.

1. Vapor compression cycles.
2. Absorption cycles
3. Air cycles
4. Thermoelectric
5. Steam jet
6. Limited capability, environmental-dependent systems.

The first five methods could properly be classified as refrigeration systems in the sense that they are capable of producing a significant reduction in temperature below the minimum temperature of the environment. For example, even in hot climates each is capable of providing refrigeration at 40 F and, with the exception of the steam jet method, all are capable of 0 F and lower refrigeration temperatures. Each is a practical method in the sense that it has actually been applied to refrigeration requirements of one type or another.

On the other hand, the limited capability, environmental-dependent systems could properly be classified only as cooling systems in the sense that they are capable of little or no reduction in temperature below the minimum encountered in the environment. However, under the environmental and refrigeration requirement conditions in which these systems would be useful, they would, in general, have significant initial cost, simplicity and energy economy advantages over the methods 1-5. The environmental-dependent cooling systems include nocturnal cooling by forced convection or radiation, evaporative cooling, and cooling by means of cold water if available from local streams.

These refrigeration or cooling systems and their possible application to the requirements of the developing nations are discussed in the material that follows.

Vapor Compression Systems

Vapor compression cycle refrigeration is the conventional system used in a wide variety of applications ranging from small household refrigerators to large commercial and industrial air conditioning applications. The principal components of the compression cycle are the compressor, condenser, evaporator and throttling or expansion valve. A schematic diagram of an electrically-driven, air-cooled vapor compression system is shown in Figure 1. The cycle conditions given are typical of a system using Refrigerant-12 as the working medium and serving a 50 F refrigeration load. The principal energy requirement is shaft power to drive the compressor. Electric motors are the most common source of this power although steam turbines and internal combustion engines have been used. The vapor compression system is easily the most efficient system (excluding

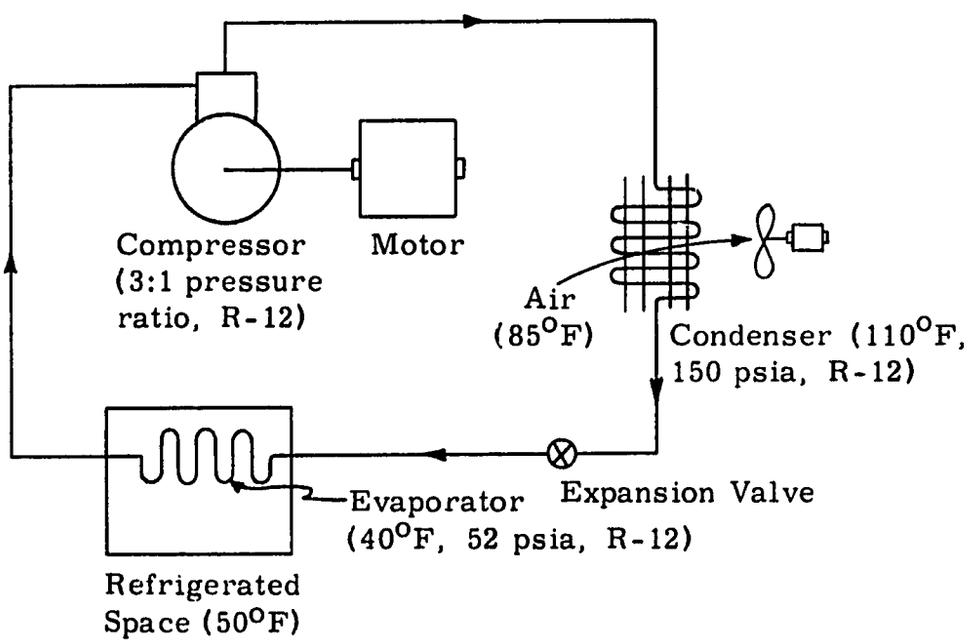

Fig. 1. Schematic - Vapor Compression Refrigeration.

the limited capability, environmental-dependent systems) and requires only about one quarter of the driving energy of its closest competitor.

Well developed, highly reliable hardware for the vapor compression cycle in a wide range of sizes and types is available and has been widely applied. In the sizes of equipment of interest here (up to about 10 Hp), five year warranties on sealed vapor cycles have become standard in the industry. Both open (externally driven through a shaft seal) and hermetic or semi-hermetic (motor and compressor both sealed within a single casing) electrically driven types are available. The principal drawback of the vapor compression system for the developing nations' application appears to be the fact that the machinery required is of a fairly complex nature requiring the specialized skills of an industrial society to produce. In addition, in its most desirable form in the sizes of interest here, the vapor compression cycle requires high quality energy in the form of electricity. The latter may not always be a disadvantage, particularly in those instances where installed electrical capacity is not adequately utilized. In this regard, even those systems not requiring electricity as the main source of energy are apt to use it to advantage to drive auxiliaries such as pumps and fans.

Absorption Systems

Absorption cycle refrigerators are heat-operated; they can, theoretically at least, be driven by steam, combustion, electricity, waste heat from a diesel engine, solar energy or any other source of heat available above a certain temperature level. They require at least two working substances, a refrigerant and an absorbent for the refrigerant. The major components in a simple absorption cycle are the generator, condenser, evaporator, absorber, expansion valve and solution pump although the last two are sometimes eliminated in ammonia-water systems by the addition of an inert gas, hydrogen. A schematic diagram of a simple closed cycle absorption system is shown in Figure 2. The typical cycle conditions given are for the ammonia-water system in which ammonia is the refrigerant and water the absorbent.

Absorption cycles have been designed for both continuous and intermittent operation. Many types have been proposed and are discussed in the literature, but only a few have achieved commercial significance. Neglecting open systems which are suited primarily to air conditioning or "comfort cooling" applications, the two systems which have been most successful are water-lithium bromide and ammonia-water. The water-lithium bromide system is the most efficient, especially for large, water-cooled air conditioning applications. However, since the refrigerant is water the minimum temperature capability of the system is about 36 F with the result that maintaining refrigerated space temperatures less than 45 F is difficult at best.

The principal impetus behind the consideration of absorption systems for the developing nations appears to be the possibility of utilizing solar energy to reduce power costs. Tabor[1] has summarized the development

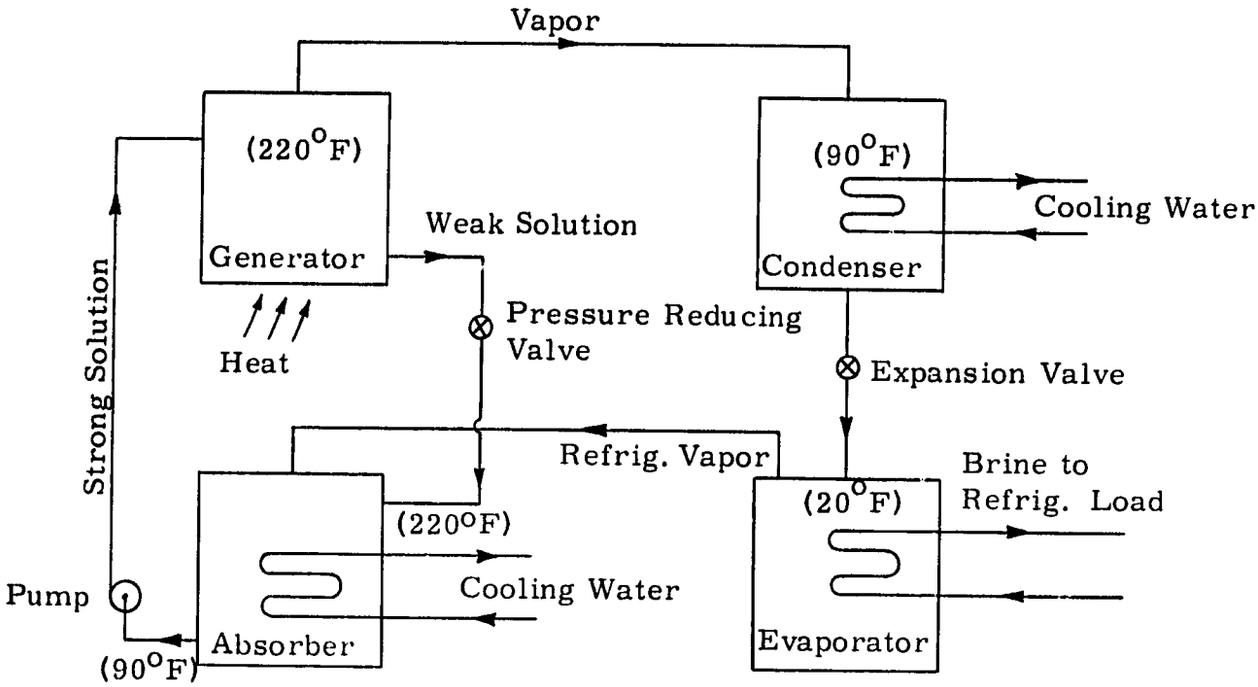

Fig. 2. Schematic - Simple Absorption System.

efforts of a number of workers in this field and has concluded that the closed cycle absorption machines are the most promising heat operated cooling devices. He also concludes that the intermittent solar-operated absorption cycle domestic refrigerator is a promising development, but cites the need for the following improvements:

(1) a lower pressure system to allow lighter construction,

(2) an improved performance factor; and

(3) more efficient solar collectors.

In discussing economic aspects, Reference 1 assumes that solar-operated cooling devices can eventually be made as efficient for the same initial cost as conventional heat-operated machines and then proceeds to compare the cost of heat derived from fuel with the cost of heat derived from fuel with the cost of heat derived from a solar collector However this approach ignores the problem of solar energy storage and the competition of the electrically driven vapor compression cycle

Kapur(4) has proposed a combination system involving dehydration of air by means of absorbents or absorbents followed by sensible and evaporative cooling that appears to show promise for air conditioning applications. Solar energy is used to regenerate the sorbent material. He points out the scarcity of available information of a practical nature regarding this type of system. The minimum temperature (about 60 F) obtainable under the conditions considered by Kapur, while satisfactory for air conditioning applications, is not generally of interest for food preservation and storage

Oniga(5) has presented the case for a solar energy driven absorption refrigeration system for household refrigerator application The proposed system based on the ammonia water combination, uses an intermittent cycle in which the generator is heated by a fixed collector for a four hour period daily thereby providing adequate condenser charge to refrigerate for a 24 hour period On the basis of costs in Brazil this solar energy driven absorption refrigerator including the collector, is estimated to cost 20% more than a conventional vapor compression machine. This deficit would be made up in about five years by the absence of charges for electricity to operate the unit However, one shortcoming of the system not discussed in Reference 5 is the necessity for a larger capacity collector and some means of thermal storage or an auxiliary method of heating the generator should cloudy conditions prevail for an entire day or for several consecutive days. The additional investment required to make the system function during prolonged overcast periods would presumably tip the economic balance in the direction of the conventional mechanical compression system.

Chinnappa(6) has built and tested a demonstration model of a solar operated intermittent absorption cycle refrigerator using a flat plate collector and the ammonia-water refrigerant-absorbent combination. He has achieved actual refrigeration cycle performance factors up to 0.28 and actual ratios

of total effective cooling to total incident radiation up to 0.60. On the basis of present results, he has concluded that one pound of ice per day can be produced on a clear day for every three to four square feet of collector surface and that this performance could be improved considerably by using selective radiation coatings. However, extrapolating the present results to a village-sized ice maker of one ton daily capacity and using an optimistic collector cost figure of $20 per square meter[1], the cost of the collector above would be in excess of $11,000, a prohibitive figure.

Air Cycle Systems

Air cycle systems consist of various combination of compressors, heat exchangers and turbines in which the refrigerating effect is ultimately obtained from the temperature drop in a refrigeration turbine. A schematic diagram of a typical air cycle system is given in Figure 3. The conditions indicated are for an air conditioning application and the calculated coefficient of performance for these conditions based on optimistic component efficiencies is about 0.7. For the greater working temperature interval required for food preservation applications the coefficient of performance would, of course, be lower. Air cycle systems characteristically have low coefficients of performance (high energy requirements per ton hour of refrigeration), require high grade energy (a source of compressed air or shaft power from an electric motor or a turbine) and involve expensive, high speed, precision machinery. Their principal advantage is light weight, compact equipment for a given refrigeration capacity. Their principal application has been in high speed military aircraft where they provide pressurization as well as cooling and where a high capacity source of compressed air is available from the jet engine compressor. The Hilsch or vortex tube is a variant of air cycle systems that will perform the function of a refrigeration turbine but much less efficiently and without contributing mechanical work to the cycle. Its principle virtue is simplicity (the vortex tube itself has no moving parts) but it is only useful when compressed air is available virtually without charge or when the refrigeration load is small enough to make the cost of the compressed air used negligible. In general, the attributes of air cycle systems make them unsuited to the needs of the developing nations.

Thermoelectric Refrigeration

Thermoelectric refrigeration is based on the fact that when an electric current is circulated through a circuit composed of two dissimilar conductors, heat is evolved at one junction and absorbed at the other. This phenomenon is known as the Peltier effect, named after the French physicist who discovered it in 1834. It involves the direct conversion of electricity into heat and is reduced to practice as shown in the schematic diagram of Figure 4. The active elements are p- and n- type thermoelectric materials arranged in series electrically and in parallel thermally. As DC current is passed through the circuit heat is absorbed at one end of each element making that side of the thermoelectric device cold and heat is rejected at the other ends making that side hot. Reversing the direction of the electrical current will interchange the hot and cold sides.

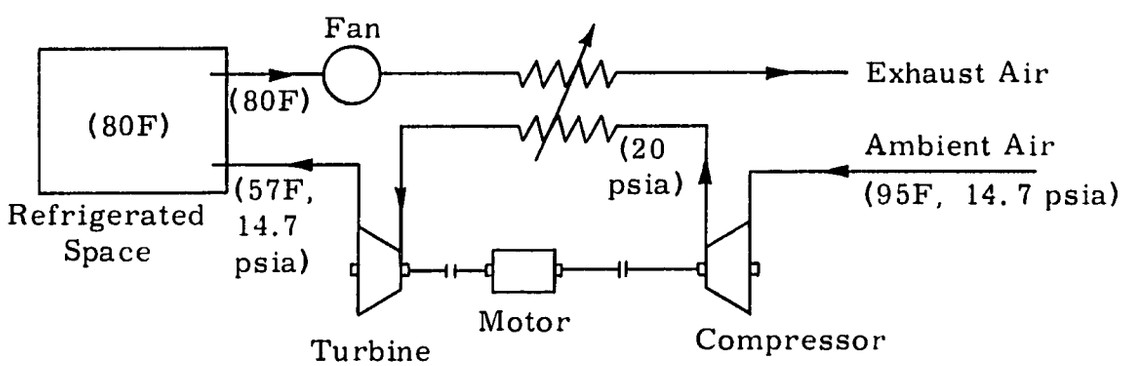

Fig. 3. Schematic - Air Cycle Refrigeration.

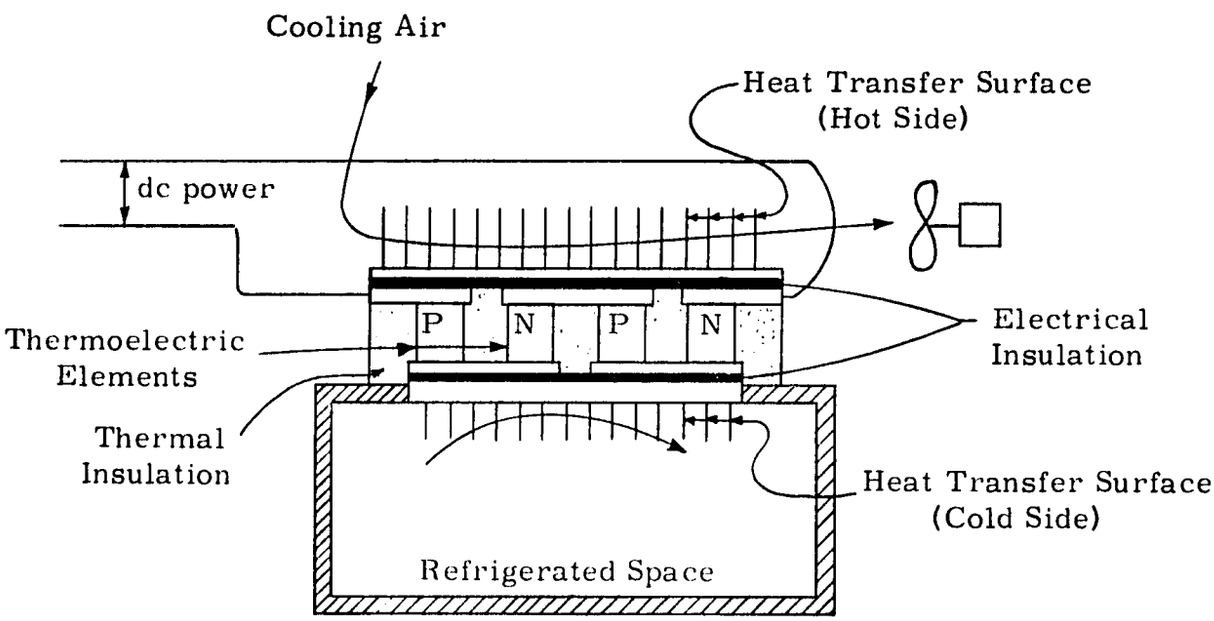

Fig. 4. Schematic - Thermoelectric Refrigeration.

Thermoelectric refrigeration advanced rapidly during the 1950's with the development of semiconductor materials with thermoelectric properties greatly improved over those of any materials previously available. However, the rate of improvement has decreased considerably in the recent past and the performance appears to be reaching a plateau at a level considerably below that of the vapor compression cycle. A significant breakthrough in thermoelectric materials will be required to result in a real threat to the mechanical compression system in most applications. Thermoelectric refrigeration is most suited to special applications where its unique properties such as low noise, potentially high reliability because of no moving parts, adaptability to very low refrigeration capacity requirements and ease of reversal to provide heating or cooling are important advantages. Currently available thermoelectric heat pumping modules cost on the order of 0.3 dollars per Btu/hour of heat pumping capacity (about $3500 per ton of refrigeration).

In general, thermoelectric devices at present are not suited to the problem at hand because of their low coefficient of performance and high initial cost. In addition, they require a high grade source of energy, DC electricity.

Steam Jet Systems

Steam jet systems derive their refrigeration effect from the evaporation of water at low pressure. The principal components of these systems are the evaporator, steam jet ejector and condenser. In addition, auxiliaries in the form of a non-condensible purge system, pumps and control components are required. A schematic diagram of a steamjet system showing typical operating conditions is given in Figure 5. These systems are simple, rugged, suitable for outdoor installation, have no moving parts in the major components and have low maintenance costs. However, their energy economy is poor and since the refrigerant is water, they have the same low temperature limitations as the lithium bromide-water absorption cycle.

Limited Capability, Environmental-Dependent Systems

In this category there are several simple, low cost, low energy requirement systems. Although they offer little or no capability to provide temperatures below those naturally occurring in the environment at some period during the day, they may suffice for the storage of some commodities under certain climatic or environmental conditions. These systems include nocturnal cooling by forced convection or radiation, evaporative cooling, and cooling using cold water from local streams as the heat sink. They would be suitable for the storage of commodities for which moderately high storage temperatures are acceptable, such as potatoes.

Evaporative cooling systems derive their cooling effect from the reduction in dry bulb temperature achieved when relatively dry air absorbs additional moisture through an adiabatic saturation process. In this process dry air is passed over a surface wetted with water; heat to evaporate the water is

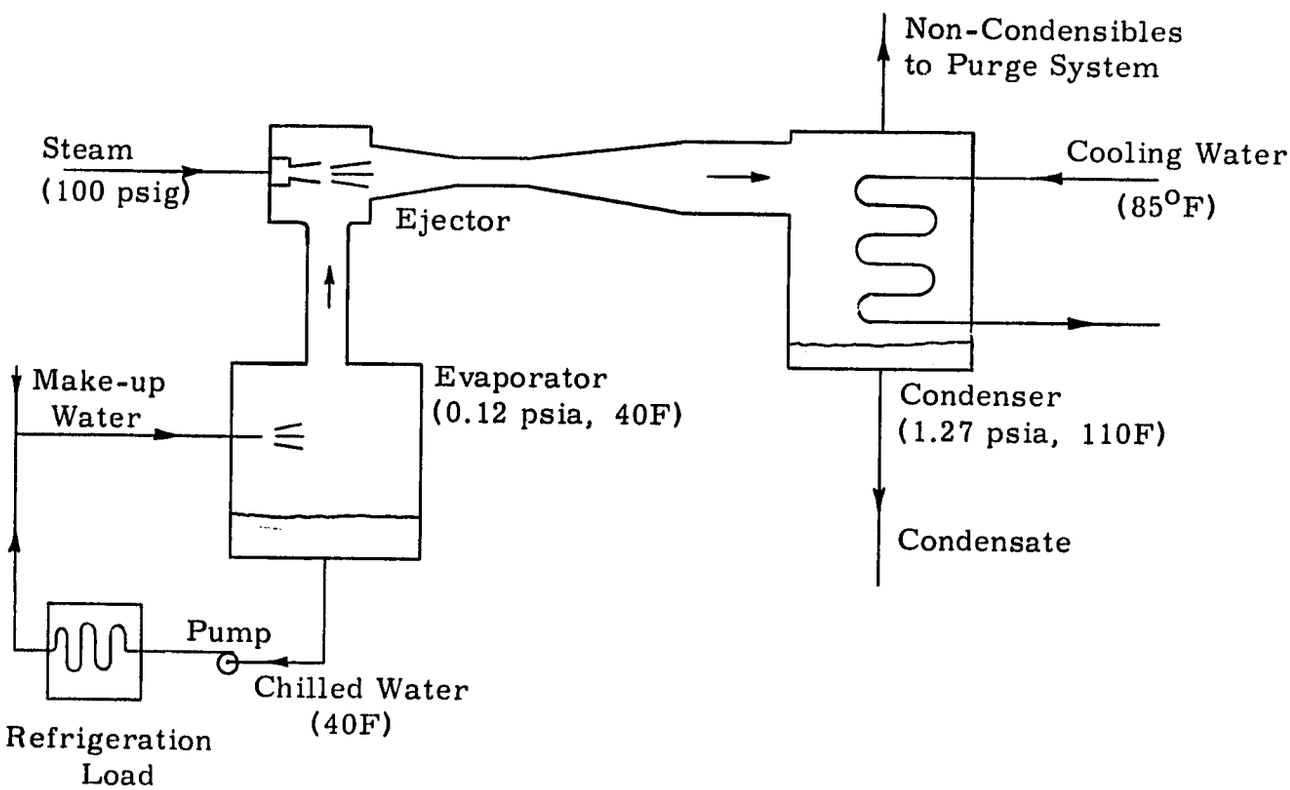

Fig. 5. Schematic - Steam Jet Refrigeration.

taken from the air stream resulting in a lower temperature but higher humidity air stream at the outlet. This system is illustrated in Figure 6. The equipment required is simple and low in cost and the only energy requirements are for fans and pumps to circulate the required air and water. Evaporative systems are the oldest form of air conditioning known to man and still find extensive application in hot, dry climates such as the southwestern United States.

The temperature reduction capability of simple evaporative cooling systems is limited to the difference between the dry bulb and the wet bulb temperatures of the incoming air, i.e., the wet bulb depression. For example, the minimum temperature possible with 70 F dry bulb temperature, 20% relative humidity inlet air is 50 F at 100% saturation. In the more practical case of 90% relative humidity of the outlet air stream the dry bulb temperature at the outlet would be 51.5 F.

A forced convection nocturnal cooling system would consist of a well insulated shelter equipped with fans for night ventilation and doors for sealing the enclosure during the day. Such a system is illustrated in Figure 7. Operation of this system depends on the daily temperature variation between daytime highs and nighttime lows and the thermal storage capacity of the structure and the commodity stored. The daily range of temperature is the difference between the average of the daily maximum dry bulb temperatures and the average of the daily minimum temperatures. This range is highest in semi-arid or desert regions and at high elevations, it is lowest near the oceans or very large lakes. For example, the daily temperature range in July for the Rocky Mountain area of the United States is 33-42 F, for the area from the Mississippi River to the Rocky Mountains it is 24-33 F, and for the Eastern Seashore it is only 12-18 F [7]

A preliminary analysis of a forced convection nocturnal cooling system for potato storage has been made. A 2000 cu. ft. shelter with 7' x 7' x 41' inside dimensions insulated with the equivalent of 4 inches of cork with wood stud framing was assumed. This structure would accommodate 14 tons of potatoes. An arbitrary daily ambient temperature cycle of 85 F for 12 hours (daytime) followed by 3 hours at 55 F, 6 hours at 45 F, and 3 more hours at 55 F was assumed. The average temperature of the interior and the potatoes was set at 55 F. The heat loads (consisting of conduction through the structure, air infiltration and heat of evolution from the potatoes during the 18 hour period when ambient temperature exceeds or equals interior temperature) were assumed stored in the potatoes resulting in an average commodity temperature rise of 3.5 F. During the 6 hour nighttime period when the ambient temperature is 45 F the doors are opened and the fans are used to circulate air through the structure to remove the stored heat plus the heat of evolution of the potatoes to restore them to their original temperature at the beginning of the daily cycle. Allowing a 2 F temperature rise in the cooling air, about 6600 cfm are required. This system would obviously not perform as well if the volume of potatoes stored is reduced, so it would be desirable to use a movable partition to keep the commodity density as high as possible in the portion of the shelter in use.

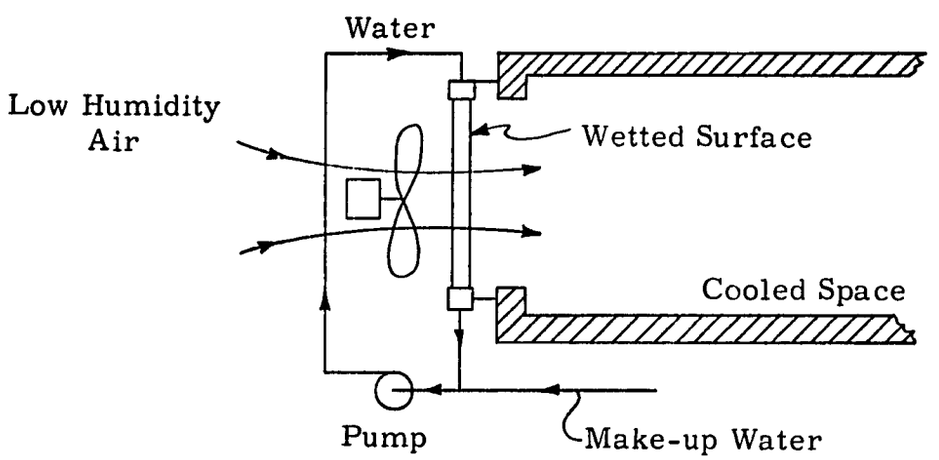

Fig. 6. Schematic - Evaporative Cooling.

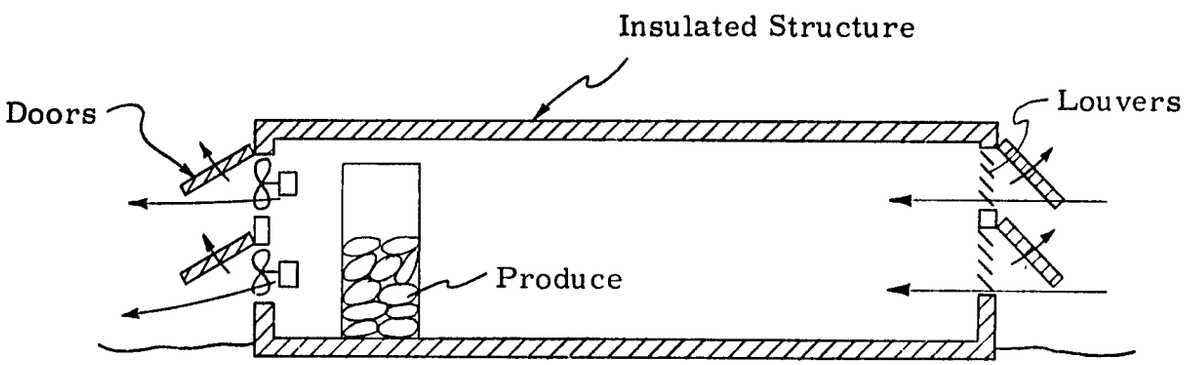

Fig. 7. Nocturnal Cooling - Forced Convection.

To reduce the possibility of dehydration of the produce due to the relatively high velocity air movement during the nocturnal cool-down period it may be desirable to combine this system with evaporative cooling. In low humidity environments this combination would also make lower commodity temperatures possible. Although marginal in capability, its simplicity and cost advantages may make the forced convection nocturnal cooling system very attractive for potato storage, particularly if used with sprout inhibitors to permit storage at temperatures somewhat higher than the normal optimum.

Nocturnal cooling by means of radiation is similar in concept to the forced convection nocturnal cooling system. Both are cyclical systems that rely on insulated storage, with some commodity temperature rise due to absorbing thermal energy during the day, coupled with nighttime cooling to remove the heat of the day. However, in the radiant system nocturnal cooling is accomplished by opening the roof of the shelter to permit heat rejection by radiation to the night sky. Temperatures below those of nighttime ambient air are possible if a cover transparent to infrared radiation is provided when the roof is opened.

The possibility of the existence of streams with water temperatures of about 40 F the year 'round at the higher altitude areas in Peru has been reported by the field survey teams. The advantages of direct use of this source of cooling for commodities adapted to storage temperatures of about 50 F or higher are obvious. One method by which heat exchange with the cooling water could be accomplished is by a system similar to that used for evaporative cooling (see Figure 6) except that the outlet air would tend to be at reduced, not increased, humidity as compared to the inlet air) and the water would not be recirculated. Allowing a 5 F temperature rise in the water, a stream flow of 5 gpm would provide a ton of refrigeration capacity.

Refrigeration System Energy Requirements

Typical energy requirements for four different types of refrigeration systems are presented in Table 3. The figures presented are the requirements for driving the refrigeration cycle only; pump and fan powers for circulating water, air or solutions are not included. These auxiliary requirements will vary considerably for a given system type from installation to installation and are small in comparison to the main energy requirement of the refrigeration cycle. For those systems requiring electricity as the energy source, coefficient of performance (CCP) is defined as the dimensionless ratio of refrigeration capacity to the heat equivalent of power input. For those systems requiring thermal energy as the driving force, the same dimensionless quantity, the ratio of refrigeration capacity to heat input is known as the performance factor (PF). Table 3 illustrates the large advantage in energy economy available with the vapor compression cycle. However, the higher costs of electrical energy must be considered on the basis of the local economy before a final comparison can be made.

Table 3

TYPICAL ENERGY REQUIREMENTS
50 F Refrigerated Space Temperature
110 F Condenser or Hot Side Temperature

Refrigeration Method	Source of Energy	COP or PF	Energy Required (per hour per ton of refrigeration)	Thermal Equivalent of Energy Required (per hour per ton of refrigeration)	System Fuel Consumption (per day per ton of refrigeration)
Vapor compression	Electricity	2.5	1.4 Kw hr	4800 Btu	3.2 gal
Absorption	Heat	0.4	30,000 Btu at 250 F	30,000 Btu	6.4 gal.
Steam Jet	Steam	0.25	40 lb 100 psig steam	48,000 Btu	12 gal
Thermoelectric	Electricity	0.55	6.4 Kw Hr	22,000 Btu	15 gal.

For the purpose of comparing the four systems listed in Table 3 on a common basis regarding energy requirements, system fuel consumption assuming diesel oil as the energy source is given in the last column of Table 3. Power for the electrically driven systems (vapor compression and thermoelectric) is assumed to be provided by a diesel generator set with a 30% efficient diesel and an 85% efficient alternator. The absorption system is direct fired with an assumed thermal efficiency of 80% for the combustion heater. The steam jet system is driven by a diesel oil-fired steam boiler of 70% thermal efficiency. It is seen that the vapor compression system still maintains a 2:1 advantage over its nearest competitor.

Typical Initial Costs

Typical initial cost data for five types of refrigeration systems are presented in Table 4. With the exception of the thermoelectric system, these data apply to relatively large capacity machines (5 tons or more); smaller machines would cost more per ton of refrigeration capacity.

Absorption System Driven by Waste Heat from a Diesel Engine

One system concept that has been considered to increase overall energy utilization in the developing nations is the combination of refrigeration and electric power generation in which waste heat from a diesel engine is used to drive an absorption cycle refrigeration system. A 50 Kwe diesel generator is an appropriate size for a community power plant. Waste heat from such a plant would be available from the cooling water and from the exhaust. The energy in the exhaust gases is not readily utilized because of the deterioration in diesel engine performance resulting from back pressure increase whenever heat exchange with the exhaust gases is attempted. An additional problem is the expense of the gas to solution heat exchanger which must be of stainless steel or other highly corrosion-resistant material to withstand the effects of the corrosive fluids precipitated when diesel exhaust gases are cooled. However, the waste heat in the cooling water is a 50 Kwe diesel generator would amount to about 248,000 Btu/hr at a maximum coolant temperature of 185 F. In conventional engines the coolant would be returned to the diesel at about 170 F.

Normally absorption systems require regenerator temperatures on the order of 250 F. However, more complex systems can operate at 180 F at the expense of reduced performance factor and recent investigations of solar energy driven absorption systems (for which low generator temperatures are desirable) indicate generator temperatures on the order of 170 F may be useful in fresh food preservation applications, particularly if low absorber and condenser temperatures are possible as in water cooled units.

Assuming that 170 F absorption cycle generator temperatures are possible (low temperature differences for heat transfer and a few degree increase in temperature of the coolant returned to the diesel are required), absorption

cycle performance factors on the order of 0.3 may be achieved. On this basis, the waste heat from a 50 Kwe diesel would be adequate to drive a 6 ton capacity absorption cycle. Such a unit would require considerable development and would have large heat exchangers relative to its capacity, but the absence of any significant operating charges for energy make such a system worthy of further consideration.

Table 4

Typical Refrigeration System Initial Costs

System	Initial Cost $/ton	Remarks
Vapor compression[8]	250	Chilled water at 40 F, recip. compressor, 5 ton built, electric drive.
Absorption (lithium[8] bromide-water)	225	Chilled water at 45 F, 50 ton unit, water cooled.
Steam Jet[8]	200	Chilled water at 45 F
Thermoelectric	3500	Thermoelectric heat pumping modules only; heat exchangers, power supply, controls, etc. not included--capacity rated at 110 F hot junction, 38 F cold junction, maximum COP.

SELECTED SYSTEMS

This section covers available equipment that could be used to meet the requirements of the developing nations either without modification or with only minor modification as may be required in some cases to meet unusual environmental conditions. Three types of equipment are discussed; walk-in coolers for commodity storage, vapor compression refrigeration systems for the walk-in coolers, and ice-making machines. General characteristics, technical data and cost data are presented.

Walk-In Coolers

In this discussion, walk-in cooler will be taken to mean the cold storage facility not including the refrigeration system, i.e., the refrigerator cabinet without the heat pumping mechanism. The major elements of walk-in coolers are the structure, the thermal insulation, a vapor barrier, and a tight-fitting door or doors. Also desirable are interior lighting, shelves, racks or hooks for convenient commodity placement, and other auxiliary features.

Walk-in coolers are available in sectional construction for ease of transportation and installation and to provide greater flexibility of sizes. Prefabricated wall, ceiling and floor sections are manufactured as separate components and the cooler is assembled at the site. A range of sizes is achieved by varying the number of sections used and future expansion is possible by simply adding more of the prefabricated sections or panels. Structural elements may be either wood or metal with wood the most commonly used. Exteriors are of marine plywood, aluminum, enameled steel or stainless steel. Most are suitable for outdoor erection if a separate roof or special roofing materials are added. Interiors are of odorless woods such as fir, spruce or mapel, or of steel or aluminum. Each prefabricated section is provided with thermal insulation and a vapor barrier. The insulation for coolers in the temperature range of interest here (30-40 F or higher -for normal fresh food storage) is usually about 4 inches thick and frequently consists of semi-rigid fiberglass. Freezers for frozen food storage at about 0 F require about 6 inches of thermal insulation. Special panels for accepting access doors of varying sizes and types are available and at least one vapor-proof light is normally installed in the interior as standard equipment.

The size of cooler required is, of course, dictated by the quantity and type of commodity to be stored at any one time. In general, about 50% of the interior volume of a cooler can be occupied by the stored commodity, the rest is required for access aisles, cooling coils, air circulation, etc. Excluding meats, which may be much denser, most commodities when packed for storage have a net weight density of from 20 to 40 lb/cu ft with 30 lb/cu ft a good average for estimating purposes. On this basis, a cooler with a gross refrigerated volume of 1000 cu ft could accommodate 7 1/2 tons of produce. As a specific example, potatoes bagged in 100 lb sacks weigh 27.2 lb cu ft[2] with the result that about 7 tons could be accommodated in a 1000 cu ft cooler.

The required capacity of the refrigeration unit serving a walk-in cooler is dictated by the maximum anticipated heat gain of the cooler when the interior is at the desired temperature. This heat gain or refrigeration load is composed of four general sources of heat; wall heat leakage, air changes, product load and miscellaneous. Wall heat leakage consists of the thermal conduction through the walls, floor and ceiling of heat from the environment including solar radiation if the cooler is exposed to the sun. The air change component of the load results from air infiltration and from the introduction of warm air from the environment whenever the door is opened. Product load arises from the placement of warm commodities in the cooler and from the fact that fresh fruits and vegetables are alive and certain exothermic processes continue after they are placed in storage. The amount of liberated heat, generally known as heat of respiration, varies with the temperature and type of produce. For example, one ton of potatoes at 40 F will evolve about 1400 Btu in a 24 hour period. The miscellaneous component of the refrigeration load consists of the heat gain from human occupants of the refrigerated space and from electrical equipment such as lights and blower motors located within the cooler.

The refrigeration load for a given size of walk-in cooler can obviously vary widely depending on the climate, the interior temperature desired, the amount of exposure to the sun, the construction of the cooler and the amount and type of insulation used, and the manner in which the cooler is used because of the effect on the number of door openings, the lighting load, the load due to human occupants, etc. Methods are available for calculating the refrigeration load when all these factors about an installation are known.[9] Cooler manufacturers generally recommend a refrigeration unit of a specified capacity for each of their coolers for "average" service. Unusual requirements in a given cooler installation may dictate the use of larger or smaller capacity equipment and must be evaluated for each installation.

For good quality walk-in coolers of the type described above, a 35-40 F storage unit of 1000 cu ft capacity in average service will have an hourly heat gain on the order of 10,000 Btu/hr. Normal practice for a 35-40 F cooler is to size the refrigeration system to handle the daily load (24 hours) in 16 hours of compressor operation. This approach allows for natural defrost of the evaporator coil during the off periods of the refrigeration system. The result is that the refrigeration system must be rated at one and one-half times the hourly refrigeration load, i.e., 15,000 Btu/hr in this example.

Cost data for walk-in coolers currently available from U.S. manufacturers are presented in Figures 8 and 9. These data are list prices for 35-40 F coolers in average service, i.e., about 95F ambient temperature, protected from the sun, and with a "normal" number of door openings, warm produce placement, etc. Figure 8 shows cost for the cooler only and includes the complete "box" without refrigeration system. Figure 9 shows costs for the complete cooler including a complete vapor compression refrigeration system requiring, in the case of air cooled units, only a source of electricity

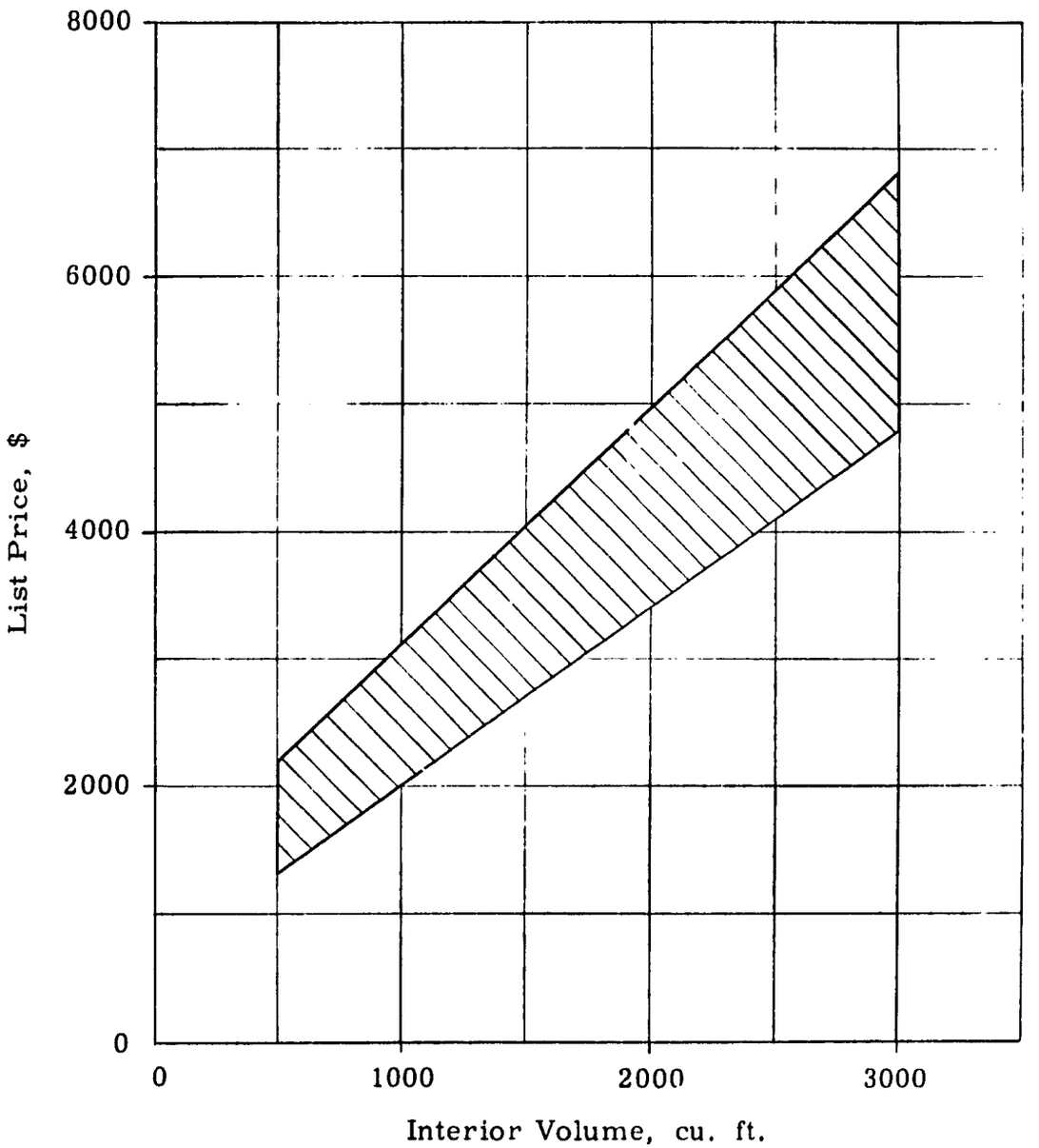

Fig. 8. Walk-In Cooler Costs. (Cooler Only - No Refrigeration Unit.)

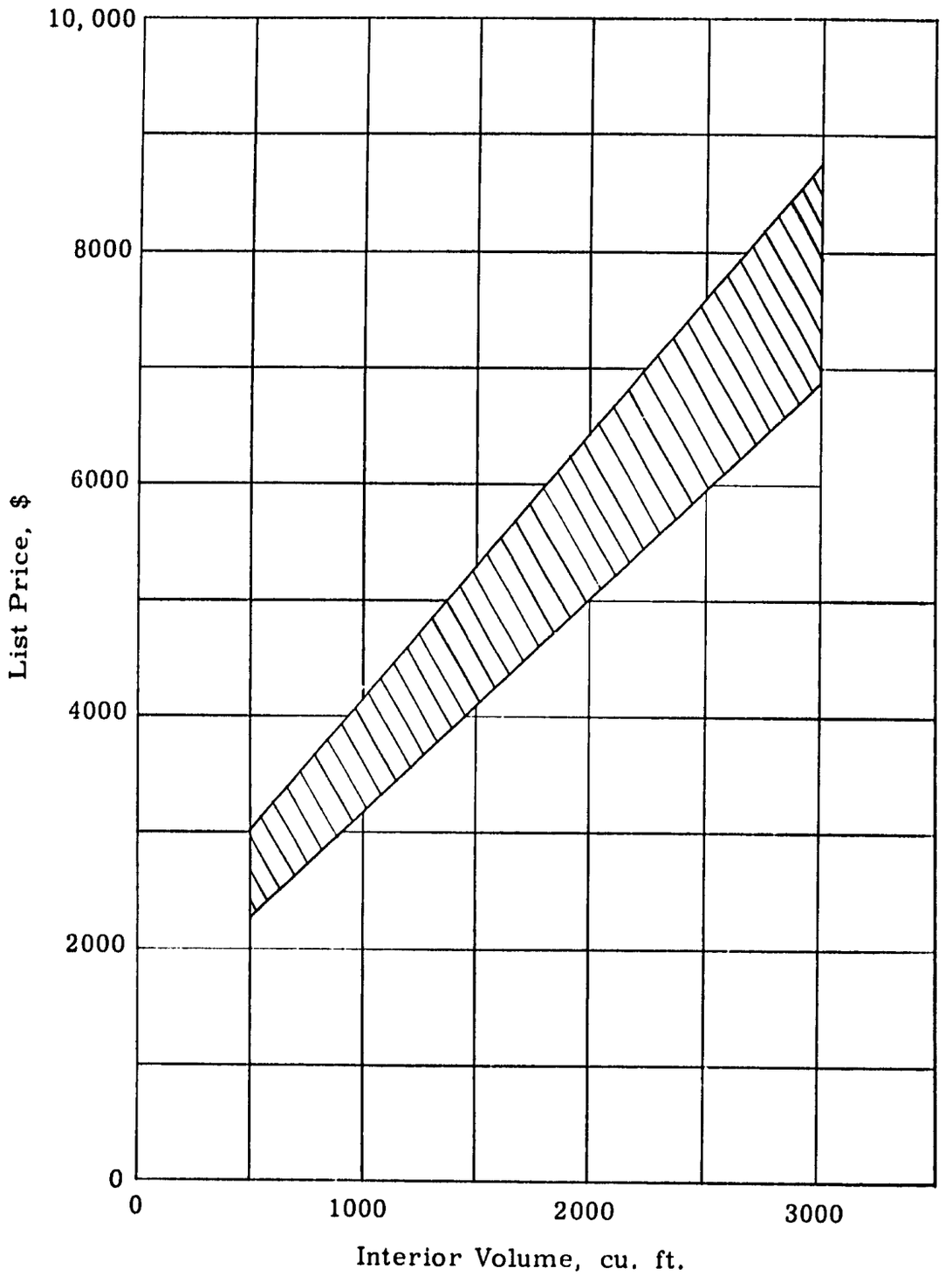

Fig. 9. Walk-In Cooler Costs. (Complete - Including Refrigeration Unit.)

for operation. The range of costs indicated by the shaded areas results primarily from differences in insulation thickness, type of exterior and interior cladding used, and other features such as trim, door construction and hardware quality. Coolers with wood exteriors and interiors are the lowest in cost; those with aluminum or steel clad exterior and interior surfaces are in the higher portion of the price range. Stainless steel or special decorative finishes are also available at costs even higher than those indicated in the figures. Note that the spread between high and low cost units is less for complete coolers than for the coolers only (without refrigeration units). This is partially caused by the fact that the lower cost coolers require larger capacity refrigeration units for the same storage volume.

Note that the cost of the insulated structure or cooler only is the major part of the cold storage facility initial cost. The refrigeration system is roughly one-third of the total cost. The complete refrigeration unit for a 1000 cu ft cooler costs about $1000; the unit for a 3000 cu ft cooler is approximately $2000.

Ice Makers

Self-contained ice cube makers suitable for use in the developing nations are available commercially. In this sense, ice cube is taken to mean ice in small chunks of any shape including flake ice. These ice makers are complete, automatic, heavy duty machines available in capacities ranging from one to twenty tons of ice per day. Prices range from approximately $2500 for a one ton/day machine to about $21,000 for 20 tons/day capacity machines.

DEVELOPMENT OPPORTUNITIES

Locally Built Insulated Structures

The first opportunity for development in the area of fresh food preservation in the developing nations appears to be in establishing techniques for the local construction of insulated structures to serve as walk-in coolers. The insulated structure is required regardless of the type of refrigeration or cooling system used. In commercially available walk-in coolers, the cost of the "box" is about two-thirds of the total cost of the complete unit including the vapor compression cycle refrigeration system. The use of local materials of construction and local labor, presumably available at low cost, should make large cost savings possible. The type of construction used would, of course, vary from locality to locality depending upon the types and costs of materials available.

Wood appears to be the most promising structural material although many others such as concrete, brick or stone could be used. Many materials have approximately the same insulating qualities as fiberglass, the material used most frequently in commercially available walk-in coolers. These materials include cotton insulating batt, felted cattle hair, mineral wool, bulk wood fiber batts, corkboard, insulating board made from cane fiber, expanded vermiculite and many others. The principal problems associated with local construction would probably be in providing an adequate vapor barrier and protecting the materials of construction against vermin, insects, rot and other environmental factors. Imported chemicals or other materials may be required to solve these problems.

The first step in a program to develop techniques for local construction should be a survey of typical regions of interest to determine what raw materials are available for possible use as structural and insulating materials. In selecting materials, consideration should be given to establishing techniques for local processing, such as pressing cane fiber into insulating board. Preliminary designs and cost estimates should then be made on the basis of the best of whatever design data are available. If the results of preliminary estimates are favorable, any missing materials properties (such as thermal conductivity, specific heat, density, etc.) data must be supplied by making appropriate measurements. The next step should be to develop methods for establishing an effective vapor barrier and for protecting the insulating and structural materials from vermin, rot, insects, etc. Research in protective chemicals should be conducted if required. A detailed design study and construction of a pilot model should then be carried out. The final step in the program would be performance and durability tests conducted under conditions of actual application at a selected pilot project site.

Transportation and Storage Systems Using Ice for Refrigeration

Another opportunity for development appears to be a community system for transportation and short-term storage based on a central ice plant and small insulated containers and/or trailers using ice and salt for refrigeration. This is basically the system used in technically advanced countries before the advent of the mechanical household refrigerator. It is also the system used so successfully by the railroads for many years and is still the

predominant method of commodity refrigeration in that industry. The use of small trailers would permit transport over poor roads using jeep-like vehicles, draft animals or even manual labor as motive power. The principal disadvantages of this system are the inconvenience of ice and salt, the cost of labor for handling ice and the inability of the system to achieve the low temperatures required for frozen food storage. None of these disadvantages would appear to be of any importance in the developing nations. This system would also be well adapted to the needs of fishing villages.

The first step in the development of this system should be a detailed investigation of the economics of the system in one or more typical communities. Consideration should be given to the adaptation of the techniques for local fabrication of insulated structures, as developed in the program recommended above, to the problem of constructing smaller insulated containers and/or trailers. The use of simpler ice making machinery employing more hand labor for control and ice handling than is practiced in the advanced nations should be considered. Assuming favorable results from such a study a pilot project could be undertaken. The necessity for experimental work to develop engineering data is not anticipated.

Limited Capability, Environmental Dependent Systems

The possible application of simple, low cost, low energy requirement systems should be explored at once because of their decided advantages in those situations where they would be useful. These systems include nocturnal cooling by radiation or forced convection, evaporative cooling, and the use of cold water from local streams as a direct source of cooling. Nocturnal cooling by radiation and direct cooling by means of cold water could be implemented without the use of sophisticated machinery or energy sources of any kind if doors in the nocturnal radiation system are actuated by hand and thehead available in the stream is used to circulate the water in the direct cooling by cold water system.

The first step in a program aimed at developing these systems would be examination of local commodity storage requirements, weather data and other environmental factors. For typical localities in which favorable climatic conditions exist, detailed analyses of these systems should then be made. Those that depend on thermal storage for successful operation should be subjected to transient analyses utilizing analog or digital computing equipment and actual weather data taken on an hourly basis. Since these systems are marginal in capability, they must be carefully engineered or they are doomed to failure. Experimental prototypes could then be constructed for proof of feasibility tests at selected pilot project sites.

Low Generator Temperature Absorption Systems

Contingent on the development of low cost solar collectors or the application of diesel generator sets to community power generation, absorption cycle refrigeration systems capable of satisfactory operation with low refrigerant vapor generator temperatures should be investigated further.

Development of such absorption systems should follow if further engineering and economic studies are favorable. Economic application of absorption systems does not appear possible in the immediate future, but the possible advantages,should low cost energy from solar sources or waste heat become available,are obvious.

At least two general approaches to the problem of absorption system development are possible. One approach, suggested by Daniels [10], involves research inthe area of other refrigerant/absorbent combinations to replace those used in conventional systems. The other approach consists of continued refinement and innovation of systems based on the ammonia/water combination along the lines suggested in References 5, 11, and 12.

EQUIPMENT MANUFACTURERS

Walk-In Coolers

Bally Case and Cooler, Inc.
Bally, Pennsylvania

A.H. Broman, Jr., Inc.
4226 N. Grace Street, Schiller Park, Illinois

Chase Cold Storage Door Company
630 Reading Road, Reading, Ohio

The Elliott-Williams Co.
3733 Sutherland Avenue, Indianapolis 1, Indiana

Esco Cabinet Company
West Chester, Pennsylvania

Federal Refrigerator Mfg. Co.
Belleville, Wisconsin

Fogel Refrigerator Company
5400 Eadom Street, Philadelphia 37, Pennsylvania

Friedrich Refrigerators, Inc.
PO Box 1540, San Antonio 6, Texas

Herrick Refrigerator Co.
1019 Commercial St., Waterloo, Iowa

C.V. Hill and Co., Inc.
360 Pennington Avenue, Trenton, New Jersey

Jordan Commercial Refrigerator Co.
2200 Kennedy Street, Philadelphia 37, Pennsylvania

Jack Langston Mfg. Co.
3700 Elm Street, Dallas 26, Texas

Masterfreeze Corporation
Sister Bay, Wisconsin

Nor-Lake, Inc.
2nd and Elm Streets, Hudson, Wisconsin

The Perlick Company, Inc.
3110W. Meinecke Avenue, Milwaukee 45, Wisconsin

Puffer-Hubbard Refrigerator Co.
Grand Haven, Michigan

The C. Schmidt Co.
John and Livingston Sts., Cincinnati 14, Ohio

Sterling Industries, Inc.
New Richmond, Wisconsin

Tyler Refrigerator Corp.
1401 Lake Street, Niles, Michigan

Uniflow Mfg. Company
Erie, Pennsylvania

Victor Products Corp.
901 Pope Avenue, Hagerstown, Maryland

The Warren Co., Inc
PO Box 1436, Atlanta 1, Georgia

Weber Showcase and Fixture Co., Inc.
PO Box 2018, Los Angeles 54, California

Vapor Compression Refrigeration

Bendix-Westinghouse Automative Air Brake Co.
950 E. Virginia St., Evansville 7, Indiana

Brunner Div., Dunham-Bush, Inc.
West Hartford 10, Connecticut

Carrier Corp.
302 S. Geddes St., Syracuse 1, New York

Copeland Refrigeration Corp
Sidney, Ohio

The Creamery Package Mfg. Co.
1243 W. Washington Blvd., Chicago 7, Illinois

Curtis Mfg. Co.
1905 Kienlen Avenue, St. Louis 33, Missouri

C.V. Hill & Co., Inc.
360 Pennington Avenue, Trenton 1, New Jersey

Kelvinator Div., American Motors Corp.
Detroit, Michigan

Lehigh Mfg. Co., Div. of Lehigh, Inc.
Easton, Pennsylvania

Tecumseh Products Co.
Tecumseh, Michigan

XL Refrigerating Co.
1834 W. 59th Street, Chicago 36, Illinois

York Corp.
York, Pennsylvania

Ice-Making Machines

Belt-Ice Corp.
3400 16th Avenue, W. Seattle 99, Washington

Carrier Corp.
302 S. Geddes St., Syracuse 1, New York

Chip Ice Corp.
1834-42 W. 59th Street, Chicago 36, Illinois

Flakice Corp.
360 Furmen Street, Brooklyn 2, New York

Frick Co.
Waynesboro, Pennsylvania

Frigidaire Division, General Motors Corp.
Dayton 1, Ohio

Vilter Mfg. Co.
2224 S. First Street, Milwaukee 7, Wisconsin

York Corp.
York, Pennsylvania

REFERENCES

1. "Use of Solar Energy for Cooling Purposes"
   H. Tabor, Solar Energy, Vol. 6, No. 4, 1962.

2. "Air Conditioning-Refrigerating Data Book, Refrigeration Applications"
   Vol. 1, No. 1, 1959, the American Society of Refrigerating Engineers.

3. "Methods of Preserving Food other than Fermenting, Freezing or Canning"
   F.C. Webb, Research Applied in Industry, Vol. XIII, No. 10 October 1960.

4. "A Report on the Utilization of Solar Energy for Refrigeration and Air Conditioning Applications"
   J.C. Kapur, Solar Energy, Vol. 4, No. 1, 1960.

5. "Absorption Cooling Unit with Fixed Conoidal Reflector"
   Teodoro Oniga, United Nations Conference on New Sources of Energy, 1961.

6. "Performance of an Intermittent Refrigerator Operated by a Flat Plate Collector"
   J.C.V. Chinnappa, Solar Energy, Vol. 6, No. 4, 1962.

7. "Heating, Ventilating, Air Conditioning Guide, 1960"
   Vol. 38, American Society of Heating, Refrigerating and Air Conditioning Engineers, Inc.

8. "How to Select Refrigeration Equipment"
   James F. Robertson. Petroleum Refiner, Vol. 38, No. 2, February 1959.

9. "Air Conditioning Refrigerating Data Book, Design Volume"
   Eighth Edition 1953-54. The American Society of Refrigerating Engineers.

10. "Introduction-Survey of Research Fields and Needs"
    Farrington Daniels. Proceedings-Symposium on Research Frontiers in Solar Energy Utilization. National Academy of Sciences. April 24, 1961. Reprinted by permission NAS in Solar Energy, special issue, September 1961.

11. "Engineering and Economic Study of the Use of Solar Energy Especially for Space Cooling in India and Pakistan."
    N.G. Ashar and A.R. Reti. United Nations Conference on New Sources of Energy, 1961. Paper E/Conf. 35/S/37.

12. "Cooling with Solar Energy"
    R. Chung and J.A. Duffies. United Nations Conference on New Sources of Energy, 1961, Paper E/Conf. S/82.