AGENCY FOR INTERNATIONAL DEVELOPMENT
WASHINGTON, D. C. 20523

BIBLIOGRAPHIC INPUT SHEET

FOR AID USE ONLY
Batch 37

1. SUBJECT CLASSIFICATION

A. PRIMARY
Agriculture — AN10-0000-0000

B. SECONDARY
Agricultural engineering and structures

2. TITLE AND SUBTITLE
A multipurpose processing plant for rice, corn, and bean seed

3. AUTHOR(S)
Gregg,B.R.; Dougherty,G.M.

4. DOCUMENT DATE	5. NUMBER OF PAGES	6. ARC NUMBER
1966	25p.	ARC

7. REFERENCE ORGANIZATION NAME AND ADDRESS
Miss.State

8. SUPPLEMENTARY NOTES *(Sponsoring Organization, Publishers, Availability)*

9. ABSTRACT

10. CONTROL NUMBER
PN-AAC-228

11. PRICE OF DOCUMENT

12. DESCRIPTORS
Beans
Maize
Materials handling
Rice
Seed production

13. PROJECT NUMBER

14. CONTRACT NUMBER
AID/W-607-GTS

15. TYPE OF DOCUMENT

AID 590-1 (4-74)

B. R. Gregg
G. M. Dougherty
AID/W-607 G-7
PN-AAC-228

A MULTIPURPOSE PROCESSING PLANT FOR RICE, CORN, AND BEAN SEED

Services Rendered Under the Agreement Between AID/W and MSU AID-W-607

December, 1966

THE SEED TECHNOLOGY LABORATORY
Mississippi Agricultural Experiment Station
Mississippi State University
State College, Mississippi

A MULTIPURPOSE PROCESSING PLANT FOR RICE, CORN, AND BEAN SEED

Designed and Prepared
By
B. R. Gregg
And
G. M. Dougherty

THE SEED TECHNOLOGY LABORATORY
Mississippi Agricultural Experiment Station
Mississippi State University
State College, Mississippi

A MULTIPURPOSE PROCESSING PLANT FOR RICE, CORN, AND BEAN SEED

INTRODUCTION

The gravest problem facing the world's burgeoning population is a critical shortage of food. Today's food production levels cannot prevent mass starvation and suffering, and the American farmer's vaunted productivity cannot feed the world's population. Developing countries must learn, both for economic development and as a matter of survival, to produce the greater part of their food needs.

Many conditions must be altered and improved before adequate food supplies can be produced. No factor, however, is more important than securing maximum efficiency and productivity, especially in developing nations where production inputs are scarce and expensive.

Good seed are the basic tool for increasing food production efficiency levels. Yet, the use of improved seed requires no change in local crop production technology as do other improved practices such as fertilizers, insecticides, and herbicides. Good seed are the farmer's only means of selecting better-adapted varieties with higher yield potentials. Tests in underdeveloped tropical areas have shown significant yield increases, often over 50% greater than yields from unimproved local varieties, from the use of improved seed alone.

The present world seed industry cannot supply all the improved seeds needed by developing nations, even if these nations could purchase them. Improved seed in the quantities needed can be supplied only by seed production in the consuming areas. Local seed production could make available the needed seed supplies with minimum transportation and storage costs, and without using often scarce foreign exchange.

Producing adequate seed supplies locally requires more than production fields; proper drying, processing and storage facilities are essential. These facilities must be designed for economical construction and efficient operation, and with room for expansion as the seed improvement program gains momentum. As the first step toward supplying the data needed to construct and operate basic seed handling facilities in developing nations, the Mississippi Seed Technology Laboratory has prepared plans for the multipurpose seed processing plant described here. It can be used in any area; since the most pressing needs are for food crop seeds, it is designed primarily for complete processing of improved seeds of rice, corn and beans.

GENERAL SPECIFICATIONS

This processing plant is designed to satisfy the following requirements:

A. A minimum investment in equipment.

B. Relatively simple flow lines, so that it can be operated and supervised by personnel with minimum training.

C. Handle either bulk or bagged seed, with room to receive and handle bagged seed.

D. Operating capacity high enough to be economical, but low enough to allow efficient processing of seed received in bags, and bagging-off of clean seed by unskilled workers.

E. Machinery of matched and balanced capacity, to reduce size of equalizing bins required.

F. Flexible enough to allow bypassing any machine, or to introduce seed into the cleaning operation at any point.

G. Require a minimum of time and labor in the flow of the seed, so that labor can be concentrated on receiving and bagging operations.

H. To process and grade corn seed into 4 grades; and also to process rice, other small grains, and beans.

I. To allow processing of other seed crops with a minimum of expense and alteration.

J. Treating-bagging operation that will (1) tie into continuous-flow processing; (2) receive precleaned seed; or (3) allow bagging without treating when desired.

K. Remove dust, screenings, and other waste products with a minimum of handling

L. Keep seed damage at minimum levels.

M. Be relatively easy to clean out between lots

PROCESSING EQUIPMENT

1. Corn Sheller

Western, Triumph, or equivalent. Approximately 10-HP motor, with 20-40 tons per hour capacity.

2. Air-screen Cleaner

Either of the following:

A. Clipper Super X-298-D

4 screens, 54" x 60", 10-HP motor, 2 air separations.

Rated capacities in bushels per hour: seeds 85-100
grain 125-250
beans 275-450

B. Crippen H-454

4 scre[illegible] 54" x 44", 7 1/2-HP motor, 2 air separations.

Rated [illegible]acities in bushels per hour: seeds 100-150
grain 125-250
beans 250-450

3. Length Separators

Two disk separators mounted in series for extra capacity and complete separation.

A. Carter 2527

3-HP motor; 27 disks, 25 inches in diameter. "J" disks, "A" disks.

Input capacity of 140 bushels per hour.

B. Carter 2523

3-HP motor; 23 disks, 25 inches in diameter. "J" disks, "A" disks. Input capacity of 120 bushels per hour. Combined capacity is rated equal to that of the Clipper Super X-298-D or Crippen H-454.

4. Gravity Separator

Oliver No. 80; 36" x 72" rectangular deck; 5-HP motor.

Capacity: small seed 2400 pounds per hour
large seed 5000 pounds per hour

5. Corn Graders

A. Splitter

Carter No. 2 precision grader, with conveyor to return "thrus" to feed end of machine; 1/2-HP motor. 2 grader shells 62" long. Estimated capacity, 100 bushels per hour.

B. Flat Grades

Carter No. 2 precision grader, with conveyor to discharge "thrus" at discharge end of machine; 1/2-HP motor. 2 grader shells 62" long.

C. Round Grades

Carter No. 2 precision grader, with conveyor to discharge "thrus" at discharge end of machine.

2 grader shells 62" long. 1/2-HP motor.

6. Treater

Gustafson M-400-TT Mistomatic Triple-Treat with film-coating chamber

1/4 and 3/4-HP motors. Capacity 400 bushels per hour.

7. Bagger

Richardson G-17 semi-automatic bagging scale. Bag holder, adjustable flow control, fills 4-6 100-pound bags per minute, over-under indicator, automatic cut-off, will fill 25-140-pound bags constructed of any material.

8. Bag Sewing Machine

Fischbein portable bag closer with suspension unit. Approximate time required to close a 100-pound bag is 6 seconds.

ELEVATORS

The receiving hopper pits of elevators feeding (1) the air-screen cleaner, (2) the 3-way valve feeding separating machinery, (3) the treater, (4) the sacking bin, and (5) taking graded corn to the gravity or treater, are mounted in the floor so that the top of the hopper is at floor level. With this installation, receiving bulk seed, seed spouted from the previous machine, or bagged seed is easy. The hopper pits (to be fabricated locally) have ample capacity and adequate working space around them to allow several workers to dump bags at the same time.

These hoppers will be built of 12-gage sheet steel, and installed in concrete pits sunk into the floor during construction of the building. Concrete surrounding the pits will have adequate moisture barriers. A trap door at floor level can be lifted up so that a worker can enter the pit to

clean out elevator boots.

These elevators will be mounted one foot above the pit floor on an angle-iron frame to facilitate clean-out.

The elevators feeding the two precision graders making final corn grades are mounted above floor level.

Suggested elevator sizes and models are:

A. Elevators feeding air-screen machine, and feeding 3-way valve to separating machines, are both Mitchell single-bucket continuous-bucket elevators with 8-inch buckets. This elevator is self-cleaning, and does comparatively little damage to fragile seeds. Capacity is 450 bushels (60-pound bushels) per hour. 1 1/2-HP motor each.

B. Elevators feeding the two Carter #2 precision graders making final corn grades are Universal B-2 "Easy-dump" bucket elevators. Belt speed of 75 feet per minute reduces seed damage. Capacity is 75 bushels (60-pound bushels) per hour. 1/3-HP motor each.

C. Elevators (a) receiving graded corn from conveyor, (b) feeding treater bin, and (c) feeding sacking bin are Universal C-2 "Easy-dump" bucket elevators. Belt speed 110 feet per minute. Capacity 175 bushels per hour. 1/3-HP motor each.

CONVEYORS

1. Belt or drag conveyor bringing ear corn from dryers to sheller. Seedburo

model HIOBF or equivalent.

2. Shoe-driven shaker conveyor delivering seed from air-screen cleaner to elevator. This conveyor will be fabricated locally from plans supplied by Mississippi State University.

3. 14-foot floor-mounted vibrating conveyor beneath the 4 graded-corn bins. This is a self-cleaning, eccentric-driven Clipper vibrating conveyor with a trough 12" wide and 5" deep. Maximum capacity 1100 bushels per hour. 3/4-HP motor.

4. Belt or drag conveyor carrying cobs from the sheller to a trailer or dump outside the building. Seedburo Cardinal Elevator equivalent.

BINS

All bins are of 10-14 gage sheet steel, fabricated locally from plans and specifications prepared by the Mississippi State University Seed Technology Laboratory. A total of 10 small garner bins are required.

MOUNTING FRAMES

All machines except the gravity separator are mounted on above-floor frames, to satisfy the following requirements:

A. allow height for simple gravity flow of seeds.

B. allow easy handling of waste products such as screenings or tailings.

C. allow easy clean-up between lots, and to improve general

sanitation level.

Machine mounting frames may be built of any desired material such as steel, wood, concrete, or concrete blocks. However, structural steel is preferred, and plans and specifications for structural steel frames will be supplied by the MSU Seed Technology Laboratory.

CLEANING SEQUENCES FOR DIFFERENT SEEDS

A. Corn

Ear corn enters the processing plant from the bulk ear corn dryers on a belt-type conveyor. This conveyor also serves as a picking belt. Stationing workers along either side of the section of the conveyor inside the processing building provides a means of removing off-type seed stocks prior to shelling.

From this conveyor, the ear corn goes into the corn sheller. Cobs from the sheller are deposited on a conveyor that discharges them into a wagon or truck parked outside the building near the dust collector which receives dust from the corn sheller.

Shelled corn flows by gravity from the sheller into the floor level hopper feeding the elevator which discharges into the air-screen machine. NOTE: Preshelled corn in bulk or bags can be introduced into the cleaning line at this point.

For maximum efficiency, the 4-screen, 2 air-system air-screen cleaner is set so that its screens remove all undesirable large material and all kernels below acceptable size for the smaller grades. Properly adjusted, this

cleaner should normally remove nearly all undesirable materials, including undesirable kernels. A close size-grading would then be the only further processing needed.

A shoe-driven vibrator conveyor receives cleaned corn from beneath the air-screen cleaner and delivers it to a pipe down which seed flows by gravity into a floor-level hopper. NOTE: Pre-cleaned bagged corn requiring further grading, or corn for grading, pre-cleaned at other plants, can be introduced into the processing line at this point.

This floor level-hopper feeds an elevator which discharges into a standard 3-way valve. When corn is cleaned and graded, this valve is moved to the right. Cleaned corn from the elevator then flows into a garner bin serving a Carter No. 2 precision grader which acts as a splitter.[1] Kernels that drop through the perforated slotted shell (flats) are gravity fed into an elevator which carries them up to another Carter No. 2 precision grader for further grading. Likewise, kernels riding over the splitter shell (rounds) are gravity-fed into a separate elevator which carries them to a third Carter No. 2 precision grader for further grading.

The second precision grader separates the corn received from the splitter unit into two grades of flat kernels, i.e., medium flats and round flats. The third precision grader produces two grades of round kernels, i.e., medium rounds and large rounds.

---

[1]A splitter grader is used to separate flat kernels from round kernels.

The following screen and grader sizes are shown as an example of the flow in this system. Actual screen and grader-shell sizes would depend on the corn being graded.

1. Air-screen machine: A 24-R scalping screen removes all oversize material, while an 18-R bottom grading screen removes all undersize material. Kernels between 18/64 and 24/64 in width would be sent to the precision grader serving as a splitter.
2. Splitter precision grader: Slotted grader shells of approximately 12 to 13.5/64 in this unit separate flat kernels from round kernels, and send them to separate precision graders for final grading.
3. Flat grade precision grader: Kernels dropping through the slots in the splitter unit in (2) above would feed into this unit. A round-hole shell of approximately 20 to 22/64 would separate "large flat" from "medium flat" kernels and discharge them separately into the graded corn bins.
4. Round grade precision grader: Kernels riding over the slots in the splitter unit in (2) above would feed into this unit. A round hole, again approximately 20 to 22/64 in diameter, would separate "large round" from "medium round" kernels and discharge them separately into the graded corn bins.

These units make 4 basic grades with a minimum of equipment. If

further width or thickness grading is desired, additional grading equipment can be added in the working area to the right of these machines. Or these grades can be accumulated and rerun through the present machines after the grader shells have been changed. Length graders can also be added in the working area when needed.

After separation, each grade of corn flows by gravity into a separate holding bin. These bins are mounted in a row to the right of the graders. A single vibrating conveyor mounted on the floor beneath the bins can receive corn from any bin and deliver it to the floor-level hopper of an elevator located at the end of the row of bins

If necessary, graded corn can be sacked from a spout beneath these graded-corn bins. This will permit either accumulating large volumes of each grade before treating, or carrying the bagged corn back to the elevator feeding the graders for further grading.

Capacity of each of these 4 graded-corn bins is approximately 80 bushels. The length of processing time they will hold the graded corn can be computed as shown in the following example:

(a) Total grading capacity will be determined by the grader used to split the corn seed into "flats" and "rounds". Capacity of this machine is approximately 100 bushels per hour. 50% of this corn (50 bushels per hour) will probably fall into one of the four final grades, i.e., Medium flat.*

*Used for illustrative purposes.

(b) Proper setting of the grader shells, and positioning of the graders, will permit feeding this primary grade, i.e., medium flats, directly into the floor-level hopper located at the end of the row of bins, or into the vibrating conveyor for discharge into the floor-level hopper. This leaves the 4 graded-corn bins for storage of the 3 remaining grades.

(c) The 3 remaining grades constitute a flow of 50 bushels per hour. Approximately 30 bushels per hour will be in one other grade, i.e., medium round*. Bypassing the bins with the primary grade leaves two bins with a total capacity of 160 bushels to hold this second grade. 160 bushels at 30 bushels per hour gives 5 hours processing time before bagging or treating of this grade is necessary.

(d) The remaining 20 bushels per hour will probably divide more or less evenly between the remaining two grades, i.e., large flats and large rounds. Thus, feeding 10 bushels per hour of each of these two grades into its separate 80-bushel bin will give 8 hours processing time before bagging or treating either of these grades is necessary.

Grading sleeves and spouting should be set up so that the grade making up the greatest volume of the seed will discharge from the third (13)

* Used for illustrative purposes.

precision grader (See drawing). This can be spouted directly into the floor-level elevator hopper, located at the discharge end of the vibrating conveyor which runs beneath the 4 graded-corn bins.

The grades spouted into the graded-corn bins can be held in the bins until they are bagged or treated. After handling of the major grade, these grades can be dropped, one grade at a time, into the vibrating conveyor running beneath the bins. This conveyor delivers the corn into an elevator hopper mounted at floor level at the end of the row of bins.

This elevator delivers the graded corn to a two-way valve. If gravity separation is needed, the corn can be spouted into the bin feeding the gravity separator. When no gravity cleaning is necessary, the gravity separator can be by-passed.

At this stage, the corn is delivered into the floor-level hopper of an elevator feeding the bin over the treater. Pre-graded corn in bags can also be fed in here.

After passing through the treater, corn feeds directly into the floor-level hopper of the elevator feeding the sacking bin. Bagged corn can also be fed in here. Also, when treating is not desired, corn from either the gravity separator or the elevator from the graded-corn bins can by-pass the treater and go directly into the bagging bin. This is done simply by lifting the feed spout away from the "treat" floor-level elevator hopper and placing it over the adjacent "bag" floor-level elevator hopper.

The semi-automatic bagging scale is mounted directly onto the dis-

charge orifice of the bagging bin. To sack seed, a worker places a bag in the clamp of the scale, and pulls the seed lever. As soon as the predetermined weight is in the bag, seed flow is automatically stopped. The worker then removes the bag and sews up the bag opening.

Bags can then be delivered by hand truck into the storage units, or carried directly out the adjacent door onto the loading dock and into trucks for delivery to other locations.

B. Rice and other small grains

Bagged rough rice or other small grains brought from the sack dryer or the loading dock is stacked in the rough-seed work area. Bags are then emptied into the floor-level hopper of the elevator feeding the garner bin serving the air-screen machine.

If bulk receiving facilities are needed, they can be installed outside in front of the processing building. Bulk seed can then be either fed by conveyor into the floor level-hopper of this elevator, or lifted by the elevator of the receiving facility and fed into the garner bin over the air-screen machine.

After cleaning on the air-screen machine, the rice passes into the shoe-driven vibrating conveyor and into the floor hopper feeding the elevator discharging into the 3-way valve. Here the seed are spouted into a garner bin feeding the length separator. The length separator is a Simon-Carter 2527 disk separator and a Simon-Carter 2523 disk separator mounted in series to make a complete length separation at a capacity approximately

equal to the capacity of the air-screen machine.

From the disk separator, the cleaned rice feeds by gravity down a pipe into the floor-level hopper of the elevator feeding the bin over the treater. The seed pass through the treater and its mixing auger, and feed directly into the floor-level hopper of the elevator feeding the sacking bin.

When necessary, treating can be by-passed simply by moving the clean seed pipe (bringing seed from the disk separator) from the treater elevator's hopper to the bagger elevator's hopper.

Seed are weighed into bags by the semi-automatic bagging scale, and bags are closed with the bag-sewing machine. Filled bags can be carried into the adjoining storage rooms, or carried directly out a door to a loading dock a few feet from the bagging station.

C. Beans

Beans, cowpeas, soybeans, and similar seed can also be received in bulk or in bags. The seed is fed into the floor-level hopper of the first elevator, which carries it into the garner bin over the air-screen machine. If unusually dirty mechanically-harvested seed is to be cleaned, a scalper can be moved in to scalp seed before it goes into this elevator hopper.

After cleaning on the air-screen machine, the seed passes into the shoe-driven vibrator conveyor and into the floor-level hopper feeding the elevator discharging into a 3-way valve. The seed flow down the center spout toward the gravity separator.

A two-way valve installed in this pipe sends the seed into the garner bin over the gravity separator when gravity cleaning is needed. If this is not necessary, the 2-way valve allows by-passing the gravity separator.

After cleaning over the gravity separator, the seed flow by gravity into the floor-level hopper of the elevator feeding the treater bin. After going through the treater, the seed flow directly into the floor-level hopper of the elevator feeding the garner bin serving the semi-automatic bagging scale.

When seed are not to be treated, the pipe bringing seed from the gravity separator or 2-way valve can be moved to by-pass the treater and feed seed directly into the hopper of the elevator serving the bagger.

Bagged seed can be carried directly into storage or onto the adjacent loading dock for delivery to growers or to warehouses at other locations.

D. Other seeds

Any seeds requiring the following cleaning sequence can be handled:

(1) air-screen cleaner only

(2) air-screen cleaner and treater

(3) air-screen cleaner and disk separator with small-grain size disk pockets

(4) air-screen cleaner and gravity separator

(5) air-screen cleaner and precision graders

Seeds such as small grass or legume seed can be processed simply by adding an additional machine in the open floor space adjoining the gravity separator. Seed can be conveyed from the gravity separator into the elevator receiving seed from the graded corn bins and elevated to the added machine. From this machine seed could then be conveyed to the treating or sacking bin elevator.

This arrangement would require only a semi-portable bin and an additional conveyor to serve added machines. This would give flow sequences of:

(6) clovers - air-screen cleaner to gravity separator to roll mill or magnetic separator to bagger.

(7) small grasses - air-screen cleaner to gravity separator to grass disk or cylinder separator to treater to bagger.

As an alternate method for seed which does not require treating, the treater can be rolled out from under the treating bin, and a separating machine rolled into position to use this elevator and bin.

PROCESSING CAPACITY

Capacity of any processing operation depends on several factors, including the rate and method of feeding seed into the line, amount of material to be removed, separation accuracy desired, and the type of separation to be made. Capacity can be considerably more or less than an average for any particular lot. However, the following capacities are the average

operating capacities to be expected from this processing plant under normal conditions.

A. Rice

Using the air-screen machine, disk separators and treater, 100-150 60-pound bushels of seed rice per hour can be efficiently cleaned.

B. Corn

Corn can be cleaned and graded at rates up to 100 60-pound bushels of graded corn per hour. This amount is finished corn; a higher capacity would be fed into the shelling and cleaning operations to compensate for the volume of the waste products.

C. Beans

Cleaning with the air-screen machine only, up to 250 bushels of seed beans could be cleaned per hour. However, capacity would be approximately 90-100 60-pound bushels per hour when the gravity separator is used to remove dirt or damaged beans.

LEGEND

1 PICKING -CONVEYING BELT
2 CONVEYOR TO SHELLER
3 CORN SHELLER
4 FLOOR-LEVEL ELEVATOR FEED HOPPERS
5 MITCHELL-TYPE ELEVATOR TO AIR-SCREEN CLEANER
6 AIR-SCREEN CLEANER
7 MITCHELL-TYPE ELEVATOR TO 3-WAY VALVE
8 GARNER BINS
9 3-WAY VALVE
10 DISC SEPARATORS
11 GRAVITY SEPARATOR
12 SPLITTER PRECISION GRADER
13 PRECISION GRADER (FLAT GRADES)
14 PRECISION GRADER (ROUND GRADES)
15 BINS FOR GRADED CORN
16 VIBRATOR CONVEYOR
17 BUCKET-BELT ELEVATORS
18 TREATING BIN
19 TREATER
20 SACKING BIN
21 SACKING SCALE
22 COB CONVEYOR
23 DUST DUCTING
24 DUST COLLECTORS

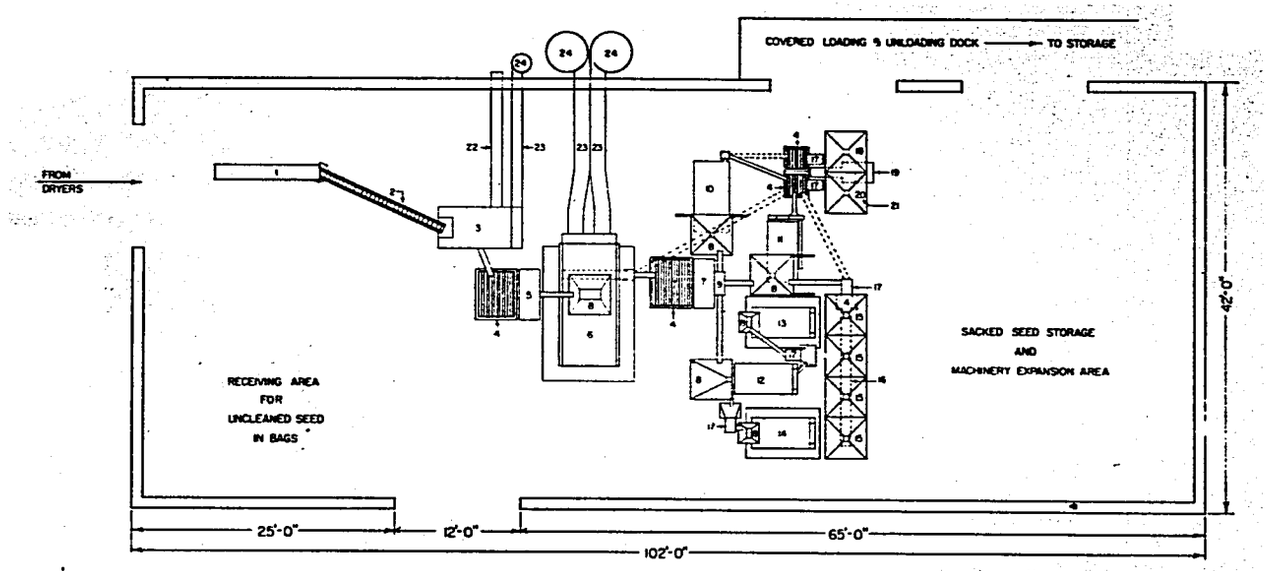

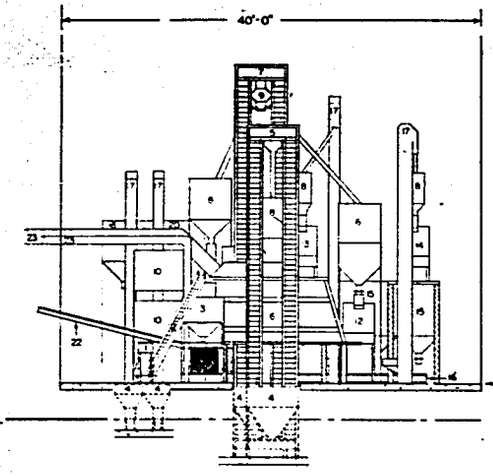

END VIEW

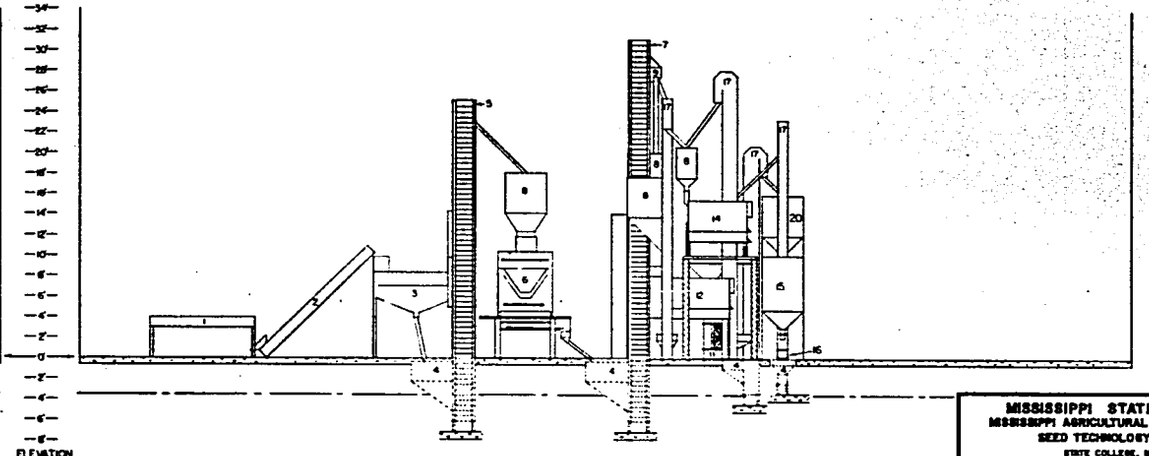

SIDE VIEW

SCALE 3/16" = 1'-0"

MISSISSIPPI STATE UNIVERSITY
MISSISSIPPI AGRICULTURAL EXPERIMENT STATION
SEED TECHNOLOGY LABORATORY
STATE COLLEGE, MISSISSIPPI

FLOOR PLAN AND ELEVATIONS FOR
MULTIPURPOSE SEED PROCESSING PLANT

DESIGNED BY: BRG & GMD	DATE: JANUARY, 1967	SHEET
DRAWN BY: GMD		OF
APPROVED BY: JCD	FILE NO.	

DRYING AND STORAGE FACILITIES

A complete seed improvement program requires coordination of production, drying, processing, storage, and distribution of seed. It balances program emphasis and physical facilities in all phases for efficient delivery of seed to the users with minimum lost motion and wasted seed.

Processing, drying, and storage are closely related activities. Although they can be built in separate locations or in the same location at different times, facilities for these phases of a seed program are usually combined in the same plant under the same management. Therefore, a seed processing plant should be designed so that processing can be coordinated with the drying and storage facilities needed to precondition and preserve the seed, whether they are built at the same time or later.

This multipurpose processing plant has been designed to incorporate drying and storage facilities needed in areas of high temperature and humidity. The purpose of this publication is to describe a complete and efficient processing plant. Full description and specifications of the related drying and storage facilities will be covered in a later publication.

The following drawings indicate how this processing plant can be incorporated into a complete drying, processing, and storage operation. More complete information on these drying and storage facilities can be obtained from the Mississippi Seed Technology Laboratory.

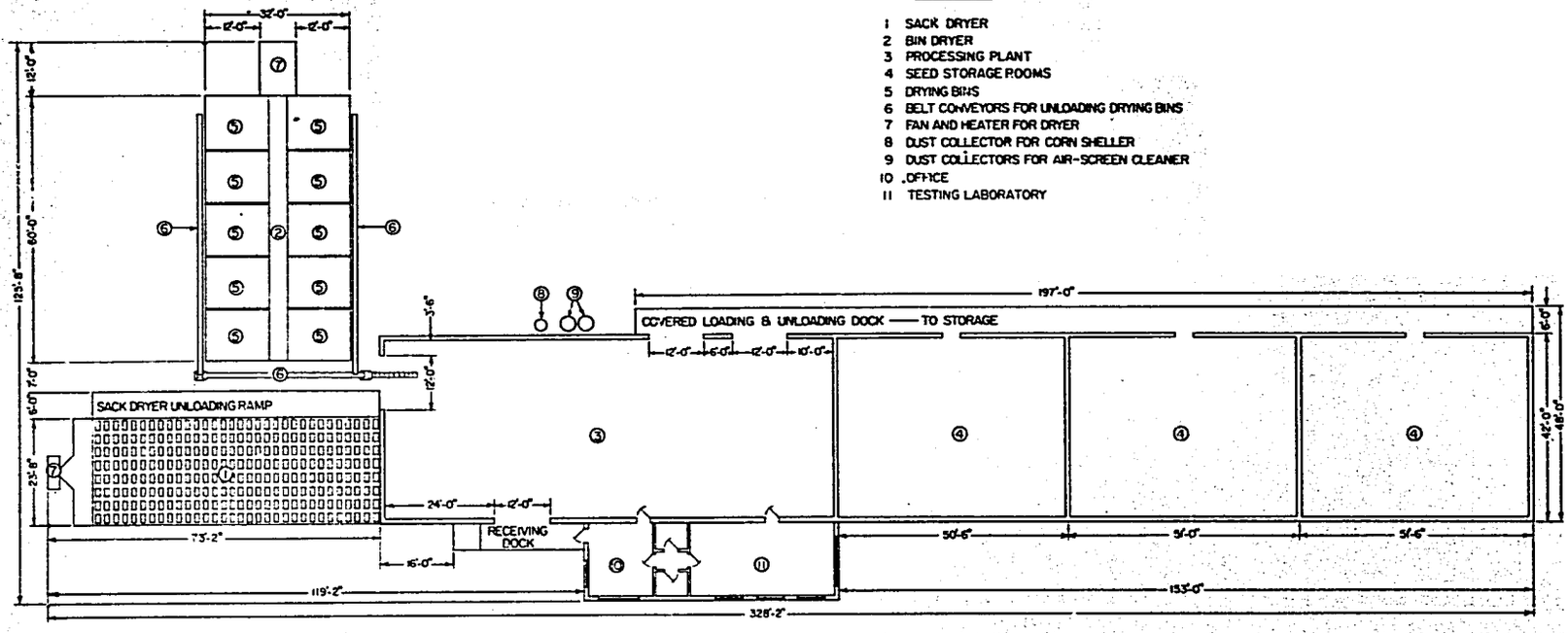

LEGEND

1 SACK DRYER
2 BIN DRYER
3 PROCESSING PLANT
4 SEED STORAGE ROOMS
5 DRYING BINS
6 BELT CONVEYORS FOR UNLOADING DRYING BINS
7 FAN AND HEATER FOR DRYER
8 DUST COLLECTOR FOR CORN SHELLER
9 DUST COLLECTORS FOR AIR-SCREEN CLEANER
10 OFFICE
11 TESTING LABORATORY

FUTURE EXPANSION
BULK
RECEIVING
&
STORAGE

SCALE 1/12" = 1'-0"

MISSISSIPPI STATE UNIVERSITY
MISSISSIPPI AGRICULTURAL EXPERIMENT STATION
SEED TECHNOLOGY LABORATORY
STATE COLLEGE, MISSISSIPPI

DRYING, PROCESSING & STORAGE LAYOUT
FOR
MULTIPURPOSE SEED PROCESSING PLANT

DESIGNED BY: BRG & GMD	DATE: JANUARY, 1967	SHEET
DRAWN BY: GMD		OF
APPROVED BY: JCD	FILE NO.	

LEGEND

1. SEED STORAGE WAREHOUSE
2. PROCESSING PLANT
3. OFFICE AND TESTING LABORATORY
4. BIN DRYER
5. SACK DRYER

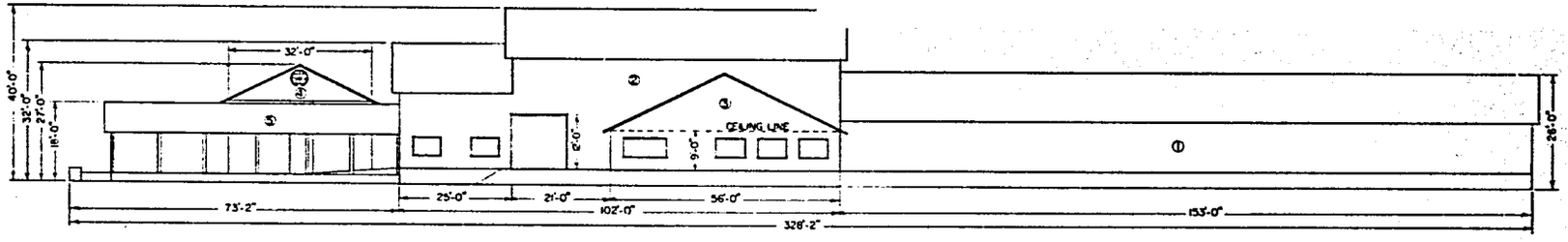

FRONT VIEW

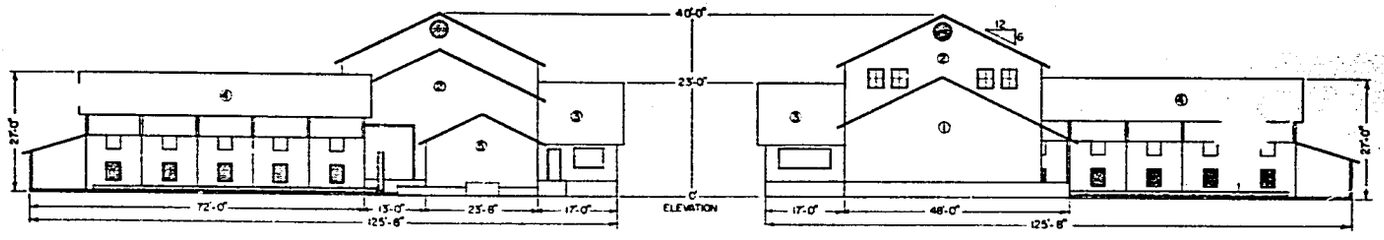

DRYER END VIEW

STORAGE END VIEW

SCALE 1/12" = 1'-0"

MISSISSIPPI STATE UNIVERSITY
MISSISSIPPI AGRICULTURAL EXPERIMENT STATION
SEED TECHNOLOGY LABORATORY
STATE COLLEGE, MISSISSIPPI

STORAGE, PROCESSING, OFFICE-LAB., DRYER BUILDINGS
FOR
MULTIPURPOSE SEED PROCESSING PLANT

DESIGNED BY: BRG & GMD	DATE: JANUARY, 1967	SHEET
DR. JN BY: GMD		OF
APPROVED BY: JCD	FILE NO.	