AGENCY FOR INTERNATIONAL DEVELOPMENT
WASHINGTON, D. C. 20523

BIBLIOGRAPHIC INPUT SHEET

FOR AID USE ONLY

1. SUBJECT CLASSIFICATION

A. PRIMARY
Agriculture

B. SECONDARY
Farm mechanization

2. TITLE AND SUBTITLE
Rice machinery development and mechanization research; semi-annual progress report No 21, July-December, 1975

3. AUTHOR(S)
International Rice Research Institute (IRRI)

4. DOCUMENT DATE	5. NUMBER OF PAGES	6. ARC NUMBER
1976	66 p	ARC

7. REFERENCE ORGANIZATION NAME AND ADDRESS
International Rice Research Institute, P.O. Box 933, Manila, Philippines

8. SUPPLEMENTARY NOTES (Sponsoring Organization, Publishers, Availability)
(Research summary) Copies available upon request at above address. A copy of a bibliography listing other departmental publications is also available.

9. ABSTRACT

Accomplishments during the year reported include: development of a low-cost gravity fed, manually pushed applicator for injecting water solutions of fertilizer and insecticides into the plant root zone in puddled fields; development of a manually operated rubber diaphram pump which can lift 190-200 liters/min. at 1 m head; continuation of work on the development of a 17 hp. four-wheel tractor utilizing a lightweight, air-cooled diesel engine and standard automotive transmission components; investigation of major revisions of the axial flow thresher to improve cleaning performance and reduce production costs; continuation of a study of the effects on depth of hard pan with different land fillage systems in wetland fields; a study of the power tiller industry; continuation of the evaluation of the economic and technical characteristics of rice milling units and farm-level post-production systems; and a new USAID/IRRI Industrial Extension Contract, focusing on extending IRRI machinery design to manufacturers worldwide.

10. CONTROL NUMBER
PN-AAC-182

11. PRICE OF DOCUMENT

12. DESCRIPTORS
Agricultural technology
Intermediate technology
Rice

13. PROJECT NUMBER

14. CONTRACT NUMBER
AID/ta-G-1074 GTS

15. TYPE OF DOCUMENT

AID 590-1 (4-74)

Semiannual Progress Report No. 21
July 1 - December 31, 1975

RICE MACHINERY DEVELOPMENT AND MECHANIZATION RESEARCH

AMIR U. KHAN
Agricultural Engineer & Project Leader

BART DUFF
Associate Agricultural Economist

DONALD O. KUETHER
Associate Agricultural Engineer

JOHN A. McMENNAMY
Associate Agricultural Engineer

AGRICULTURAL ENGINEERING DEPARTMENT
THE INTERNATIONAL RICE RESEARCH INSTITUTE
P.O. BOX 933 MANILA PHILIPPINES

THE IRRI RICE EQUIPMENT DEVELOPMENT PROGRAM

The objective of the equipment development program is to increase the income and welfare of small rice farmers. Use of improved mechanical technologies contribute directly to this goal by increasing production through a) increased yields, b) removal of resource constraints, c) reductions in field and post-production losses, d) increased cropping intensity, and e) improvements in the quality and value of agricultural products. Appropriate machines can also reduce production costs -- a direct benefit to the rice consumer. Mechanization based on local production reduces foreign exchange costs, creates expanded opportunities in rural based industries, strengthens backward linkages between agriculture and other sectors of the economy and enhances training opportunities in small-scale manufacturing.

In developing machines to meet these objectives, two major conditions must be met. First, designs must be compatible with the technical and economic needs of small farmers who will use them. Secondly, the manufacture and servicing of the machines must be within the technical capabilities of indigenous small and medium-scale machine shops. IRRI provides design information and limited technical support free of cost to qualified commercial manufacturers.

The main research and development effort is centered at the International Rice Research Institute in the Philippines with national liaison links throughout Asia, Latin America, and Africa. Reports describing program activities are issued semi-annually. Copies of these reports and a bibliography listing other departmental publications are available upon request.

For additional details write to:

Department of Agricultural Engineering
International Rice Research Institute
P. O. Box 933, Manila, Philippines

TABLE OF CONTENTS

Title	Page
Introduction and Summary	1
Design and Development	4
Field machinery	
Steering clutches for 5-7 hp tiller	4
Small 4-wheel riding tractor	5
Liquid injector for lowland rice	6
Tubular pump	8
Vertical axis windmill	9
Windmill-pump combination	10
Diaphragm pump	11
Axial flow thresher with oscillating conveyor	12
PTO thresher	13
Self-propelled cart with thresher	13
Small oscillating grain cleaner	14
Drying and processing	
Parboiling machine	15
Engleberg rice mill	16
Solar heat collector	17
Factors affecting the efficiency of rice whitening machines	17
Mechanization Research	19
Compacted soil studies	19
Large oscillating grain cleaner	19
Diaphragm pump test	20
Batch dryer burner tests	20
Twin-bed batch dryer	21
Engineering training course	22
Dryer operator's manual	22
Mechanization Systems	22
Sequential farming analysis	22
Assembly of rice production-processing data	23
Metals industry study	23
Production and marketing of hand tractors in the Philippines	24
Potential of mechanizing upland cropping operations	24
Mill level post-production systems in Central Luzon, 1973-74	25
Post-production system pilot trials	28
Industrial Extension	28
Personnel List	31
Tables	
Figures	

Summary and Introduction

A low-cost gravity fed, manually pushed applicator for injecting water solutions of fertilizer and insecticides into the plant root zone in puddled fields was developed. The machine opens small furrows, deposits the chemical solution 6 cm below the soil surface, and closes the furrow, thus imbedding the chemical. IRRI Agronomy and Entomology department studies indicate a chemical saving of approximately 50 percent by root zone application. The machine is quite simple and can be easily produced by small shops in most developing countries.

A manually operated rubber diaphragm pump which can lift 190-200 liters/min at 1 m head was developed. This pump is a replacement for the bellows pump which encountered service problems with the canvas bellows. This pump is simpler to fabricate and uses diaphragms made from old automotive inner tubes that are readily available in most countries.

Work on the development of a 17-hp, four-wheel tractor that utilizes a lightweight aircooled diesel engine and standard automotive transmission components, continues. Special emphasis has been placed on selecting readily available components to facilitate local production in most developing countries. The prototype tractor is now approaching completion and a range of implements are being designed for wetland use.

A number of major revisions of the axial flow thresher were investigated to improve cleaning performance and reduce production costs. A new axial flow thresher design replaces the rotary screen, auger, and collecting boards with a simple oscillating conveyor-screen. This machine can thresh a wider variety of crops because provisions have been made to adjust the crop retention time in the threshing drum. The machine is lighter, easier to fabricate, and is expected to cost less than the earlier axial flow thresher. A self-propelled motorized cart which can be used either for transporting and powering the axial flow thresher or as a low-cost transport vehicle for rural areas was developed.

Study on the effects on depth of hard pan with different land tillage systems in wetland fields was continued over the fourth continuous cropping season. The compacted layer continues to deepen at a faster rate with four-wheel tractors as compared to the other three systems used in the study.

Thirteen trainees completed the two-week engineering course, which is now being offered as a regular course every six months.

The Mechanization Systems Section focused attention on the examination and development of operating and ownership systems within which small-scale mechanization can be introduced and used effectively and profitably over a wide range of farm sizes. Work is also underway to assemble and classify the relevant technical information describing the performance of alternative techniques for all operations in the rice production and post-production system.

A study of the power tiller industry in the Philippines indicates a rated manufacturing capacity of nearly 3,000 units per month in the country of which 35 percent is presently utilized. Capacity utilization has increased by approximately 20 percent over 1974 and more significantly, there has been a two-fold increase in the manufacturing capacity serving the industry during the year.

Work continued on the evaluation of the economic and technical characteristics of rice milling units and farm-level post-production systems. The current report summarizes the range of equipment and nature of practices found in a sample survey of 180 rice mills in the Philippines. During the period covered by this report, a series of farm-level pilot trials were initiated to test the relative efficiency of a range of alternative techniques and combinations of techniques for handling, threshing, and drying. Particular attention is being given to an assessment of the qualitative and quantitative losses which occur in these systems as well as their costs.

Industrial extension efforts in the past have been concentrated in the Philippines, with the effect of steadily increased production of IRRI-designed machines. More encouraging than the increased production of IRRI machines per se is the catalytic effort of the program as evidenced by the growth of the small-scale farm machinery industry in the Philippines. For example, when the IRRI-designed 5- to 7-hp power tiller was introduced in 1972, only about 200 power tillers were being locally manufactured per year. In 1975, 7,886 power tillers were produced locally.

A new USAID/IRRI Industrial Extension Contract became effective June 30, 1975 and it will focus on extending IRRI machinery design to manufacturers worldwide. Mr. John A. McMennamy joined the program as Associate Agricultural Engineer and will have responsibility for backstopping the industrial extension efforts of teams located in Pakistan, Thailand, and the Philippines. These teams are being staffed and should become operational during the first half of 1976. Dr. Khan will be transferring to Pakistan during the second quarter of 1976 to direct the industrial extension program there.

The Technical Advisory Committee of the Consultative Group of International Agricultural Research conducted a second review of the machinery development program during this period. This and earlier reviews were undertaken to evaluate the need for such a program and to make recommendations for future support. Impact of mechanization on labor displacement and unemployment continues to be a major concern worldwide and the review team studied the program's past activities and its approach in the light of such issues.

PROGRESS REPORT NO. 21
JULY 1 TO DECEMBER 31, 1975

The following projects were active during the reporting period:

Design and Development

Field machinery

1.	Steering clutches for 5-7 hp tiller	S. Gutierrez, J. McMennamy
2.	Small 4-wheel riding tractor	G. Espiritu, A. Khan
3.	Liquid injector for lowland rice	N. Navasero, A. Khan
4.	Tubular pump	G. Salazar, A. Khan
5.	Vertical axis windmill	G. Salazar
6.	Windmill-pump combination	G. Salazar, A. Khan
7.	Diaphragm pump	N. Navasero, A. Khan
8.	Axial flow thresher with oscillating conveyor	J. Policarpio, A. Khan
9.	PTO thresher	J. Policarpio, A. Khan
10.	Self-propelled cart with thresher	J. Policarpio, A. Khan
11.	Small oscillating grain cleaner	L. Kiamco, J. McMennamy

Drying and processing

12.	Parboiling machine	L. Kiamco, A. Khan
13.	Engleberg rice mill	L. Kiamco
14.	Solar heat collector	L. Kiamco, A. Khan
15.	Factors affecting the efficiency of rice whitening machines	S. H. No, B. Duff

Mechanization Research

16.	Compacted soil studies	D. Kuether
17.	Large oscillating grain cleaner	J. Arboleda
18.	Diaphragm pump test	D. Kuether
19.	Batch dryer burner tests	J. Arboleda
20.	Twin-bed batch dryer	J. Arboleda
21.	Engineering training course	J. Arboleda, D. Kuether
22.	Dryer operator's manual	J. Arboleda

Mechanization Systems

23.	Sequential farming analysis	T. Taguiang
24.	Assembly of rice production-processing data	T. Taguiang, B. Duff
25.	Metals industry study	C. Piputsitee, B. Duff
26.	Production and marketing of hand tractors in the Philippines	F. Juarez
27.	Potential of mechanizing upland cropping operations	G. Villaruel
28.	Mill level post-production systems in Central Luzon, 1973-74	Z. Toquero
29.	Post-production system pilot trials	C. Maranan, L. Ebron Z. Toquero

Industrial Extension

J. McMennamy, S. Gutierrez

Design and Development

Field machinery

Steering clutches for 5-7 hp tiller

Steering clutches are necessary on power tillers for easier turning in the fields and efforts are being made to develop such clutches for the IRRI 5-7 hp tiller. Work on externally mounted open steering clutches, for power tillers already with farmers, was reported previously. Clogging with mud prevents proper functioning of such clutches. Subsequently, totally enclosed steering clutches with drive-engaging jaws sliding on the hexagonal axle and splined shaft were tried (fig. 1). These clutches perform well in mud but are difficult to disengage under full load due to the high torque of the main axle.

Efforts were made to reduce the disengaging force by designing clutches in which the sliding splined sleeve was replaced with an axial steel ball bearing arrangement to take advantage of lower rolling friction. Three semicircular grooves were simultaneously cut in the drive-engaging sleeve and on the axle shaft by assembling the two and drilling holes with an ordinary drill press at their contact surface. Six steel balls (0.635-cm diameter) were used in each groove to form the axial ball bearing. Thus the steel balls replaced the six splines of the earlier design. Preliminary tests indicated smooth movement of the drive-engaging sleeves under full load.

A more compact steering clutch with a steel ball slide arrangement has also been designed (fig. 2) to facilitate production. The single hexagonal shaft of the older design was split into two at the center and the final drive sprocket now floats on this main axle shaft. To eliminate the machining of the semicircular grooves on the axle shaft, a steel sleeve (4.44 cm dia. x 5.08 cm long) was used as the male sleeve with the drive-engaging sleeve being the female sleeve. This change reduces the difficulty of drilling the holes to make the semicircular grooves. Two different types of drive-engaging surfaces were tested on the floating drive sprocket hub for function and durability. The former straight-toothed type was installed on one side and six slotted blind holes (1.27 cm dia., 0.793 cm depth, and 0.635 cm slot) on the other side. The drive-engaging sleeve with straight teeth was retained and the other had circular studs (1.11 cm dia) to engage the slotted holes. Both drive-engaging sleeves slide on the axial ball bearings during engagement and disengagement. Under normal straight travel, spring pressure holds the clutch in the engaged position. Preliminary trials indicated satisfactory performance from both designs and tests are continuing to select the design for commercial release.

Small 4-wheel riding tractor

The development of a 15-20 hp riding tractor was reported in semi-annual report No. 20. The fabrication of the prototype is approaching completion. The objective of this project is to develop a low-cost small riding tractor which can be produced with indigenously available materials such as off-the-shelf popular automotive components and other machinery parts. Discussions with farmers and local manufacturers indicate a demand for a low-cost four-wheel tractor for contract operations and for medium-size farm holdings of 10-20 ha. The small four-wheel tractors originating from the industrialized countries are too sophisticated in design, too expensive, and cannot be locally produced in the LDC.

This tractor is being developed for use in both wetland and upland operations. For lowland application, it must be sufficiently light in weight and have sufficient ground clearance. For upland farming, a heavier tractor is needed to develop adequate traction for pulled implements. The basic tractor will be fairly light in weight for wetland operations and will have provisions for adding concrete weights to increase traction for upland operation.

Most studies indicated that a diesel engine is preferable for developing countries because of its lower fuel costs, longer life, and lower fuel consumption. A two-cylinder 17-hp, aircooled diesel engine with an aluminum alloy block was selected from the range of diesel engines available in the Southeast Asian region. The engine weighs 95 kg and is among the lightest engines commercially marketed in the region. It is equipped with an electric starting and generating system which is very desirable for a small four-wheel tractor. The use of a two-cylinder engine results in much less vibration. This engine is also offered in a single cylinder, 14-hp size with common output shaft dimensions. If the basic tractor design proves successful, efforts will be made to install the single-cylinder engine, thus offering two models of the same basic tractor.

Conventional tractors usually do not use a separate chassis for mounting the engine, transmission, and differential housings, as these are rigidly fastened together to form an integral assembly. This approach results in a heavier machine but because the extra weight is necessary for draft tillage and other dryland work, it is a desirable feature. The same tractor, when used in wetland operation, encounters some serious mobility problems. Since we are interested in developing a lightweight tractor it was necessary to use an automotive-type chassis to which the various components were bolted.

The tractor has the following main components: engine, clutch assembly, I transmission, II transmission, differential, final reduction boxes, and a power-take-off assembly (fig. 3). The engine, clutch and the first transmission are bolted together to form a single unit and this assembly is mounted on the automotive-type chassis by rubber mounts to isolate engine vibration from the rest of the tractor. The second

transmission, differential assembly, final gear reduction boxes, steering mechanism, and operator seat are all mounted directly on the chassis. This arrangement transmits very little engine vibration to the operator, thereby minimizing operator fatigue.

The first and second transmissions were joined by a double universal joint to compensate for misalignment between the two major assemblies due to production tolerances and dynamic distortion of the chassis during operation.

The output shaft of the first transmission transfer case drives a power-take-off shaft at the rear which conforms to basic American Society of Agricultural Engineers PTO shaft standards. The main drive clutch is also used to engage and disengage the PTO shaft by levers provided on the transfer case of the first transmission. Placing the second transmission in neutral permits the use of PTO shaft for operating stationary machines. Since the first transmission has a high and low range, a wide range of PTO shaft speeds, including the standard 540 rpm, are available to drive field and stationary equipment.

The basic prototype tractor weighs 545 kg (1200 lb) without the three-point implement hitch and hydraulic lift mechanism. The 3-point hitch and a set of implements are being developed. Tests are planned for the near future.

Liquid injector for lowland rice

Agronomy and Entomology Department experiments at IRRI have shown that applying fertilizer and systemic insecticides in the root zone is a safe and efficient method for applying such toxic chemicals in lowland rice.

A single-row, push-type granular root zone applicator was developed and previously reported. When tested in flooded paddy fields, the machine exhibited some problems. When the soil was somewhat hard, the wide furrow opener did not penetrate fully into the mud. Use of narrower furrow openers permitted cutting through the harder soil but this still required high pushing forces. Wetting of the fertilizer granules due to its hygroscopic nature caused it to stick to the feed roller and the metering gate, resulting in non-uniform metering. This problem is compounded by the fact that humidity is generally very high near the paddy field surface. The hopper was kept close to the ground in order to keep the metered fertilizer from spreading too much during dropping, which exposed the metering mechanism to occasional splashing of water.

Due to the difficulties experienced with the granule applicator, work on the development of liquid applicators was continued simultaneously. Factors favoring the use of liquid injection methods for root zone placement of chemicals in wetland fields are:

(1) Pushing effort needed for injecting liquid in the root zone

is much less since the liquid applicator openers can be much narrower, than those for granule application.

(2) Placement of chemical in liquid form can be precise and consolidated, whereas granules tend to scatter during placement.

(3) The wetting of granules due to the hygroscopic nature of the chemical is not a problem when using liquid injection methods.

(4) Generally the granular chemical formulations are more expensive than wettable powders.

Liquid injection also has some limitations. Only water-soluble chemicals can be applied through liquid injection. Since more than an equal part of water is required to dissolve urea, and almost twice as much for ammonium sulfate, considerable quantities of water must be handled during liquid application.

A lightweight, two-row, portable liquid injector was developed and tested. This consists of two 1/8-in. injectors attached to the tailend of small skid with narrow furrow openers. The injectors are connected to a backpack-style, 10-liter chemical tank by a 12.7 mm brass tube and plastic hose. The unit is light and the tube not only transmits the chemical solution to the injectors but also acts as a structural member (fig. 4 & 5). The skid is mounted to the applicator tube in such a way that the skid angle can be adjusted for proper planeing on the ground surface to keep the nozzles from penetrating too deep. This unit has no pressure-generating mechanism and the chemical flows only due to gravity.

The two-row injector was tried on a 1/4-ha, newly transplanted rice field. Clogging of the nozzles was not a serious problem, if the operator does not pull the applicator backwards while the nozzles are in the mud. The applicator injects approximately 357 liters/ha, when the operator walks at a rate of 46 m/min; a mixture of 65 kg urea (30 kg N) and sufficient water produced 357 liters of solution. A four-row unit was also built but most operators preferred the two-row unit because it was lighter and easier to handle.

This liquid injector seems to have eliminated most of the problems encountered with the granule applicator and the liquid applicator with the ground driven peristaltic pump. The new liquid applicator is easier to push and maneuver, less destructive to transplanted seedlings, and not as sensitive to varying soil and surface conditions. Presence of some water in the field facilitates easy sliding.

Farmers in Asia are now using two types of sprayers, the knapsack and the pressure type. An adaptation of the liquid injector for use with the two types of sprayer tanks is being developed. Work is also progressing on a low-cost flow indicator to alert the operator to a

blocked nozzle condition.

It was observed during tests that the opening of the injector nozzles required modification to minimize clogging. Three different injector openings were tried (fig. 6). No. 1, a circular opening at the rear, and No. 2, a slanted 45° opening, easily clogged when pulled backward. These openings also clogged when the machine was laid on a soft levee with the opening in contact with the ground. No. 3 injector with a straight detachable injector and a downward pointing circular opening gave the most satisfactory performance. It also clogged when pulled backward, however, it was easily cleaned by removing the injector tube from the skid and pushing the dirt out.

A liquid applicator using wooden structural members was built but most operators preferred the all-metal applicator. The final design of the two-row gravity-fed liquid injector with an all-metal injecting unit and plastic hose and container is being evaluated to determine flow rate in relation to operator walking speed. Work is also underway to develop methods to regulate flow rates for applying more concentrated chemicals, thus reducing the total volume of solution required per hectare.

Tubular pump

Development work on the tubular pump continues. It was previously reported that the pump loses its prime when rotation stops. The addition of small breather tubes, which connect the outer end of the radial tubes to the central portion, solved this problem. To study performance characteristics, two tubular pumps with 1.2-m long radial arms and 25-mm and 32-mm diameter tubes were fabricated. Data obtained from the pumps are plotted in fig. 7. The following conclusions can be drawn from the performance curves:

(1) Pump characteristics -- The pumps exhibited a pumping characteristic pattern similar to centrifugal pumps, i.e., pump output and power requirement decreases as the head increases for the same rpm.

(2) Within the 50-70 rpm speed range and 1.2-m lift, the 32 mm-1.2 m pump gave an output ranging from 2.23 to 1.9 times greater than the 25 mm-1.2 m pump.

(3) Within the 50-70 rmp speed range and 1.2-m lift, the 32 mm-1.2 m pump requires 1.29 to 1.56 times more power than the 25 mm-1.2 m pump. This indicates that the power requirement is directly proportional to the tubular pump size.

Power losses in a tubular pump can be attributed to: drive friction in belts and bearings, friction between the central rotating pipe and water in the pipe, and wind drag.

The percentage of these losses with respect to the total power consumed is shown in table 1 and the following observations can be made:

(a) The percentage of drive friction loss in belts and bearings decreases as the speed increases.

(b) The percentage of loss due to the rotation of the central pipe ranges from 1 to 2 percent of the total power requirement.

(c) The wind drag loss increases steadily with pump speed. On a percentage basis, this loss is maximum at 60 rpm.

The 32 mm-1.2 m and the 25 mm-1.2 m tubular pumps were self-priming upto 1.2-m lift. Using 32-mm diameter pipes as the delivery arms and a 25-mm diameter pipe as the suction tube, the self-priming lift capability was increased to 1.5 m. This is due to the increase in the ratio of the volume of water initially stored in the delivery arms to the volume of air in the suction pipe.

To utilize the tubular pump for shallow well irrigation, it is necessary to increase the self-priming lift capability to at least 4.6 m. A tubular pump with a central container is being fabricated to determine the minimum volume of water that must be stored in the pump for a given suction tube size and suction lift. The volume of water initially stored in the pump in relation to the volume of air in the suction pipe is critical for the pump to be self-priming. Development of a low-cost foot valve for higher head applications is being studied.

Vertical axis windmill

Based on windtunnel tests on a Savonius rotor model, a full-scale, 30 percent overlap, 1.2-m wide by 2.62-m high, 3.14 m^2 frontal area Savonius rotor windmill was fabricated and installed in an open area on the IRRI farm (fig. 8). The rotor was made of three 44-gal oil drum halves welded end-to-end. The power generated by the windmill was measured with a band brake, but fluctuating wind conditions made it difficult to measure the power precisely.

A shorter-height Savonius rotor of the same diameter and 1.2-m height was fabricated and installed on a truck-mounted test stand (fig. 9). Uniform wind velocity was simulated by driving the truck at a constant speed on a straight road. The torque generated by the Savonius rotor was measured with a prony brake. Tests were conducted at wind velocities of 4.47, 6.70, 8.94, and 11.15 m/sec. Some of the important findings are:

1. Tip speed ratio at no-load was 1.70.

2. Maximum power coefficient was obtained at a tip speed ratio

of 0.8 between wind speeds of 4.47 m/sec to 10.0 m/sec.

3. The windmill generated maximum power of 1.65 kg-m/sec/m^2 and 24.7 kg-m/sec/m^2 of projected area, at wind velocities of 4.47 m/sec and 11.15 m/sec, respectively.

The results obtained were similar to the data obtained in the windtunnel tests reported previously.

The prototype windmill is being used for pumping water and a means of coupling this windmill to a 12-volt automotive alternator is being developed.

Windmill-pump combination

A prototype windmill was coupled to a 25 mm-1.2 m tubular pump and installed in an irrigation ditch on the IRRI farm. Although the unit operated successfully, the tubular pump appeared undersized for the windmill. To obtain optimum matching of windmill and pump, tests were conducted separately on the windmill and the pump to study the power generated at different wind velocities and to determine the power required at different suction lifts, respectively.

Based on the results, it was concluded that both the 25 mm-1.2 m and the 32 mm-1.2 m tubular pumps are suitable for coupling to the prototype windmill. The power requirement curves of the pumps intersect the windmill power generation curves in the flat range, between wind velocities of 3.13 - 6.70 m/sec (fig. 10). Estimated performance of the windmill-pump combinations operating at a 1.2 meter head, on the basis of the data from fig. 11 are as follows:

Wind velocity (m/sec)	25 mm-1.2 m pump		32 mm-1.2 m pump		Output difference (l/m)
	Rpm	Output (l/m)	Rpm	Output (l/m)	
3.13	40	0	40	0	0
4.47	53	43.4	50	71.8	28.4
5.36	63	61.6	57	94.5	32.9
6.70	77	85.0	66	128.5	43.5

The output from the 3.14 m^2 frontal area windmill was slightly better when coupled to the 32 mm-1.2 m tubular pump than the 25 mm-1.2 m pump in the wind velocity range of 3.13 to 6.70 m/sec. The data indicate that the optimum operating rpm of the windmill decreases as the pump size increases with some increases in output. It is possible that a larger size (38 mm-1.2 m) tubular pump could also be suitable for this windmill. Making the pump bigger will, however, increase the windmill load and may

reduce the ability of the windmill to respond quickly to gusty winds. Weather data at the Institute indicate that the wind velocity fluctuates from 1.79 to 6.25 m/sec at the IRRI farm. A larger pump will rapidly decelerate after the wind gust has passed and will not accelerate quickly when the next wind gust arrives. Also, looking at fig. 10, one can see that a smaller pump increases the operating range.

A 32 mm-1.2 m tubular pump was coupled to the 3.14 m^2 frontal area windmill and installed on the farm. The output of the windmill-pump confirmed the output computed from earlier studies. This unit pumps 70 liters/min at a 0.95-m head and a wind velocity of 4.47 m/sec. Since wind is not always available, provisions for manual pumping will be added.

Diaphragm pump

The development of the bellows pump was reported previously. Important features of this pump were design and fabrication simplicity, 190 liter/min capacity under low lift conditions, and manual operation. The pump also exhibited the shortcomings of short life of the canvas bellows and potential rotting of the bellows during storage.

To overcome these problems, a double-chamber diaphragm pump (fig. 12) was developed. The chambers are arranged in a vertical orientation which permits the straddling of fairly large bellows by the operator. The pump casing is a light sheetmetal cylinder with a central wall that divides it into two chambers. Identical rubber flap valves are used in the intake and exhaust ports. The two rubber diaphragms are made of old automotive inner tubes. These are bolted to the pumping chamber periphery with a reinforcing metal ring and can be easily replaced. An outlet chamber with the delivery tube is bolted to the pumping chamber at the outlet ports. The inlet valves are located inside a frame which is secured to the underside of the pump chamber with two winged nuts.

A prototype diaphragm pump satisfactorily completed a series of laboratory and field tests which are detailed in the Mechanization Research Section of the report. The tests show that a 135 lb. person can conveniently pump 180-190 liter/min against a 1-m head. The rubber diaphragm does not absorb moisture, so it is expected to have a longer storage life than the canvas bellows. Because of its circular shape, these diaphragms are not subjected to excessive stress concentrations and it is expected that they will have a satisfactory service life. The pump is relatively light and can be manually carried for field operation. The pump can handle muddy water or water with small solid impurities without any problem.

Production drawings are being prepared and this pump is expected to be released for production soon.

Axial flow thresher with oscillating conveyor

In semiannual report No. 20, different versions of the axial flow thresher that have been developed by manufacturers and IRRI were discussed. The primary reason for these improvements was to improve grain cleaning capabilities and lower machine cost. During the reporting period another version was developed, which is simpler than the earlier versions of the axial flow thresher.

This thresher (fig. 13) has a full-length, flat, oscillating tray-like structure installed under the threshing concave to collect the material falling through the concave and convey it to the screen portion for final screening. This tray consists of two parts: a 130x60 cm nonperforated portion on which the threshed material drops and moves longitudinally, and a rear perforated 60x60 cm portion with 9.525 mm (3/8-in.) round holes which removes the chaff and other impurities from the grain. The screen portion has a flat nonperforated pan under it to collect the grain and deliver it to a grain spout on one side.

A blower is mounted above the oscillating conveyor to winnow the lighter impurities before the threshed material reaches the oscillating tray, thus minimizing screen overloading. During operation it was observed that the cross air current from the blower tended to push the grain to the side of the tray away from the blower and this resulted in bunching of material on the cleaning screen. To overcome this problem and to distribute the material uniformly on the screen, the unperforated conveying portion of the tray was installed at a 5° angle from the horizontal so the tray slopes towards the blower. Thus the material pushed to one side by the air current is spread back on the tray for a more uniform distribution of the threshed material on the screen.

The whole oscillating conveyor-screen mechanism is supported by four bar linkages mounted on the base frame. Rubber bushings, used in automotive shock absorbers, are used in the four linkages that support the oscillating tray. The conveyor screen is oscillated through an eccentric cam on an idler shaft driven from the threshing drum. The conveyor oscillates at 320 cycles per minute with a 1.2-cm throw. This combination works satisfactorily for moving the threshed material on the conveyor screen. Attempts were made to eliminate the extra idler shaft by driving the conveyor screen directly from the 560-rpm threshing drum shaft by reducing the oscillating stroke to 6.35 mm (1/4 in.). Tests indicate that the material moves satisfactorily but vibration is high at this frequency and amplitude.

Since the conveyor-screen replaces the full-length auger, the rotary cleaner, and the side collecting boards, this machine costs much less to build that earlier axial flow thresher versions.

In order to provide greater versatility for threshing different crops, the upper concave was eliminated and five adjustable axial moving

louvers have been installed on the inside of the threshing drum cover. This drum cover was made in a hexagonal shape to provide a flat surface for sideways louver movement. The louvers can be adjusted plus or minus 7.5° from the original fixed louver position of 70° with respect to the threshing drum. The five louvers permit control of the time threshed material is retained in the threshing drum and will be useful in threshing a wide variety of crops.

The prototype machine is undergoing field tests to determine its performance on a variety of crops and to compare its output, grain loss, and purity with other threshing equipment.

PTO thresher

Modification of the PTO thresher (fig. 14) was completed during this period. The thresher was tested at the IRRI farm and in nearby farmers' fields. Results indicated an average output of 2770 kg/h, grain loss of 2.3 percent, and purity of output of 96 percent. Purity of output continues to be low due to the residual straw pieces mixed with the threshed grain. This problem can be eliminated by adding a final grain cleaning mechanism at the discharge end of the grain elevator; however, such a solution may be bulky and unwieldy.

The suction draft from the straw thrower works well in winnowing chaff and other light impurities when threshing freshly harvested crops. For dry paddy and other crops like sorghum, however, the draft causes some grain to be blown out with the straw and loss becomes excessive. An adjustable opening on the rotary thrower housing will be provided to control the air draft for minimizing blower loss. Improvements of the cleaning mechanism of the thresher are planned.

Self-propelled cart with thresher

The self-propelled cart-thresher (fig. 15) was described in semiannual report No. 20. There is considerable interest in the self-propelled cart as a low-cost transportation mode for rural areas. Efforts were concentrated mostly on improving the design of the machine during the period of this report.

The cart's stability with a full load of 720 kg was found satisfactory on smooth concrete and rough country roads. Its loaded starting ability on a 15 percent slope is satisfactory. Passenger comfort was unanimously rated as poor, which was expected since the cart is not equipped with a spring suspension. The original brakes were inadequate, but subsequent modifications have improved the brakes to effectively stop the fully loaded cart on slopes of 15 percent. The steering is somewhat difficult when moving up or downhill under fully loaded conditions; however, the negative camber is necessary to provide straight tracking on roads.

The self-propelled cart has generated considerable interest among

manufacturers and because of the variety of conditions under which it may eventually be used, further improvements are being incorporated. The single forward speed of 14 kmph is being replaced with two forward speeds of 15 kmph and 9 kmph and a reverse drive. These speeds will be achieved through a double-belt pulley for forward and a friction drive for reverse, thus maintaining simplicity and ease of manufacture. A simple locking mechanism is being installed on the brake pedal so the brake can be used as a parking brake. A number of requests for drawings of the cart have already been received. Drawings have also been sent to the World Bank to evaluate its possible use as low-cost transport on road and other earthmoving and construction projects.

The mechanism for loading and unloading the thresher on the cart is being simplified by replacing the screw jacks with two pivoting legs on the underside of the thresher rear. This will permit lifting of the rear end of the thresher from the cart with the help of the cart's forward movement. The machine is now in its final stage of prototype evaluation and is expected to be ready for release to cooperating manufacturers in the near future.

Small oscillating grain cleaner

Traditionally, simple wooden winnowers have been used in Asia for cleaning grain. With increased rice production, such equipment is no longer adequate. The output of these winnowers is quite low and they require recycling to achieve satisfactory cleaning.

The development of a rotary screen cleaner was described in earlier reports. This machine can clean 2 to 2-1/2 tons of paddy per hour with 98 percent purity. This cleaner is, however, too costly to produce although its performance is good and it can handle unusually dirty grain.

A 2-2 1/2-ton capacity oscillating grain cleaner was developed and described in earlier reports. This machine has a hopper, two flat screens mounted on top of a grain collecting pan, a centrifugal fan, an auger, and a bagging elevator. Grain from the hopper passes through a rotary feed to the upper screen which is inclined at 12° and oscillates at 300 cycles per minute with a 1.3 cm stroke. The first screen removes the larger impurities such as chaff and straw and the grain falls on the lower screen where fine impurities such as dust and dirt are removed. Light impurities are removed by the blower as the grain cascades from the second screen. Cleaned grain is transferred by an auger to a rotary thrower elevator for bagging. This machine is cheaper to fabricate than the rotary cleaner. Drawings have been released to interested manufacturers in the Philippines and Sri Lanka. Test results appear in the Mechanization Research section of this publication.

A small oscillating cleaner is being developed for farm-level operations (fig. 16). This machine has two major moving components,

a dual oscillating screen assembly and a centrifugal fan. The screens are horizontal and the grain moves over the screen due to the vibrating action. Grain is fed onto the screen from the hopper due to the vibrating motion of the screen. An adjustable gate on the hopper opening permits adjustment of the feed rate. The screens oscillate at 250 cycles per minute with a 2.6 cm stroke. The screen assembly is installed on rubber mountings, made from old automobile tires to reduce cost, noise, and service problems. Dynamic balancing weights have been added to minimize machine vibration. The machine can clean one ton of grain per hour at 96 percent purity. Revisions are being made to improve purity and to simplify the design before releasing to manufacturers for commercial production.

Drying and processing

Parboiling machine

The traditional process of paddy parboiling involves steeping the paddy in water for 24 hours, steaming for 1 hour, and then drying it for 4 to 6 hours. This is a time-consuming practice, so a faster parboiling method was developed in which paddy is soaked for 30 minutes in water at 60°C, followed by flash-heating of the paddy by exposing it to high temperature.

Previous reports discussed the development of a hot-sand parboiling machine (fig. 17) in which sand acts as the heat transfer medium. The soaked paddy passes through a pre-heating cylinder where surface moisture is removed. The paddy is then conveyed through a second rotating cylinder in which it is mixed with hot sand for gelatinization of starch granules. Paddy is separated from the sand by a screen portion of the cylinder and is discharged from the machine. The hot sand recirculates across a steel pan to pick up additional heat from a burner located under the pan.

The heated-sand machine parboils paddy satisfactorily although some white bellies are retained in parboiling with this process. The machine exhibits remarkable uniformity in drying paddy due to good heat transfer between the hot sand and the paddy. However, the machine's thermal efficiency is low since heat must pass through the steel plate to heat the sand. It was also observed that wear in the rotating drum was high due to the abrasive property of sand. The repetitive heating and cooling of sand disintegrates some sand into fine dust which is difficult to separate from paddy.

Another parboiling machine is being developed which will eliminate sand as a heat transfer medium and directly expose soaked paddy to high-temperature air. In this machine (fig. 18), steeped paddy will be conveyed by a screw feeder to a slowly rotating cylinder for direct exposure to a stream of hot gases for gelatinization. Since flash-

heating of paddy will be accomplished without an additional heat transfer medium, higher thermal efficiency and increased component life are expected.

Engleberg rice mill

In rural areas of Asia a large percentage of paddy is milled with the steel huller type rice milling machine. These mills have a low total milling recovery and produce large quantities of broken rice. The primary objective of this study is to improve the performance of these mills by modifying existing components of the Engleberg mills so existing mills could be easily modernized.

A study of the performance of the Engleberg mill indicated that rice is broken due to the shearing action between the protruding steel blade and the rotating cylinder. It was felt that grain breakage may be reduced if a flexible blade was used.

The 1/2-in. thick blade, made from old automobile tire carcass, was installed in an Engleberg mill in place of the steel blade. Initial tests indicated promising results with respect to head rice recovery, total recovery and grain whiteness. Comparative tests between steel and rubber blades are being continued.

An automatic (weight-loaded) discharge gate was also installed in place of the sliding outlet gate. This feature facilitates operation since milling pressure in the cylinder can be conveniently controlled by adjusting the load on the gate. Once the adjustment is made, the operator does not need to make repeated adjustments as with the sliding gate.

The sliding feed gate arrangement on the machine is cumbersome for the operator, as he must repeatedly adjust it to control the flow of paddy into the machine. The gate is being replaced with a spring-loaded sliding gate which can be set to a predetermined position through a screw adjustment. The operator can then open the gate wider when required without changing the preset opening. This will permit inexperienced people to operate the machine satisfactorily.

Work was also done on mounting a centrifugal huller with a rice hull separator on the Engleberg machine. This was done to separate the hulling and polishing processes which are combined in the conventional Engleberg rice mill. Earlier studies indicate that use of the Engleberg mills for polishing improves milling performance.

The hull separator uses the principle of cyclone separation for removing hulls from brown rice. The brown rice and hull mixture from the centrifugal huller outlet enters at the bottom of the cyclone cylinder. Rice hulls, being light, move upward with the spiralling air

while the heavier brown rice spirals downward and is removed through an opening at the bottom.

Initial tests on the modifications indicate encouraging results and work is continued on this project.

Solar heat collector

Many solar collectors have been developed in the industrially advanced countries; however, these collectors are very expensive. Efforts at IRRI are directed toward developing low-cost solar heat collectors that can be used for drying agricultural crops in the developing countries. As discussed in report No. 20, five different solar heat collecting panels were designed and evaluated. The tests indicated that panel B (made of corrugated cardboard) was most efficient at 34.39 percent, followed by panel A (aluminum wire mesh of accordion fold) at 33.6 percent; panel C, made from corrugated sheetmetal, was 30.01 percent, and panels D and E gave 24.4 and 21.41 percent efficiency, respectively.

Based on this evaluation, a new cardboard collector was constructed from two standard 122 x 244 cm (48 x 96 in.) cardboard panels (fig. 19). The collector was formed by folding one upper cardboard panel in accordion fashion and then joining it to a flat bottom panel. Five transverse C-shaped cardboard channel members were installed across the accordion to resist twisting and bending. The panel is painted dull black on the top collecting surface. The whole assembly is enclosed in a thin polyethelene plastic sheet to provide air circulation. The angle of inclination of the accordion surface is 60°, which permits optimum solar absorption per unit area since it minimizes intershading of the accordion folds during peak periods.

Performance tests are being planned for this collector.

Factors affecting the efficiency of rice whitening machines

Because of a lack of basic information, a project was undertaken to determine the mechanical and operational factors affecting the efficiency of friction-jet air type rice whitening machines (fig. 20). Alternative cylinder and feed screw configurations, screen types, cylinder speeds and counter-pressure levels (table 2) were examined to determine their impact (singularly and in combination) on the quality and quantity of milled rice, machine performance, and internal radial pressure in the whitening chamber. Load cells (fig. 21) and strain gage equipment were used to measure the internal radial pressure (fig. 22).

The results are summarized as follows:

1) Feed screw pitch and the size of the feed gate opening, which

determines the feed rate, appeared to be the most important factors affecting radial pressure, quality, and quantity of milled rice and the mechanical efficiency of the machine.

Using a feed screw with a wide pitch (4.8 cm), radial pressure was relatively high and head rice recovery rates were low. Capacity and machine efficiency were much higher, however, than obtained with a narrow pitch (2.3 cm) feed screw.

2) The shape of the screen surrounding the whitening chamber had an important effect on whitening efficiency. The existence of small protuberances on the original screen significantly increased both machine capacity and mechanical efficiency but without a significant decrease in head rice recovery or development of excessive radial pressure.

3) An increase in cylinder speed from 380 to 820 rpm produced a positive effect on head rice recovery for all machine combinations. Head rice recovery was considerably lower at 380 rpm using a wide pitch screw than at speeds from 600 to 820 rpm. The effects of cylinder speed on radial pressure, capacity, and machine efficiency showed contrasting results, depending on the width of the feed screw pitch. With a narrow feed screw pitch (2.3 cm), a direct proportional relationship was observed between cylinder speed and both radial pressure and machine efficiency. In contrast, the 4.8 cm pitch feed roller produced a series of inverse relationships between the above variables. Further study on the interaction between cylinder speed and feed screw pitch is recommended.

4) An increase in the counter pressure level produced a negative effect on head rice recovery with an increase in radial pressure, capacity, and machine efficiency for all machine combinations and at every level of cylinder speed.

5) Head rice recovery rates were conditioned primarily by the pressure inside the whitening chamber. According to the empirical characteristics curve (fig. 23) developed in this study, the relationships of head rice recovery (Y_h) and machine capacity (Y_c) to internal radial pressure (X_p) followed an inverse quadratic function and a linear function respectively.

The correlation between capacity and power consumption per unit of brown rice (Y_e) is expressed in the following exponential function:

$$Y_e = 1.63Y_c^{-0.7786^{**}} \quad , (R^2 = 0.94)$$

These relationships indicate that as radial pressure increases above a certain range (1.6 to 2.0 kg/cm^2 based on the results of the experiment) head rice decreases in a quadratic relation with a linear

increase in capacity but without any decrease in power consumption per unit of brown rice. In contrast, if radial pressure is below the range shown above, power consumption increases dramatically with a linear decrease in capacity but without significant increases in head rice recovery.

6) A rapid rise in grain temperature seemed to have a close relationship with the pressure generated inside the whitening chamber, and subsequently with head rice recovery rates. The higher the rate of temperature increase, the lower resulting head rice recoveries.

Mechanization Research

Compacted soil studies

This study was initiated during the 1973 wet season, and is in its 5th cropping season, for the purpose of providing data to assist in determining appropriate tillage systems for continuously cropped wetland rice.

Figure 24 shows that the compaction layer has not yet stabilized in any of the tillage systems, although some stabilization does occur during the dry season. The deepening of the compacted layer is much more pronounced in the plot where the large 4-wheel tractor system is used when compared to the walking tiller systems. Four-wheel tractor bogging was experienced for the first time during field tillage operations for the 5th cropping season. The study will continue for at least 2 more cropping seasons. Crops 1, 3, 5 were grown in the wet season and 2 and 4 are dry season crops.

Large oscillating grain cleaner

The oscillating grain cleaner development has been discussed in previous reports. After a series of tests and modifications by the design section, a final prototype was made for testing before release to manufacturers (fig. 25). The tests obtained airflow measurements and cleaning performance where capacity, efficiency, breakage, milling and other observations were noted.

The airflow measurements made at the duct opening at the grain discharge from the screen were immediately evaluated and resulted in modifications of the blower blades to produce a more uniform lateral air distribution. The final configuration has a two-inch wide blade with tapered ends. Decreasing the blade width to 1-1 1/2 inches will increase the core space diameter to provide more air to the middle section, which will probably produce a more uniform air discharge from the blower.

Results of the cleaning test showed that the machine has a capa-

city of 1.5 to 2.7 tons/hour with a cleaned grain purity of 96 to 98% depending on machine speed and air inlet shutter adjustment. The grain loss was less than 0.5% in all tests and no machine-caused grain breakage was noted.

Additional modifications incorporated in the final drawings of the machine included: change of blower ducting curvature, installation of a handle and rubber wheels for portability and a change from solid to hollow eccentric shafting. The test results indicate that additional performance and operating improvements can be realized by: increasing the length of the top screen, weight reduction of the oscillating assembly, dampening machine vibration, adding guards to prevent fine materials from discharging on the drive belts, and screen inclination adjustments.

Diaphragm pump test

A new diaphragm pump has been designed to eliminate the problem of short service life of the fabric used in the bellows pump.

The pump was laboratory tested under simulated field pumping conditions for 85 hours with no major failures. Tests to determine head vs. flow capabilities were conducted in the laboratory and in irrigation ditches.

Average pump output is 115 and 195 liters/min at heads of 2 and 1 meters, respectively, using the results from tests of 10 and 30 minutes in duration. The maximum practical head under which a man can operate the pump is 3 meters. Figure 26 shows that when the operator pumps at a normal rate there is very little drop in pumping capacity with time. Higher pump capacities (up to 225 liters/min at 1 meter heads) can be obtained if the operator exerts maximum effort, but capacity drops off after 5 to 10 minutes due to operator fatigue.

No valve or flow problems due to the impurities in irrigation water were noted. The pump showed minor wear on the rubber diaphragm parts which is being corrected by some design changes. Additional life testing will be conducted to verify the changes. Production drawings are being produced for release to manufacturers during the first quarter of 1976.

Batch dryer burner tests

Manufacturer prototypes of one kerosene burner/blower assembly and two rice hull furnaces were tested to determine proper operation and performance. All units had been modified from the original IRRI drawings by the manufacturer to fit his capabilities, and to reduce weight and cost.

The kerosene burner/blower experienced an early fan blade weld failure so performance testing could not be completed.

The rice hull furnaces deviated from IRRI specifications principally in that sheet metal was substituted for fire brick in one model and thinner fire brick than specified by IRRI were used in the other unit. Although the air heating capability of these furnaces was satisfactory, both units showed excessive warpage of the metal parts that were directly exposed to the flame. The tests also showed the importance of the location of the rice hull hopper as specified by IRRI to prevent the flames from entering the hopper and creating a fire hazard.

These tests showed that light metals must be protected from the open flames of the fire pit. Cast iron or heavy steel sections must be used for grates, louvers, and other exposed parts. The tests indicated that major modifications to these assemblies should not be attempted by manufacturers until they have gained some manufacturing and operating experience with the designs as provided by IRRI.

The test results were forwarded to the manufacturers concerned with recommendations for changes to correct deficiences.

Twin-bed batch dryer

The twin-bed batch dryer system (fig. 27) was developed as an improvement of the regular IRRI batch dryer to dry and temper grain by directing the heated air to the bins alternately. More efficient use of the burner assembly can be realized since it can be used to dry grain in one bin while the other bin is being unloaded and reloaded with wet grain. An evaluation of the system was conducted to answer the following:

1) Can effective drying time be reduced when tempering is used to allow moisture transfer to the surface of the grain?

2) Will grain milling qualities be improved as a result of longer total drying time (including tempering)?

Intermittent drying intervals of 1 and 1 1/2 hours were selected because this period provides sufficient time to unload and reload one ton of grain from the bin not receiving heated air. In addition to the above drying intervals one batch of paddy was dried continuously for control. All tests were conducted under the same operating conditions as the regular batch dryer. Variation of the air temperature or airflow was not attempted.

Test results show that the expected reduction in effective drying time was not realized by the drying/tempering cycles, when compared to continuous drying. Moisture reduction rates were approximately the same for all tests. Milling results from the grain dried in the twin bed batch dryer showed insignificant differences when compared to the grain dried continuously.

More extensive tests are needed to determine if effective drying time can be reduced in this system by using increased drying air temperatures, shorter drying periods, longer tempering periods, and aeration during tempering, without adversely affecting the rice milling recoveries.

The 45° orientation of the bins shown in fig. 27 consumes more space than desirable, so alternate methods of positioning the bins with the necessary burner-to-bin ducting revisions are being studied.

Engineering training course

The Agricultural Engineering Department offers a two-week course on the manufacture and utilization of IRRI machines. It is intended primarily for individuals from the engineering staffs of manufacturers who are now, or plan to be, closely involved in the manufacture of IRRI machines and representatives of governmental agencies concerned with agricultural mechanization.

Thirteen students from eight countries attended the September 1975 class. Twelve trainees have been invited to the February 1976 course. Applications are now being received for the September 1976 course.

Dryer operator's manual

An operator's manual for the batch dryer has been written, is being printed, and will be available for distribution shorty. The manual includes the necessary instructions for the proper use, operation, and maintenance of the IRRI batch dryer and will be helpful to manufacturers of the IRRI dryer in the preparation of their dryer manuals.

Mechanization Systems

Sequential farming analysis

An issue of growing interest in recent years has been optimization in the choice and use of farm mechanization for a range of farm conditions and sizes. In rice producing areas where the threat of labor displacement can create social unrest, mechanization systems must be formulated around a complex set of social, economic and technical constraints. One method for possible alleviation of these constraints with modern small-scale mechanization has been the concept of sequential farming. In contrast to seasonal use of farm resources, this method embodies the potential for near constant employment of land, labor and machinery by performing operations which are in close time proximity on a sequential basis. This is achieved by scheduling harvesting and planting operations on plots of a size which can be managed efficiently

by relatively labor intensive technologies, including small machinery. By scheduling these operations continuously on limited portions of the total farm area rather than seasonally over the entire farm, it is possible to intensify cropping and annual output.

A series of case studies are presently underway to evaluate present farming situations utilizing this method to determine the constraints to possible widespread application. At a later stage, if the results of the case study review appear promising, a more comprehensive attempt will be made to survey and model farms of various types and sizes to permit choice of machine complements, examination of possible income and employment effects, and assignment of priorities in development of new or improved machine technologies.

A review paper outlining the elements of the sequential system and reporting the case studies will be completed early in 1976.

Assembly of rice production-processing data

A project is presently underway to assemble and publish in a technical data manual information describing each task and operation in the sequence of steps making up rice production-processing systems. Initially, information is being gathered from sources describing irrigated lowland and rainfed farms, upland farms (looking only at the rice production enterprise) and covering a range of agro climatic zones. The objective of this exercise is to compile and present the data in a manner suitable for use in budgeting, programming, or planning exercises which focus on issues such as choice of technique, labor-machine substitutability in selected operations, and assessing the impact of mechanization on employment, income, and production. A draft version of this manual is scheduled for review in mid-1976.

Metals industry study

In 1973, a survey of more than 2,000 metal fabricating firms was conducted by the Metals Industry Research and Development Center and the East-West Center of the University of Hawaii. IRRI provided limited logistical support for a portion of the study, primarily to gather information describing the farm equipment industry. Analysis of data from a sample of 40 firms producing farm equipment and 40 non-farm equipment producers is currently underway. The objectives of this analysis are 1) to explore the relative costs of producing farm machinery by location (rural versus urban based firms) and by firm size, 2) to examine the sources and mechanisms for the transfer of design information, 3) to evaluate labor absorption potentials and plant utilization factors, and 4) to examine possible constraints to the growth of such firms. The statistical analysis of this data is now underway and a preliminary report is being prepared.

The production and marketing of hand tractors in the Philippines

Data from a number of previous and on-going studies in the department were consolidated to provide information on the production and marketing of hand tillers in the country. The study objectives were to: a) determine the performance characteristics of hand tractors and measure the costs of ownership and operation; b) determine manufacturing requirements and examine local production capabilities; c) develop a marketing profile by examining sales patterns, regional distribution and prices; and d) examine the major problems incurred in production, marketing and utilization of these machines.

An incomplete enumeration indicated 32 firms engaged in hand tractor activities in the country at present. These firms were classified by size and by type. Of the 32 firms, 21 are engaged in manufacturing activities with 11 reporting a rated production capacity ranging from 50 to 500 units per month in 1975 (table 3). Actual production, however, ranges from only 12 to 292 units per month, giving an average capacity utilization of 57 percent or an increase of 19 percent over that achieved by the same firms in 1974. Two major reasons attributed to this under-utilization of production capacity by firms are lack of capital and the non-availability and high cost of raw materials.

A final report on this project is to be completed by the end of March, 1976.

Potential of mechanizing upland cropping operations

This study is designed to assess the potential for mechanizing upland cropping operations. A total of 100 farmers, equally divided between two villages of Laguna and Batangas provinces were surveyed.

A complete assessment of farm operations was carried out to compile an inventory of current practices, technologies and problems as perceived by farmers. Table 4 illustrates the degree of interest upland farmers have in mechanizing particular operations. Weeding and weed control are priority areas, followed by mechanical land preparation and improved chemical application equipment. Because of the diversity of crops grown on these farms and their low productivity, harvesting, threshing, seeding, and fertilizer application equipment did not appear to have great potential. A closer detailed analysis of individual cropping requirements will be necessary to examine this issue for selective requirements.

Farmers justify the need for mechanization under five major categories: 1) easing work and increasing labor productivity, 2) speed up farm operations and ensure more timely performance, 3) lower costs, 4) improve quality of work, and 5) to increase yields and total farm productivity. Most farmers felt that small farm size, low yields (and

incomes), lack of suitable mechanical designs for upland conditions and the crops grown, the lack of cash, and increased operational costs incurred from using machines were the major inhibiting factors to adoption of improved technologies.

Data from this study are now being encoded for computer analysis.

Mill level post-production systems in Central Luzon, 1973-74

The nature and objectives of this study were outlined in semi-annual report No. 20. The mill level survey was undertaken to determine the financial and economic elements involved in mill ownership and operation. Specifically, the study aims were: 1) to determine the physical performance of mills of specified types and capacities, 2) identify factors causing variability in physical and economic performance, and 3) assess the nature of problems affecting the rice processing industry.

The following sections present the preliminary findings from Central Luzon.

General information about the mills

Sixty-four rice mills were surveyed in Central Luzon, 31 cono and 33 kiskisan.[1/] The majority of these mills are under sole proprietorship and the rest are either partnerships or corporations. Eighty-six percent of the mills are powered by diesel engines and only 14 percent use electricity.

Cono mills are usually found in towns and market centers away from the source of paddy (unhulled rice). Kiskisan mills, on the other hand, are usually located in rural areas very near the source of paddy.

Drying operations

Only 28 percent of the mills studied had drying facilities. These usually consist of concrete pavement at the mill house which is used for sundrying. Only one mill owns a continuous flow-type dryer. Most drying facilities are owned by cono mills. Only 9 percent of the kiskisan owners performed any drying activities.

Cono mills have larger drying areas relative to kiskisan mills (5.5 tons as against 2.8 tons) since most of the former are engaged in paddy

---

[1/] Cono mills usually consist of one or more underrun disc sheller units (for dehusking) used in series with a vertical cone-type polisher (for whitening). The kiskisan, sometimes called a steel huller or Engleberg mill is a small-scale single pass device which combines dehusking and whitening in a single operation.

and/or rice trading. The bulk of the paddy dried at cono mills is owned by the mill owner. A limited quantity comes from customers who either pay a fee or use the dryer for free, provided the paddy dried will be processed in the mill.

Kiskisan mills seldom render custom drying. Paddy brought for milling is usually previously sun-dried. When the facilities at the mill are employed, it is usually free of charge.

Storage/warehousing operation

Only 42 percent of the mills have facilities for storage (table 5). A majority of these are cono mills with storage located in the mill house or adjoining it. Paddy and/or rice deposited in these mills is either self-owned or comes from customers engaged in trading. Fifty nine percent of the cono warehouses are bonded.

In the case of the smaller kiskisan units, only 15 percent have warehouses. Since the kiskisan generally mills on a job-lot basis, not one of the warehouses reported was bonded.

Thirty-seven percent of the mills do not charge for shrinkage losses provided the paddy deposited is milled at the site. However, once the deposit is withdrawn or taken away, a shrinkage allowance of 1 to 2 kilograms is deducted per cavan of paddy.

A similar arrangement exists in the payment of storage fees. Nineteen percent of the mills accept deposits without charge provided the paddy is processed in the mill. Once the paddy is withdrawn a storage fee ranging from P0.20 to as high as P2.00 per sack is charged.

Out of the 27 rice mills with warehouses, only one mill, a cono type, reported full utilization of the warehouse. The rest or 96 percent reported underutilization of their storage facilities.

Irregularity of paddy supply accounted for 33 percent of the reasons for warehouse underutilization. The peak and lean months concide with the periods before and after harvest. Twenty-three percent of the millers claimed their warehouses were underutilized because they were used solely for their stocks. Other millers complained that depositors required excessive storage space to avoid mixing with other deposits.

Milling operations

The bulk of the paddy moving through cono mills is generally for businessmen, while a majority of the customers at kiskisan mills are small farmers whose paddy is usually for home consumption.

Standard scales are usually found in cono mills. This explains

why 58 percent of these mills measure milling recovery by weight and only 42 percent by volume. Conversely, few kiskisan mills own standard scales. Milling recovery is usually measured through the volume of rice recovered using petroleum cans (5 gallons) or wooden boxes.

Kiskisan mills can initiate milling operation with only one sack or less of paddy. In the case of cono mills, the smallest lot size required ranges from 3 cavans (1 cavan = 44-50 kg) up to 300 cavans depending on the size and complexity of the mill.

Milling recovery, both by weight and by volume, was higher for cono than for kiskisan mills. Cono mills surveyed reported a milling recovery of 66 percent by weight and 54 percent by volume. In contrast, kiskisan mills reported a milling recovery of 62 percent by weight and 48 percent by volume. These figures, however, should be evaluated with caution since they were based on the response of the mill owner and/or operator. The veracity of the figures will depend on the honesty and accuracy of the estimation procedure used by the respondents.

The average rated milling capacity of cono mills is 730 kilograms per hour. Of this, only 81% is actually utilized. In the case of kiskisan mills, the average rated capacity is 296 kilograms per hour. Actual milling capacity is only 146 kilograms per hour or 49 percent.

In spite of the higher degree of utilization by cono mills, only 2 out of 31 mills reported full utilization. For kiskisan mills, only one out of 33 reported full utilization.

Inadequate quantities of rough rice brought for milling accounted for 40 percent of the reasons for underutilization of the mills. Lack of paddy resulted from typhoons, floods, and tungro infestation in the area during the period covered by the study. This problem was further aggravated by an excessive number of mills in some areas which resulted in extreme competition, especially among the kiskisan type. Twenty-two percent of the mill owners claimed that their mills were too old and that the manufacturer's capacity specifications could not be met. Moreover, the rated capacity of second-hand mills was often difficult to ascertain, thus there was considerable possibility for error in estimation.

Problems in the industry

Ninety-four percent of the millers studied reported problems in the operation of their mills. Problems in milling were classified into four categories: financial and technical, operational, organizational, and government policies.

Financial/technical problems accounted for 63 percent of the total responses (table 6). The high cost, durability, and availability of spare

parts accounted for 16 percent of the reported problems. Frequent breakdown of the mill brought about by the poor quality of paddy brought for milling was another major problem.

Milling problems relating to the operation of the mill accounted for 23 percent of the total problems reported. Lack of paddy for milling ranked first in importance under this category. Payment of milling fees was a commonly voiced problem, particularly among kiskisan operators.

A summary document reporting the details of the mill level evaluation survey is under preparation.

Post-production systems pilot trials

To test the economic and technical efficacy of the range of farm level post-production systems illustrated in figure 28, a series of village level trials are being undertaken at several sites in the Philippines. The objectives of these trials are: 1) to measure the degree of quantitative and qualitative losses at each stage of each system, 2) to generate data describing the comparative capacities and costs of each system, and 3) to identify optimal systems, priority elements within systems, and the institutional or policy related constraints which inhibit introduction and use of improved technology and management practices.

Pilot trials have been completed in three barrios located in Central Luzon. Five additional sites are scheduled for implementation during 1976. Summaries of preliminary findings will be reported in subsequent reports and the department's working paper series.

Industrial Extension

IRRI's Agricultural Engineering Department has formal collaborative industrial extension projects with organizations in six countries outside the Philippines and unfunded cooperative linkages with organizations in six other countries. All these projects attempt to get IRRI machines manufactured locally so appropriate machines will be available to small farmers through normal commercial channels.

The formal projects fall into two categories -- USAID funded industrial extension projects and IRRI core budget funded industrial extension subcontracts. There is a significant difference in the scope and level of funding for these two types of projects.

The scope of IRRI's industrial extension effort was significantly increased when a USAID sponsored project was put into effect June 30, 1975. The name of this project is "Industrial Extension of Small Scale Agricultural Equipment Developed at IRRI", (USAID/ta-C-1208), and will be staffed by teams located in Pakistan, Philippines and Thailand (table 7). Each team will consist of an industrial extension engineer and about

six support staff. The full effect of this program will not be felt until mid-1976 when the program is fully staffed. Staff recruitment is about 50 percent complete (fig. 29).

The basic objective of the project is to identify manufacturers who are interested in producing IRRI-designed machines and providing them with technical assistance. In support of these basic objectives the project staff will conduct economic and market evaluation studies to determine which machines offer the greatest potential for adoption, conduct tests to determine the performance of IRRI-designed machines under local conditions so that adaptive design and development can be performed as needed, and provide business and management guidance to manufacturers entering production of IRRI-designed machines.

IRRI's machinery development program was funded by USAID until the end of 1974. IRRI's contract with USAID permitted subcontracting of extension projects in countries outside the Philippines. The term "subcontracts" is still used even though they are now core funded.

Core budget supported industrial extension projects are hosted by in-country organizations that have objectives in cognizance with those of IRRI's machinery development program (table 7). Modest funding is provided to support the execution of the extension project. Funds are used to supplement salaries, travel expenses, and other direct cost. Overhead and administrative expenses are usually absorbed by the cooperator.

The objectives of the subcontract programs are to promote and assist the local manufacture and marketing of IRRI-designed machines, conduct tests to evaluate the performance of these machines under local conditions, encourage adaptive and applied research on agricultural mechanization problems, and to foster the exchange of information dealing with agricultural machinery.

Linkages have also been developed with several organizations in Asia, Africa, and South America. As in the case of the subcontract projects, an organization with an interest in promoting the use of appropriate small scale machines is involved. Typically, one staff member of the cooperating organization works on a time available basis in assisting IRRI's industrial extension efforts (table 7).

Interest in IRRI-designed machines has been steadily gaining momentum. A total of 227 new inquiries were received in 1975 with 146 of these received during this reporting period. These inquiries came from manufacturers, research centers, and educational institutions. The increased interest on the part of manufacturers is most dramatic with 21 inquiries received during the first half of 1975 and 88 received during the second six months of 1975. In response to these inquiries over 200 sets of drawings were sent to cooperators during this reporting period.

A two-page newsletter was created to keep this growing number of interested manufacturers informed of developments in IRRI's machinery development program. The first newsletter has gone to press and will be distributed in early 1976. It will announce the release of new designs, report on the status of current projects, report newsworthy accomplishments of IRRI manufacturers, announce training and study programs in the department, solicit suggestions for new projects and product improvement, and advise manufacturers where they can acquire assistance.

As of December 31, 1975, approximately 36,110 IRRI-designed machines have been produced with 13,958 of this total manufactured in 1975 (table 8). This represents an increase of 39 percent from 1974. There are 14 Filipino manufacturers and 12 manufacturers outside the Philippines.

PERSONNEL LIST

Name	Position
A. Khan	Agricultural Engineer & Project Leader
B. Duff	Associate Agricultural Economist
D. Kuether	Associate Agricultural Engineer
J. McMennamy	Associate Agricultural Engineer
J. Policarpio	Assistant Design Engineer
J. Arboleda	Sr. Research Assistant
S. Gutierrez	Sr. Research Assistant
N. Navasero	Sr. Research Assistant
Z. Toquero	Sr. Research Assistant
G. Espiritu	Research Assistant
L. Kiamco	Research Assistant
B. Ramos	Research Assistant
G. Salazar	Research Assistant
T. Taguiang	Research Assistant
L. Ebron	Research Aide
E. Escover	Research Aide
F. Juarez	Research Aide
C. Maranan	Research Aide
G. Villaruel	Research Aide
R. Angco	Draftsman
M. Diestro	Draftsman
F Jalotjot	Draftsman
R. Pabustan	Draftsman
N. Rivera	Stockroom Custodian
A. Bagalso	Secretary
F. Barrera	Secretary
E. Co	Secretary
C. Jizmundo	Secretary
E. Dungo	Shop Foreman
Z. Borja	Machinist
A. Dizon	Machinist
C. Flojo	Tinsmith
R. Santos	Tinsmith
A. Barot	Welder
A. Camacho	Shop Mechanic
R. Dignadice	Shop Mechanic
M. Macatangay	Shop Mechanic
P. de Mesa	Shop Mechanic
M. Castro	Mechanic Helper
M. Fabellar	Mechanic Helper
E. Macatangay	Mechanic Helper
M. Salac	Mechanic Helper
F. de Leon	Field Assistant
J. Reyno	Field Assistant
R. Tobias	Field Assistant
L. Villegas	Field Assistant
R. Capule	Laborer
N. Silab	Laborer

Table 1. Total power requirements for 25 mm-1.2 m and 32 mm-1.2 m tubular pumps.

RPM	% of total power requirement				Total power requirement (kg-m/sec)
	Pumping power	Wind drag loss	Bearing & belt loss	Rotation loss	
			25 mm -1.2 m		
45	29.6%	14.3%	55.0%	1.1%	2.53
50	44.0%	18.9%	35.7%	1.4%	3.89
55	51.3%	21.6%	25.6%	1.5%	5.41
60	57.2%	21.9%	19.0%	1.5%	7.30
65	63.4%	21.0%	14.1%	1.6%	9.87
70	67.0%	20.3%	11.0%	1.7%	12.62
75	70.3%	19.4%	8.6%	1.7%	16.15
80	72.5%	11.6%	6.9%	2.0%	20.18
			32 mm-1.2 m		
45	43.1%	11.6%	44.4%	0.9%	3.12
50	56.2%	15.3%	27.4%	1.1%	5.08
55	63.0%	17.4%	18.5%	1.1%	7.50
60	69.0%	18.2%	12.8%	1.1%	10.80
65	72.7%	17.2%	9.1%	1.0%	15.30
70	76.6%	15.7%	6.7%	1.0%	20.83

Table 2. Specifications of original and modified components of the friction-jet air type rice whitening machine.

Items	Type or symbol	Size or level	Remarks
Cylinder	A (original)	L x D* (cm) 16.7 x 10.1	Assembled with wide pitch feed screw (pitch x depth = 4.8 x 1.5 cm). Total length of cylinder and feed screw = 32.2 cm
	B (new)	L x D* (cm) 22.2 x 10.1	Assembled with narrow pitch feed screw (pitch x depth = 2.3 x 1.5 cm). Total length of cylinder and feed screw = 32.2 cm
Screen	A (original)	L x D* 21.8 x 11.1	Having concave protuberances and relatively large slotted perforations (1.2 x 0.12 cm)
	B (new)	21.8 x 11.1	Having smooth surface, two steel blades with "L" type edge and small slotted perforations (1.15 x 0.07 cm)
Cylinder speed	S_1 S_2 S_3	380 rpm 600 rpm 820 rpm	The original recommended rpm range was 500 to 600 rpm
Counter pressure	P_1 P_2 P_3	14.8 g/cm^2 17.6 g/cm^2 20.4 g/cm^2	The counter pressure per cm^2 of outlet is controlled by moving the weight on the steel beam. Outlet area = 95.0 cm^2
Clearance**	C	0.5 cm	The same clearance was used for three combinations.**
Motor	three-phase	10 hp	Motor efficiency (ef) x power factor (pf) = 0.717.
Jet air blower	centrifugal fan	3300 rpm	Almost constant rpm was used for three machine combinations.

*Refer to the section A-A of Fig. 22.
**Combination I = Cylinder A + Screen A
Combination II = Cylinder B + Screen A
Combination III = Cylinder B + Screen B

Table 3. Capacity and plant utilization for manufacturing firms producing power tillers, Philippines 1974-75.

Firm	1974				1975			
	Rated Capacity per month (units)	Actual capacity per month (units)	Percent Utilization	Sales as percent of actual capacity	Rated Capacity per month (units)	Actual capacity per month (units)	Percent utilization	Sales as percent of actual capacity 1/
1	300	70	23	97	300	92	31	97 (116)
2					300	n.a.	n.a.	n.a.
3	n.a.	n.a.	n.a.	n.a.	500	n.a.	n.a.	n.a.
4	85	74	87	39	84	55	66	81
5	300	30	10	13	300	150	50	n.a.
6	350	267	76	25	350	292	83	14 (37)
7	n.a.	n.a.	n.a.	n.a.	500	n.a.	n.a.	n.a.
8					83	71	86	42
9					350	210	60	- (57)
10	50	12	24	86	50	12	24	58
11	120	10	8	20	120	50	42	10 (14)
Total	1,205	463	38 2/	40 3/	2,937	932	57 2/	38 (53) 3/

1/ As of July, 1975. Figures in parentheses are as of October, 1975. Percentage exceeds 100 because firm is a manufacturer-distributor and sells not only its own products but those of other firms as well.

2/ Average for firms with production data.

3/ Average for firms with sales data.

n.a. - not available

Sources: Individual reports of tractor manufacturing firms submitted to NFAC, Quezon City; Agricultural Machinery Dealers Association.

Table 4. Interest of farmers in using different mechanical equipment, 100 upland farmers, Southern Tagalog, 1975.

Equipment	No. of Farmers responding	% of Farmers interested
Tractor	100	58
Seeder	100	37
Chemical Sprayer	81[1/]	50
Weeder	100	63
Fertilizer Applicator	100	22
Irrigation Equipment	100	42
Harvester	100	30
Thresher	100	42

[1/] 19 farmers do not apply chemicals.

Table 5. General information on storage/warehousing, 64 rice mills, Central Luzon, 1973-74.

Item	Cono number	Cono percent	Kiskisan number	Kiskisan percent	All Mills number	All Mills percent
			mills reporting			
Number of mills	31	100	33	100	64	100
Mills with storage/warehouse	22	71	5	15	27	42
Mills without storage/warehouse	9	29	28	35	37	58
Type of warehouse						
Bonded	13	59	-	-	13	48
Not bonded	9	41	5	100	14	52
Type of storage						
Sack	20	91	4	80	24	89
Bulk	-	-	1	20	1	4
Sack and bulk	2	9	-	-	2	7
Owners of sack used for storage						
Mill owner	16	73	2	40	18	67
Depositors (farmer, wholesaler/ retailer)	5	23	3	60	8	29
Combination	1	4	-	-	1	4
Peak months of storage						
November	7	10	3	21	10	12
December	16	24	4	29	20	25
January	13	20	1	7	14	18
February	9	14	1	7	10	12
All other months	21	32	5	36	26	33
Lean months of storage						
July	5	11	1	7	6	10
August	7	16	1	7	8	14
September	7	16	1	7	8	14
October	5	11	1	7	6	10
All other months	20	46	10[1/]	72	30	52

[1/] March to June were the slack storage months at kiskisan mill sites.

Table 6. Problems in rice milling, 64 rice mills, Central Luzon, 1973.

Problems	Cono Number	Cono Percent	Kiskisan Number	Kiskisan Percent	All Mills Number	All Mills Percent
			mills reporting			
Total number of mills	31	100	33	100	64	100
Mills reporting no problem	3	10	1	3	4	6
Mills reporting problem	28	90	32	97	60	94
Financial/Technical						
High cost, durability and availability of spare parts	4	5	24	28	28	16
Frequent breakdowns due to impurities and foreign matters	12	14	11	13	23	13
High cost and availability of fuel and oil	7	8	14	17	21	12
High moisture paddy brought for milling	9	11	5	6	14	8
Inadequate capital to improve milling efficiency and enable trading	5	6	2	2	7	4
Deferred payment of milling fees	-	-	5	6	5	3
Adjustments in milling due to varietal differences and degrees of milling required	5	6	-	-	5	3
Frequent power failure	2	2	1	1	3	2
Availability of service mechanic in the area	3	3	-	-	3	2
Sub-total	47	55	62	73	109	63
Operational/Marketing						
Lack of paddy to be milled	4	5	8	9	12	7
Too demanding, dishonest customers	7	8	3	4	10	6
Competition from other mills	-	-	6	7	6	3
Distance and transportation problem	2	2	3	4	5	3
Price fluctuation	3	3	-	-	3	2
Over supply during peak months (no rest at all)	2	2	1	1	3	2
Sub-total	18	20	21	25	39	23
Organizational/Personnel						
Dishonest employees	3	3	-	-	3	2
High salary demanded	2	2	1	1	3	2
Availability of operator especially during peak season of milling	2	2	-	-	2	1
Sub-total	7	7	1	1	8	5
Government Policies/other Problems						
High taxes and fees	6	7	-	-	6	3
Too much government requirement and regulations	4	5	1	1	5	3
Imposition of ceiling price for palay but not on milled rice	5	6	-	-	5	3
Sub-total	15	18	1	1	16	9
TOTAL	87 1/	100 2/	85 1/	100 2/	172 1/	100 2/

1/ Some reported more than one problem.
2/ Number based on total responses.

Table 7. Industrial Extension staff and cooperators.

USAID Industrial Extension Project Leaders

John A. McMennamy
IRRI, P. O. Box 933
Manila, Philippines

Mr. Stewart Barton
c/o The Rockefeller Foundation
P. O. Box 2453
Bangkok, Thailand

Dr. Amir U. Khan
IRRI/PAK
c/o LAPSA, P. O. Box 1237
Islamabad, Pakistan

Industrial Extension Subcontract Program Officers

Dr. K. N. Singh, Head
Agricultural Engineering Dept.
G. B. Pant University of
Agriculture & Technology
Pantnagar, Distt. Nainital
Uttar Pradesh, India

Mr. R. Dadang Tarmana
Project Officer
Directorate of Food Crops
Production
Department of Agriculture
Pasar Minggu, Jakarta
Indonesia

Dr. Sung Kum Han, Director
Institute of Agricultural
Engineering & Utilization
Office of Rural Development
Suwon, Korea

Mr. S. Kathirkamathamby
Superintending Engineer
Engineering Research & Development
Division
Department of Agriculture
Peradeniya, Sri Lanka

Mr. Chak Chakkaphak
Senior Agricultural Officer
Thai-IRRI Subcontract
Engineering Division
Department of Agriculture
Bangkhen, Bangkok
Thailand

Unfunded Cooperative Linkages

Dr. Robert Bosshart
General Manager
Instituto de Pesquisas (IRI)
Av. Vieira de Carvalho, 40 - 11.°
And., 01210 Sao Paulo S. P.
Caixa Postal 9068, Brazil

Mr. Loyd Johnson
Agricultural Engineer
Centro Internacional de
Agricultura Tropical
Cali, Colombia

Mr. Ahmed Bahgat
Agricultural Engineering Specialist
The Ford Foundation
P. O. Box 2344, Cairo
Egypt

Mr. Ray Wijewardene
Farming Systems Engineer
International Institute of Tropical
Agriculture (IITA)
Oyo Road, P. M. B. 5320
Ibadan, Nigeria

Mr. Fred E. Nichols
Agricultural Engineer
Bangladesh Rice Research Institute
GPO Box 64, Ramna
Dacca, Bangladesh

Dr. Teh Hock Heng, Director
Standards & Industrial Research
Institute of Malaysia
P. O. Box 35, Shah Alam
Selangor, Malaysia

Table 8. Almost 14,000 IRRI-designed machines were commercially produced in eight nations[a] in 1975.

Country	Manufacturers	Machines (No.)				
		5- to 7-hp tiller	Axial flow thresher	Batch dryer	Power Weeder	Multi-hopper seeder
Ghana	1	0	15	0	0	0
India	1	0	60	0	0	0
Japan	3	0	0	0	11,000	0
Pakistan	1	0	2	0	0	0
Philippines	14	2,178	275	33	0	56
Sri Lanka	2	60	0	0	0	0
Taiwan	1	0	0	200	0	0
Thailand	3	69	10	0	0	0
TOTAL	26	2,307	362	233	11,000	56

[a] Does not include pre-production prototype machines produced by companies in India, Indonesia, Thailand, Guyana, Colombia, Ecuador, Philippines, Bangladesh, Malaysia, Egypt, and Sri Lanka.

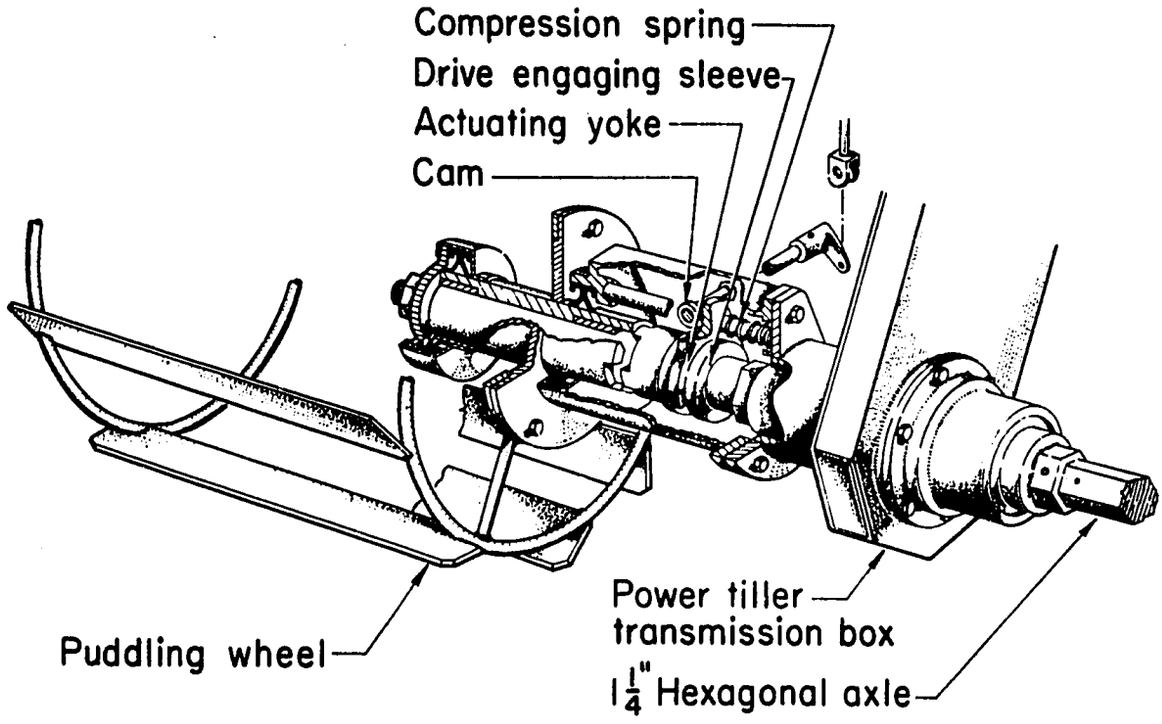

Fig. 1 Totally enclosed steering clutch.

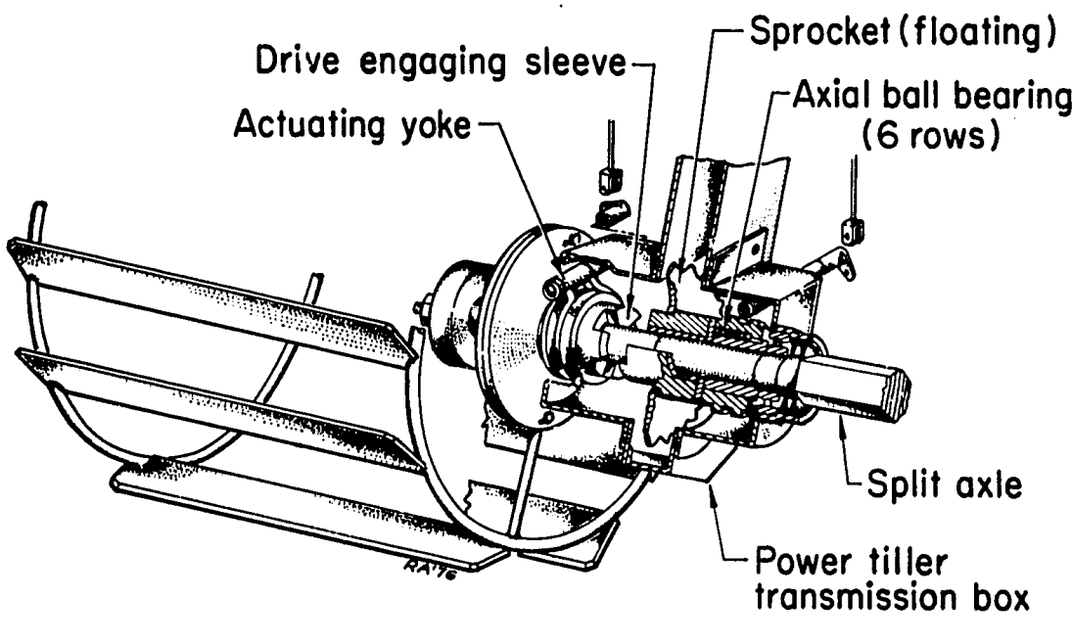

Fig. 2 Enclosed with axial ball bearing.

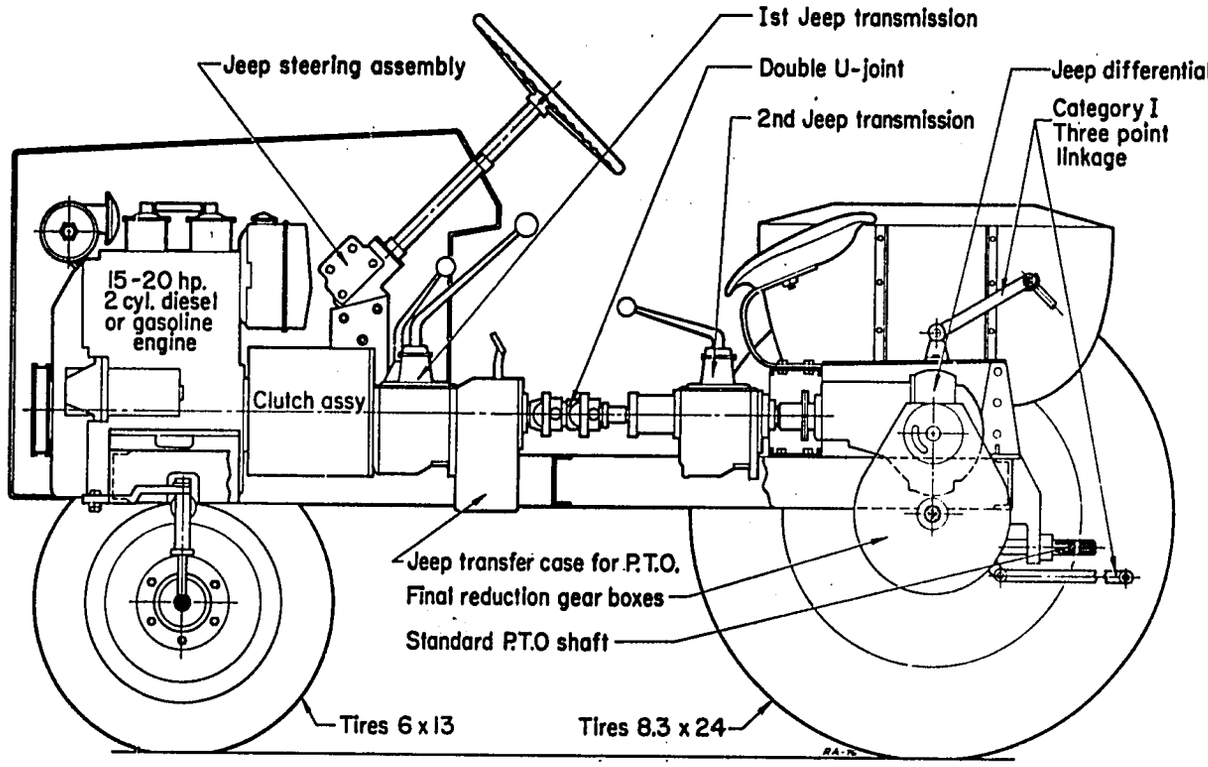

Fig. 3 Small low-cost, 4-wheel tractor.

Fig. 4 Liquid injector showing skid and nozzles.

Fig. 5 Liquid injector in the field.

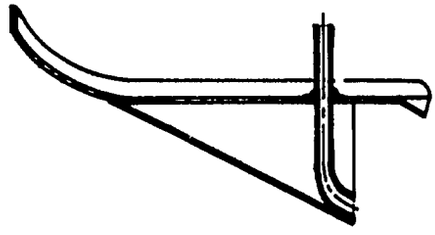

90° opening at the rear

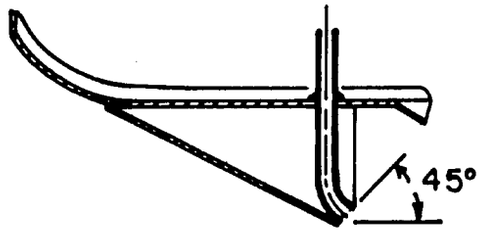

45° opening at the rear

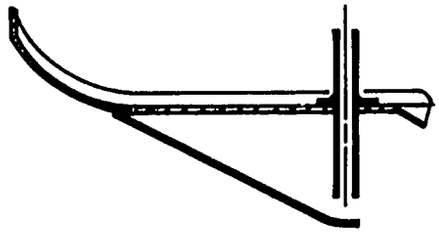

Detachable injector
opening downward but shielded below

Fig. 6 Liquid injector nozzle designs.

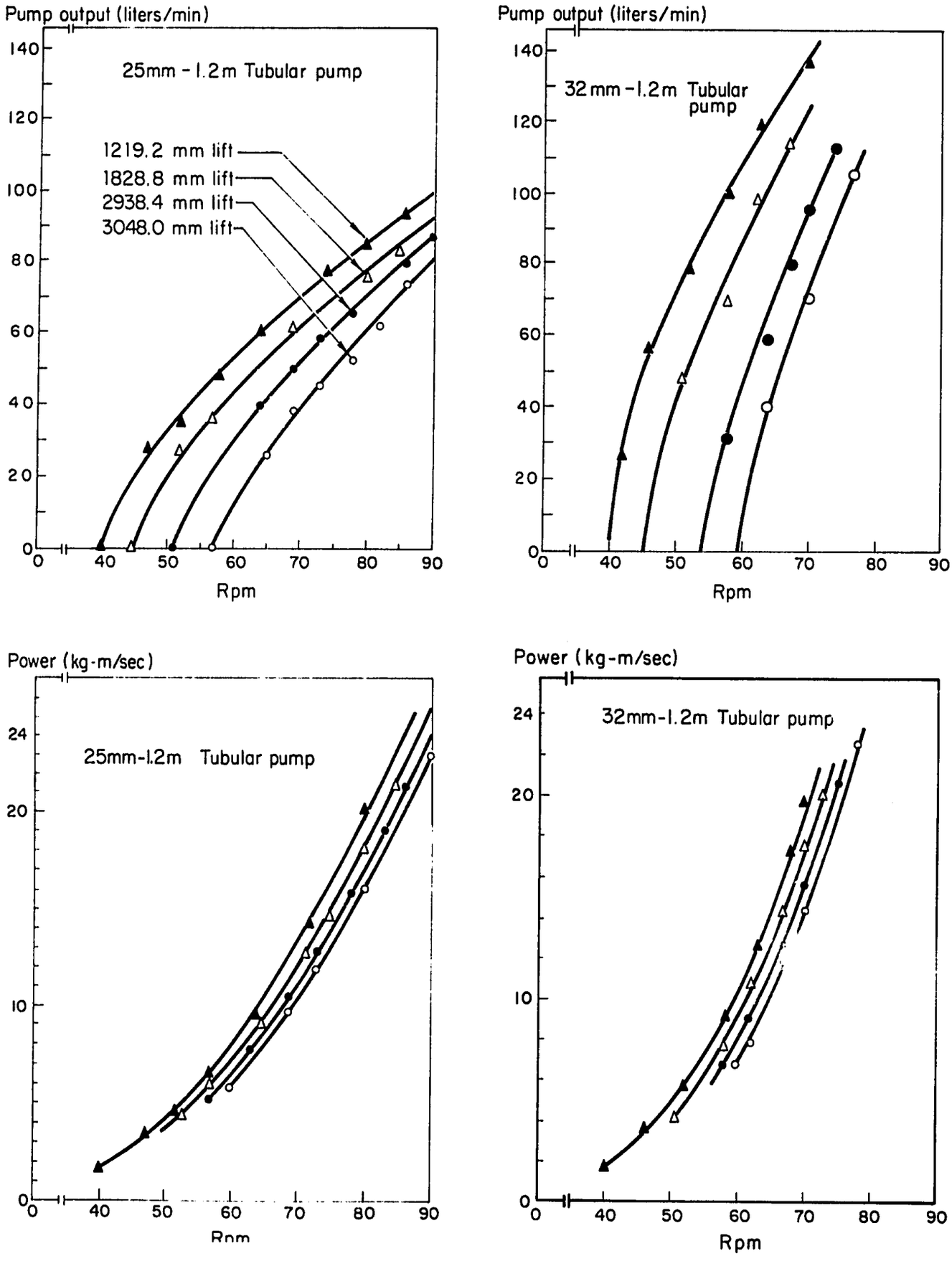

Fig. 7 Tubular pump performance.

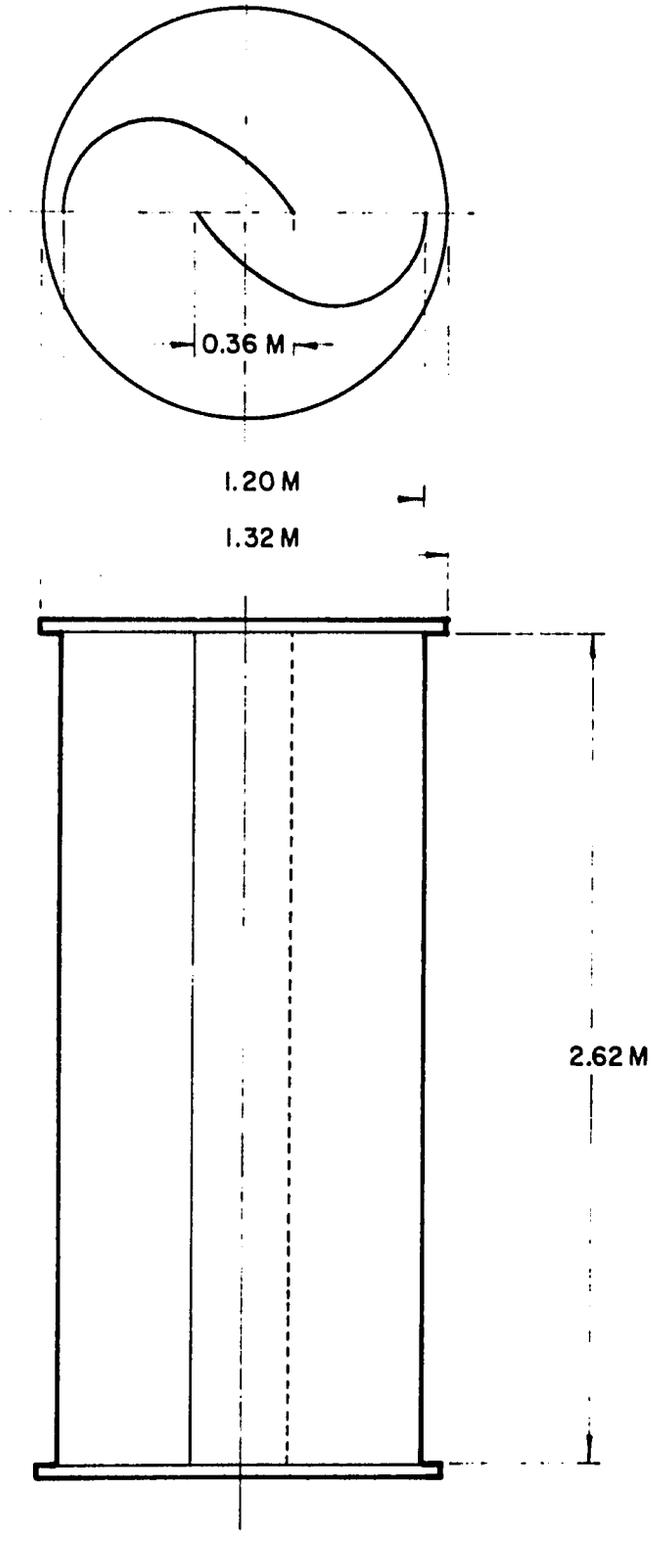

Fig. 8 Improved Savonius rotor.

Fig. 9 Truck-mounted windmill test stand.

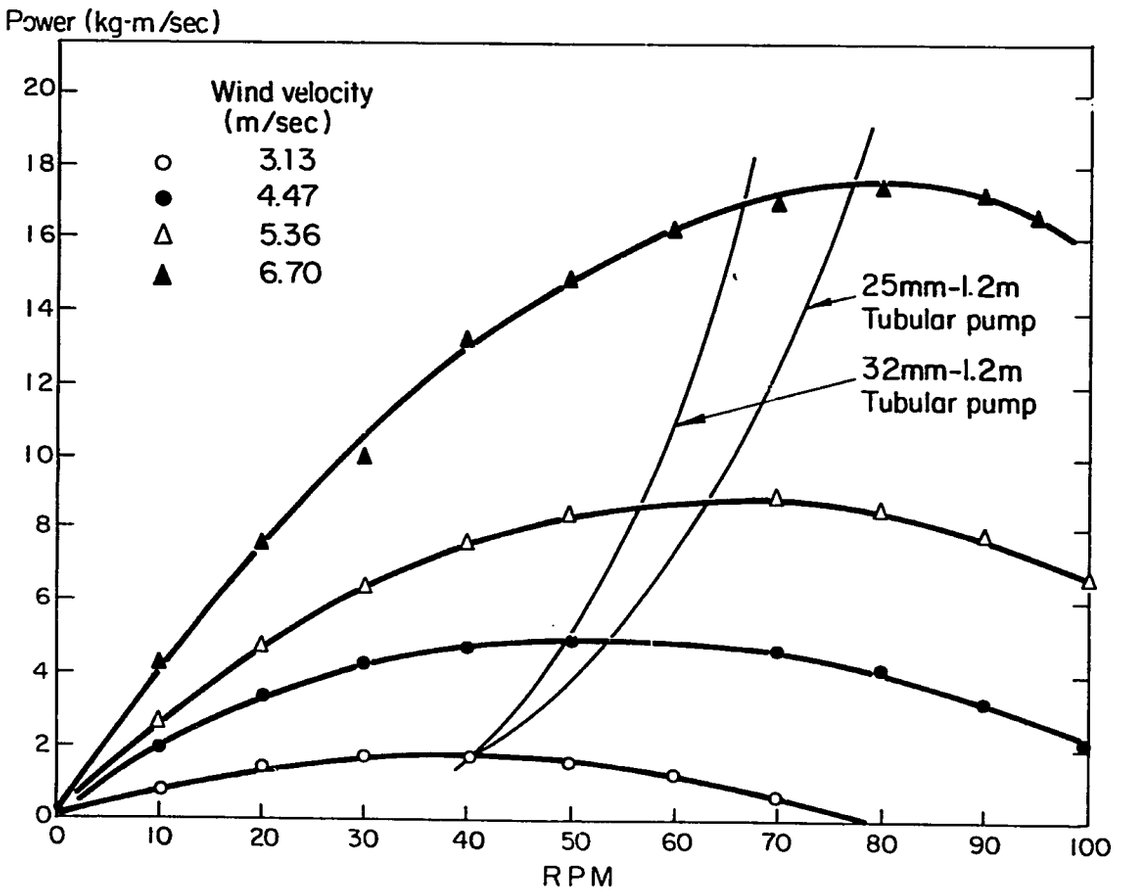

Fig. 10 Windmill power curves for 4 wind velocities.

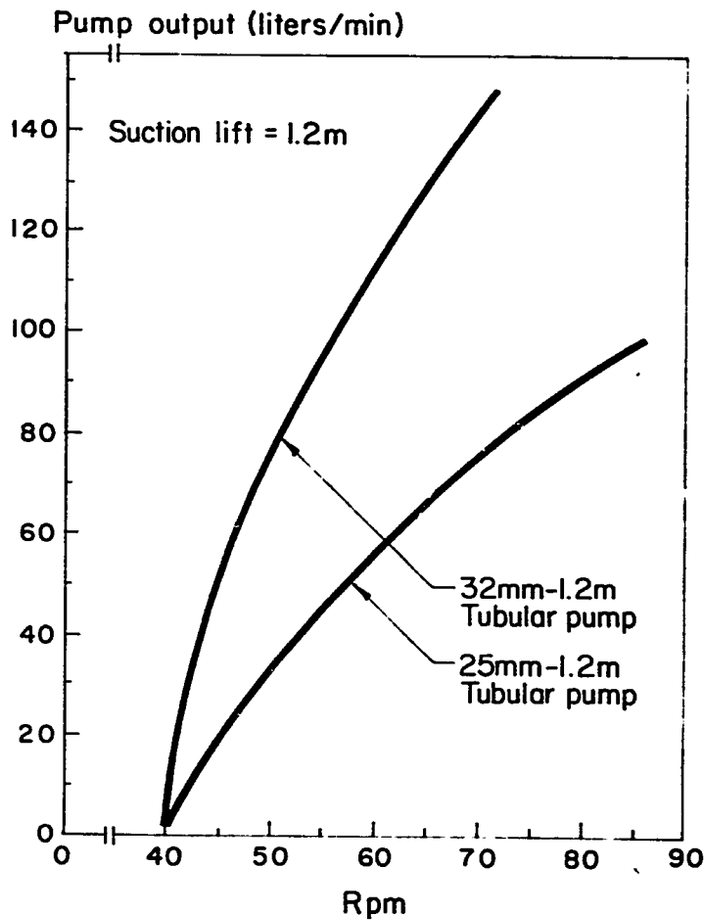

Fig. 11 Tubular pump outputs at 1.2 m lift.

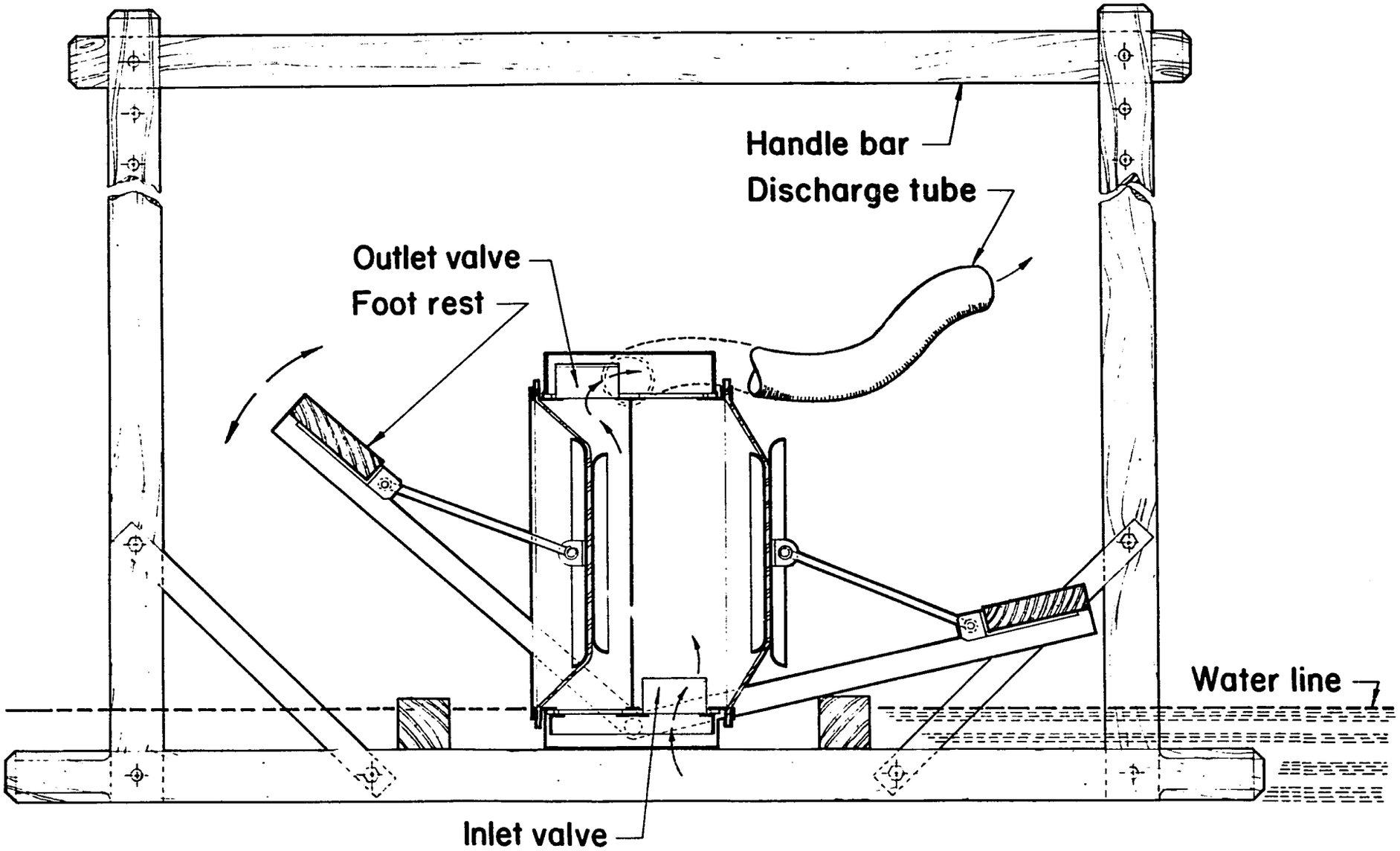

Fig. 12 Diaphragm pump.

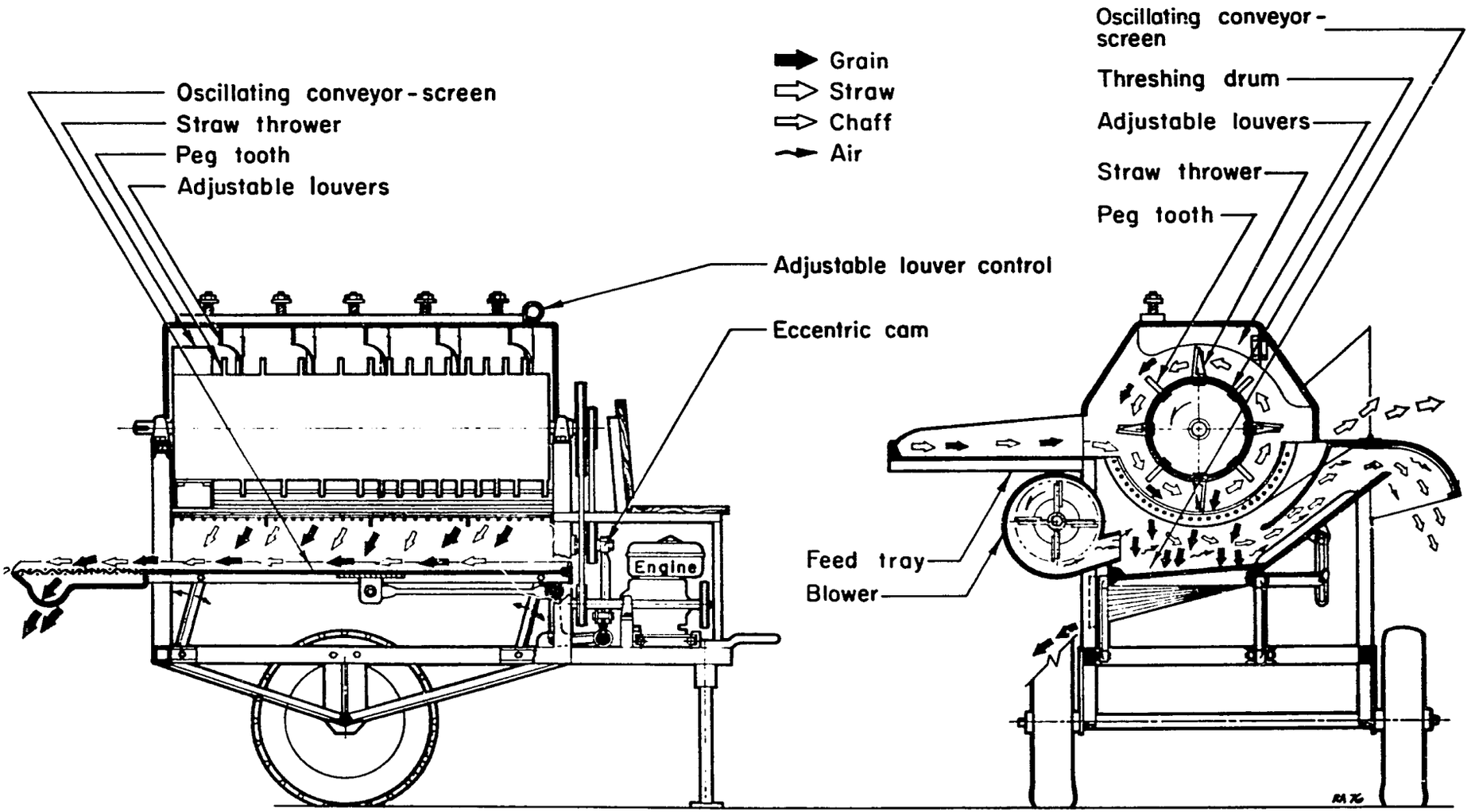

Fig. 13 Schematic of an axial flow thresher with oscillating screen.

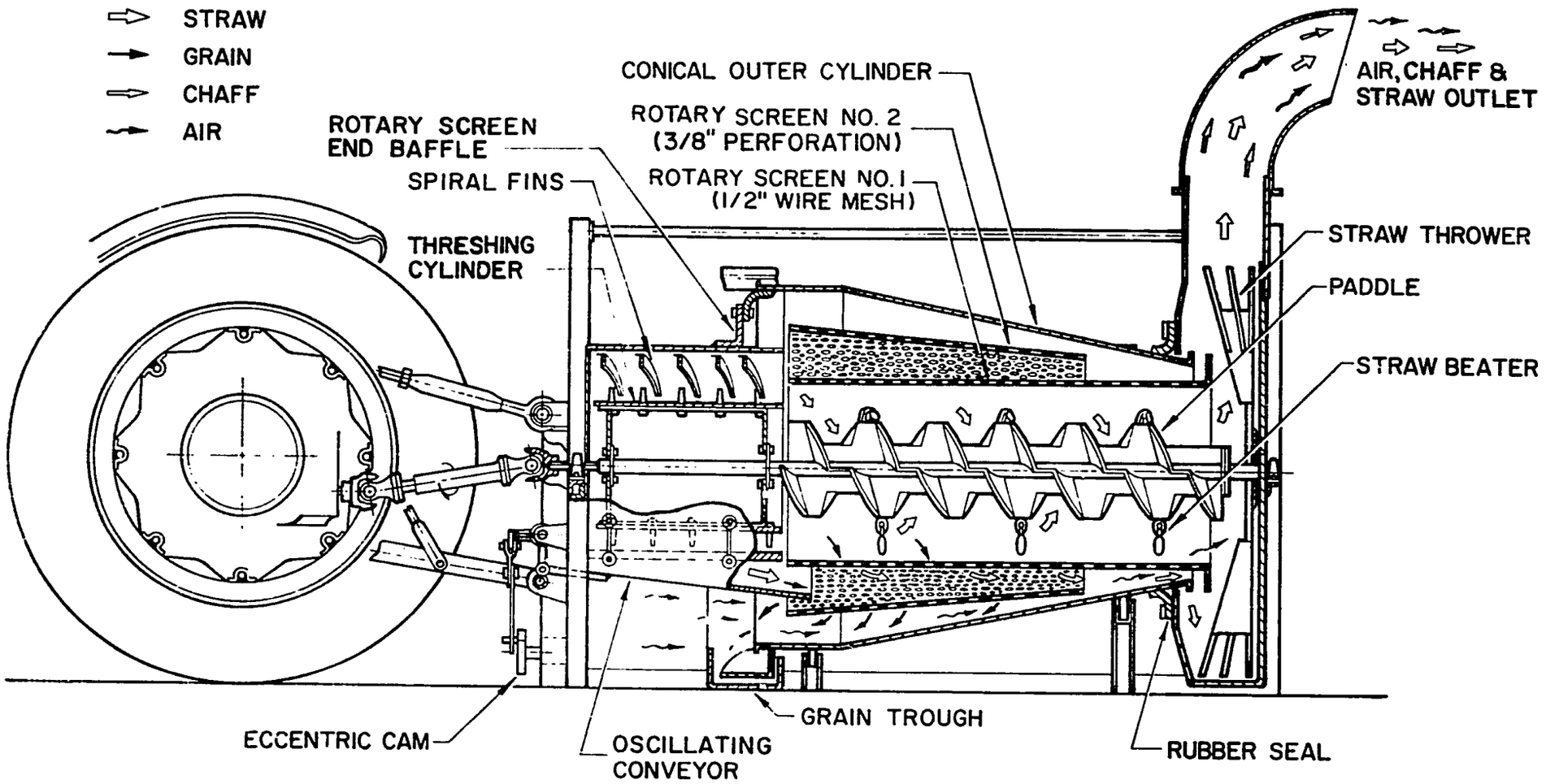

Fig. 14 Schematic of modified tractor PTO-driven thresher.

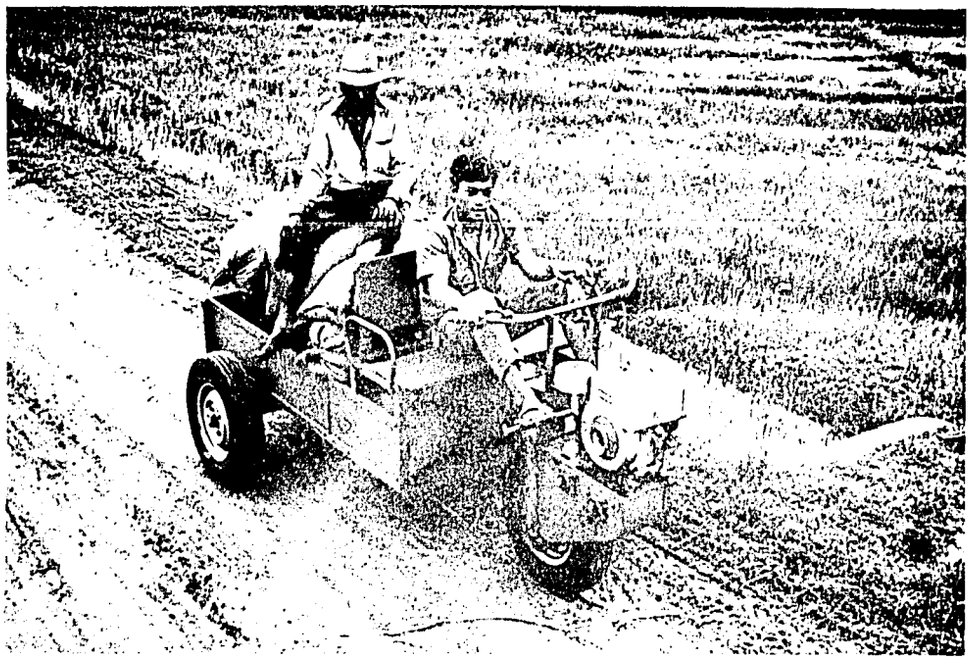

Fig. 15 Self-propelled thresher-cart in cart configuration.

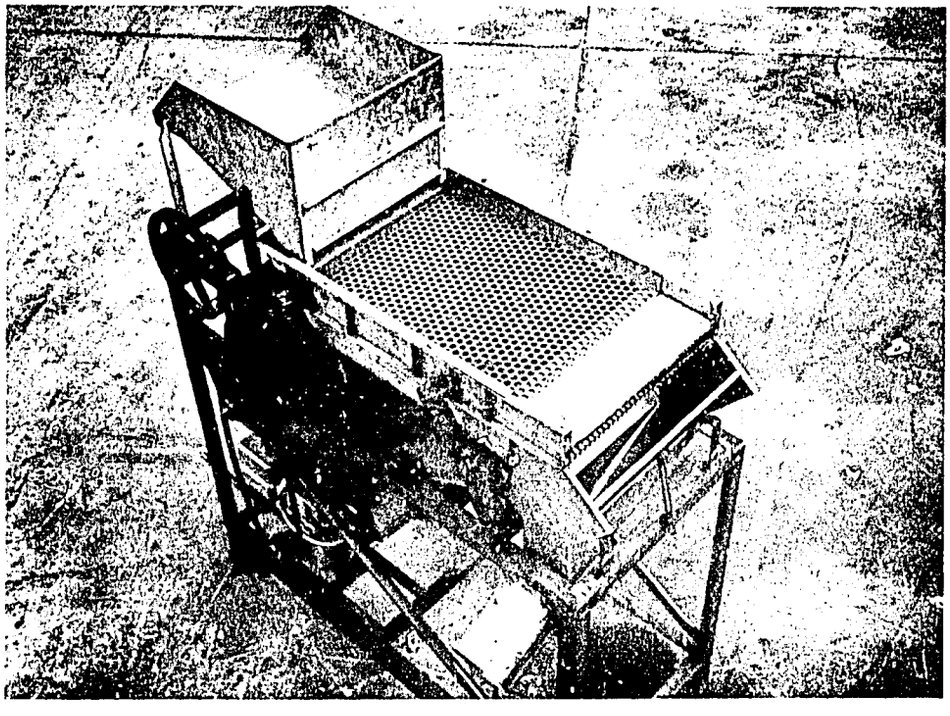

Fig. 16 Small oscillating grain cleaner.

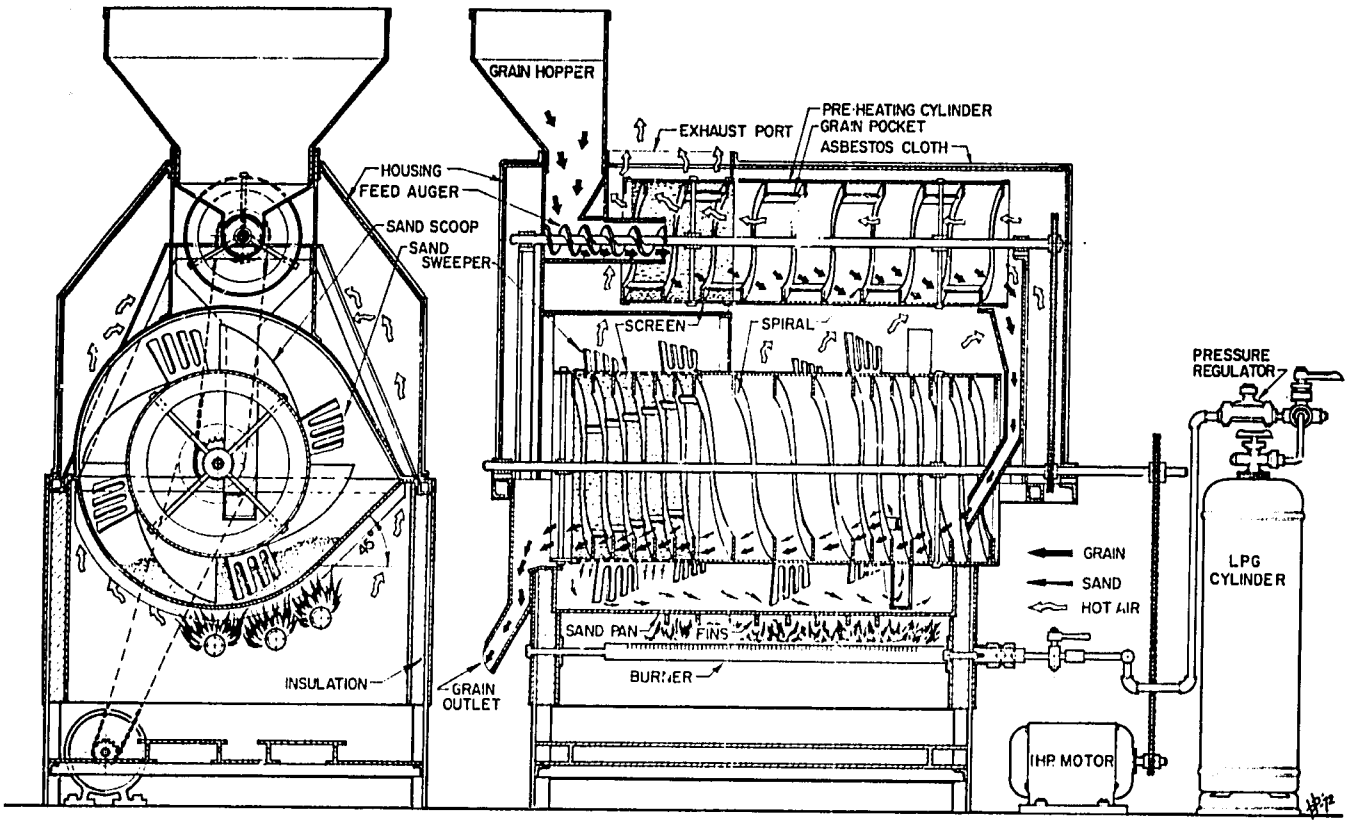

Fig. 17 Sand parboiler.

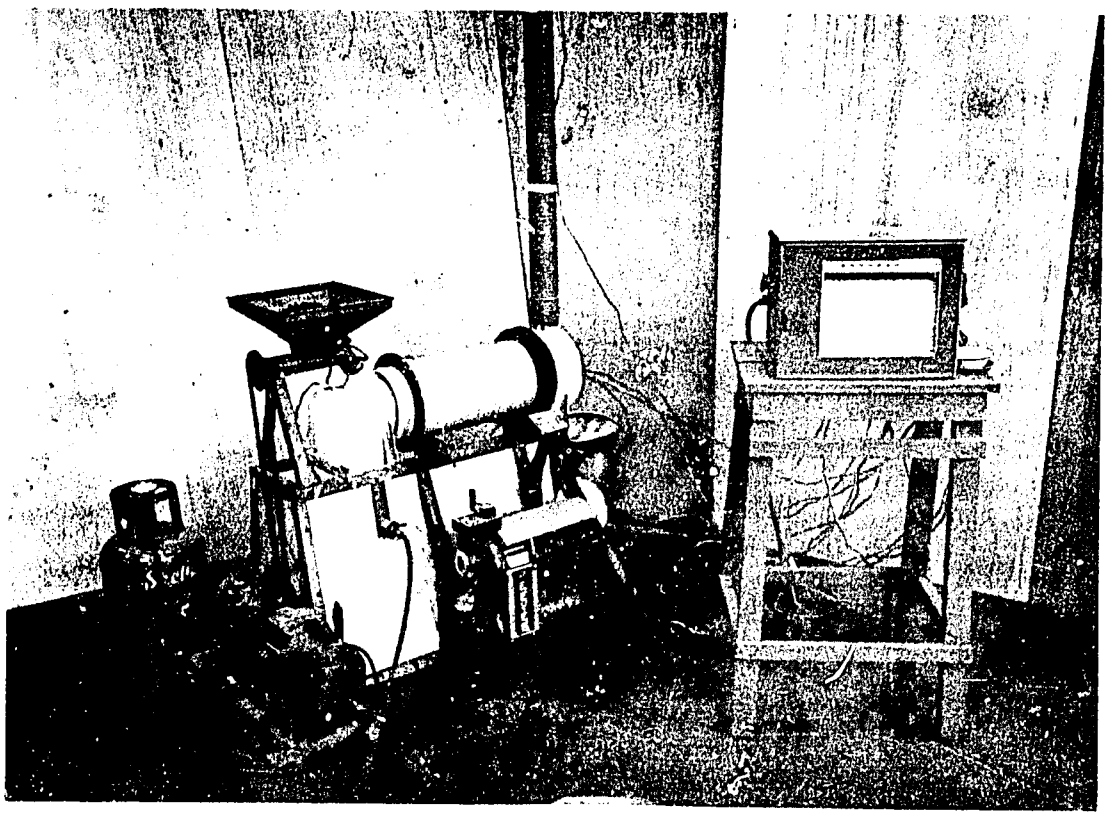

Fig. 18 Parboiling machine.

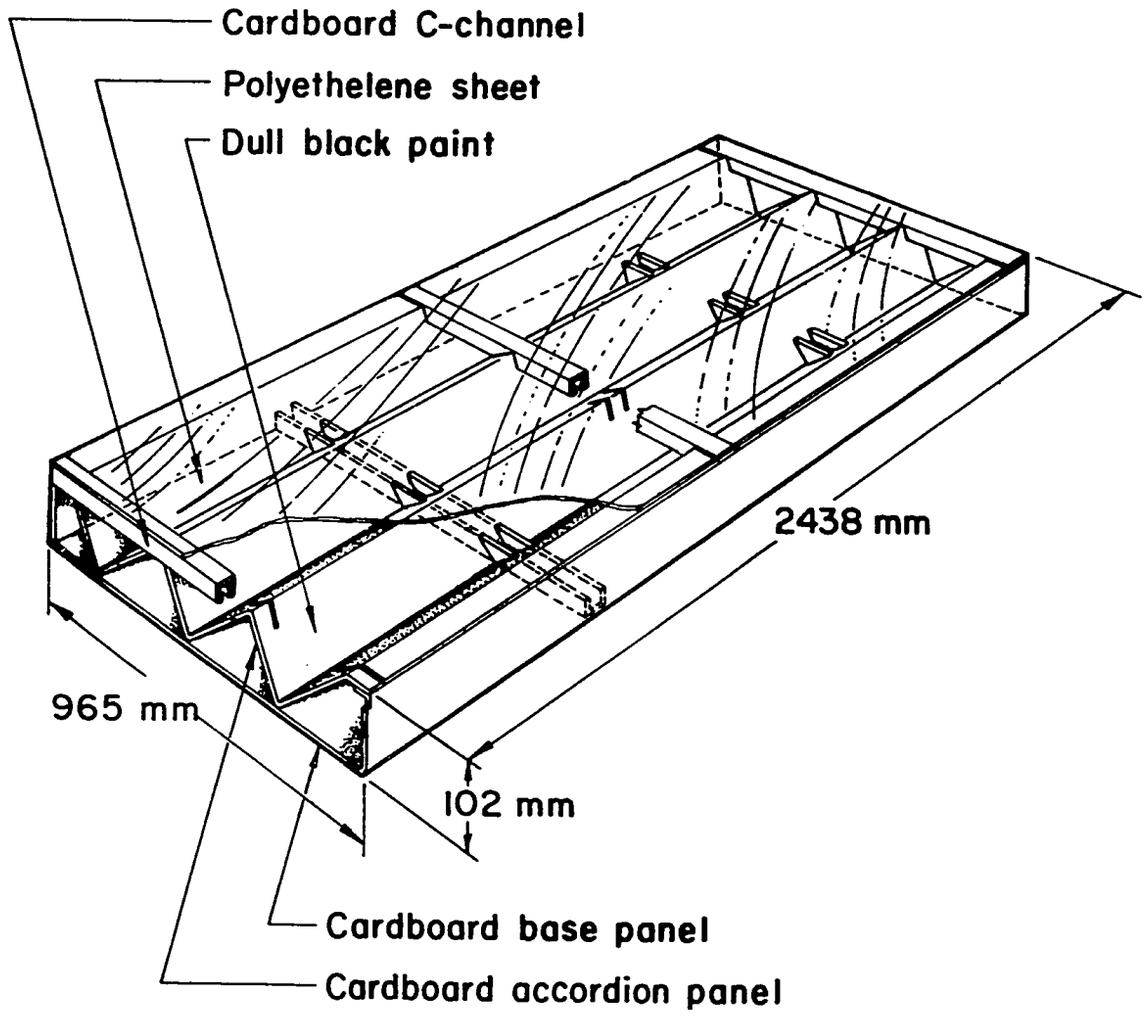

Fig. 19 Corrugated cardboard solar panel.

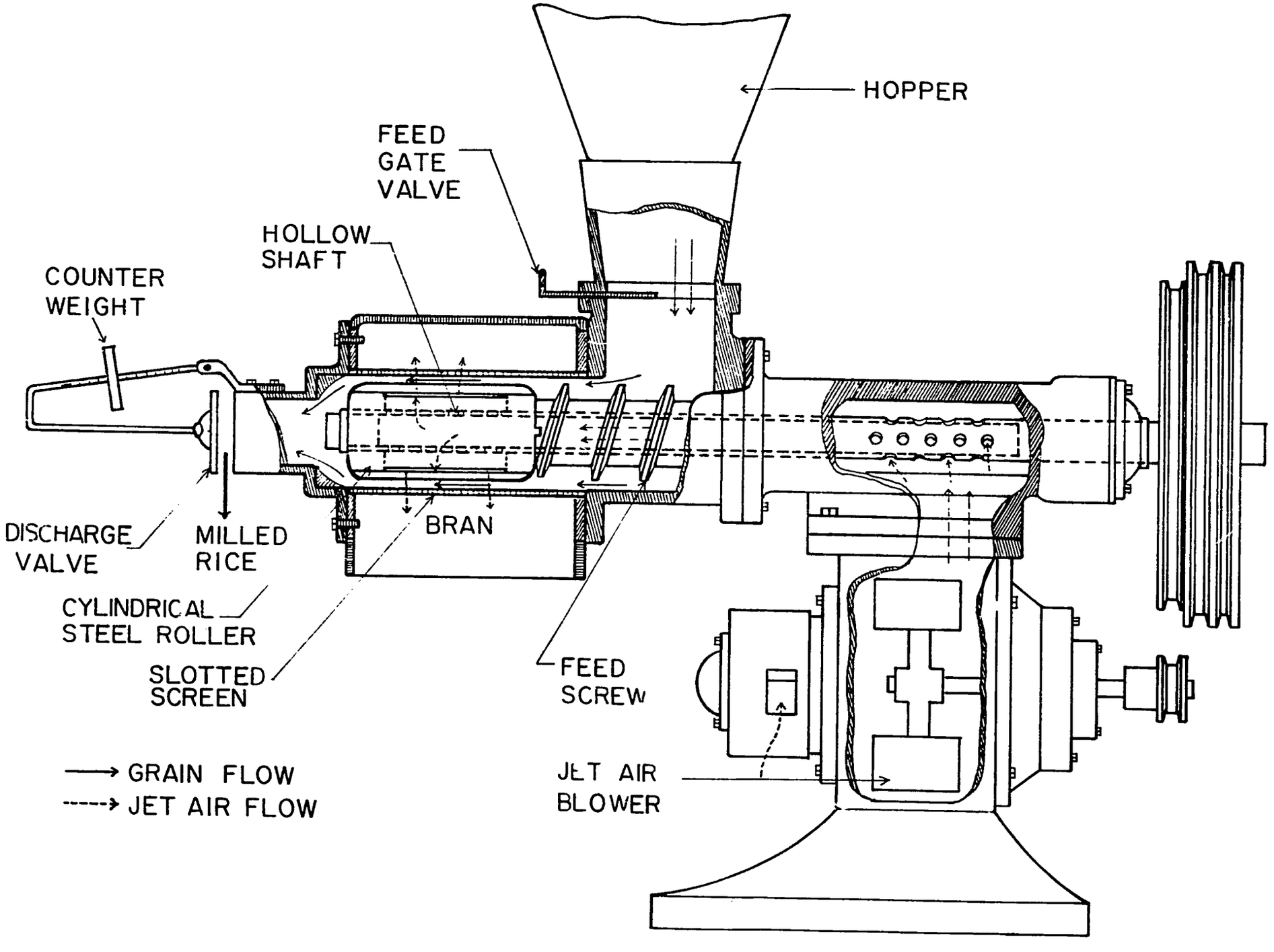

Fig. 20 Schematic of rice whitening machine.

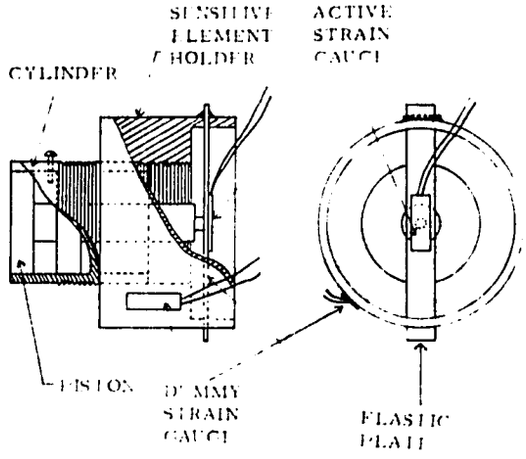

Fig. 21 Schematic of load cell.

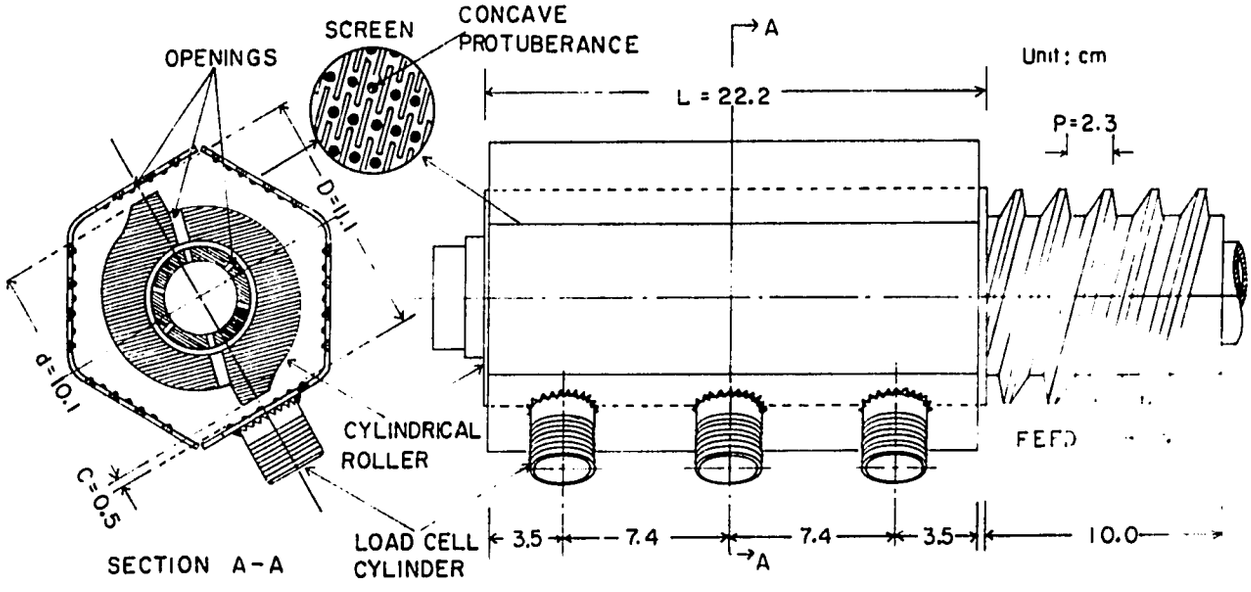

Fig. 22 Load cell placement on the screen.

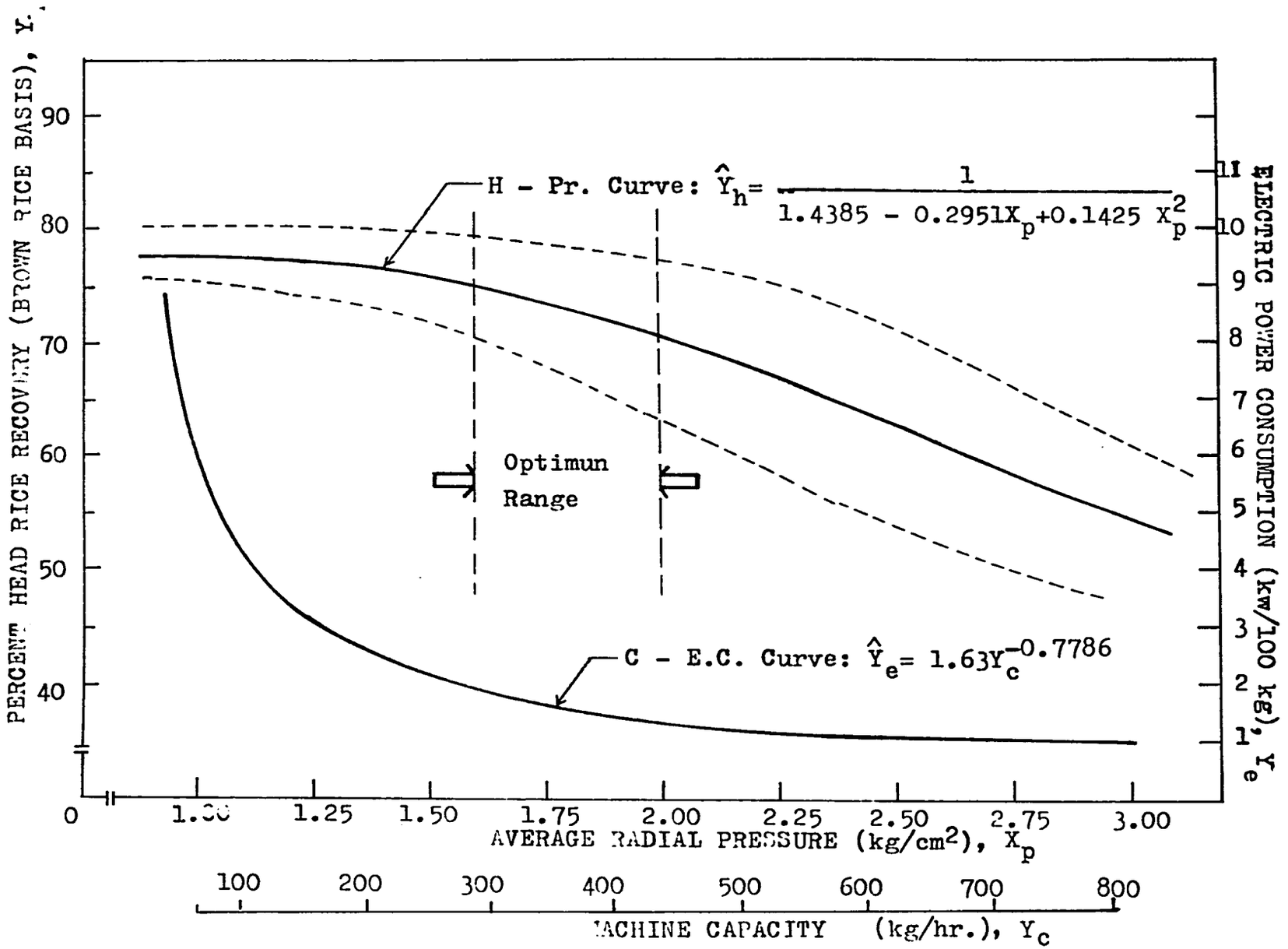

Fig. 23 An empirical characteristic curve for a rice whitening machine.

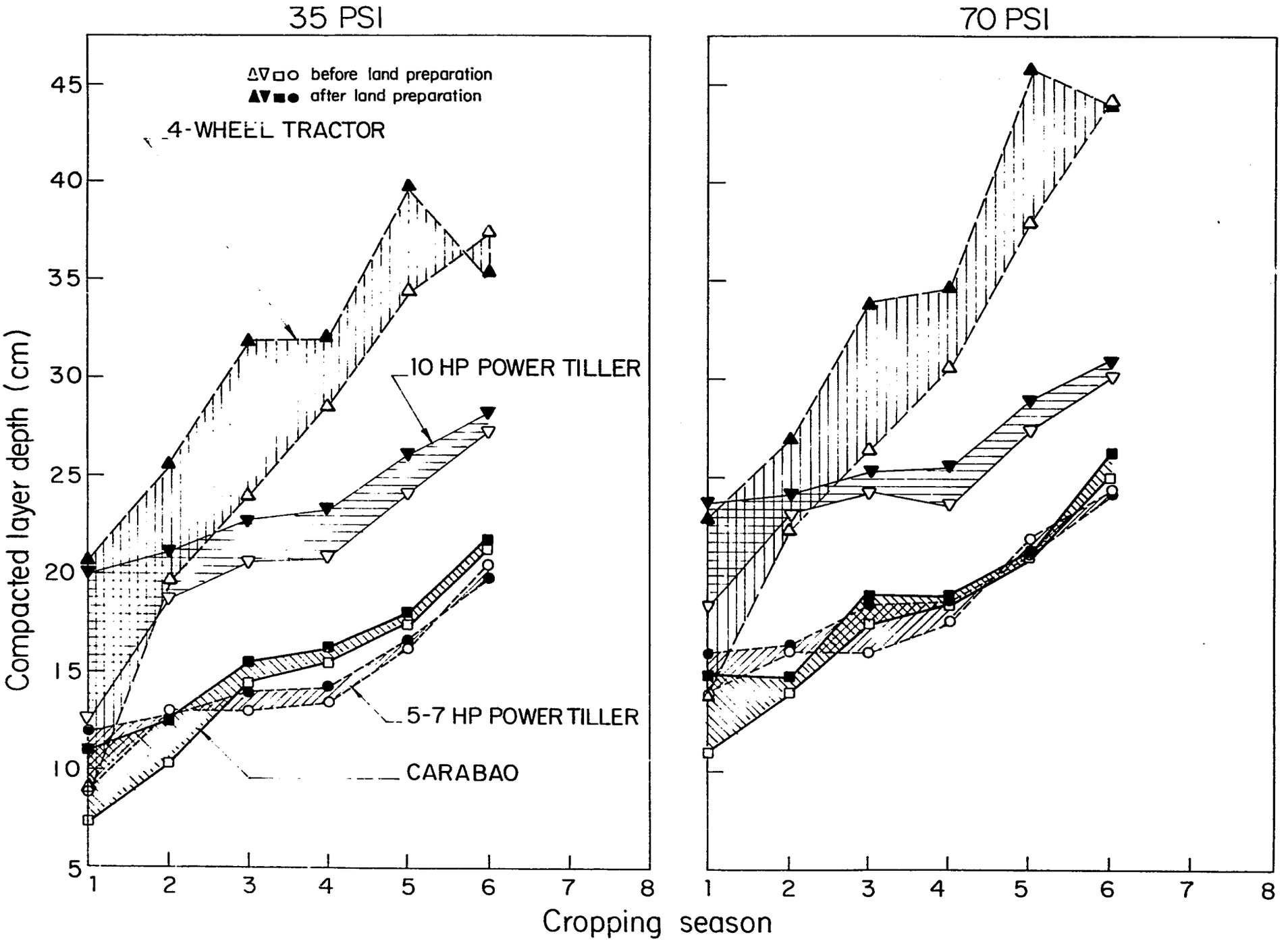

Fig. 24 Compacted layer depth under different tillage systems.

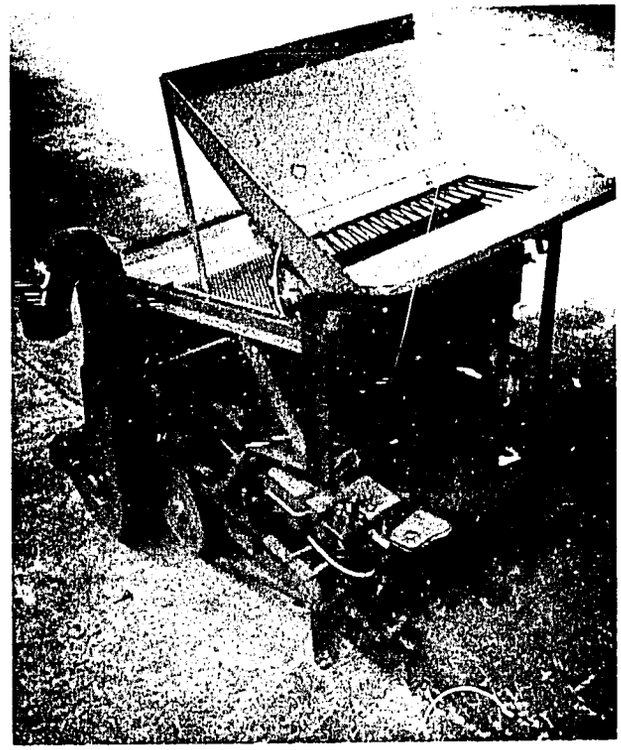

Fig. 25 Large oscillating grain cleaner.

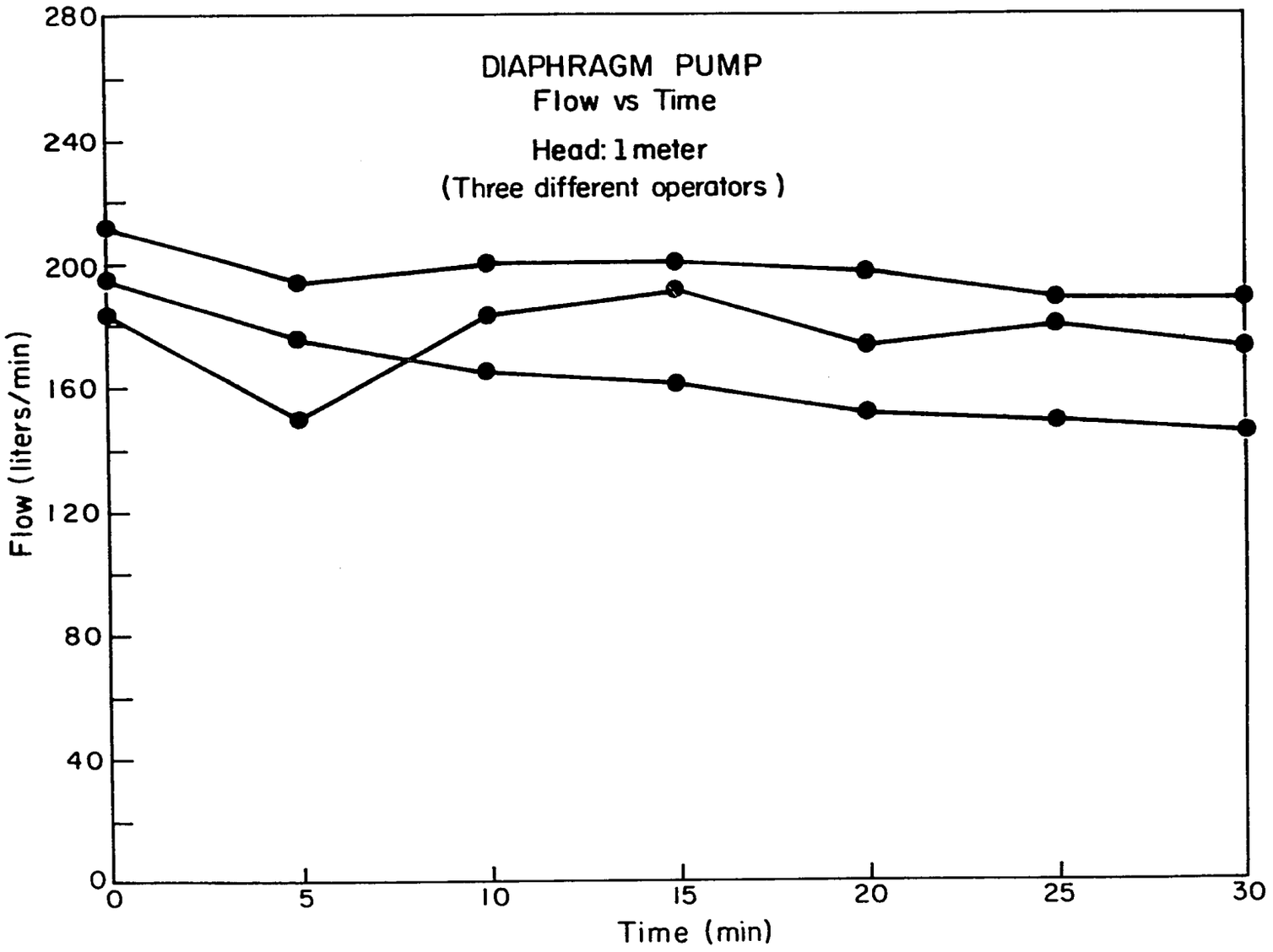

Fig. 26 Diaphragm pump output.

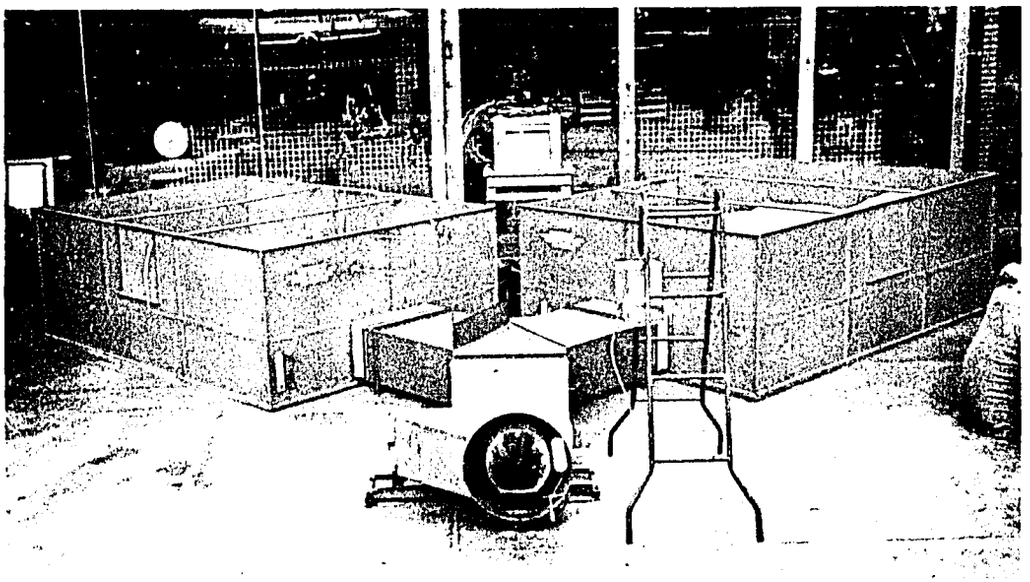

Fig. 27 Twin bed batch dryer.

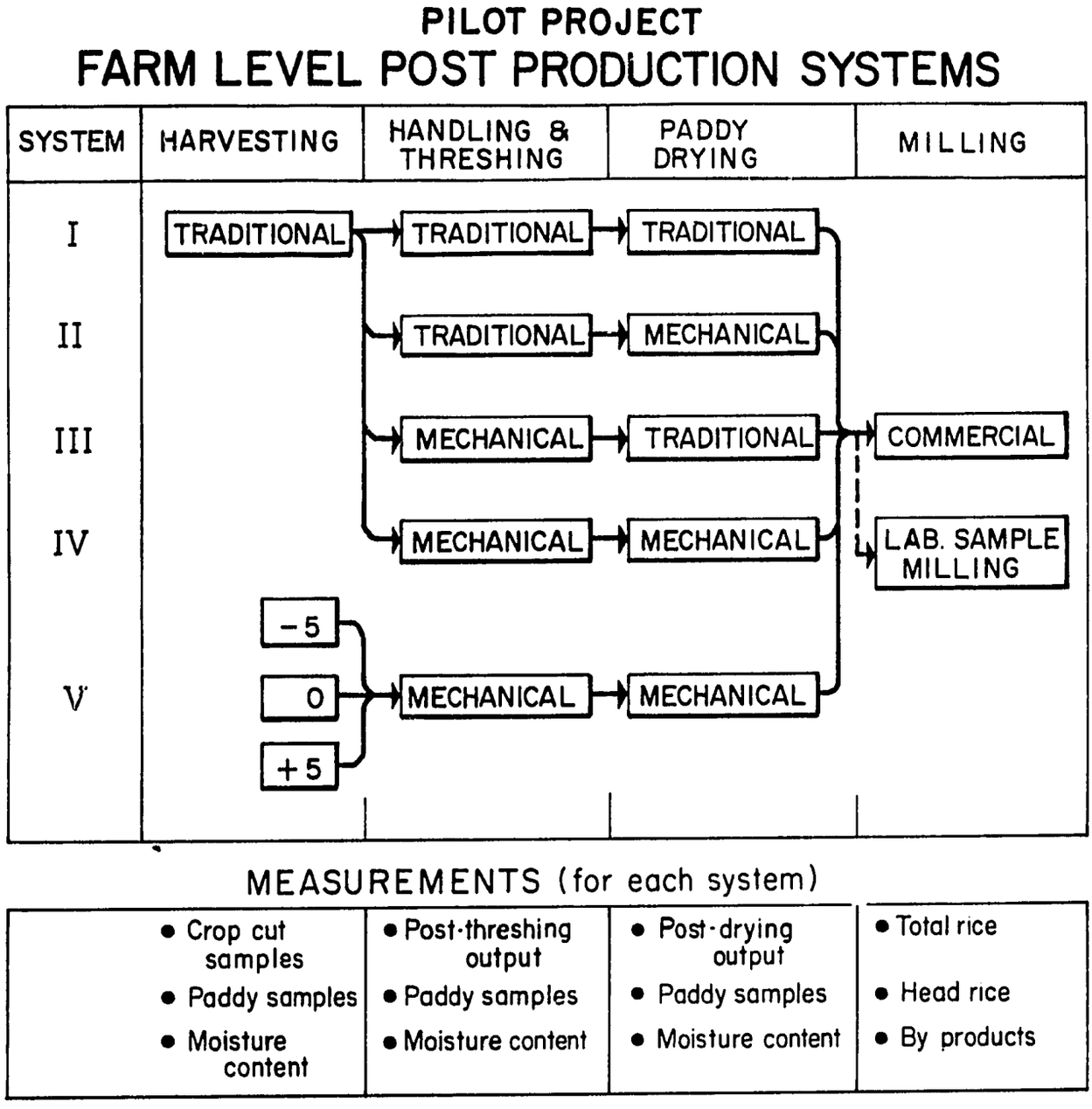

Fig. 28 Farm level post-production systems.

Philippines

Name	Position	Starting Date*
John A. McMennamy	Industrial Liaison Engineer	July 26, 1975
Simeon A. Gutierrez	Senior Research Assistant	June 30, 1975
Nemelito Langam	Senior Research Assistant	March 1, 1976
Rodulfo Angco	Draftsman	October 1, 1975
Felicisima Q. Barrera	Secretary	October 16, 1975

Thailand

Stewart Barton	Industrial Extension Engineer	March 1, 1976
Suwit Bunyawanichkul	Engineer	January 1, 1976
- open -	Mechanic	-
- open -	Mechanic	-
Chalit Chuansombat	Shop Assistant	January 1, 1976
- open -	Shop Assistant	-
- open -	Secretary	-

Pakistan

Dr. Amir U. Khan	Industrial Extension Engineer	April 1976
- open -	Engineer	-
- open -	Mechanic	-
- open -	Mechanic	-
- open -	Shop Assistant	-
- open -	Shop Assistant	-
- open -	Secretary	-

*Starting dates after December 31, 1975 are tentative.

Fig. 29 Industrial Extension Project staff.