AGENCY FOR INTERNATIONAL DEVELOPMENT
WASHINGTON, D. C. 20523

BIBLIOGRAPHIC INPUT SHEET

FOR AID USE ONLY
Batch 31

1. SUBJECT CLASSIFICATION

A. PRIMARY: Agriculture — AA00-0000-0000

B. SECONDARY: General

2. TITLE AND SUBTITLE

Simulation of aggregate loan repayment policies using the variable distributed time delay

3. AUTHOR(S)

Manetsch, T.J.

4. DOCUMENT DATE	5. NUMBER OF PAGES	6. ARC NUMBER
1974	18p.	ARC

7. REFERENCE ORGANIZATION NAME AND ADDRESS

Mich. State

8. SUPPLEMENTARY NOTES *(Sponsoring Organization, Publishers, Availability)*

(In Project working paper no.74-1)

9. ABSTRACT

10. CONTROL NUMBER

PN-AAB-786

11. PRICE OF DOCUMENT

12. DESCRIPTORS

Project planning
Sector analysis
Simulation

13. PROJECT NUMBER

14. CONTRACT NUMBER

CSD-2975 Res.

15. TYPE OF DOCUMENT

AID 590-1 (4-74)

CSD-2975 Rec
PN-AAB-786

AGRICULTURAL SECTOR ANALYSIS

AND SIMULATION PROJECTS

Contract AID/csd-2975

Simulation of Aggregate Loan Repayment Policies Using the Variable Distributed Time Delay

Project Working Paper 74-1

Prepared By:

Thomas J. Manetsch

March 1974
Michigan State University
East Lansing, Michigan

SIMULATION OF AGGREGATE LOAN REPAYMENT POLICIES USING THE VARIABLE DISTRIBUTED TIME DELAY

In macro-economic simulation models it is sometimes of interest to model the processes of borrowing and debt retirement. The emphasis in these cases is upon an aggregate borrowing rate, the aggregate value of outstanding loans, the aggregate unpaid balance, the aggregate repayment rate, the aggregate interest charges and so forth. At the micro (individual loan) level these processes are very straightforward and easy to describe mathematically. At a macro level things are not so simple. In this discussion we will describe an approach to this aggregate modeling problem which uses the time varying distributed delay. In what follows we will describe the theory of the model, its computer simulation, and results obtained from computer runs.

Theory of the Model

For an individual loan the basic equation that describes the repayment process is:[1/]

$$1)\quad \frac{dBAL(t)}{dt} = (X(t) - RINT*BAL(t)) \qquad BAL(t) \geq 0$$

where:

BAL = the unpaid loan balance ($)

X = the payments to principle and interest ($/yr)

RINT = the interest rate on a continuously compounded basis (%/yr).

Assuming fixed payments to principle and interest, X, the solution to this equation (obtained by Laplace transform or other methods) is:

[1/] This assumes interest compounded continuously.

2) $BAL(t) = (BAL(0) - X/RINT)e^{RINT*t} + X/RINT$

where:

BAL(0) is the original unpaid balance (the size of the loan taken out). Continuing with the assumption of fixed payments to principle and interest, X, we can solve for the length of the loan, DELRP, from:

3) $0 = (BAL(0) - X/RINT)e^{RINT*DELRP} + X/RINT$

Solving this equation for DELRP we get:

4) $DELRP = (\ln(X/RINT) - \ln(X/RINT - BAL(0))/RINT$
$(X > RINT*BAL(0))$

where:

ln is the natural logarithm. Alternatively, for a fixed repayment period DELRP, we can solve Equation (3) for the corresponding fixed payments to principle and interest, X:

5) $X = (BAL(0)*RINT*e^{RINT*DELRP})/(e^{RINT*DELRP}-1)$

These equations give us insights which are helpful in developing a macro model appropriate for the case of many outstanding loans, aggregate borrowing rates, repayment rates, etc. Consider the block diagram of Figure (1). In this diagram the variable BR is the aggregate borrowing rate ($/yr). As shown, this variable is also the input to the delay function. The output of the delay is the rate at which loans have been paid off. The loans which are inside the delay are loans which still require principle and interest for their retirement. This is the variable TOL in Figure (1) which is calculated as:

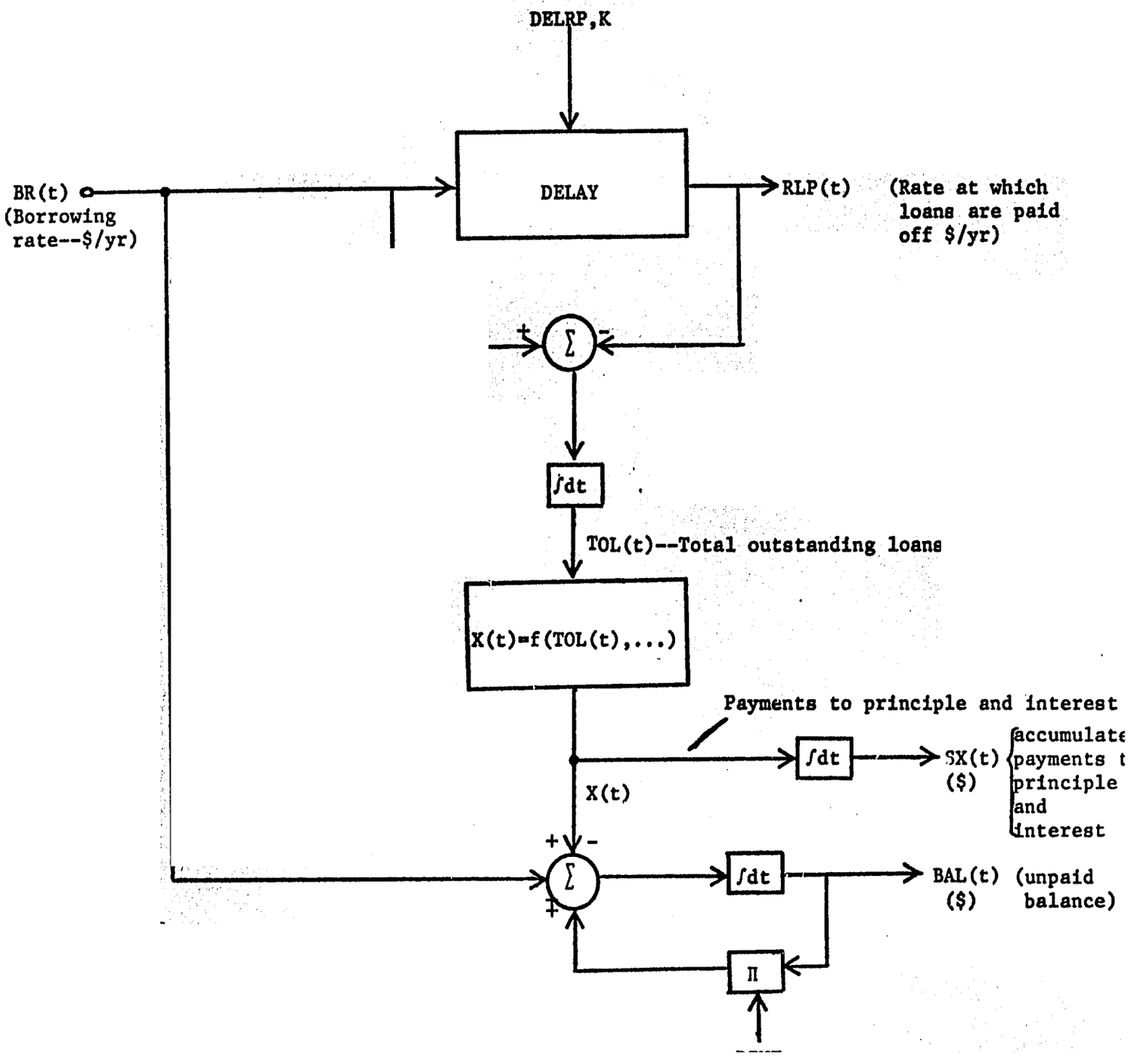

Figure 1. Block diagram of aggregate loan repayment process.

6) $TOL(t) = TOL(0) + \int_0^t (BR(x) - RLP(x))dx$

where:

TOL = total value of outstanding loans ($)

BR = borrowing rate ($/yr)

RLP = rate at which loans are paid off ($/y

Payments to principle and interest, X are clearly a function of the variable TOL as shown in the figure. Under the assumption that, for individual loans, payments to principle and interest are constant over the life of the loan, the variable X is computed as:

7) $X(t) = (TOL(t)*RINT*e^{RINT*DELRP})/(e^{RINT*DELRP}-1)$

This follows from Equation (5) and the fact that for an individual loan the variable BAL(0) corresponds to the "total value of outstanding loans." In general, we do not wish to be restricted to the assumption of constant payments to retire individual loans. We will consider this broader issue a little later.

In this aggregate case we can allow for an arbitrarily changing borrowing rate by writing:

8) $\frac{dBAL(t)}{dt} = -(X(t) - RINT*BAL(t) - BR(t))$

in place of Equation (1). (The corresponding equation for a single loan taken out at a single point in time.) This is the formulation shown in Figure (1).

The model of Figure (1) also allows for the computation of the total payments to principle and interest--an important variable in evaluating

alternative debt retirement policies. This variable, denoted SX, is computed as:

9) $SX(t) = SX(o) + \int_0^t X(r)dr$

Before going on to discussion of how this model can be modified to permit payments to principle and interest which can vary over the life of individual loans, let us further discuss the real world implications of the aggregate model of Figure (1). If the delay in this figure is distributed the model simulates the case where the lengths of individual loans have an Erlang distribution with mean DELRP and parameter K. This means that the variance of individual loans is $(DELRP)^2/K$. (See Chapter 12, Manetsch and Park.) It should be pointed out that the aggregate model of Figure (1) is exact only when $K = \infty$ (this means that the delay process is discrete, i.e., all loans have the same length--DELRP). Useful results have been obtained when K is on the order of 20, however, more will be said about this later.

The aggregate model can handle this case of variable payments to principle and interest, X by making the average loan repayment time, DELRP, an appropriate function of X. An appropriate relationship is (from Equation 4).

10) $DELRP(t) = (\ln(X(t)/RINT)) - \ln(X(t)/RINT - TOL(t))/RINT$

$X(t) > RINT*TOL(t)$

The variable TOL replaces BAL(0) in Equation 4 because in the aggregate model payments to principle and interest are based upon the total value of outstanding loans--TOL(t). (This equation assumes that the changing

payments X(t) are applied uniformly to individual loans in the aggregati(in proportion to the value of each individual loan). That is, $X_i(t)$ is proportional to $BAL_i(0)$, for i=1,2,... designating individual loans.

In what follows we will describe tests of the aggregate model of Figure (1). As pointed out earlier this model is only approximate for $K < \infty$ in the distributed delay. In the appendix we will describe another (much more complicated) approach which is capable, in principle, of modeling the aggregate situation more precisely.

Results of Tests of the Model of Figure (1)

Appendix I lists a computer program used to simulate the model of Figure (1). The model assumes that the aggregate borrowing rate is:

11) $BR(t) = 100{,}000\ \$/yr \qquad 0 \leq t \leq 2$ years

$\qquad\quad = 0 \qquad\qquad\qquad\qquad t > 2$ years

The "normal" loan repayment period, DELRPN, is 15 years. DELRPN is the mean loan repayment period when payments to principle and interest are not increased for accelerated repayment. That is, it is a constant. DELRP is the, possibly variable, mean loan repayment period which corresponds to the value of X(t) extant in particular situations. In the simulation runs to be discussed this distributed delay parameter K is assigned the value 20 which means that the standard deviation of individual loan durations about the mean DELRP is $DELRP/\sqrt{k} = .223$ DELRP. In the program the variable XMIN represents the payments to principle and interest that correspond to the "normal" loan repayment period DELRPN. XMIN is computed as:

12) $XMIN(t) = (TOL(t)*RINT*e^{RINT*DELRPN})/(e^{RINT*DELRPN}-1)$

In general payments to principle and interest in the model are computed as:

13) $X(t) = XMIN$ if $0 \leq t \leq 2$ years

$= (1 + C1*(T-2))XMIN$ if $t > 2$

The parameter C1 (if assigned values greater than zero) allows for accelerated loan repayment when time, T, is greater than two years.

In the first simulation run to be discussed the parameter C1 was assigned the value zero which specifies normal (unaccelerated) loan repayment with DELRP = DELRPN = 15 years. Some pertinent results are shown in Table I. The distributed nature of the repayment periods for individual loans is evident from the second column which shows some loans paid off before 15 years and some after. Accumulated payments to principle and interest over the 25 year simulation are $303,200. Since the total value of loans was $200,000, the interest amounts to $103,200.

The approximate nature of the model is apparent from the unpaid balance column which shows that the final unpaid balance is about $11,000. It should, of course, be nearly zero since total outstanding loans at the end of the simulation experiment are insignificant ($600). This error amounts to 5 1/2 percent of the total original loan value. This error may or may not be significant depending upon how the model is to be used. In cases where simulation results are relative, that is where the results of one loan repayment policy are being compared with another, one would often expect the error to cancel out. Simulation experiments confirm the assertion made above that the model error decreases as the K parameter of distributed delay increases. When K = 40 the terminal error in the unpaid

balance becomes about 2.5 percent. In practice, of course, the K value should be determined by the variance in the duration of individual loans in the real world situation being modeled. In cases where the real world variance is large enough to require a K value which is too small for acceptable simulation accuracy, one approach is to disaggregate loans into two or more categories within which variances are small enough to prescribe acceptable K values. One would then use two or more distributed lag models in the general framework of Figure (1).

A second simulation run was conducted which allowed for accelerated loan retirement. This second run was identical to the first except that the parameter C_1 was assigned the value .05. This corresponded to (from Equation (13)) a 5 percent increase in payments to principle and interest per loan for each year of the payback period beyond the second. Results from this simulation run are shown in Table II. As seen in the table,, the average loan repayment period, DELRP, declines after the second year due to the accelerated repayment schedule. Accordingly, total payments to principle and interest are reduced to $279,100 (compared with $303,200 for the same loans with normal repayment). Again, the simulation error is apparent in that the unpaid balance is non-zero (about $8,500) when all loans have passed through this distributed delay (TOL = 0). This error is relatively smaller than the corresponding error under normal repayment (results of Table 1). Annual payments to principle and interest for the two cases are shown graphically in Figure (2).

Conclusion

A method has been discussed for simulating an aggregate loan repayment process. The model handles the case where individual loans have the

Table 1: Results of Loan Repayment Simulation ($C_1 = 0$)

Time	Total Outstanding Loans ($1000)	Payments to Principle and Interest ($1000/yr)	Accumulated Payments to Principle and Interest ($1000)	Unpaid Balance ($1000)	DELRP (years)
1	100	7.58	3.79	98.4	15.
2	200	17.69	17.69	192.6	15.
5	200	20.22	78.36	164.3	15.
10	198.8	20.14	179.4	104.5	15.
15	123.2	13.18	268.3	37.0	15.
20	16.89	1.95	300.4	11.1	15.
25	.60	.07	303.2	11.4	15.

Table 2: Results of Loan Repayment Simulation with Accelerated Repayment (C_1 = .05)

Time	Total Outstanding Loans ($1000)	Payments to Principle and Interest ($1000/yr)	Accumulated Payments to Principle and Interest ($1000)	Unpaid Balance ($1000)	DELRP (years)
1	100	7.58	3.79	98.4	15.
2	200	17.69	17.69	192.6	15.
5	199.2	23.17	83.16	159.3	12.1
10	184.1	26.72	211.1	67.2	9.2
15	7.2	1.63	278.1	8.8	7.4
20	0	0	279.1	10.6	6.24
25	0	0	279.1	14.3	5.38

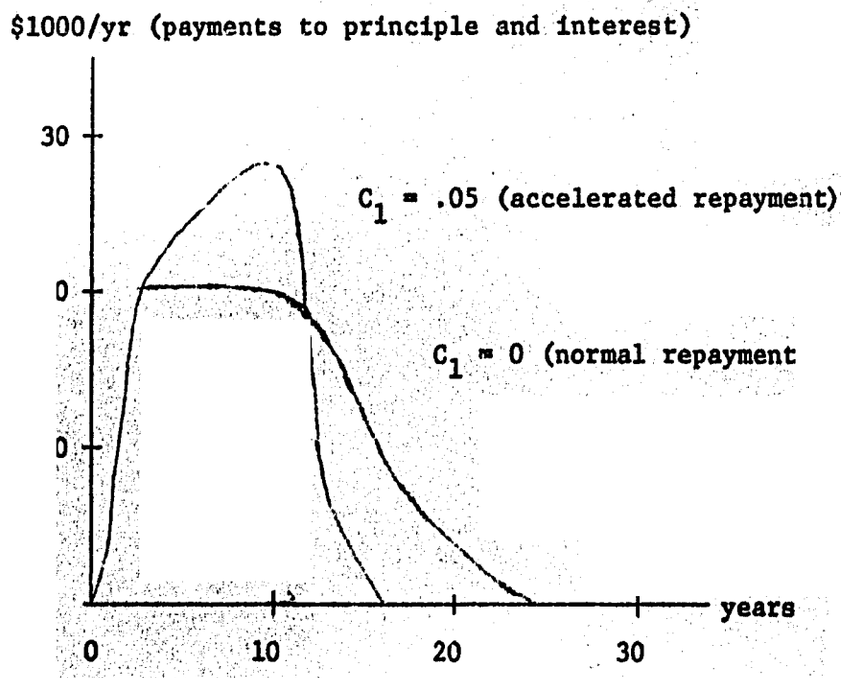

Figure 2. Annual payments to principle and interest under normal and accelerated repayment.

same interest rates but durations which are not identical but described by a probability distribution which is approximately normal. The model computes, over time, the total value of outstanding loans, aggregate payments to principle and interest and total unpaid balance as they are influenced by loan repayment policies which may vary over a given simulation run. That is, the model is not restricted to the assumption of fixed payments to principle and interest for individual loans. There is a simulation error inherent in the procedure that approaches zero as K (the order of the distributed delay used to simulate loan duration) approaches ∞. Useful results have been obtained for K = 20 or greater. This corresponds to a standard deviation of individual loans about the mean, DELRP, of .223 DELRP or less. If this assumption is not realistic in the real world, the total population of loans can be disaggregated into categories within which this assumption is a valid one. Appendix II discusses an approach, which with more research, may lead to more exact simulation of these aggregated loan repayment processes.

APPENDIX I

A Fortran program for simulating the aggregate loan repayment model of Figure (1).

```
      PROGRAM LNTST(INPUT,OUTPUT)
      DIMENSION R(40)
      RLGTH=10.
      RLGTH=20.
      RLGTH=30.
      C1=.05
      C1=0.
      K=3
      K=10
      K=40
      K=20
      DELRPN=2.
      DELRPN=5.
      DELRPN=15.
      T=0.
      DT=.125
      DT=.05
      DT=.25
      TOL=0.
      TOLI=0.
      BAL=0.
      SX=0.
      SBR=0.
      SRLP=0.
      RINT=.06
      DELRP=DELRPN
      DELP=DELRPN
      NIT=RLGTH/DT
      PNTINT=1.
      NIPP=PNTINT/DT
      NIOL=NIT/NIPP
      A1=EXP(RINT*DELRPN)
      DO 10 J=1,K
   10 R(J)=0.
      RLP=R(1)
      PRINT 101
  101 FORMAT(5X,119HT                    RLP              TOL              TOLI
     1        DELRP              X                SX                BAL
     2 )
      DO 1 I=1,NIOL
      DO 11 I1=1,NIPP
      T=T+DT
      BR=100.
      XMIN=-RINT*TOL*A1/(1.-A1)
      IF (T.GT.2.0) GO TO 2
      X=XMIN
      GO TO 3
    2 X=(1.+C1*(T-2.))*XMIN
      BR=0.
    3 A2=X/RINT
      SBR=SBR+DT*BR
      BAL=BAL+DT*(BR+RINT*BAL-X)
      SX=SX+DT*X
      IF (T.GT.DT)  GO TO 4
      DELRP=DELRPN
```

```
      GO TO 5
    4 DELRP=(ALOG(A2)-ALOG(A2-TOL))/RINT
    5 TOLI=TOLI+DT*(BR-RLP)
      CALL DELVF(BR,RLP,R,TOL,DELRP,DELP,DT,K)
      SRLP=SRLP+DT*RLP
   11 CONTINUE
      PRINT 100,T,RLP,TOL,TOLI,DELRP,X,SX,BAL
      PRINT 102,SBR,SRLP
  100 FORMAT(8(5X,E10.4))
  102 FORMAT(2(5X,E10.4))
    1 CONTINUE
      END
```

```
      SUBROUTINE DELVF(RIN,ROUT,R,STRG,DEL,DELP,DT,K)
      DIMENSION R(1)
      FK = FLOAT(K)
      B = 1. + (DEL-DELP)/(DT*FK)
      IDT = 1. + 4.*DT*FK/DELP*AMAX1(B, 0.)
      IDT = 1. + 9.*DT*FK/DELP*AMAX1(B, 0.)
      IDT = 1. + 2.*DT*FK/DELP*AMAX1(B, 0.)
      A = FK*DT/(DELP*FLOAT(IDT))
      DELP = DEL
      KM1 = K-1
      DO 20 J=1,IDT
      DO 10 I=1,KM1
      R(I) = R(I) + A*(R(I+1)-B*R(I))
10    CONTINUE
      R(K) = R(K) + A*(RIN-B*R(K)
20    CONTINUE
      STRG = 0.
      DO 30 I=1,K
      STRG = STRG + R(I)*DEL/FK
30    CONTINUE
      ROUT = R(1)
      RETURN
      END
```

APPENDIX II

Toward an Improved Method of Simulating Aggregative Loan Repayment Processes

Consider an individual loan taken out at time zero with duration D_i, interest rate R and value BR_i. We can view the loan repayment process as a discrete delay with duration D_i, input $BR_i\delta(t)$ ... (an impulse function) and output $RLP_i(t)$. The variable RLP is the rate at which the loan is paid off. In this case the total value of the outstanding loan is TOL given by:

$$\text{A1)}\quad TOL_i(t) = \int_{0-}^{\infty} [BR_i(t) - RLP_i(t)]dt$$

$$= BR_i \qquad 0 \leq t \leq D_i$$

$$= 0 \qquad t > D_i$$

In terms of the Laplace transformation we can write:

$$\text{A2)}\quad TOL_i(S) = BR_i\left[\frac{1-e^{-D_i S}}{S}\right]$$

From Equation (5) we know that the payments to principle and interest on this loan are:

$$\text{A3)}\quad X_i(t) = \frac{TOL_i(t)\cdot R}{1-e^{-RD_i}}$$

From Equation (8) we can write the following Equation for the unpaid balance BAL_i:

$$\text{A4)}\quad \frac{dBAL_i}{dt} = -X_i(t) + R\cdot BAL_i(t) + BR_i(t)$$

Taking Laplace transforms and solving for $BAL_i(S)$ in (A4) we get:

$$\text{A5)} \quad BAL_i(S) = \frac{-X_i(S) + BR_i}{S-R}$$

Combining Equations (A2) and (A3) after Laplace transforming (A3) we get:

$$\text{A6)} \quad X_i(S) = \frac{R \cdot BR_i}{1-e^{-RD_i}} \left[\frac{1-e^{-D_i S}}{S}\right]$$

Now put (A6) into (A5) to eliminate X_i and obtain for $BAL_i(S)$:

$$\text{A7)} \quad BAL_i(S) = \frac{-R \cdot BR_i}{S(S-R)} \left[\frac{1-e^{-D_i S}}{1-e^{-RD_i}}\right] + \frac{BR_i}{S-R}$$

We will now use Equations (A6) and (A7) to develop an aggregate model which represents the case of a large number of loans of varying durations ($D_1, D_2, \ldots, D_n$). In doing so we assume that ($D_1, D_2, \ldots, D_n$) is a set of random observations from a probability density function f(D). The aggregate unpaid balance is then:

$$\text{A8)} \quad \sum_{i=1}^{n} BAL_i(S) = -\frac{R}{S(S-R)} \sum_{i=1}^{n} BR_i \frac{(1-e^{-D_i S})}{(1-e^{-RD_i})} + \sum_{i=1}^{n} \frac{BR_i}{S-R}$$

Further, we can take the expected value of (A8) ... (assuming that BR_i and D_i are independent):

$$\text{A9)} \quad E[\sum_{i=1}^{n} BAL_i(S)] = \sum_{i=1}^{n} \frac{BR_i}{S-R} \left\{\frac{R}{S} E[\frac{e^{-D_i S}}{1-e^{-RD_i}}] - \frac{R}{S} E[\frac{1}{1-e^{-RD_i}}] + 1\right\}$$

Equation (A9) gives us an operational way of computing an unbiased estimate of the aggregate borrowing rate if we can develop tractable models for:

$$E[\frac{e^{-D_i S}}{1-e^{-RD_i}}] \quad \text{and} \quad E[\frac{1}{1-e^{-RD_i}}]$$

The latter term can be computed given the specific probability density function f(D) since:

$$\text{A10)} \quad E[\frac{1}{1-e^{-RD_i}}] = \int_0^\infty \frac{f(D)}{1-e^{-RD}}\, dD$$

In many cases (including the case of f(D) a member of the Erlang family of density functions) a closed form for this integral does not exist and a series or other approximation must be used. In any event the problem is manageable. Developing a computable model for $E[\frac{e^{-D_i S}}{1-e^{-RD_i}}]$ is a tougher problem. We can write:

$$\text{A11)} \quad E[\frac{e^{-D_i S}}{1-e^{-RD_i}}] = \int_0^\infty \frac{e^{-DS} f(D)}{1-e^{-RD}}\, d(D) = \int_0^\infty f(D) e^{-DS}[1+e^{-RD}+e^{-2RD}+\ldots]dD$$

Using the S-shift property of the Laplace transform this becomes:

$$\text{A12)} \quad E[\frac{e^{-D_i S}}{1-e^{-RD_i}}] = \sum_{q=0}^{\infty} F(S+qR)$$

where:

$$\int_0^\infty f(D) e^{-DS} dD = \mathcal{L}[f(D)] = F(S)$$

Equation (A12) tells us that in theory we need an infinite number of distributed delays (assuming f(D) is Erlang) to simulate the loan repayment process. In any event using Equation (A12) we would need a large number since this infinite series converges slowly. More research is needed to explore ways of representing, or approximating, A12 in a manner that leads to a tractable simulation model.

The same problem described above occurs in developing equations that will compute X(t), the aggregate payments to principle and interest. Summing over $X_i(S)$ in (A6) to get the aggregate and taking expected values gives:

$$\text{A13)} \quad E[\sum_{i=1}^{n} X_i(S)] = \sum_{i=1}^{n} \frac{R \cdot BR_i}{S} \{E[\frac{1}{1-e^{-RD_i}}] - E[\frac{e^{-DS}}{1-e^{-RD_i}}]\}$$

Therefore, given a compact method of approximating:

$$E[\frac{e^{-D_i S}}{1-e^{-RD_i}}] = \sum_{q=0}^{\infty} f(S+qR)$$

one can readily compute both X(t) and BAL(t). Some time would be well spent in investigating this problem further.