AGENCY FOR INTERNATIONAL DEVELOPMENT
WASHINGTON, D. C. 20523

BIBLIOGRAPHIC INPUT SHEET

FOR AID USE ONLY
Batch 31

1. SUBJECT CLASSIFICATION

A. PRIMARY: Agriculture — AA50-000C-0000

B. SECONDARY: Research

2. TITLE AND SUBTITLE

An introductior to the systems approach as a problem solving methodology

3. AUTHOR(S)

Manetsch,T.J.;Park,G.L.

4. DOCUMENT DATE	5. NUMBER OF PAGES	6. ARC NUMBER
1973	50p.	ARC

7. REFERENCE ORGANIZATION NAME AND ADDRESS

Mich.State

8. SUPPLEMENTARY NOTES *(Sponsoring Organization, Publishers, Availability)*

(Presented at Workshop on Agr.Systems Analysis,Seoul,1973)

9. ABSTRACT

10. CONTROL NUMBER

PN-AAB-784

11. PRICE OF DOCUMENT

12. DESCRIPTORS

Problem solving
Systems analysis

13. PROJECT NUMBER

14. CONTRACT NUMBER

CSD-2975 Res.

15. TYPE OF DOCUMENT

AID 590-1 (4-74)

CSD-2975 Rev.
PN-AAB-784

AN INTRODUCTION TO THE SYSTEMS APPROACH AS A PROBLEM SOLVING METHODOLOGY

(Exerpt from a book in preparation: Systems Analysis and Simulation With Applications to Social and Economic Systems
T. J. Manetsch and G. L. Park, Michigan State University)

January, 1973

Chapter II

The Systems Approach as a Problem Solving Methodology

In this chapter we will explore in more depth the methodology underlying the systems approach. This methodology has been discussed elsewhere from somewhat different points of view (Asimow (1), Churchman (2) and Hall (6)). It will be seen that this approach is a decision-making process with structure-functions, outcomes, evaluations and decisions. Our goal is to give the reader a working understanding of the process. We will do this through discussion, diagrams and examples. A word of warning to the serious reader: the diagrams <u>are</u> important, they <u>do</u> have content and it <u>is</u> important to master them.

Major Phases of the Approach

It is useful to think of the system's problem-solving process as taking place in five major phases (see Figure (1)). In this section we will take a global view of these major phases and the relationships that exist among them. Succeeding sections will look at particular phases in detail and it will be seen that each is in turn an iterative decision making process composed of sub-phases.

The major phases of the approach as viewed here are: feasibility evaluation, abstract modeling, implementation design, implementation and system operation. As seen in Figure (1) the movement of the process is from a set of needs to be satisfied (at the top) toward an operational system (at the bottom) capable of satisfying the needs which exist. The solid lines and arrows indicate the path of flow through the process,

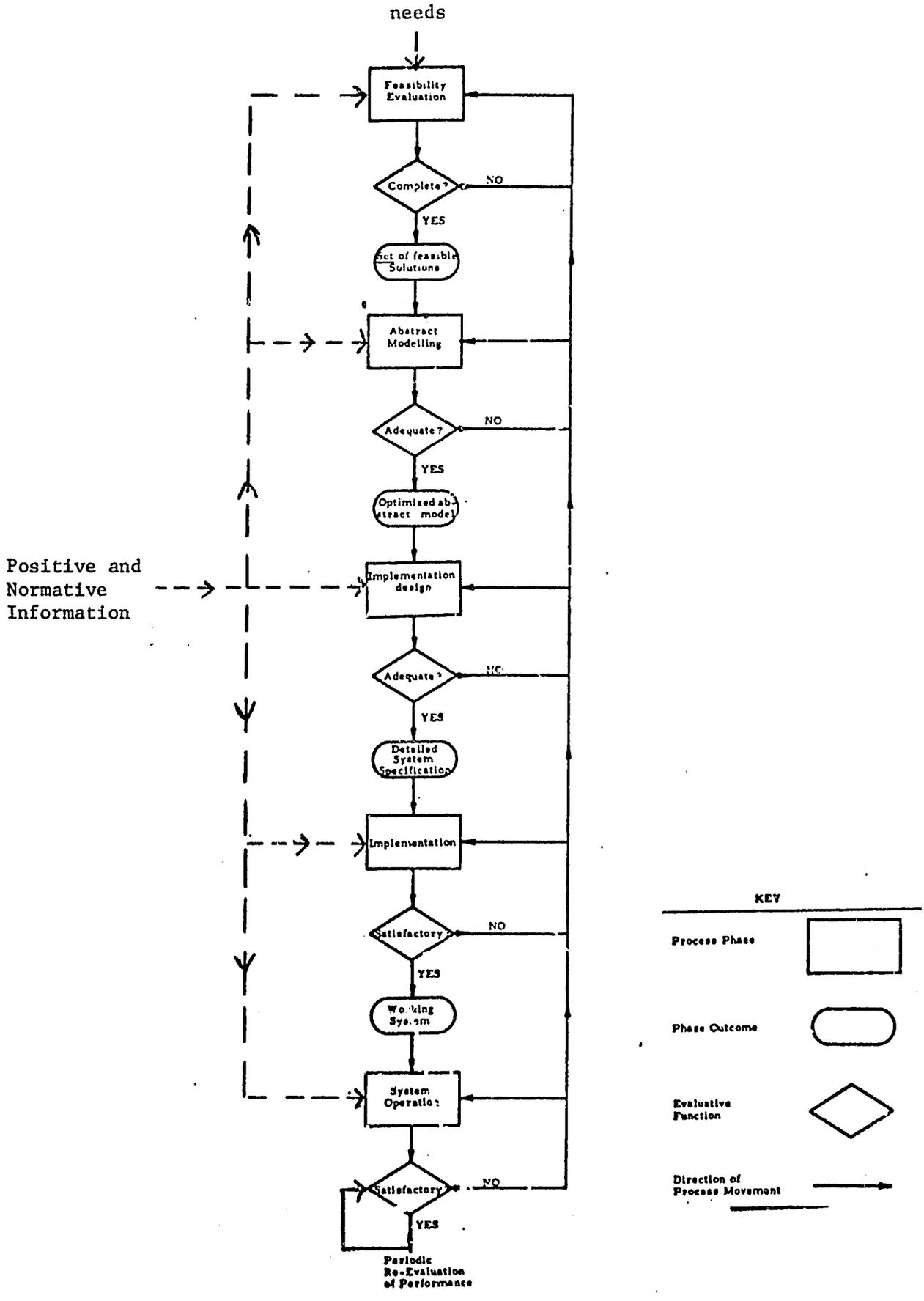

Figure 1. The Systems Approach as a Proble Solving Methodology.

i.e., the sequence of functions which must be carried out in order to achieve system objectives. Each major phase in the process is followed by an evaluation (the diamond shaped boxes) to determine whether the outcome of the phase has been carried out satisfactorily or not. Reverse arrows indicate iteration or repetition of prior phases in the event that a given outcome is not satisfactory. As one might suspect, the process is inherently iterative in nature--we learn by doing and re-doing. It is impossible in all but the most trivial cases to move directly from problem to solution. Problem solving by finite human beings is an iterative-learning process. As shown in the diagram by dotted lines, each phase of the process involves the accumulation and processing of information--on successive iterations additional information may be acquired and processed. Before plunging into the thick of the trees we will survey the forest by taking a broad look at the five phases of Figure (1).

Feasibility Evaluation has as its goal the generation of a set of feasible system "alternatives" capable of satisfying needs which have been identified and selected for satisfaction. A system "alternative" here is a particular system structural configuration or management strategy devised as a means of satisfying existing needs (examples later in this chapter will illustrate these and other concepts introduced as we go). This phase begins with some, usually primitive, understanding of the needs the system must satisfy. A careful analysis of needs follows to determine whether the needs do, in fact, exist and if they do to state them in an operationally useful form. On the basis of these stated needs, available resources and other information, this phase formulates an explicit statement of the problem(s) to be solved by the system to be designed and/or

managed. This problem statement includes, among other things, the criteria to be used to evaluate system performance and the decision variables to be manipulated to achieve desired system performance. Given an adequate problem statement, a number of system design or management alternatives are creatively synthesized. At this point the approach seeks to consider all possible approaches to the problem at hand. Alternatives are then critically examined to eliminate those that are not physically, economically, financially, socially or politically realizable. The "output" of the Feasibility Evaluation phase, then, is a set of realizable alternatives which appear capable of satisfying the identified needs.

Abstract Modeling. This second major methodological phase receives as inputs the feasible alternatives of Feasibility Evaluation and has as its output the broad specifications for a system design and/or management strategy to be implemented in the real world. Wherever possible mathematical models are constructed of the system alternatives. Models are usually implemented on a computer and then validated. Validated models are used in a number of possible modes of operation to determine the system alternative and the specific manifestation of the chosen alternative (as determined by the specific values assigned to variables under the control of decision makers) that results in "good" or "best" behavior of the system under study. In the event that it is possible to define a single criterion to measure system performance, "abstract modeling" involves finding values for the decision variables which optimize the relevant criterion. If no unique performance criterion is available for evaluating system performance, life is more complex. In this case the abstract modeling phase involves an interactive process in which systems analysts and decision makers use the models to explore the impacts of various alternatives and decision

variables upon the multiple system performance criteria which must be considered. This interaction explores tradeoffs that are possible among performance criteria, assists decision makers in arriving at normative judgments about what is "good" or "best" and leads to the creative synthesis of better system designs and/or management strategies.

Implementation Design. The purpose of this phase is to completely specify the details of system and/or management strategy designed in the abstract during the modeling phase. "Completely specify" means developing a complete set of instructions that will lead to operationalization of the desired real world system. If a system is being designed "from scratch" all sub-systems and lower order system components must be designed in detail. This is accomplished by treating sub-systems, etc. as systems in themselves and re-applying the feasibility evaluation and mathematical modeling phases at successively lower system levels. For design of large systems this is a complex undertaking involving many disciplines, large sums of money and usually much iteration. If the system task is to develop a management strategy, "Implementation Design" involves complete specification of the system structure needed to implement the strategy-data acquisition, statistical estimation, communication channels to decision makers, computation of on-line management variables, etc.

Implementation. As the name indicates, the primary purpose of this phase is to give physical existence to the desired system. Physical devices, facilities, etc. are acquired or constructed, organizations are staffed and so forth--all according to the detailed specifications of implementation design which include a plan for implementation (often employing critical path methods). Inadequacies and errors of implementation

design are detected and corrected through repetition of Implementation Design.

Operation provides the only valid test of system adequacy. Often operation will reveal additional inadequacies requiring modifications. In many cases a continuing sequence of modifications of system structural design can be expected due to the rapidly changing environment within which the system must function. System "Operation" also involves on-line management or control. In this case the management strategy developed during earlier phases is implemented as an on-line decision-making process. As with system structure, this management system must be periodically reviewed and improved by repeating earlier phases of the systems methodology.

With this rather broad overview of systems methodology we will turn to a more detailed description of some of these phases.

Feasibility Evaluation

As stated previously, Feasibility Evaluation begins with some expressed or unexpressed needs and ends with a set of feasible system alternatives which will satisfy those needs. A flow diagram of this phase of the systems engineering process is shown in Figure (1). Feasibility evaluation moves through the six sub-phases shown in an iterative manner--repeating prior sub-phases when necessary and proceeding when evaluation of results dictates.

Needs Analysis. Feasibility Evaluation begins with analysis of the needs the system under consideration must satisfy. Needs analysis usually begins with a rather hazy understanding of what the underlying needs are. The purposes of this sub-phase are to: (1) establish that the alleged needs do or do not exist and (2) develop an explicit description

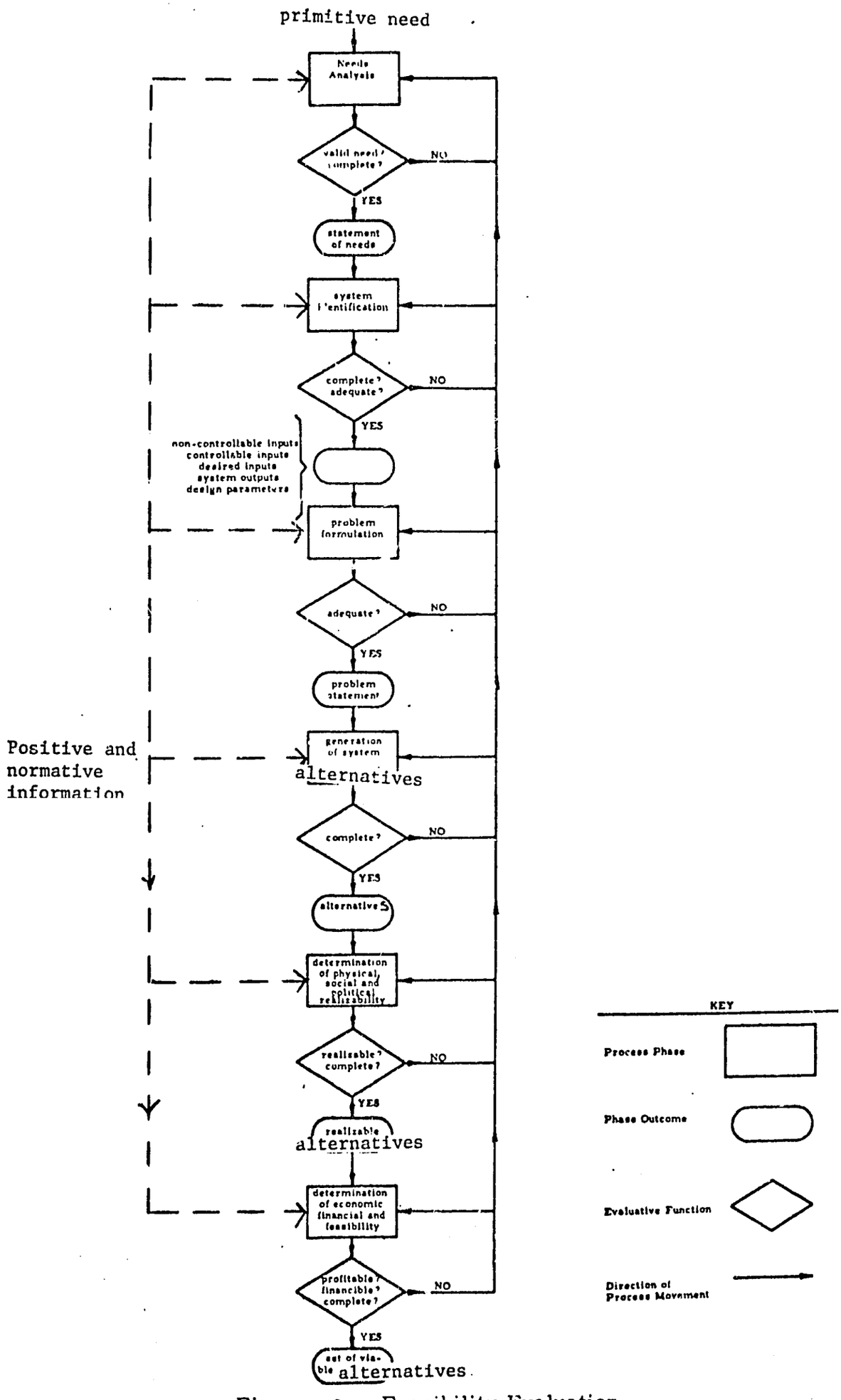

Figure 2. Feasibility Evaluation.

of existing needs which can lead to a formulation of objectives for the system. Analysis of needs is not an easy thing to do. It is often difficult to penetrate a veil of "apparent" needs and identify underlying actual needs. For example, human beings are not always candid in expressing such things, in fact, we don't always know what our real needs are! A pragmatic approach to this problem is to seek to identify as "needs" those things that people or institutions of society are willing to pay for. However, there are moral pitfalls here. If this approach is used indiscriminately, it leads to the unrestricted promotion of things that would generally be considered bad--pornography, harmful drugs, fad trivia that divert resources from real human needs, etc.

Needs analysis must carefully consider the needs of all persons and institutions which will be involved with the proposed system. These include the managers or administrators of the system, the producers or implementers of the system, those who must operate and maintain the system, the distributor of the outputs of the system if one exists, the users of goods or services provided by the system and lastly the designers of the system themselves. Needs analysis always involves interactions with the decision makers responsible for system performance. Other means for accomplishing needs analysis may include market surveys, opinion polls, expert opinions, studies of working systems which are similar in some respects to the system under study, etc. At the conclusion of needs analysis a decision is made, hopefully overtly, to tentatively continue the program or to abort it. If the available evidence warrants a decision to continue, explicit statements of the various needs the system must satisfy are carried into the "system identification" sub-phase of Feasibility Evaluation.

System Identification* forms a link between the statement of needs and a specific statement of the problems that must be solved in order to satisfy those needs. At this point in the process, the proposed system is viewed as a "black box." That is, every effort is made to determine attributes that any system must possess if it is to satisfy the specified needs. Great loss in insight can result from focusing attention upon a particular system concept at this point in the study. In essence, we are seeking the universal characteristics of all systems capable of satisfying the determined needs. More specifically, we seek the information associated with Figure (3). This information falls into three general categories: system input variables, system output variables, and parameters which define aspects of system structure.

System input variables are of two classes: the exogenous or environmental inputs and overt inputs. The former are variables which affect the system but are not, in turn, significantly influenced by it. Clearly "environmental" depends upon what we are calling the "system." We'll have more to say about this important matter later. By way of illustration here, a business firm would likely have as environmental inputs variables such as interest rates, inflation rates, weather, and changes in consumer attitudes.

Overt inputs, on the other hand, are variables which are necessary for the system to carry out its intended functions. These are provided for by the designers or managers of the system. It is helpful to further classify this set of system variables according to whether or not overt inputs can be controlled as a means of altering system performance during system operation. The distinction is necessary because not all overt

*Note the difference from the more specific "identification problem" stated on p. ( ).

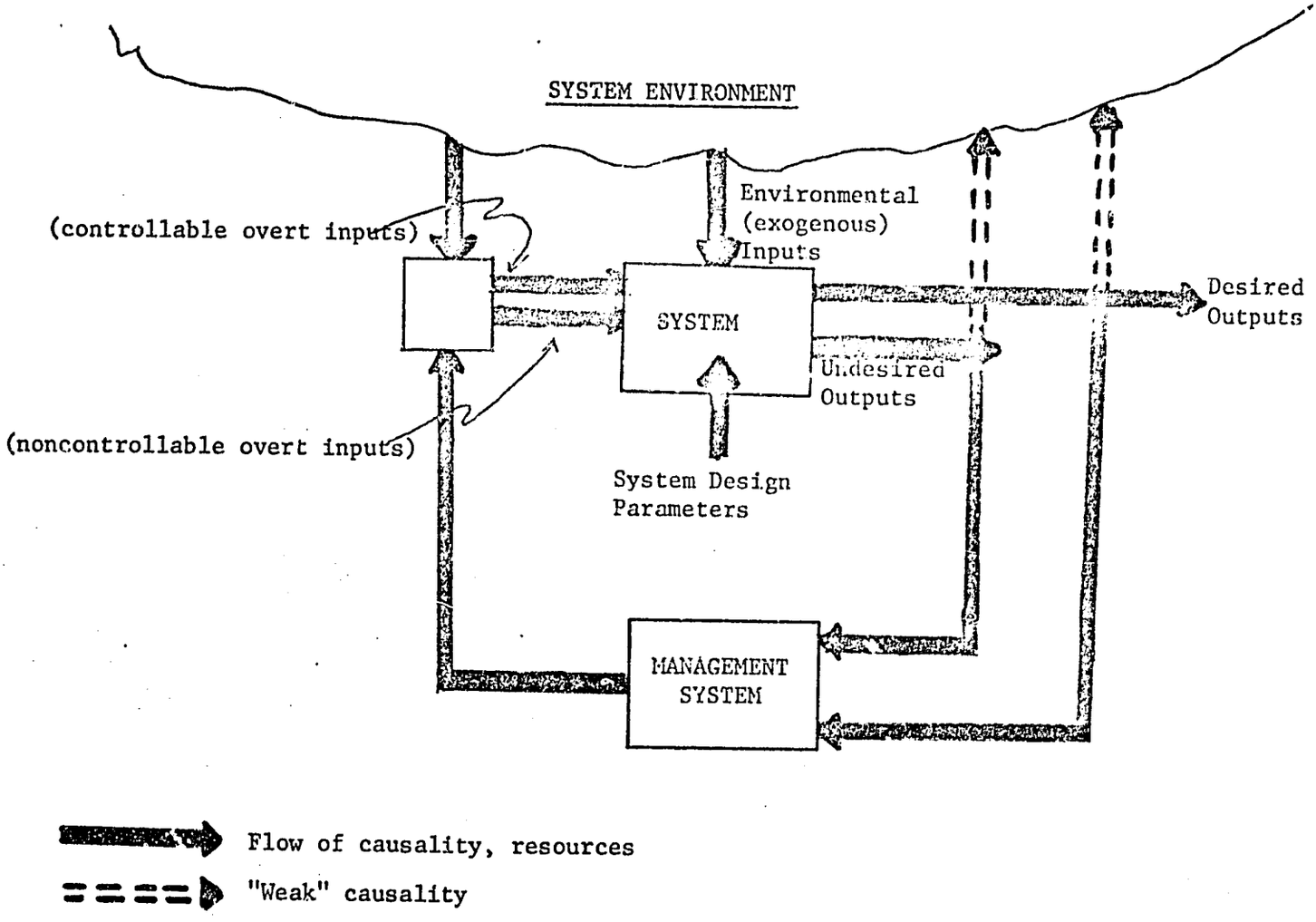

Figure 3. System Identification as Part of the Systems Approach (Feasibility Evaluation Phase)

inputs are efficacious as means of on-line system management. Controllable input variables, on the other hand, can be varied during system operation to achieve desired system performance and like the noncontrollable overt inputs include men, materials, energy, capital and information.

System output variables, as shown in Figure (3) likewise fall into two broad classes: desired outputs and undesired outputs. Desired outputs in general will be the system's response to the needs specified in needs analysis--those outputs which are desired in the sense that they are need-fulfilling. Undesired outputs, on the other hand, are the unavoidable by-products of the system as it functions to supply desired outputs. Thus, a factory generates waste materials and perhaps health hazards and a transportation system accidents and air pollutants. The system identification sub-phase seeks to identify all important undesired side effects produced or potentially producible by the system under study. Attention must be given to the many possible dimensions in which undesired effects can be manifested--physical, biological, economic, social, moral, etc.

The last important set of system variables to be specifically identified during system identification is "system design parameters" shown in Figure (3). These are variables which serve to specify the structure of the system. They are important decision variables which, when fixed during system design, have a great deal to do with the ability of the system to efficiently produce its need-fulfilling "desired outputs." While each system has its own unique design parameters to be identified, some examples might include the physical location of the system and its components, physical dimensions of the system, and number and types of components. System design parameters tend to be fixed because they

cannot be changed without expending resources. In some cases, however, it may be desirable to change them during system operation in order to improve the ability of the system to perform well in a changing environment.

The system identification sub-phase, therefore, leads to a detailed specification of the variables involved in the design and control processes. Once the variables of Figure (3) have been identified, "system identification" seeks to establish quantitative measures for as many variables as possible and to examine each for constraints which may apply. In general, upper limits will constrain the amounts of inputs which can be utilized, the amounts of undesired outputs which can be tolerated and there may be lower limits on the levels of desired outputs the system must provide. System design parameters will in general be bracketed between upper and lower limits.

System identification concludes with the determination of performance criteria which will assist in evaluating system alternatives. These criteria will often include the levels of desired outputs of the system. They may also include other measures such as benefit-cost ratios. When the choice of a single all-encompassing performance criterion is not clear, it is important, as part of system identification, to determine a <u>set</u> of relevant criteria which will assist in later settling normative questions relating to trade-offs among "goods" and "bads."

<u>Problem Formulation</u> is based on the detailed information generated during "system identification." If possible, it develops an explicit statement of what the system must do in order to satisfy the determined needs--the specific values of specific outputs to be provided and specific performance criterion to be optimized. When life is too complex to permit

this degree of specificity, the problem statement defines the set of performance criteria to be subsequently evaluated. In any event, the problem statement defines in detail all relevant decision variables (controllable inputs and design parameters) to be considered as means of affecting system performances other necessary system inputs to be provided, the environment within which the system must operate, the desired system outputs to be provided, and the undesired outputs to be avoided. It also includes the explicit constraints on inputs, outputs and parameters which must be observed during the design/management process.

The iterative character of the systems methodology is often in evidence in developing an adequate problem statement. It is often the case that information generated later in the problem-solving process sheds light on additional needs, requirements, performance criteria, decision variables, etc. which should be included in the systems study. Such information can lead to a refinement of the problem statement.

System Definition-We'll now return to a basic issue inherent in "system identification" that was dealt with lightly earlier. Before analysts can specifically identify the various system variables of "system identification" there is a more fundamental issue to address. What do we mean by the "system?" Figure (3) dichatomizes the universe into the "system" (with its management structure) and the "environment"--the rest of the universe. What do we put in the "system" for purposes of our analysis and what goes into the "environment?" These are exceedingly important questions as many systems studies have failed because of an inappropriate definition of the "system." On one hand, analysis can be invalidated because an overly narrow definition

omits important factors and interactions that affect system performance. On the other hand, a needlessly broad definition can inundate the analysis with irrelevant factors and interactions that obscure basic issues and leads to failure through confusion and inefficiency.

In many cases it is possible to arrive at a system definition that is both meaningful from the standpoint of achieving useful results and operationally workable. In other complex systems (with which man is forced to deal) we of necessity ignore many factors we know to be relevant to the problems at hand because of lack of understanding or a lack of resources to cope with them. In such cases we must be aware of the partial nature of our solutions and interpret them with great caution. This interpretation is enhanced if careful study has preceeded the decision to ignore factors which are likely to be important in system analysis, i.e., if such decisions are made overtly.

There are several principles which can help in arriving at appropriate definitions for "system" and "environment" in particular situations. The first of these is illustrated in Figure (3). "System" and "environment" are defined so that the causal links from the system to the environment are "weak." That is, so that the effects of the system upon its environment can safely be neglected. This is a general social welfare point of view that is not generally accepted by all decision makers, i.e., some private decision makers in a free society do not or cannot take this stance. It is, however, a valid one for long run viability of man-made systems. (Necessary not only for general welfare but also for private interests within society!) This principle is also important in order to avoid causal links operating through the environment which can invalidate the systems analysis by altering the assumptions

upon which it is based (i.e., the specific assumptions made with respect to the behavior of environmental variables through time).

A second basic principle that can help in arriving at operationally useful system definitions has to do with the range of factors which are available for overtly controlling system performance. In general, all factors which can potentially be used by decision makers to alter system performance for the better should, at least initially, be "in the system." The full power of the systems approach can be lost by an overly narrow system definition which overlooks significant "degrees of freedom" for decision making. Further, in some situations, adequate system performance is not attainable with the readily available decision variables--additional ones must be devised and implemented.

A third principle has to do with the breadth of the system definition as it affects the accuracy of analysis. System behavior is often strongly influenced by uncontrollable environmental (exogenous) variables. In some cases the quality of system design/management can be improved by improving estimates of what values these uncontrollable variables will take on through time. Estimates of exogenous variables can often be improved by studying some of the more important causal relationships that generate the significant environmental inputs to the system. As an example, important exogenous variables in many economic studies are variables associated with the larger economy that surrounds the system under study, i.e., general price levels and exogenous demands. Improved projections of such variables can result from incorporating crude models which to a certain extent "explain" them.

Another aspect of this third principle has to do with the range of endogenous variables included in the system. In complex systems,

performance is dependent upon a multitude of interrelated factors or variables. It follows that the validity of projections of behavior under alternative design/management strategies can improve as additional variables are included in the analysis. This argues for a "broad" system definition vis-a-vis the range of endogenous variables included.

Clearly system definition is not an easy task. While most of the above discussion indicates the desirability of a very comprehensive system definition, there are obvious constraints which limit the breadth it is feasible to cope with in specific situations. Difficult decisions must often be made as to the priority items to be included in the "system"--those items that will, for a given budget, give the best results in the system study as a whole. A good operating principle here is to take the broadest view that is reasonable early in the study (when it is inexpensive to do so). Overt decisions can then be made about which problem elements to retain and which to ignore as the practical constraints of money, time and information come to bear upon the situation.

Before moving on to discuss the sub-phases of Feasibility Evaluation that follow Problem Formulation, we will pause to illustrate the ground covered so far with an example. This example, taken from common experience, will begin with a primitive statement of needs, carry out system identification and develop a first iteration problem formulation.

Example of System Identification (Broad Sense) as a Means of Problem Definition

View the process of acquiring a family transportation system (not necessarily "buying a car") as a system design problem. Begin with the following basic statement of needs:

"Transportation is needed for a suburban family of five two adults and three children ages 8, 10 and 12. Specific needs include daily transportation to and from work for Dad (10 miles one way), four to six short hops during the day for Mom per week, frequent (6-12 per week) local trips involving the whole family and an average of one long vacation trip annually to various parts of the U. S. and Canada. Safe, reliable and comfortable transportation must be provided in all seasons of the year. While status derived from the system is not an overriding factor, only socially 'respectable' solutions are acceptable."

Identify relevant system variables including desired outputs, undesired outputs, environmental inputs, controllable overt inputs, non-controllable overt inputs, and system design parameters. Indicate where constraints might apply to these variables and parameters and associate units of measure wherever possible. Develop possible measures of system performance to be used in later evaluation of system alternatives. Finally, on the basis of this system identification, develop a first iteration problem statement.

We begin by defining the "system" in such a way that the structure we have freedom to determine is "inside the system." In this case we include the vehicle(s), related accessories and support systems--financing, insurance, maintenance, routing and storage or parking. If one or more of these support systems, for example, storage, is completely predetermined we put it in the system "environment."

Desired Outputs. Desired outputs are those variables the system must provide in order to satisfy the identified needs:

Transportation:

--Daily transportation for 1-2 people possibly going to different places at the same time. (10-20 miles/day)

--Transportation for family of five. (25-50 miles/week)

--Long trip (1000-6000 miles) for family of five and baggage. (once per year)

Reliability:

--Available generally when needed. (On call within x_1 minutes on the average)

--Low "failure" rate.

Safety:

--Low risk for family members.

--Low risk for others.

Economy:

--Acceptable operating costs. (Less than x_2\$/month or \$/mile)

--Acceptable initial outlay. (Less than x_3\$)

Comfort:

--Protection from rain, snow, etc.

--Winter comfort. (Temperature)

--Summer comfort. (Temperature)

--Freedom from excessive shock, vibration.

--Ample room for family.

Performance:

--Speed--short trips. (MPH) (at least x_4MPH)

--Speed--long trips. (MPH) (at least x_5MPH)

--Acceleration, etc.

<u>Undesired outputs</u>. Undesired outputs are often the opposites of the desired outputs (i.e., personal risk the opposite of "safety") but to include these opposites would be redundant. We look for other unwanted

system outputs. In this case environmental pollution (air, noise, etc.) would be relevant along with losses due to accidents and/or legal actions:

Pollution:

--Operating noise level.

--Air emissions.

Losses due to accidents and/or legal actions. (Less than x_6\$ per incident)

Environmental Inputs. In this case environmental (exogenous) system inputs might include:

--Prices of vehicles and related inputs, gas, oil, etc. \$/unit

--Public transportation rates. (\$/mile, \$/trip, etc.)

--Rental rates. (\$/mile, \$/month, etc.)

--Insurance rate structure.

--Tax structure as it applies to vehicle ownership or use.

--Weather--temperature, rainfall, etc.

--Interest rates. (%/month)

--Changes in style, obsolescence.

Overt Inputs (Controllable). This category includes variables that can be managed during system operation to alter the performance of the system in providing desired outputs. (While these variables do not always enter the system design process they become extremely important in managing the system once it's in operation.) These might include:

--Frequency of discretionary trips. (No./unit time)

--Distance of discretionary trips. (Miles)

--Frequency and level of preventative maintenance (if vehicles owned). (No./unit time, \$/unit time.)

--Expenditures on insurance (\$/yr.)

--Payments to principle and interest ($/yr.)

--Type of fuel (if owned).

Overt Inputs (Non-controllable). These variables, while not important in altering the performance of the system in operation, are necessary inputs that must be provided in order for the system to function. Note that they are not environmental inputs because they are overtly provided by the system designer or operator. While not significant in the design process here, they would include such things as oil in the crankcase and water in the radiator of a car.

Design Parameters. Those important decision variables which are attributes of the system structure and have an impact upon the system desired outputs. Included might be:

--Particular modes of transportation selected (i.e., auto, bus, airplane, bicycle, etc.)

--Number of modes of transportation used. (Less than c_1)

--Number of vehicles purchased or rented. (Less than c_2)

--Makes of vehicles acquired or rented.

--Ages of vehicles purchased or rented. (Less than c_3)

--Sizes of vehicles acquired. (Length less than c_4 feet)
(Width less than c_5 feet)
(Height less than c_6 feet)

--Length of ownership of vehicle. (Years)

--Length of rental agreements. (Years)

--Commercial companies selected for public transport or rental of private vehicles.

--Persons involved in car pool arrangements. (Less than c_7)

--Type of financial arrangements. (Size of down payment ($), etc.)

--Types of insurance.

--Amounts of insurance. ($)

--A host of parameters which apply to the particular modes of transportation selected--power plant size, space available for seating, space available for luggage, comfort related options, safety related options, entertainment related options, etc.

Measures of System Performance. These are criteria which are relevant in choosing among alternative system designs. Included might be:

--Average discounted total cost. ($/mile)

--Average discounted total cost. ($/year)

--Discounted total cost over some fixed time horizon. ($)

Problem Statement for the System Design Problem

Determine the various design parameters (i.e., determine modes of transportation, number of vehicles, types and ages of vehicles, etc., etc. such that the following conditions hold:

--The identified desired outputs are provided. (i.e., detailed, transportation outputs, comfort, performance, safety, etc.)

--The undesired outputs are at acceptable levels.

--The identified constraints which apply to outputs, inputs and parameters are not violated.

--The appropriate measures of system performance are "optimized."[1]

---

[1]While formal optimization may not be feasible due to the non-existence or a suitable all-inclusive measure of performance, "optimization" suggests choosing system parameters so that results are "good" or "best" with respect to the value systems of the decision makers involved.

A couple of final thoughts. This is not a problem definition suitable for the problem of managing the transportation system once it is in operation. This undertaking, involving the controllable inputs identified above, also follows logically from the (braod sense) system identification described above. With the problem defined, the system analyst moves deeper into the feasibility evaluation phase by generating alternative system concepts (many of these have been suggested by the identification of system parameters). Further progress will undoubtedly uncover information which will alter the initial problem statement somewhat (new design parameters may be discovered, etc.) This is life in an iterative process!

Generation of System Alternatives. With the problem explicitly stated, system objectives are clearly in focus and we are now able to seek a broad range of particular system alternatives. "Alternatives" here include alternative ways of structuring the desired system if the problem is to design a non-existing system and alternative management strategies if the problem is to manage an existing system. As examples of a design alternative, we could identify in the above example "lease two automobiles ...," "use public transportation ...," "buy one automobile and use public transportation ...," etc. Management "alternatives" can be defined on the basis of alternative control laws, management information systems, etc. This part of the study requires the greatest possible infusion of creativity, for new concepts can result only from creative synthesis. Brainstorming and other idea stimulating techniques are often employed to generate the broadest spectrum of approaches to the problem. A positive noncritical atmosphere conducive to stimulation of ideas should pervade this sub-phase as critical evaluation of concepts follows with subsequent activities of feasibility evaluation. Subsequent sub-phases act

as filters to block unrealizable concepts and to pass those which merit further attention.

Determination of Physical, Social and Political Realizability. The first "filter" blocks those system alternatives which cannot be implemented physically or would not function in the existing social and political environment. Physical realizability is determined, for example, by basic laws of physics, the properties of materials, and the ability of system sub-systems and components to fit together compatibly. Note that we are

talking here about the physical feasibility of realizing a given concept and not the economic practicality of doing so. Thus, a system to put a man on Mars appears to be physically realizable.

Social and political realizability are also significant issues. In the past, the effectiveness of certain large-scale systems has been reduced because of incompatibility with characteristics of human behavior. For example, the use of freeways as a solution to the transportation problem in certain large cities has been inadequate due, in part, to an unforeseen increase in traffic induced by the existence of the freeways themselves.

Some systems must also pass the test of political realizability--that is they must be implementable in the political system which prevails or will prevail. One must not be too hasty in rejecting alternatives on this basis, however. It may be that adjustments in the prevailing political order are necessary to achieve acceptable performance of basic systems of society. One benefit that can accrue from sound systems analysis is knowledge of what "might be" if changes are made in political processes. Clearly, evaluation of realizability for complex societal systems is not an easy thing to do. Little has been said to this point about the organization required to implement the systems approach but experience has shown that such studies require teams of specialists from many disciplines who can interact effectively to bring the right mix of expertise to bear at various points in the problem-solving process. Evaluation of realizability is certainly most demanding of wide disciplinary inputs.

Determination of Economic and Financial Feasibility. Candidate system alternatives which pass tests of physical, social, and political realizability are now subjected to economic analysis. The two fundamental questions that are asked of each are: Is it profitable? and: Is it financible? To establish

profitability, it must be shown that the goods or services provided by the system concept will have a value to the recipients which equals or exceeds the cost of producing those goods or services and that individuals or institutions of society will be willing to pay the price of providing them. While it is impossible to establish with absolute certainty, the profitability or non-profitability of a given undertaking, analysis of costs and expected incomes can determine which concepts have a high probability of economic success.

The question concerning financibility must also be posed because it is entirely possible for an economically worthwhile project to be financially unsupportable. Availability of financial resources through credit, bond issues, savings and other means must be examined for each system concept under serious consideration.

System concepts which, in addition to passing tests of realizability, prove to be profitable and financible, are viable concepts worthy of further consideration and constitute the input to the next major methodological phase--abstract modeling.

An Example of Feasibility Evaluation Applied to Rural Development in a Lesser Developed Country

Before moving into a discussion of the abstract modeling phase of the systems methodology, we will present another example to illustrate the practical application of concepts and methods of Feasibility Evaluation. This time the problem has a strong management flavor. That is, a large part of the task is to determine effective management policies for a system that is already in existence. The example chosen is adapted from a U. S. foreign assistance project aimed at developing computer simulation models to assist governments in the formulation of rural development policies in developing countries.

For purposes of our example here we will approach the problem from the point of view of government decision makers faced with the problem of establishing broad policies for rural development of a specific country. The example in many ways reflects the experiences of a systems team that addressed this problem in a particular country.

It is not practical to present a complete description of an appropriate Feasibility Evaluation for this complex problem, however, a number of essential elements will be described. Also, it should be pointed out that results, such as described here, are the product of considerable iteration and interactions involving decision makers and specialists from many fields and much information processing--they are not obtained from "one pass" through the steps outlined in Figure (2).

Background and Description of Needs

The "needs" to be addressed by rural development policies in emerging countries are many. These compete for extremely limited resources and raise important questions about public development priorities. Simulation models have been explored as a means of evaluating the multiplicity of development alternatives and their consequences as measured in terms of the many relevant performance criteria. Some of the important needs in this problem setting are listed as follows:

- Adequate nutrition (calories, protein, etc.) for the people of the country--rural and urban by region within the country)
- Generation of foreign exchange from export of agricultural commodities (to stimulate development of the country as a whole)
- Increased disposable income for rural people (to enhance quality of life)

4. Equitable income distribution
   a. rural vs. urban
   b. region vs. region
   c. among rural people within regions
5. Generation of employment
6. Public health
7. Basic education
8. Housing
9. Generation of tax revenue to fund public programs
10. Long-run environmental compatability of man-made processes
11. A number of other important needs at the personal level (social, psychological, spiritual)

These needs led to definition of the system "desired outputs" in system identification.

System Identification

As a result of considerable study a working definition of the "system" was established. It became clear that the "system" was not just the rural sector of the economy with its physical, social, political, economic, biological and other dimensions. Strong economic, social and political interactions with the rest of the country made it necessary to include the "rest of the country" in the system (though these aspects were not treated at the same level of detail as was the rural sector). It also became clear that those parts of "the rest of the universe" that were significantly affected by the rural development process must also be included "in the system." These included world commodity markets that could be affected by policies aimed at expanding rural based exports.

The "system" then was defined as the rural sector with its multiple dimensions, the rest of the country, and those world commodity markets likely to be affected significantly by the policies being explored in the analysis. (In later analysis minimum possible detail was given to the "rest of the country" and the world commodity markets).

Various variables of System Identification along with units of measure and constraints, where appropriate, are as follows:

Desired Outputs

1. Nutrition--by region and rural/urban calories/person-yr. (> C_1)
   protein--grams/person-yr. (> C_2)
2. Foreign exchange earnings from rural exports ($/yr.)
3. Rural disposable income by region by size of enterprise--$/person-yr.
4. Urban disposable income--$/person-yr.
5. Rural employment by region--man-years/year
6. Urban employment--man-years/year
7. "Public health" as measured by variables such as average life expectancies and mortality rates
8. Rural education (by region)--years/person
9. Tax revenue generated by the rural sector--$/yr.
10. Housing (persons/room or other measure)
11. Rural contribution to gross national product--$/yr.
12. Non-rural contribution to gross national product--$/yr.
13. Gross national product--$/yr.

Undesired Outputs

1. Nutrient pollution in lakes, streams, etc. by region
2. Chemical pollution due to pesticides, herbicides, etc. by region--parts/million

3. Deterioration of soil due to errosion, etc.
4. Various adverse social consequences due to technological and other change

Environmental Inputs

1. Weather related variables: amount and distribution of rainfall and sunlight, length of growing seasons, temperature and humidity over time (all measurable in appropriate units)
2. Interest rates on foreign loans (%/yr.)
3. Availability of foreign credit ($/yr.)
4. Nominal world commodity prices ($/unit)
5. Foreign technical assistance by category--men/yr, $/yr., etc.
6. "Imported" technologies as measured by technical coefficients

Overt Inputs--Controllable (by policy makers)

1. Levels and timings of investments in new technologies (research by commodity--$/yr.)
2. Levels and timings of investment in promulgating new technologies by commodity by region ($/yr.)
3. Levels and timings of investment in infrastructure--roads, power, communication, etc. by region--$/yr.
4. Levels and timings of investment in land and water development by regions--$/yr.
5. Public rural credit by region, commodity, etc.--$/yr.
6. Levels and timings of subsidies by commodity, by region, by function (production, marketing, processing, etc.)--$/yr.
7. Interest rates (%/yr.)

8. Type of tax structure (i.e., income, production, etc.) by category (%)
9. Price policies on production outputs by commodity ($/unit)
10. Investments in infrastructure to stimulate interregional trade by region ($/yr.)

Overt Inputs--Non-controllable (necessary system inputs not useful as means of managing performance)

1. A number of rural "overhead" functions carried out by government

System Design Parameters

1. Scales and locations of public works--irrigation, land reclamation, etc.
2. Number, location and type of roads
3. Specific technologies promoted by commodity and function (production, marketing, processing, etc.) (described by sets of technical coefficients)
4. Discount rates (%)

Measures of System Performance

1. Most of the "desired outputs" outlined above
2. Many of the desired outputs accumulated (and perhaps discounted) over some time horizon T years, i.e., accumulated foreign exchange earnings ($), rural contribution to gross national product ($), accumulated rural tax revenue generated ($), accumulated gross national product ($), etc.
3. Capital generated over same time horizon by region by function (production, marketing, etc.)--$
4. Cost-benefit ratios where appropriate to measure effectiveness of various programs and projects.

Problem Formulation

It is not feasible in a complex problem setting such as this one to initially state the problem in terms of specific targets to be achieved. (Specific values for the desired outputs) Highly complex trade-offs exist among "goods" and "bads" that depend upon endogenous interactions of the system and levels of scarce resources available for development and it is not clear at the outset what targets are feasible. The decision maker's problem in this case can be stated as "Determine a set of consistant targets for the system performance variables and a set of (perhaps time varying) policies for attaining them given the decision variable, environmentive inputs and constraints of system identification." On the first trip through the Feasibility Evaluation cycle alternative solutions to this problem are sought and there are two fundamental ones: an ad hoc - "seat of the pants" approach that proceeds without the use of formal models and an approach that employs models where it is of assistence to do so. In most cases the latter approach is chosen because of the enormous problem complexity and the fact <u>some</u> form of quantitative analysis will usually be able to improve on the alterrative - no models at all. The nature of the modeling effort will be dictated by the resources available - men, money and computers. In the particular case we're examining, a skilled team, several hundred thousand dollars and a large computer were available. The rest of this example will deal with the problem of designing appropriate decision making models for the rural - development problem identified above. This new problem is formulated by specifying the characteristics of models that can be used to help resolve not only the normative questions of objectives or "targets" but also questions of how to use available decision variables to achieve desired results

efficiently. In this, second iteration, then, "Problem Formulation" involved defining the specifications for models which could address the real problem. A possible problem statement becomes "design a model or models that will compute, over the time horizon of interest, the time varying values of system outputs (desired and undesired) as influenced by environmental inputs, and the alternative values assigned to decision variables (the controllable inputs and design parameters)." This is not, however, a workable problem statement because it is infeasible of solution. It was clearly not feasible to model all the variables and interactions known to be relevant. Underlying theory was inadequate in some cases and budget and time limitations did not permit resolution of a number of other important questions. The options in this case are two: to abort the modeling project as infeasible or to proceed with the development of a truncated model(s) that, while omitting a number of relevant factors, contains enough substance to be "useful" to decision makers if used with caution. This particular project took the latter route--many important phenomena could be modeled and model results could be expected to add significantly to decision makers' understanding of key policy issues. Thus, in effect, the problem formulation became "to build, within the resources available, the most "useful" model (by including as many high priority variables of system identification as possible)." There is, of course, the danger here of forgetting about what's not included in the model and not interpreting model results accordingly. A workable problem statement should go on to say that model results are to be interpreted and implemented in light of the specific inputs outputs and parameters

which have been left out of the model and with the benefit of a wide range of supplementary information which deals with factors which do not appear explicitly in the models.

Generation of System Alternatives

Given the above problem formulation "system alternatives" become alternative models or sets of models which might be constructed to address the policy questions which have been identified. It became clear that many alternative models could be conceptualized based on certain fundamental choices that must be made. Many of these choices have to do with assigning values to the "design parameters" of the model. These are listed below along with other criteria that are important in defining alternative models:

1. The particular ecological regions defined for purpose of disaggregating agricultural production and consumption.
2. The particular regions defined for purposes of interregional trade.
3. The food and nonfood commodities or commodity bundles chosen for modeling.
4. The age distribution categories chosen for modeling human demography.
5. The particular set of decision variables (controllable inputs and design parameters) chosen for inclusion from the list of possible choices.
6. The particular set of output variables chosen for inclusion from the list of possible choices.
7. The time perspective of the model as determined by the nominal length (years) of simulation runs to be made and the finest

time interval models are capable of computing results for.

8. The political levels of policy entry points (i.e., state, federal)
9. The political levels at which performance variables are computed.
10. Configuration of models (one large integrated model, several independent models, etc.)

Different combinations of choices made with respect to these parameters and issues lead to a vast number of possible system models. While there is no way of finding an "optimum" solution to this complex problem, the "sifting" of feasibility evaluation to be described greatly reduces the number of feasible choices to be considered.

It became clear early that a large integrated model was necessary because of the high degree of interaction within the system. (This could perhaps be supplemented by smaller, independent, special-purpose models). Eliminating non-feasible choices: Attention also focused early on identifying the performance variables and decision variables it was feasible to incorporate in the model. This, by exclusion, eliminated the following variables from <u>explicit</u> consideration: rural general education (technical education to be included); public health; rural housing; impacts of policies on air, water and soil; social, political, moral, psychological impacts; income distribution among rural people within regions. These exclusions were made on the basis of lack of adequate theory, lack of data and lack of time and money to carry out this analysis.

Ideally, one would like to have the most detailed model(s) possible (vis-a-vis regions, commodities, demographic age cohorts, etc.) to

increase accuracy of results and the range of policy questions that can be addressed. Budget and computer limitations on the other hand argue that level of model detail be minimized. In this case a compromise was struck which included two major food commodities, and the five non-food commodities most important as sources of income for rural people and foreign exchange earnings for the country as a whole. Two trading regions were defined which made it possible to study a major interregional trade policy question. Each trading region was disaggregated into four ecological regions for realistic simulation of production of the chosen commodities. The non-rural sector of the economy was modeled by a ten-sector input output table with dynamic linkages to investment. Rural and urban populations were modeled in terms of two-year age cohorts along with a primitive mechanism for rural/urban migration.

Interdependent with these decisions were choices as to the decision and performance variables to exclude and include on the basis of feasibility. The following decision and performance variables were retained:

Decision Variables:

1. Levels and timings of investments in new technologies (research) by commodity
2. Levels and timings of investments in promulgating new technologies by commodity by region by function
3. Level and timing of infrastructure as it affects interregional trade.
4. Levels and timings of production subsidies--by commodity--by region
5. Interest rates

6. Tax structure and rates
7. Price policies on production outputs--by commodities.
8. Specific new production technologies promoted--by commodity
9. Discount rates

Performance Variables:

1. Nutrition by region and rural/urban
2. Foreign exchange earnings from rural exports ($/yr. and $ accumulated over some time horizon)
3. Rural disposable income--by region and sub-region
4. Urban disposable income (aggregate)
5. Rural employment--by region
6. Urban employment
7. Tax revenue generated by the rural sector ($/yr. and $ accumulated over time horizon)
8. Rural contribution to GNP
9. Non-rural contribution to GNP
10. GNP.
11. Capital generated by region by function
12. Benefit/cost ratios on specific investments

The relevant time horizon for the model was chosen as 0-25 years in order to address the range of relevant policy questions.

The above specifications, the result of iterative application of the Feasibility Evaluation phase of the systems--methodology, describe a simulation model that was constructed for the particular country in question. This model is discussed in some detail in Chapter 17.

Concluding Observations

The example chosen here is a "messy" one. The problem is extremely large and complex and for this reason "Feasibility Evaluation" is not nearly as clear-cut as it is in better understood situations. This very complexity suggests a number of important cautions to observe when dealing with models applied to development issues in emerging countries. Even though these are specific to this example, they should be mentioned to place the above example in its proper perspective vis-a-vis operational usefulness. Also, similar things could be said about a "systems" approach to other complex societal problems. It is very easy to get "hung up" on models. Their complexity and detail can divert attention from common-sense thinking about the problem which can contribute directly to clarification of policy issues. It is also very easy to forget the detailed variables and issues that are not included explicitly in models and many other collateral studies of a more qualitative nature are also necessary in policy formulation. These must also be designed and implemented as part of the "systems approach" to development.

The model described above is capable of providing policy insights into questions of <u>what</u> to do and <u>when</u> to do it. An inadequacy of this model is it's inability to cope with questions of "how to do it" and these are very important in the development context. A great deal of organization and planning are necessary for effective and timely implementation of actions that are known to be desirable. Other kinds of models--critical path, etc., can be useful here. This organization and planning must be done during the "Implementation Design" phase of the systems methodology.

Another aspect of the model conceptualized during Feasibility Evaluation is its tentative nature. Further work in modeling and application will suggest changes and refinements as part of the iterative problem solving process. Further, it will be possible as more time and resources become available to expand and refine a model, such as described above. to include more factors known to be relevant in the problem solving process and to refine the data base where model results (sensitivity tests etc.) indicate that this is necessary.

A final observation the frame of reference for the problem above is that of planning at government levels. While it is true that public policies play a necessary role in the development process by stimulating beneficial changes, these cannot in themselves guarantee development and improvement of quality of life. Human beings are still free moral agents able to make choices which lead to progress or stagnation, social harmony or chaos. Clearly, human values and morality are of fundamental importance. Human wisdom can only deal with these issues relativistically. Only a divinely revealed religion can speak with authority in the areas of values and morals. If a supreme being has spoken in these areas, as many believe He has,[1/] then we should listen and apply at all levels of the social order.

Abstract Modeling

While it is certainly true that some systems are much more amenable to abstract modeling than others, it is safe to say that *some* form of

---

[1/] Francis A. Schaeffer, *The God Who is There*, Intervarsity Press, Downers Grove, Illinois, 1968.

abstract representation is useful in almost every situation. Also, the level of sophistication employed in modeling may vary widely depending upon the nature of the system being studied, but irrespective of this, the process of abstract modeling is relatively invariant with respect to level of sophistication and system type. A flow diagram of this general abstract modeling process is shown in Figure 4.

Abstract modeling receives as its inputs the viable system alternatives of Feasibility Evaluation. This phase develops and implements models which are used to design "good" or "best" pragnam policies, etc. to be implemented in the real world in subsequent phases. Its outputs then are then detailed descriptions of prescribed actions.

Alternative Selection

The first sub-phase of abstract modeling is alternative selection. Since it is possible that a number of feasible system alternatives can emerge from Feasibility Evaluation, it is necessary to give careful study to the question of which alternative or alternatives are to be selected as superior and worthy of abstract modeling. The detailed work of Feasibility Evaluation will often provide considerable insight into the relative merits of candidate alternatives making selection of a particular one straight forward. In other cases, more than one alternative may be carried into the initial phases of abstract modeling thus deferring selection until more information is available upon which to base a decision. In any case, selection of a particular concept should be regarded as tentative--to be finalized only when later evidence warrants. Final selection of a system alternative is a crucial decision which greatly influences the cost and performance of the resulting system. Interactions

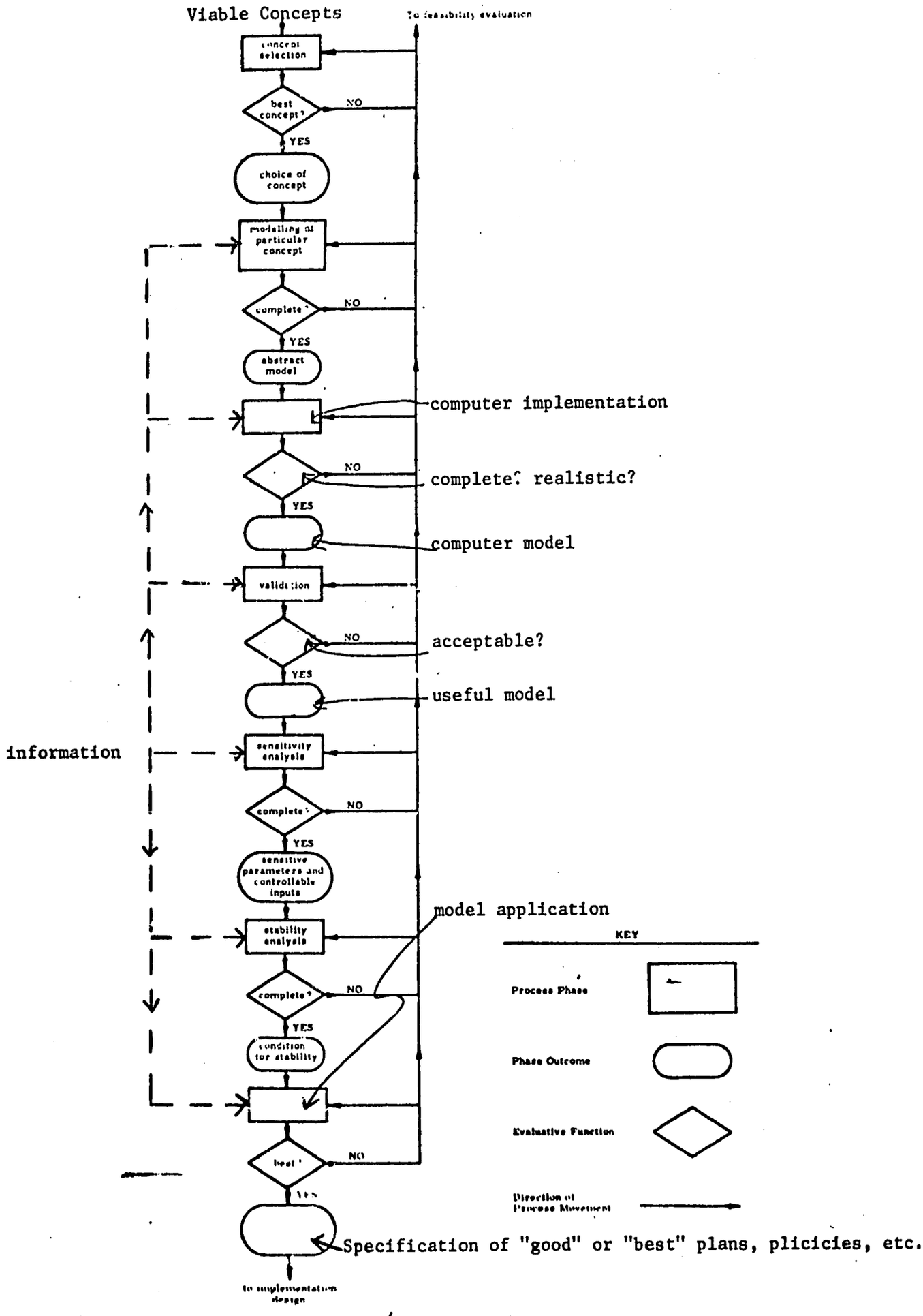

Figure 4. Abstract Modeling

with responsible decision makers and other persons strongly involved with the system are of crucial importance in alternative selection.

Modeling

Abstract modeling involves a choice of the type of abstract representation that is most appropriate in the given situation. In general, abstract models may be classified in two ways giving a total of four basic model types. Models may be either static or dynamic in time. A static model provides information about the model variables only at a single point in time. A dynamic model, on the other hand, is capable of generating the time paths of model variables. Thus, the model designed by Pool and Abelson (10) to forecast the outcome of a national election is a static model while Holland's model (7) of a developing economy which traces the time paths of variables such as gross national product, balance of payments, investment, etc., is a dynamic model. In general, dynamic models are more difficult and expensive to construct but at the same time are more powerful and say a great deal more about the real world.

A second classification depends upon whether the abstract model takes a microscopic or a macroscopic view of the real world. A microscopic model seeks to represent the individual units that actually exist in the real world as for example individual cars in a stream of traffic and individual customers moving through a queue. In a macroscopic model on the other hand, individual units lose their identity since model variables typically relate to aggregates of system units. Examples of macroscopic variables are electric current (the rate of electron flow past a specified point), the flow rate of automobile traffic past a given point and the flows of economic goods and services.

According to these two two-way classifications abstract models may be of the four following basic types:

1. Microstatic
2. Microdynamic
3. Macrostatic
4. Macrodynamic

The choice of particular model type depends upon the objectives of the system study and will often be obvious from the problem statement developed during Feasibility Evaluation. In particular cases hybrid abstract models comprising two or more of the four basic types may be necessary to adequately model the proposed system.

Given the type of model to be employed, the task of the modeling sub-phase is to develop a realistic abstract model. There are two distinct approaches to the problem of generating an abstract model. The first will be called the "black box" approach here. Essentially this method seeks to identify a system model from data describing the past behavior of the system. Through various statistical and mathematical techniques a model is derived which in some sense is a "best" fit to the operational data (see Chapter 18). This approach has developed independently in the social and physical sciences. The disciplines of "econometrics" is representative of the social science stream of development while much of the work done in "system identification" in various areas of engineering employs "black box" methods.

The second basic approach to system modeling is what will be called here the "structural" approach. Use of this method begins by carefully

examining system structure and theory to determine basic system components and their interconnections. By modeling the characteristics of system components and the constraints imposed by their interconnections, an overall system model is developed.* The structural approach has been used extensively in the design and control of physical systems and there are increasing applications of this approach to non-physical systems (3, 4, 7, 8, 9).

These two basic means of constructing system models should be regarded as complementary--each possessing unique capabilities and limitations. For example, the "black box" approach is based on observations of an existing system and is useless for system design where no system exists and the task is to conceptualize one. On the other hand, in certain control problems the task at hand is to control an existing system whose inner workings are unknowable. In this case, the "black box" approach is the only recourse. In summary then, the nature of the system will determine which of the techniques should be applied or in what combination they should both be applied. Clearly, use of the two approaches together brings more information to bear on the modeling problem and will generally lead to better models than either approach alone.

The modeling sub-phase involves careful checking of model assumptions, internal consistency, data inputs, etc., and, where possible, comparisons with real world performance. In the main, however, the question of model validity is deferred until after a computer implementation sub-phase.

The output of the modeling sub-phase is a description of an abstract model which has passed preliminary tests for validity.

---

*A student recently was able to model the hog price cycle only after including "structure" in terms of hog population-growth equations.

Computer Implementation

Models developed in the prior sub-phase are in the form of equations, block diagrams, flow charts, etc. In all but the simplest cases it is desirable to use computers to get solutions of models which can enter the decision making process leading to system plans and policies. "Computer Implementation" develops a "model of a model"--another level of abstraction removed from the real world. Important decisions must be made in this sub-phase which affect the accuracy of computer solutions, the cost of operating models, the compatibility with available computers and the effectiveness of the decision-making process which uses model results and affects changes in model inputs or specifications. A key question here is the choice of computer language and techniques used to implement the abstract model. This issue is discussed in Chapter 14. Once the abstract model is implemented via the chosen programming medium and appropriate input/output formats have been designed, this sub-phase moves on to verify that the computer model does, in fact, adequately simulate the underlying abstract model. (Some useful tests for studying this question are described in Chapter 11. These tests are often interdependent with tests to establish the validity of the abstract model itself). Given a computer model that is accepted as being a reasonable approximation to the abstract model of the system, attention turns to the important question of the validity of the system model itself as a model of the real world.

Validation

Validation seeks to establish whether or not the system model is a valid representation of reality from which valid conclusions from the real

world can be drawn. In reality, "validation" is often one link in an iterative loop of Figure (4) that leads to successive tests and refinements in the model and ultimately, if all goes well, to a model accepted for use in system planning or management.

Validation usually begins with "coarse" tests for necessary conditions for validity, i.e., variables of correct signs and right order of magnitudes, correct form of response (exponential, oscillatory, etc.), variables move in proper directions when inputs or parameters are changed, limiting values of variables appropriate when parameters go to limiting values, etc. Such tests will often detect model inadequacies which lead to model changes and retesting, more iteration!

If the model describes an existing system which is to be controlled, validation involves demonstrating that the model exhibits behavior characteristics of the system itself. This may be done by attempting to reproduce past system behavior (not used in construction of the model) or by using the model to forecast future system behavior. Statistical tests are available in certain instances for testing hypotheses regarding validity though much more work is needed in this area (5,11).

If the mathematical model is to be used to design a system which does not yet exist the validation techniques mentioned above are not feasible. Model validity rests upon the validity of the various theories and assumptions which determined the structural form of the equations of the model and the values assigned to model parameters. Carefully designed model tests can generate additional evidence to argue for or against acceptance of the model as a system design or management tool. Once a

model has been coarsely validated and tuned to be in the "ballpark," it is often useful to carryout "sensitivity tests" on the model coefficients for which accurate estimates are not currently available. Such coefficients can be changed singly or in groups[1/] in repeated simulation runs to determine which are significant in their impact upon important model outputs. This information can lead to the establishment of priorities for further information gathering, data collection, improved estimates for key coefficients and refined models which include the improved estimates. Experience has shown that these sensitivity tests carried out at an appropriate point in the validation process can make data acquisition much more efficient and significantly improve model performance. The fact that models can be useful in determining data gathering priorities suggests that the decision of when to begin model construction is an important one and that there is a desirable balance to be struck between data acquisition and model building activities.

In many situations, including some toward the socio-economic end of the spectrum, complex models have been successfully constructed, validated and applied to real world problems. For many complex systems, however, the problem of model validation is a thorny one. While it is never possible to have absolute certitude concerning model validity, the lack of real world data, time, theory and resources may prevent adequate testing for validity. The pressures on decision makers are often such that important decisions are going to be made with or without the help of models. In complex decision making environments the alternative to using a partially validated

---

[1/] Coefficients should be varied in proportion to the uncertainty in the current estimate--for example an estimated standard deviation.

model (not using the model at all) may be less desirable from the standpoint of practical consequences. Models can be used, guardedly to assist decision makers in exploring and understanding policy issues. The results of these limited model applications provide further evidence on the question of model validity and can lead to further model refinements where necessary. This "limited application" philosophy may well be a normal part of the validation procedure for models addressing complex societal problems.

Sensitivity Analysis

The primary purpose of "sensitivity analysis" at this point in the abstract modeling process is to determine which decision variables (design parameters and controllable inputs) are important enough to include in subsequent model applications to derive a "good" set of plans, policies, etc. Such tests can eliminate unimportant factors, focus attention on the key decision variables and improve the efficiency of the decision making process. The latter point is an important one because it is easy to become inundated with alternative courses of action. In some cases, knowledge of the design variables which are of lesser importance in affecting system performance can provide additional freedom to satisfy necessary constraints which may apply to inputs and parameters.

Stability Analysis

It is well known that dynamic systems can exhibit destructive unstable behavior for certain values of system parameters. The purpose of Stability Analysis is to identify the stability boundaries of the system so that critical

parameters will not be unknowingly set at values which could lead to unstable behavior over time as system structure or environment change. Stability Analysis can employ analytical studies based on stability theory, use of repeated simulation runs to explore stability boundaries or both of these techniques. Later chapters of this book discuss useful stability theory for certain classes of systems.

Model Application

While decision makers have played an important role in systems activities to this point, they now become the central figures as models are operated to study policy questions in detail. More exactly, they are the directors of a creative-interactive process that involves systems analysts, specialists from a variety of disciplines which bear on policy questions, and the results of successive policy experiments conducted with the model(s). This process involves use of the models to explore results of an initial set of policy options, analysis and critique of options based on factors endogenous to the model and external factors which have not been explicitly included in the model, creative synthesis of "better" policy options, re-simulation, re-evaluation, re-synthesis of alternatives, etc., etc.

Where there is no unique decision-making criterion to be maximized or minimized this interactive process can lead to a resolving of normative issues dealing with trade-offs among system performance variables, and further, to a set of policies for efficiently attaining the mix of system outputs valued as "good." In other cases the interactive process can lead to the definition of a criterion to be optimized subject to a set of carefully specified constraints on other system variables not specifically entering the performance criterion selected. Where an optimization problem is germain to the resolution of policy issues, the "Model Application"

sub-phase includes this activity as well. Many optimization techniques (linear programming, dynamic programming, nonlinear programming, etc.) are available for practical problems, and some of these are compatible with the large simulation models often needed to explore real world design and management problems.

The "output" of the Abstract Modeling phase is the detailed set of management and/or design specifications generated by Model Application. These specifications constitute the primary input to the Implementation Design phase of the systems methodology which carries out the detailed planning necessary to implement the desired actions. Information developed during later system phases, changes in environmental variables, etc. can indicate the need for repetition of activities of Feasibility Evaluation and Abstract Modeling. In some cases this may mean simply operating models under a different set of assumptions regarding input and parameter values. In other cases it may involve new models or extensive structural modifications to existing models. This is consistent with the fact that system design and management in a dynamic environment is a continuous process involving adjustment and adaption through time.

Bibliography

1. Asimow, Morris, Introduction to Design, Prentice Hall, Englewood Cliffs, 1962.

2. Churchman, C. W., The Systems Approach, Dell, 1968.

3. Forrester, J. W., Industrial Dynamics, MIT Press, New York, 1961

4. Forrester, J. W., Urban Dynamics, MIT Press, Cambridge, 1969.

5. Gilmour, Peter, Development of a Dynamic Simulation Model for Planning Physical Distribution Systems: Validation, Unpublished Ph.D. dissertation, Michigan State University, East Lansing, 1971. (Contains a good survey of alternative statistical methods for validating simulation models.)

6. Hall, A. D., A Methodology for Systems Engineering, Van Nostrand, Princeton, 1962.

7. Holland, E. P. with R. W. Gillespie, Experiments on a Simulated Underdeveloped Economy, The MIT Press, Cambridge, Massachusetts, 1963.

8. Koenig, H. E., and R. L. Tummala, Principles of Ecosystem Design and Management, IEEE Transactions on Systems, Man and Cybernetics, Vol. SMC-2, Number 4, Sept. 1972.

9. Manetsch, T. J., et al., A Generalized Simulation Approach to Agricultural Sector Analysis With Special Reference to Nigeria, Michigan State University, East Lansing, 1971.

10. Pool, I. S., and R. P. Abelson, "The Simulmatics Project," Public Opinion Quarterly 25, (Summer, 1961).

11. Van Horn, Richard, "Validation" in The Design of Computer Simulation Experiments Thomas H. Naylor, ed., Duke University Press, Durham, N. C., 1969.