AGENCY FOR INTERNATIONAL DEVELOPMENT
WASHINGTON, D. C. 20523

BIBLIOGRAPHIC INPUT SHEET

FOR AID USE ONLY
Batch #31

1. SUBJECT CLASSIFICATION

A. PRIMARY: Agriculture — AE10-0000-0000

B. SECONDARY: Agricultural economics

2. TITLE AND SUBTITLE

PERT programming methods for project appraisal,a computer program

3. AUTHOR(S)

Hanratty,Martin

4. DOCUMENT DATE	5. NUMBER OF PAGES	6. ARC NUMBER
1975	51p.	ARC

7. REFERENCE ORGANIZATION NAME AND ADDRESS

Mich.State

8. SUPPLEMENTARY NOTES (Sponsoring Organization, Publishers, Availability)

(In Agr.economics rpt.no.290)

9. ABSTRACT

10. CONTROL NUMBER

PN-AAB-770

11. PRICE OF DOCUMENT

12. DESCRIPTORS

Computer programming
PERT
Project evaluation

13. PROJECT NUMBER

14. CONTRACT NUMBER

CSD-2975 Res.

15. TYPE OF DOCUMENT

AID 890-1 (4-74)

PN-AAB-770
CSD-2975 Rec.

Agricultural Economics Report

NUMBER 290 MAY 1975

PERT PROGRAMMING METHODS FOR PROJECT APPRAISAL—A COMPUTER PROGRAM

Martin Hanratty

Department of
Agricultural Economics
MICHIGAN STATE
UNIVERSITY
East Lansing

PERT PROGRAMMING METHODS FOR PROJECT APPRAISAL--A COMPUTER PROGRAM

AGRICULTURAL ECONOMICS REPORT No. 290

MARTIN HANRATTY
MICHIGAN STATE UNIVERSITY
16 MAY 1975

PREFACE

PERT Programming Methods for Project Appraisal--A Computer Program has been developed to assist project analysts and students who wish to use critical path analysis as a planning tool in project scheduling and evaluation. The manual is an outgrowth of a workshop project prepared by the author while enrolled in a graduate seminar in development planning and agricultural sector analysis in Spring 1974 at Michigan State University. The computer programs appearing in the manual are written in FORTRAN IV and are designed to run on the CDC 6500 facility at Michigran State University although they can easily be adapted to other computer installations.

The development of the manual and computer programs could not have been done without the generous support and guidance of a number of individuals and organizations. Financial and logistical services were provided by the Michigan State University Agricultural Sector Analysis and Simulation Projects under a contract with the U.S. Agency for International Development (Contract AID/csd-2975). Encouragement and advice on the manuscript were given by Drs. George E. Rossmiller, Lawrence Libby and Michael Abkin. Mrs. Ellen Vander Lugt and Ms. Edith Nosow provided advice and assistance in the preparation of the final manuscript for printing.

Martin Hanratty
East Lansing, 1975

Introduction

The Program Evaluation and Review Technique (PERT) is a method of planning, replanning, and evaluating project implementation. The technique provides project administrators and planners with information which can be used to monitor and adjust a planned or ongoing project. The technique is helpful in insuring the attainment of project goals within a minimum time period. The technique was developed during the late 50's at the Navy's Special Projects Office by a team studying the application of statistical and mathematical methods to the planning, evaluation, and control of the research and development of new defense systems. It found its first application in the development of the Polaris missile, where it was used to coordinate over 3,000 different project activities. The use of the technique resulted in the completion of the project over two years earlier than originally anticipated.

Since its inception PERT has undergone continuous development. Its application to a wide variety of projects, both public and private, has attested to its usefulness as a management tool. The technique provides a number of positive benefits to the project analyst:

1. It forces the analyst to develop a detailed outline of the project which might otherwise be done poorly or not at all. Through its use, areas of the project which require remedial action can be detected, and the effect of trade-offs among time, resources, and performance can be determined.

2. The technique requires the construction of a network diagram, where each project event is depicted and its relationship to all

others is expressed. The development of such a diagram provides a standardized procedure whereby the risk of overlooking essential project components is minimized.

3. The technique makes it possible to organize existing data into a more meaningful form for immediate managerial action. PERT distinguishes between those critical activities on which loss of time must be avoided or on which extra effort and expense is justified and those activities where latitude exists with respect to completion time. Such information allows project administrators to manage by exception, thus avoiding the use of time and thought on components which are non-essential to project completion.

4. The technique allows project management to simulate the effects of alternative decisions under consideration and to study their effects upon project deadlines prior to implementation.

5. The technique is such that the larger and more complex the project, the greater will be the benefits derived from its use.

6. The technique provides valuable information which assists management in conducting further project evaluation. By defining when the various activities and events occur in time, the technique pinpoints when the project's costs and benefits will occur. This information becomes extremely important when a cost-benefit analysis is to be carried out by the project administrative staff.

The following manual is broken down into two components. The first explains the PERT technique, with specific reference to the construction of the all-important network diagram; provides hints on how to solicit reliable time estimates for project activities; and presents the techniques used in calculating internal time estimates necessary in

determining a project's critical path. The second section sets forth a step-by-step procedure for using the computer program CRIT to carry out calculations explained in section one.

Both sections have been written for the reader with little or no prior knowledge of either PERT or computer techniques. A simplified example dealing with the steps needed in setting up an administrative unit for a crop breeding project is used throughout the manual to highlight the individual calculations needed. The example has been extracted from an ongoing crop breeding program presently being conducted through the cooperative efforts of the Korean Ministry of Agriculture and Forestry and the U.S. Agency for International Development.

To acquaint the reader with the example which is only one of a number of units initiated to carryout the project, a brief explanation is necessary.

Based on research conducted by the Korean Agricultural Sector Simulation Project and Michigan State University, the Republic of Korea (ROK) and the U.S. Agency for International Development (USAID) in 1973, successfully negotiated a five million dollar bilateral loan agreement. The purpose of the loan is to assist in the breeding of new and improved varieties of major commercial crops being grown in Korea and to develop new techniques and machinery to be used in cultivating and processing these new varieties. The agreement listed a number of specific areas of interest; the improvement of existing strains of rice, soybeans, wheat, barley, potatoes and forage crops so that they will be more productive, less susceptable to disease and faster maturing; the development of new or modified machinery suitable for the production and processing of the new varieties; and the

development of multiple cropping techniques which while taking advantage of the specific characteristics of the new varieties and machinery would propagate modern concepts of land use and conservation. The incorporation of these goals into a manageable research design was accomplished by subdividing the project into a number of research units. These included rice, soybean, wheat-barley, potatoe and multiple cropping research teams, a machinery development unit, a seed foundation and extention component and an administrative unit. The administrative unit used throughout the manual is a simplified version initiated to oversee and coordinate the activities of the various project units listed above.[1/]

[1/] A complete description of the project can be found in "Korean-Aid Crop Improvement Loan Project," published by the Ministry of Agriculture and Forestry, Seoul, Korea, in August of 1973. A critical path analysis of the project was completed in September of 1974. Copies of the analysis entitled "PERT--Analysis--Korean Crop Breeding Project," can be obtained from the Korean Agricultural Sector Simulation Study Team, Department of Agricultural Economics, Michigan State University.

Network Concepts and Techniques

The Definition of Project Goals and Objectives

The first step taken by the analyst in developing a network diagram is the designation of project goals and objectives. Precision here in articulating these goals is extremely important for two reasons. First, failure to account for all of the goals in developing the diagram will render the completed diagram worthless and invalidate the results of the analysis. Second, the more precise an analyst can be in articulating these goals early in the analysis the easier it will be to specify project events and activities at a later date. If we examine our simplified example, we find that the major goal is to set up a functioning administrative unit. Further refinement of this goal is accomplished by listing the specific functions which the unit would be required to accomplish. For example, the unit would be expected to (1) select and hire the appropriate staff for both the administrative unit and the necessary research teams (i.e., it is assumed that the actual field research would be done by a number of teams, each possibly devoted to the development of a specific crop), (2) coordinate the project both internally with respect to the research teams and externally with respect to the efforts of complementary agencies, and (3) generate an administrative unit capable of guiding and evaluating the overall scope of the project.

The Breakdown of Project Goals into Events and Activities

Having completed a listing of project goals, the analyst is ready to break down each goal into its component activities and events. An activity is defined as a time-consuming operation, such as "the hiring

of a project director" or "the selecting of a project staff." An event, on the other hand, is an instantaneous point in time representing the completion of one activity and the readiness to begin a new one. Each event in the network, with the exception of the first and last, must be preceded and followed by at least one other event. If, for example, the analyst were to take the functions outlined above which were required of the administrative unit and break them down into their component activities, a list such as that presented in Table I might be generated.

Table I. A Breakdown of Activities Necessary to Accomplish the Stated Functions of the Administrative Unit

Goal		Activity	Predessor Activity (ies)	Successor Activity (ies)
1	A.	Selection of a Project Director	---	B
1	B.	Selection of an Administrative Officer	A	C, D, E, G
2	C.	Organization of a Project Steering Committee	B	(Dummy)[1/]
& 3	D.	Organization of the Project Administration and Hiring of Office Staff	B	G
1	E.	Recruitment of Research Team Leaders	B	F
2	F.	Formation of a Research Steering Committee	E	H
1	G.	Selection of the Project Research Staff	B, D	H
1 & 3	H.	Designation of Research Teams	G, F	---

[1/] Dummy activities will be discussed below.

An astute reader will notice that each of the activities in Table I has been placed in sequential order, starting with the first, to occur in time, and proceeding to the last. This step is important, since it facilitates the physical construction of the network diagram. A further aid in the construction of the diagram is the designation of predecessor and successor activities. Such activities are those which immediately precede and follow the activity under examination. For example, the designation of research teams (activity H) cannot occur before the selection and hiring of the research staff nor before the designation of a research steering committee (activities G and F). However, since it is the last activity in the sequence, it has no successor activity, as indicated by the blank space in the column "Successor Activity (ies)."

Soliciting Time Estimates

After breaking down the project into component events, the analyst should arrange the events into general groups corresponding to the areas for which time estimates will be solicited. For example, if the administrative unit were being initiated to oversee the activities of a number of research teams, each devoted to the development of a specific crop, groupings would correspond to the events associated with each of the research teams and those associated with the administrative unit itself. Time estimates would then be solicited from experts having knowledge of the structure and time requirements for each group. That is, time estimates would be solicited from a specialist having first-hand knowledge of the organizational and time requirements needed to set up an administrative unit and from specialists having knowledge concerning the development of each specific crop.

By subdividing the total project into components, the analyst is providing a recognizable frame of reference for each of the specialists consulted. Each specialist, when interviewed, should be asked to provide the following information:

(1) to check over the list of activities generated by the analyst and to add or delete any which he feels are not appropriate,

(2) to arrange the resulting list of activities in sequential order, and

(3) to provide estimates of the three completion times required for each activity to run the analysis.

The analyst may find some difficulty in soliciting time estimates from experts where the project contains activities which have rather diverse time estimates. Experts tend to be hesitant in providing specific time estimates for activities which have highly divergent completion times. For example, a specialist might be hard-pressed to provide estimates for activities such as breeding of a new crop variety, which might take anywhere from one to seven years. In such cases the specialist should be assured that the estimates are at best educated guesses.

Once the list of activities, their sequence, and their appropriate time estimates have been collected by the analyst, he is ready to begin constructing the network diagram. The procedures for undertaking this step in the analysis are outlined below.

The Construction of the Network Diagram

The transformation of the information in Table I to a netowrk diagram is done through the use of an arrow diagram. Such a diagram is a

pictorial representation of the activities and events which take place in a project. Events are depicted by blocks or circles and are connected by arrows which represent the activities necessary to achieve the events. Arrows move in the direction of time flow, with the head of the arrow attached to those events which immediately follow the activity and the tail of the arrow attached to those events which immediately precede the activity. For example, if activity G were diagramed it should have the following arrangement:

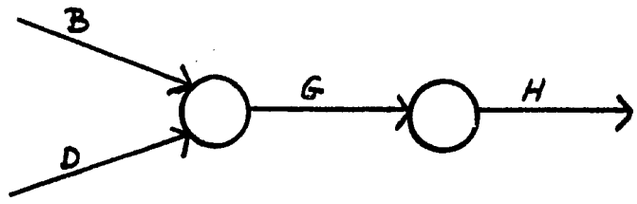

The continuation of this process for all activities in the project generates a network diagram. There are a few rules which should be observed when constructing the diagram:

1. All activities entering a node must have identical successors.

2. All activities leaving the node must have identical predecessors

3. A node must describe the complete relationships between entering and leaving activities.

4. Each activity must be uniquely defined by at least two separate nodes.

5. No activity can start till all preceding activities have been completed.

6. All events, or nodes, except the first and the last, must have at least one activity entering and one activity leaving them.

If the activities in Table I were transformed using the rules and the procedures outlined above, they would look like the following diagram.

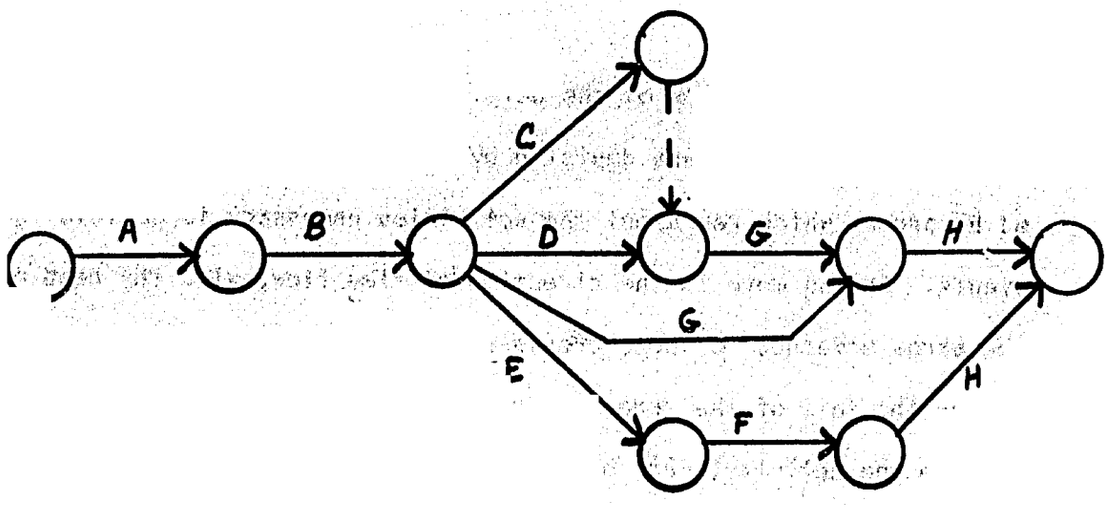

The next step in preparing a completed network diagram is to number the event nodes. This is done using the following rule: nodes are numbered in such a way that a lower number never has to be preceded by a higher number. This rule, when applied to our example of an administrative unit, generates the following network of activities and events:

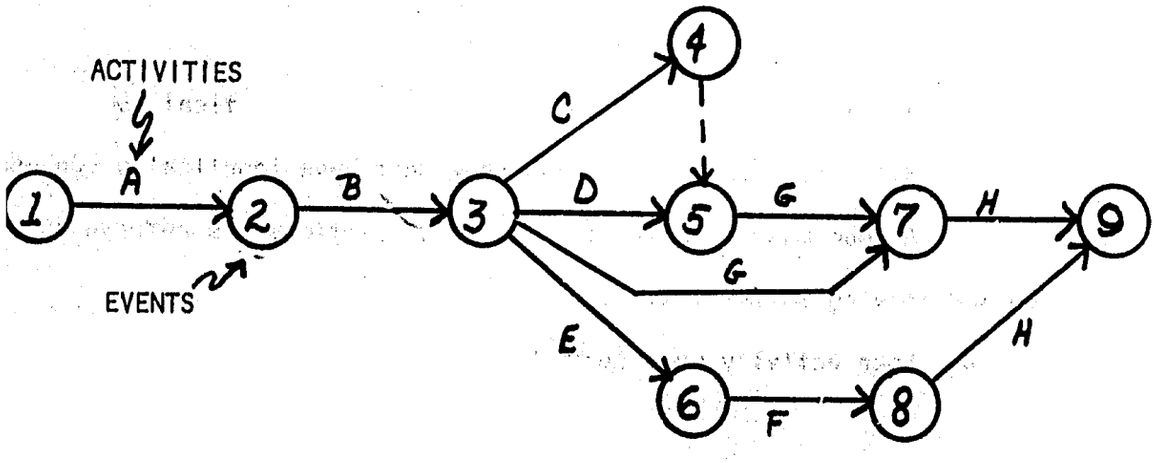

When examining the network, the reader will notice that the line which connects events 4 and 5 is, unlike the others, a dotted line. This indicates that the activity which connects the events is a dummy activity. Before proceeding, some explanation concerning the use of dummy activities is necessary.

The Definition and Use of Dummy Activities

In order to give unique designation to each activity and each node, it is often necessary to resort to the use of dummy activities. A dummy activity is so named because it requires neither time nor money. The true value of it is that it shows that an activity cannot start until a certain event occurs, even though the two are not directly related. An example of its usefulness can be seen if we imagine two activities, C and D, each having the same predecessor and successor events and each being carried out simultaneously. It might be logical to include them in the network diagram like this:

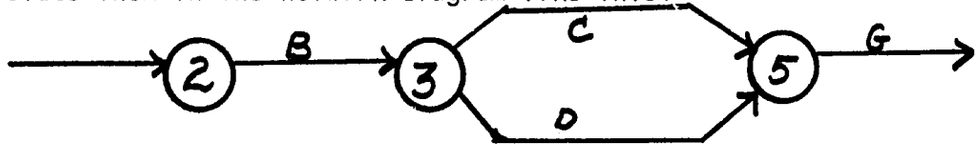

But the above form is wrong because it violates the rule that each activity must be uniquely defined by two nodes. In order to comply with this rule, the diagram would be reconstructed to look something like this:

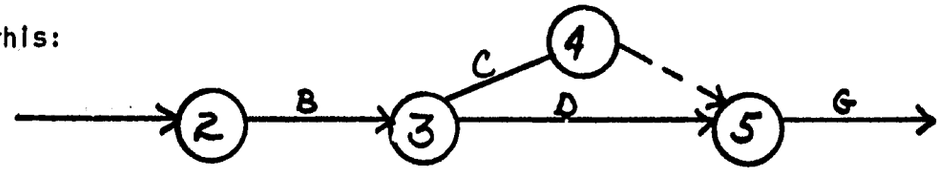

Another use of the dummy would be the case in which activity C is dependent upon the completion of the two activities, A and B; and activity D is dependent only upon the completion of B. Such a situation would give rise to a diagram such as:

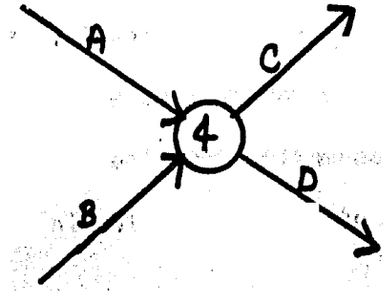

Such a representation is in error, however, since it depicts activity D as dependent on both activities B and C. The correct way of presenting the relationship requires the use of a dummy activity and would look something like this:

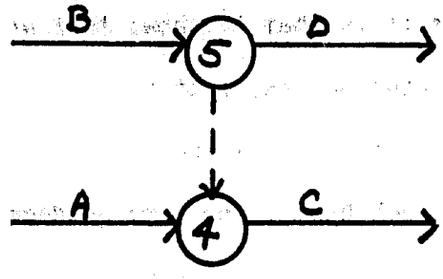

Time Estimates

The nature of large-scale, one-time projects, especially research and development projects, makes time estimates of activities highly uncertain. In order to account for this uncertainty, the PERT technique assumes that its activity time estimates are probability distributions. In so doing it assumes the critical path to be a probabilistic critical path, with the schedules for all of the activities in the network reflecting the uncertainty of each activity time. By obtaining three estimates of the time needed to complete each activity, the time to accomplish any given task in the network is expressed in terms of likelihood rather than positive assurance. Likelihood, in turn, can be expressed in terms of statistical probability and distribution curves. The three different time estimates sought by the analyst are:

1. The optimistic time, designated T_o, is the shortest possible time in which the activity may be completed if all goes well. The estimate is based on the assumption that the activity would have no more than one chance in 100 of being completed in less than this time.

2. The most likely time, designated T_l, is the time estimate that would be made if only one were required. It is also the time that would occur most often if the activity were repeated under exactly the same conditions many times; or it is the one that would be given most often if many qualified people were asked.

3. The pessimistic time, designated T_p, is the longest time that an activity would take under adverse conditions. This time estimate is based on the assumption that it would not be exceeded any more than once in a hundred occasions.

The three time estimates should be based on calendar time (days, weeks, or months, including holidays) rather than upon work days. Once collected they should not be changed unless there is a corresponding change in work content, resource availability, or more knowledge, which would improve estimates or alter the network.

PERT Computations

Using these three time estimates, the PERT technique follows a number of computational steps which generate the numerical parameters used in determining the critical path. Four basic steps are required.

First is the calculation of estimated mean times for each activity in the network. The computational algorithm used in determining this mean time (T_e) reduces the three time estimates into a single weighted average estimate, the mean of a beta distribution. Graphically the distribution and associated time estimates would resemble that present in Figure 1.

As with all such presentation, a number of fundamental assumptions accompany its use. By assuming a beta distribution when determining

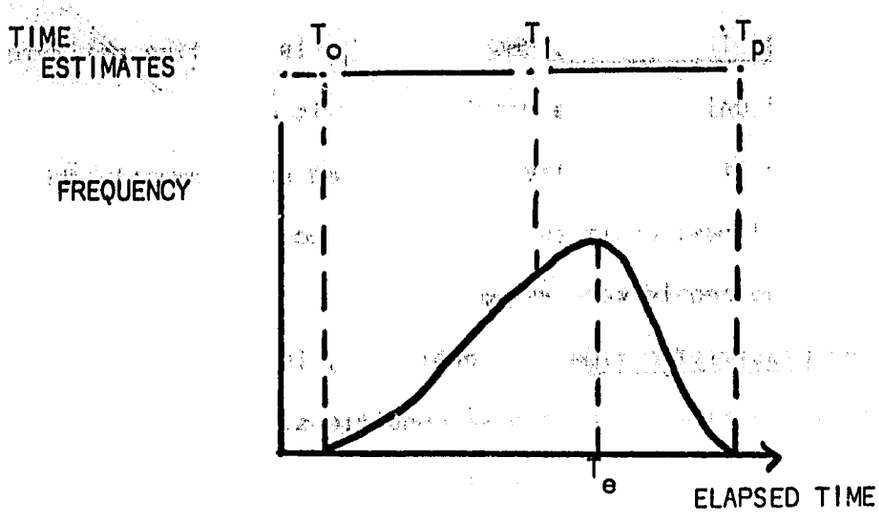

Figure 1. Theoretical Frequency Distribution of Activity Performance Times

expected mean times, the analyst assumes that if the activity were repeated a large number of times, the resulting completion times would be normally distributed. Such distribution would have only one peak, with the times associated with the pessimistic or optimistic estimates having little chance of being realized (1 in 100). These assumptions collectively form the basis of the computational algorithm used to determine the expected mean time for an activity. This algorithm takes the form:

$$T_e = \frac{T_o + 4T_l + T_p}{6}$$

The assumptions associated with the acceptance of a beta distribution and the low probability given to the realization of pessimistic and optimistic time estimates is built into the formula by the selection of weights used to combine T_o, T_l, and T_p. The parameter T_e, which is generated by the algorithm, is interpreted as the time period within which there is a 50% chance of completing a given activity. Time estimates associated with our example in weeks are presented in Table 2 below.

Table 2. Time Estimates (in Weeks) Used in Computing the Critical Path for the Korean Project

Activity	Preceding Event	Succeeding Event	T_o	T_l	T_p	T_e
Selection of Project Director	1	2	3	7	10	6.8
Selection of Administrative Officer	2	3	2	3	6	3.3
Organization of Project Steering Committee	3	4	1	3	5	3.0
Organization of Administrative Unit	3	5	1	2	3	2.0
Recruitment of Research Team Leaders	3	6	3	7	10	6.8
Selection of Project Research Staff	3	7	4	9	15	9.2
Dummy Activity	4	5	0	0	0	0.0
Selection of Project Research Staff	5	7	4	9	15	9.2
Formation of Research Steering Committee	6	8	1	3	5	3.0
Designation of Research Teams	7	9	1	2	3	2.0
Designation of Research Teams	8	9	1	2	3	2.0

The values for T_p, T_l, T_o, and T_e are added to the network diagram, as illustrated below.

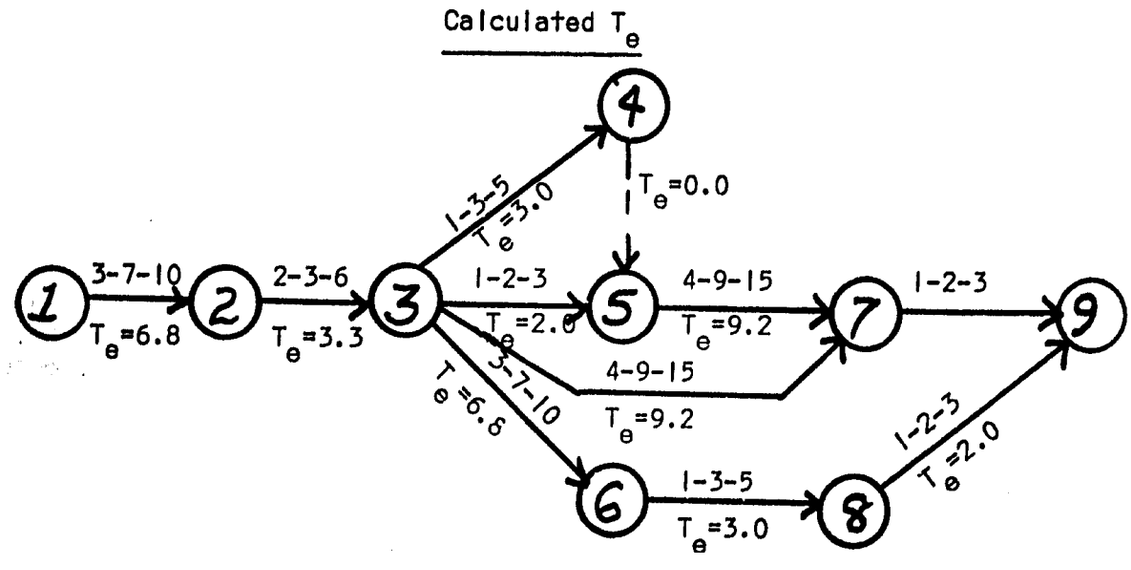

The second step in determining the critical path is the calculation of an expected time, or T_E, for each event in the network. T_E represents the expected time of completion of an event measured from the beginning of the project. It is calculated by accumulating the T_e's for the activities preceding the event. Sums of the mean times are calculated for all possible paths leading to the event, with the largest being selected as the expected time for the given event. The results of these calculations are presented below.

Calculated T_E

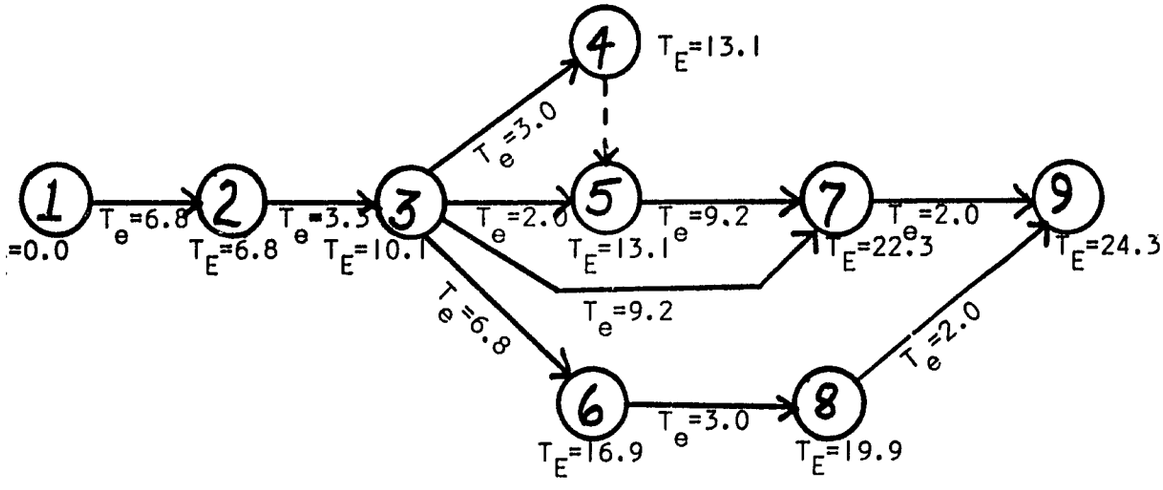

The T_e for connecting events 1 and 2 is 6.8 weeks. Since the T_E for event 1 is zero (i.e., it is the first event in the project) the T_E for event 2 is 6.8 weeks. Similarly, the T_e for the activity bounded by events 2 and 3 is 3.3 weeks. This added to 6.8 (the T_E for event 2), gives 10.1 weeks (the T_E for event 3.)

If an event has more than one activity path leading to it, the T_E for each separate path is calculated and the largest T_E is selected to represent the event. For example, event 5 has two activity paths which lead to it, one through events 3 and 4 and one directly from 3.

If we add up the T_e for the first path, we have 10.1 (the T_E for event 3) plus 3.0 (the T_e for the activity connecting events 3 and 4) plus 0.0 (the T_e for the dummy activity), which equal a T_E for event 5 of 12.1. Since the T_E attributed to the first path exceeds that of the second, it is assigned to event 5. From the figure it is evident that the completion of the project will take 24.3 weeks (the T_E of event 9).

The third step in the computations is the determination of the latest allowable time, or T_L, for each event in the network. The T_L for a given event is that point in time after which occurrence of the event (i.e. completion of associated activities) will cause delays in the T_E of successor events and an extension of the project. It is the latest allowable completion date for preceding activities and the latest allowable starting date for the most critical succeeding activities.

The T_L for a given event is calculated by the mirror of the procedure used to calculate the T_E. The analyst begins at the last event in the network where the T_L is equal to the T_E. He then moves along the various paths between a given event and the object event, subtracting the activity mean times from the succeeding event's latest allowable time. If more than one path leads into an event, the smallest T_L obtained from each of the paths is chosen. For example, to determine the various T_L's in the administrative system, the T_L for event 9 is set to equal its T_E, 24.3. To determine the T_L for event 7, the T_e for the activity connecting events 7 and 9, 2.0, is subtracted from the T_L for event 9. This results in a T_L for event 7 equal to 22.3.

The calculation of a T_L for event 3 is complicated by the fact that there are four possible paths leading to the event. Each will give its own corresponding T_L for event 3. The T_e of the activity which connects

events 3 and 4 is 3.0. This subtracted from 13.1 (the T_L for event 4) gives 10.1. The T_e for the activity connecting events 3 and 5 is 2.0. This subtracted from 13.1 (the T_L for event 5) gives 11.1. Similar linkages exist between events 3 and 6 and events 3 and 7. The use of the above procedure results in the calculation of two new T_L's for event 3 corresponding to each of these paths. The T_L for the path connecting events 3 and 6 is 12.5, while that for the path connecting events 3 and 7 is 13.1. The T_L for event 3, which is the smallest of these four figures, is 10.1. T_L's for each event in the network are presented below:

Calculated T_L

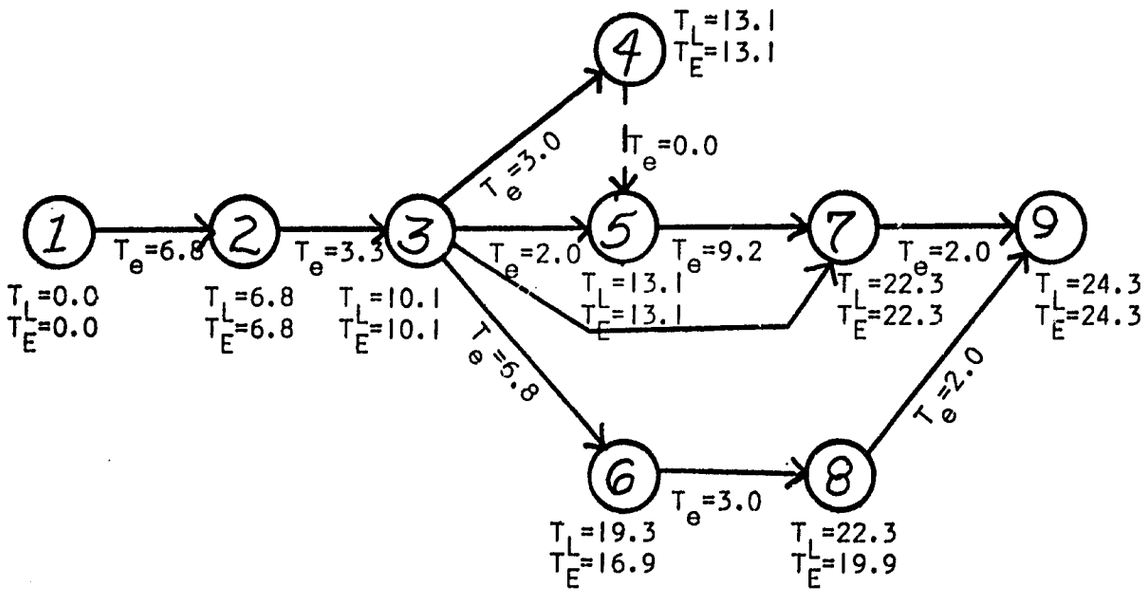

The development of estimates of expected and latest allowable times for each activity allows the analyst to proceed to the fourth step in the calculations, the development of slack time estimates, or T_s, for each event. Slack time is easily determined by subtracting the mean expected time estimate from the latest allowable time estimate for each activity. An examination of the preceding network diagram above indicates

that there is no slack for events 1, 2, 3, 4, 5, 7, and 9. Events such as these, which are characterized by zero slack, are called critical events, since any delay in activities between them could result in an increase in the expected completion time for the whole project. Events 6 and 9 both have slack time associated with them of 2.3 weeks. This indicates that the completion of the activities connecting both of these events could be postponed up to 2.3 weeks without delaying the completion of the project.

A large amount of positive slack associated with an activity indicates the possibility of resource reallocation. As slack time approaches zero for any activity, the likelihood of that activity becoming a potential trouble spot increases. Where both conditions appear in the same project, trade-offs of resources between activities of high slack to those of low slack are advisable. In our administrative example, resources devoted to activities connecting events 3 and 6 and events 6 and 8 could be reallocated to activities connecting events 3 and 5, 5 and 7, or 7 and 9.

Calculating the Critical Path

The preceding four computations are instrumental in the determination of the critical path. As indicated above, the amount of slack associated with an activity determines its degree of criticalness. By grouping activities according to their amount of slack, several paths can be defined through a given project, each with a varying degree of criticalness. Criticalness in this context is measured in terms of negative, zero, or positive slack. Positive slack indicates an ahead-of-schedule condition, while negative slack indicates a behind-schedule condition and

zero slack indicates an on-schedule condition with a probability of .5. Negative slack occurs when the total activity mean time along a path is greater than the time available to meet project requirements. Such a situation may occur when project completion dates are defined exogenously or when the T_E's are updated during the project to reflect actual delays and their effect on future event completion times.

The path which has the least slack of those associated with a project is considered the critical path. By construction it is the path in the network which requires the greatest amount of time to complete. It is found by totaling the slack times associated with all possible paths through a network and selecting the path which has zero slack. Using such procedures, it is possible to encounter projects that will have multiple critical paths. Designation of an event to the critical path indicates that failure to accomplish the event by its expected completion date will mean a delay in the completion of the project by an equal amount of time.

Using our example, four possible paths are discernable. These are: the path which runs through events 1, 2, 3, 4, 5, 7, 9; the path

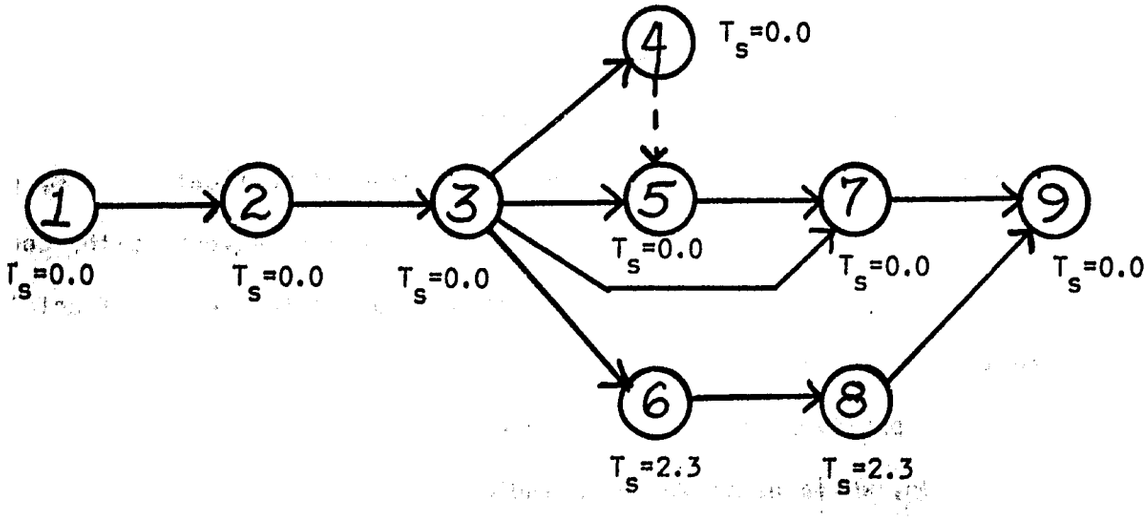

through events 1, 2, 3, 5, 7, 9; the third path through events 1, 2, 3, 7, 9; and the fourth through 1, 2, 3, 6, 8, 9. The slack for paths one through four is respectively 0.0, 0.0, 0.0, 4.9. Choosing the path or paths having zero slack indicates that the critical path for the Korean project falls along a line which encompasses events 1, 2, 3, 4, 5, 7, and 9. Delay in the completion of activities which connect these critical events will cause a delay in the completion of the project itself.

Computer Programs for PERT Analysis

The procedures outlined in the preceding examples become increasingly tedious as the project network becomes larger and larger. However, the greater the degree of project complexity the more valuable the role PERT can play in project management. To take advantage of the benefits which PERT has to offer and to avoid the computational costs which result from its use, a number of computer programs using the PERT algorithm have been devised. Prior to using the programs outlined below the project analyst must develop a listing of project activities using the methods presented on pages five through seven, list the activity in sequential order using the six rules presented on page 9 and solicit optimistic, likely and pessimistic times estimates for each activity. The following programs have been designed to accept this information, to proceed through the four computational steps presented above, to determine the critical path of a given project, and to generate a calendar which is used to provide dates for each of the project events and activities.

The programs, CRIT and CRITCALENDAR, are designed to determine the critical path of a given project and to generate a calendar which can be used to provide dates for each of the project activities. The programs will be presented in order of their use: the Critical Path Calendar program (CRITCALENDAR) first, followed by the Critical Path Analysis program (CRIT).

The Critical Path Calendar (CRITCALENDAR)

CRITCALENDAR is designed to generate a calendar ranging from one to twenty-four years in length. The calendar is stored on a disk storage unit and is called each time the Critical Path program is run. Each unit in the calendar contains numbers specifying a given day, month, and year and a cumulative index number representing the number of work days from the beginning of the project to the date stored in the calendar unit. The index is generated by adding up all the days from the beginning of the project to the date in question, and then excluding non-working days, such as Sundays and holidays.

Input Data for CRITCALENDAR

Three types of data are required to activate the CRITCALENDAR routine. These are: (1) the dates on which the calendar is to begin and its length, (2) the dates of holidays which will occur in the calendar, and (3) the days which are to be considered as non-work days. Input data needed to set up the calendar for the administrative unit example appears in Appendix I. These parameters are inputted into the program in the following manner:

DATA CARD 1	STARTING DATES AND LENGTH OF CALENDAR
COLUMN	CONTENTS
5-9	The first day of the project. This may be any integer from 1 to 31. There are two restrictions on the choice of starting days. First, it must be a valid day in the month; for example, you cannot specify 31 if the project is to begin in February, since the month has only 28 days; and, second, the day must be the first day of the work week. That is, if the work week runs from Monday to Friday, then the number entered for the day must be a Monday.
10-14	The first month of the project. This may be any integer from 1 to 12.
15-19	The first year of the project. This may be any integer, such as 1973, 1980, etc.
20-24	This number indicates the length of the calendar. It may be any integer from 1 to 24 and must be estimated by the analyst. If the estimate is too small, the program will abort prematurely, with an error message specifying that the calendar length is too short. To increase the calendar length, increase the value in columns 20 through 24.

DATA CARDS 2 to N+1	DATES TO BE SPECIFIED AS HOLIDAYS (N = Number of Holiday Data Cards)
COLUMN	CONTENTS
-5	The day of the holiday. This may be any integer from 1 to 31.
6-10	The month of the holiday. This may be any integer from 1 to 12.
11-15	The year of the holiday. If the holiday recurs on the same day each year, such as Christmas, then a-100 is entered. This will automatically specify the day and month for each year that the calendar is generated as a holiday. If the holiday is non-recurring, such as Thanksgiving, individual cards containing the day, month, and year must be prepared. The program is designed to accept up to 150 individual holiday cards.

NOTE: Data cards for each holiday should be prepared and arranged in sequential order. It is important to insert a blank card immediately after the last holiday data card. Failure to do so will result in a premature abortion of the program, with the error message "END OF FILE ENCOUNTERED."

DATA CARD N+2 DESIGNATION OF NON-WORKDAYS

COLUMN	CONTENTS
1-3	If the seventh day of the workweek is a non-workday, place a 1 in column 3 and 0's in columns 6 and 9. For example, if the workweek begins on a Monday and Sunday is to be considered a non-workday, enter 1 in column 3.
4-6	If the sixth day of the workweek is a non-workday, place a 1 in column 6. If both Saturday and Sunday are non-work days, a 1 should be placed in columns 3 and 6 and a zero in column 9.
7-9	If the fifth day of the workweek is a non-workday, a 1 is entered in column 9.

NOTE: Any combination of non-workdays can be specified. For example, Friday and Sunday may be specified by placing 1's in columns 3 and 9, with a zero in column 6.

The Critical Path Program (CRIT)

CRIT is designed to generate estimates of slack time for each event in a given project, to divide and print events into activities with high and low slack times, to determine the events on the critical path, and to equate various event starting and completion times with actual calendar dates. The input data needed to analyze the administrative unit project appears in Appendix I. The program is designed to accept input data in the form of weeks or days. If new events are added to the project, the program will accept the new events, incorporate them into the calculations, and generate a new data deck containing the changes. This up-date feature alleviates the need for the analyst to renumber all the events in the original data deck before running the new version. The

program has been designed to accept projects which contain up to 250 events, with a maximum of 600 connecting activities.

Input Data for CRIT

Four types of input information are required to activate CRIT. These include: (1) parameters specifying the type of data inputted; that is, days or weeks; (2) the parameter separating events of high and low float times; (3) data describing each activity in the project; and (4) data which activate the UPDATE subroutine, if needed. Input data should be presented in the following manner:

DATA CARD 1	SYSTEM PARAMETERS
COLUMN	CONTENTS
5	If time estimates are in days, 0 is entered. If in weeks, a 1 is entered.
9-10	This is a decision parameter which separates events with high and low slack. For example, if the time estimates are in days and 20 is entered in columns 9 and 10, then every event with slack less than 20 days will be considered as having minimum slack, while events equal to or greater than 20 days will be considered as having maximum slack. The value of the variable must be estimated by the analyst.

DATA CARD 2	PROJECT TITLE CARD
COLUMN	CONTENTS
1-70	The title of the project from one up to seventy characters in length. This may include such items as the project name, date of the run, the analyst's name, and so on.

DATA CARDS 3 to M+2	ACTIVITY DESCRIPTION AND TIME ESTIMATES (M = Number of Project Activities)
COLUMN	CONTENTS
1-3	The number of the event preceding the activity being described. This may be an integer from 1 to 249.

4-6	The number of the event following the activity being described. This may be an integer from 2 to 249.
7-13	The most optimistic time estimate (T_o). This may be any integer from 1 to 1,000 and must be entered as a two-place decimal; i.e., 1.00.
14-21	The most likely time estimate (T_1). This may be an integer from 1 to 1,000 and must be entered as a two-place decimal.
22-27	The most pessimistic time estimate (T_p). This may be any integer from 1 to 1,000 and must be entered as a two-place decimal.
30-78	The description of the activity. For easy recognition, the activity names should be similar to the event names which they are describing.

NOTE: Data cards must be made up for each of the activities in the network. They should be arranged in sequential order. It is <u>important</u> to insert a blank card following the last activity data card. Failure to do so will result in a premature abortion of the program, with the error message, "END OF FILE ENCOUNTERED."

Input Data for the UPDATE Subroutine

As previously mentioned the CRIT program contains a feature which allows the analyst to break down the existing network into more detailed components. The data cards which activate this subroutine fall into categories: those that describe the new activities and those which set the parameters for the subroutine. In the process of breaking down the network, the analyst is actually subdividing existing activities into two or more components. Data cards describing these new activities are placed in the original data deck immediately following the activity which is being subdivided. The data cards describing the system parameters which activate the subroutine are placed after the original data deck.

The subroutine is designed to accept up to twenty changes at any one time. Input data for the subroutine should be prepared in the following manner:

DATA CARDS 1 to M

NEW ACTIVITY DESCRIPTIONS AND TIME ESTIMATES (M = number of new project activities)

Data cards describing the new activities are prepared following the same form used in preparing the original activity description data cards. A card is prepared for each new activity and placed in the original data deck following the activity being subdivided.

DATA CARD M+1

THE NUMBER OF NEW ACTIVITIES

COLUMN	CONTENTS
6-7	This parameter sets the number of new activities which are being added to the network. The parameter may take on any integer value from 1 to 20.

DATA CARD M+2

LOCATION OF NEW ACTIVITIES

COLUMN	CONTENTS
5-7	This is the number of the activity at which the first change will occur. The number is taken from the first column of Table 1, generated by the last run of the program. If, for example, the new activity falls between activities 7 and 8, the integer 7 is entered.
8-10	This is the number of the activity at which the second change will occur.
11-13, etc.	The remainder of the data card is broken up into three-space fields to accommodate the remaining changes. If there are no additional changes, the fields should be left blank. The number of fields used should correspond with the number of new activity description cards entered on card 2.

DATA CARDS M+3 THROUGH K+3

NEW SUCCESSOR EVENT NUMBERS (K = Number of New Successor Event Numbers)

COLUMN	CONTENTS
2-4	This is the new successor event number for the first new activity. This is the event number following the new activity. One successor event is allowed per card up to 20 cards. The entry may be any integer from 2 to 250. If more than one successor event is entered (i.e., more than one new activity), the cards must be in sequential order.

The Control Cards and Data Deck Structure for CRITCALENDAR and CRIT

A number of different runs may be required to complete the analysis of a given project. If there are no errors in the input data and the calendar length is sufficient, only one run will be necessary. This initial run will both generate the calendar and perform the anlaysis of the data. The control cards and deck structure are those used for the Michigan State University computer instillation as of the date of this publication. They are as follows:

```
PNC CARD
YOUR NAME, CM 120000, RG2, T150, JC950, MT1.
PW =
APLIB, TT4040, *MEHCLB1, *MEHCRB1.
CATALØG, MEHCLB1, DATING.
CATALØG, MEHCRB1, CRIT.
MEHCLB1.
CATALØG, TAPE 1, CRITCALENDAR.
REWIND, TAPE 1.
MEHCRB1.
7
8
9
The data deck for the calendar
7
8
9
The data deck for the critical path program
6
7
8
9
```

Two errors may occur on this initial run. If an error is made when typing the time estimates on the activity data cards, an error message specifying the input card where the error occurred will appear in the output. If this occurs, correct the error and re-enter the data deck using the following control cards:

```
PNC
YOUR NAME, CM120000, RG2, T150, JC950.
PW =
ATTACH, TAPE 1, CRITCALENDAR.
```

```
ATTACH, MEHCRBI, CRIT.
MEHCRIT.
7
8
9
Corrected data deck for the critical path program
6
7
8
9
```

If the calendar length is too short to accommodate the project, an additional message may occur specifying that the calendar field length is too small. In this case the analyst will have to increase the size of the variable entered in columns 20 through 24 on data card I in the calendar data deck. The analyst should make sure that any additional holiday cards for non-recurring holidays are incorporated into the data deck at this time. The program will automatically include the additional recurring holidays and additional non-workdays. Once these corrections have been made, the new data deck may be rerun using the following control cards:

```
PNC
YOUR NAME, CM110000, RG2, T150, JC950.
PW =
ATTACH, TAPE 1, CRITCALENDAR.
ATTACH, MEHCLBI, DATING.
ATTACH, MEHCRBI, CRIT.
PURGE, TAPE 1.
RETURN, TAPE 1.
MEHCLBI.
CATALØG, TAPE 1, CRITCALENDAR.
REWIND, TAPE 1.
MEHCRBI.
7
8
9
The corrected calendar data deck
7
8
9
The original critical path data deck
6
7
8
9
```

If for any reason additional runs are required of a program that has run correctly--such as enlarging the number of activities in the project--the following control cards and deck structure will be required:

```
PNC
YOUR NAME, CM11000, RG2, T150, JC950.
PW =
ATTACH, TAPE 1, CRITCALENDAR.
ATTACH, MEHCRB1, CRIT.
MEHCRB1
7
8
9
The data for the calendar
7
8
9
The corrected data deck for the critical path program,
including the new activity data cards and the appropriate
data cards for the up-dated subroutine.
6
7
8
9
```

Output from the Critical Path Program

The critical path program generates five tables. Examples of each appear in Appendix 2. Table 1 presents the number of each activity, activity predecessor and successor events, the original time estimates and activity description, and the calculated expected time for each activity. Table 2 lists the project's events, the slack time for each event, and the earliest and latest completion dates for each event. The date associated with the largest value appearing in the column labeled "Latest Time": is the date the project will be completed. Tables 3 and 4 list the events with respect to minimum and maximum float times. These tables are useful in determining how resources used in activities with high float times can be reallocated to activities with little or no float time. Table 5 lists all activities in the project, with their respective earliest and latest completion dates. In addition, activities having a

CP designation at the far right of the table are those which are on the critical path. The date associated with the last of these activities is the completion date of the project.

APPENDIX I

INPUT FORMAT FOR CRITCALENDAR AND CRIT

PROGRAM: CRITCALENDAR

	COLUMN 5-9	COLUMN 10-14	COLUMN 15-19	COLUMN 20-24
CARD 1	7	1	1974	

	COLUMN 1-5	COLUMN 6-10	COLUMN 11-15
CARD 2	1	3	-100
CARD 3	5	4	-100
CARD 4	6	6	-100
CARD 5	17	7	-100
CARD 6	15	8	-100
CARD 7	20	9	-100
CARD 8	3	10	-100
CARD 9	9	10	-100
CARD 10	24	10	-100
CARD 11	25	12	-100

	COLUMN 1-72
CARD 12	BLANK

	COLUMN 1-3	COLUMN 4-6	COLUMN 7-9
CARD 13			0

PROGRAM: CRIT

	COLUMN 5	COLUMN 9-10
CARD 1	0	20

CARD 2 ADMINISTRATIVE PROJECT--EXAMPL

	COLUMN 1-3	COLUMN 4-6	COLUMN 7-13	COLUMN 14-21	COLUMN 22-27	COLUMN 30-78
CARD 3	1	2	3.00	7.00	10.00	SELECTION OF PROJECT DIRECTOR
CARD 4	2	3	2.00	3.00	6.00	SELECTION OF ADMINISTRATIVE OFFICER
CARD 5	3	4	1.00	3.00	5.00	ORGANIZATION OF PROJECT STEERING COMMITTEE
CARD 6	3	5	1.00	2.00	3.00	ORGANIZATION OF ADMINISTRATIVE UNIT
CARD 7	3	6	3.00	7.00	10.00	RECRUITMENT OF RESEARCH TEAM LEADERS
CARD 8	3	7	4.00	9.00	15.00	SELECTION OF PROJECT RESEARCH STAFF
CARD 9	4	5	0.00	0.00	0.00	DUMMY ACTIVITY
CARD 10	5	7	4.00	9.00	15.00	SELECTION OF PROJECT RESEARCH STAFF
CARD 11	6	8	1.00	3.00	5.00	FORMATION OF RESEARCH STEERING COMMITTEE
CARD 12	7	9	1.00	2.00	3.00	DESIGNATION OF RESEARCH TEAMS
CARD 13	8	9	1.00	2.00	3.00	DESIGNATION OF RESEARCH TEAMS

	COLUMN 1-72
CARD 14	BLANK

APPENDIX 2

TABLE ONE INPUT DATA AND EXPECTED TIMES FOR EACH ACTIVITY

NO.	ACTIVITY DISCRIPTION	PRED	SUC	TO	TL	TP	EXPECTED TIME
1	SELECTION OF PROJECT DIRECTOR	1	2	3.00	7.00	10.00	6.83
2	SELECTION OF ADMINISTRATIVE OFFICER	2	3	2.00	3.00	6.00	3.33
3	ORGANIZATION OF PROJECT STEERING COMM.	3	4	1.00	3.00	5.00	3.00
4	ORGANIZATION OF ADMINISTRATIVE UNIT	3	5	1.00	2.00	3.00	2.00
5	RECUITMENT OF RESEARCH TEAM LEADERS	3	6	3.00	7.00	10.00	6.83
6	SELECTION OF PROJECT RESEARCH STAFF	3	7	4.00	9.00	15.00	9.17
7	DUMMY ACTIVITY	4	5	.00	.00	.00	.00
8	SELECTION OF PROJECT RESEARCH STAFF	5	7	4.00	9.00	15.00	9.17
9	ORMATION OF RESEARCH STEERING COMM.	6	8	1.00	3.00	5.00	3.00
10	DESIGNATION OF RESEARCH TEAMS	7	9	1.00	2.00	3.00	2.00
11	DESIGNATION OF RESEARCH TEAMS	8	9	1.00	2.00	3.00	2.00

TABLE TWO LIST OF FLOAT TIME BY ACTIVITY

EVENT	EARLIEST TIME (IN WEEKS OR DAYS)	DATE	LATEST TIME (IN WEEKS OR DAYS)	DATE	FLOAT TIME (IN WEEKS OR DAYS)
1	.00	7- 1-1974	.00	7- 1-1974	.00
2	6.83	12- 3-1974	6.83	12- 3-1974	.00
3	10.17	15- 4-1974	10.17	15- 4-1974	.00
4	13.17	14- 5-1974	13.17	14- 5-1974	.00
5	13.17	14- 5-1974	13.17	14- 5-1974	.00
6	17.00	20- 6-1974	19.33	16- 7-1974	2.33
7	22.33	14- 8-1974	22.33	14- 8-1974	.00
8	20.00	22- 7-1974	22.33	14- 8-1974	2.33
9	24.33	4- 9-1974	24.33	4- 9-1974	.00

TABLE THREE LIST OF ACTIVITIES WITH MINIMUM FLOAT TIMES

EVENT	EARLIEST TIME (IN WEEKS OR DAYS)	DATE	LATEST TIME (IN WEEKS OR DAYS)	DATE	FLOAT TIME (IN WEEKS OR DAYS)
6	17.00	20- 6-1974	19.33	16- 7-1974	2.33
8	20.00	22- 7-1974	22.33	14- 8-1974	2.33

TABLE FOUR LIST OF ACTIVITIES WITH MAXIMUM FLOAT TIMES

EVENT	EARLIEST TIME (IN WEEKS OR DAYS)	DATE	LATEST TIME (IN WEEKS OR DAYS)	DATE	FLOAT TIME (IN WEEKS OR D
0	.00	0- 0- X	.00	0- 0- 0	.00

THERE ARE NO ACTIVITIES WITH FLOAT TIMES GRATER THAN IEDGE

TABLE FIVE LISTING OF THE ACTUAL AND MAXIMUM COMPLETION TIMES FOR EACH ACTIVITY AND THE DESIGNATION OF ACTIVITIES ON THE CRITICAL PATH

PREDECESSOR	SUCCESSOR	ACTIVITY DISCRIPTION	ACTUAL TIME (IN WEEKS OR DAYS)	DATE	MAXIMUM TIME (IN WEEKS OR DAYS)	DATE	
1	2	SELECTION OF PROJECT DIRECTOR	6.83	12- 3-1974	6.83	12- 3-1974	CP
2	3	SELECTION OF ADMINISTRATIVE OFFICER	3.33	15- 4-1974	3.33	15- 4-1974	CP
3	4	ORGANIZATION OF PROJECT STEERING COMM.	3.00	14- 5-1974	3.00	14- 5-1974	CP
3	5	ORGANIZATION OF ADMINISTRATIVE UNIT	2.00	14- 5-1974	3.00	14- 5-1974	
3	6	RECUITMENT OF RESEARCH TEAM LEADERS	6.83	20- 6-1974	9.17	16- 7-1974	
3	7	SELECTION OF PROJECT RESEARCH STAFF	9.17	14- 8-1974	12.17	14- 8-1974	
4	5	DUMMY ACTIVITY	.00	14- 5-1974	.00	14- 5-1974	CP
5	7	SELECTION OF PROJECT RESEARCH STAFF	9.17	14- 8-1974	9.17	14- 8-1974	CP
6	8	FORMATION OF RESEARCH STEERING COMM.	3.00	22- 7-1974	5.33	14- 8-1974	
7	9	DESIGNATION OF RESEARCH TEAMS	2.00	4- 9-1974	2.00	4- 9-1974	CP
8	9	DESIGNATION OF RESEARCH TEAMS	2.00	4- 9-1974	4.33	4- 9-1974	

APPENDIX 3

```
      PROGRAM DATING(INPUT,OUTPUT,TAPE60=INPUT,TAPE61=OUTPUT,TAPE1)
      DIMENSION IDATE(30,12,31),IHD(350),IHM(350),IHY(350)
      COMMON IDATE,IHD,IHM,IHY
C  PROGRAM DATING IS DESIGNED TO GENERATE A CALANDER TO BE USED
C  IN CONNECTION WITH THE CRITICAL PATH PROGRAM CRIT. THE CALANDER
C  WHEN COMPLETED IS STORED ON A PERMINENT FILE UNDER THE NAME CRIT
C  CALANDER
C
C  THE VARIABLES USED IN THE PROGRAM ARE AS FOLLOWS--
C   IDATE  = THE CALANDER ARRAY
C   IYEAR1 = THE BEGINNING YEAR OF THE CALANDER
C   IENDYR = THE ENDING YEAR OF THE CALANDER
C   ILGTH  = THE LENGTH OF THE CALANDER IN YEARS
C   IMONTH1= THE BEGINNING MONTH OF THE CALANDER
C   IDAY1  = THE BEGINNING DAY OF THE CALANDER
C   IENDAY = THE LAST DAY OF THE MONTH
C   L      = THE NUMBER OF DAYS IN THE CALANDER
C   IHOL   = FLAG DESIGNATING HOLIDAYS AND NON-WORKDAYS IN THE CALANDER
C   IDAYCNT= THE NUMBER OF WORKDAYS IN THE CALANDER
C   IHD    = THE DAY OF A HOLIDAY
C   IHM    = THE MONTH OF A HOLIDAY
C   IHY    = THE YEAR OF A HOLIDAY
C
C  ALL CALANDER DATES WHICH ARE INPUTED INTO THE PROGRAM MUST BE IN A
C  NUMERICAL DAY, MONTH, YEAR FORMAT. THE BEGINNING DATE OF THE PROJECT
C  MUST FALL ON THE FIRST DAY OF THE WORK WEEK.
C
C
C  READ PROJECT STARTING DATES AND INITIALIZE ARRAYS
C
      READ(60,1) IDAY1,IMONTH1,IYEAR1,ILGTH
    1 FORMAT(4X,4I5)
      IXDAY1=IXDAY2=IXDAY3=IXDAY4=IXDAY5=IDAY1
      IXMON1=IXMON2=IXMON3=IXMON4=IXMON5=IMONTH1
      IENDYR=IYEAR1+(ILGTH-1)
      DO 2 IY=IYEAR1,IENDYR
      I=(IY-IYEAR1)+1
      DO 3 J=IXMON1,12
      IENDAY=31
      IF(J.EQ.2) IENDAY=IENDAY-3
      IF(J.EQ.4.OR.J.EQ.6.OR.J.EQ.9.OR.J.EQ.11)IENDAY=IENDAY-1
      DO 4 K=IXDAY1,IENDAY
      IDATE(I,J,K)=0
    4 CONTINUE
      IXDAY1=1
    3 CONTINUE
      IXMON1=1
    2 CONTINUE
C
C  GENERATE DATE ARRAY
C
      L=0
      DO 5 IY=IYEAR1,IENDYR
      I=(IY-IYEAR1)+1
      DO 6 J=IXMON2,12
      IENDAY=31
      IF(J.EQ.2) IENDAY=IENDAY-3
      IF(J.EQ.4.OR.J.EQ.6.OR.J.EQ.9.OR.J.EQ.11)IENDAY=IENDAY-1
      DO 7 K=IXDAY2,IENDAY
      L=L+1
      IDATE(I,J,K)=SHIFT(K,1).OR.IDATE(I,J,K)
      IDATE(I,J,K)=SHIFT(J,6).OR.IDATE(I,J,K)
      IDATE(I,J,K)=SHIFT(IY,10).OR.IDATE(I,J,K)
      IDATE(I,J,K)=SHIFT(L,35).OR. IDATE(I,J,K)
    7 CONTINUE
      IXDAY2=1
    6 CONTINUE
      IXMON2=1
    5 CONTINUE
C
C  ADD HOLIDAYS TO THE CALANDER ARRAY
C
      DO 8 N=1,350
      READ(60,29) IHD(N),IHM(N),IHY(N)
   29 FORMAT(4X,3I5)
      I=(IHY(N)-IYEAR1)+1
      IF(IHY(N).EQ.-100) GO TO 9
      IF(IHD(N).EQ.0) GO TO 27
      IDATE(I,IHM(N),IHD(N))=IDATE(I,IHM(N),IHD(N)).OR.1
      GO TO 8
    9 DO 10 NN= IYEAR1,IENDYR
```

```
      I=(NN-IYEAR1)+1                                                   MEHCAL     83
      IDATE( I,IHM(N),IHD(N))=IDATE( I,IHM(N),IHD(N)).OR.1              MEHCAL     84
   10 CONTINUE                                                          MEHCAL     85
    8 CONTINUE                                                          MEHCAL     86
   27 CONTINUE                                                          MEHCAL     87
                                                                        MEHCAL     88
ADD WEEKEND NON-WORKDAYS TO THE CALANDER ARRAY                          MEHCAL     89
                                                                        MEHCAL     90
      READ(60,11) IDAYOF1,IDAYOF2,IDAYOF3                               MEHCAL     91
   11 FORMAT(4X,3I3)                                                    MEHCAL     92
      DO 12IY=IYEAR1,IENDYR                                             MEHCAL     93
      I=(IY-IYEAR1)+1                                                   MEHCAL     94
      DO 13 J=IXMON3,12                                                 MEHCAL     95
      IENDAY=31                                                         MEHCAL     96
      IF(J.EQ.2) IENDAY=IENDAY-3                                        MEHCAL     97
      IF(J.EQ.4.OR.J.EQ.6.OR.J.EQ.9.OR.J.EQ.11)IENDAY=IENDAY-1          MEHCAL     98
      DO 14 K=IXDAY3,IENDAY                                             MEHCAL     99
      L=SHIFT(IDATE(I,J,K),-35).AND.(.NOT.MASK(46))                     MEHCAL    100
      L1=L/7*7                                                          MEHCAL    101
      IF(L1.EQ.L) GO TO 28                                              MEHCAL    102
      GO TO 14                                                          MEHCAL    103
   28 IF(IDAYOF1.EQ.0) GO TO 15                                         MEHCAL    104
      IDATE(I,J,K)=IDATE(I,J,K).OR.1                                    MEHCAL    105
   15 IF(IDAYOF2.EQ.0) GO TO 16                                         MEHCAL    106
      IF(K.EQ.1) GO TO 35                                               MEHCAL    107
      IDATE(I,J,K-1)=IDATE(I,J,K-1).OR.1                                MEHCAL    108
      GO TO 16                                                          MEHCAL    109
   35 IF(J.EQ.1) GO TO30                                                MEHCAL    110
      J1=J-1                                                            MEHCAL    111
      IIENDAY=31                                                        MEHCAL    112
      IF(J1.EQ.2) IIENDAY=IIENDAY-3                                     MEHCAL    113
      IF(J1.EQ.4.OR.J1.EQ.6.OR.J1.EQ.9.OR.J1.EQ.11) IIENDAY=IIENDAY-1   MEHCAL    114
      IDATE(I,J1,IIENDAY)=IDATE(I,J1,IIENDAY).OR.1                      MEHCAL    115
      GO TO 16                                                          MEHCAL    116
   30 I1=I-1                                                            MEHCAL    117
      IDATE(I1,12,31)=IDATE(I1,12,31).OR.1                              MEHCAL    118
   16 IF(IDAYOF3.EQ.0) GO TO 14                                         MEHCAL    119
      IF(K.EQ.1) GO TO 31                                               MEHCAL    120
      IF(K.EQ.2) GO TO 32                                               MEHCAL    121
      IDATE(I,J,K-2)=IDATE(I,J,K-2).OR.1                                MEHCAL    122
      GO TO 14                                                          MEHCAL    123
   31 IF(J.EQ.1) GO TO 33                                               MEHCAL    124
      J1=J-1                                                            MEHCAL    125
      IIENDAY=31                                                        MEHCAL    126
      IF(J1.EQ.2) IIENDAY=IIENDAY-3                                     MEHCAL    127
      IF(J1.EQ.4.OR.J1.EQ.6.OR.J1.EQ.9.OR.J1.EQ.11) IIENDAY=IIENDAY-1   MEHCAL    128
      IDATE(I,J1,IIENDAY-1)=IDATE(I,J1,IIENDAY-1).OR.1                  MEHCAL    129
      GO TO 14                                                          MEHCAL    130
   33 I1=I-1                                                            MEHCAL    131
      IDATE(I1,12,30)=IDATE(I1,12,30).OR.1                              MEHCAL    132
   32 IF(J.EQ.1) GO TO 34                                               MEHCAL    133
      J1=J-1                                                            MEHCAL    134
      IIENDAY=31                                                        MEHCAL    135
      IF(J1.EQ.2) IIENDAY=IIENDAY-3                                     MEHCAL    136
      IF(J1.EQ.4.OR.J1.EQ.6.OR.J1.EQ.9.OR.J1.EQ.11) IIENDAY=IIENDAY-1   MEHCAL    137
      IDATE(I,J1,IIENDAY)=IDATE(I,J1,IIENDAY).OR.1                      MEHCAL    138
      GO TO 14                                                          MEHCAL    139
   34 I1=I-1                                                            MEHCAL    140
      IDATE(I1,12,31)=IDATE(I1,12,31).OR.1                              MEHCAL    141
   14 CONTINUE                                                          MEHCAL    142
      IXDAY3=1                                                          MEHCAL    143
   13 CONTINUE                                                          MEHCAL    144
      IXMON3=1                                                          MEHCAL    145
   12 CONTINUE                                                          MEHCAL    146
                                                                        MEHCAL    147
GENERATE INDEX OF WORK DAYS                                             MEHCAL    148
                                                                        MEHCAL    149
      IDAYCNT=0                                                         MEHCAL    150
      DO 17IY=IYEAR1,IENDYR                                             MEHCAL    151
      I=(IY-IYEAR1)+1                                                   MEHCAL    152
      DO 18 J=IXMON4,12                                                 MEHCAL    153
      IENDAY=31                                                         MEHCAL    154
      IF(J.EQ.2) IENDAY=IENDAY-3                                        MEHCAL    155
      IF(J.EQ.4.OR.J.EQ.6.OR.J.EQ.9.OR.J.EQ.11)IENDAY=IENDAY-1          MEHCAL    156
      DO 19 K=IXDAY4,IENDAY                                             MEHCAL    157
      IF((.NOT.(MASK(59)).AND.IDATE(I,J,K)).NE.0) GO TO 20              MEHCAL    158
      IDAYCNT=IDAYCNT+1                                                 MEHCAL    159
   20 IDATE(I,J,K)=SHIFT(IDAYCNT,21).OR.IDATE(I,J,K)                    MEHCAL    160
   19 CONTINUE                                                          MEHCAL    161
      IXDAY4=1                                                          MEHCAL    162
   18 CONTINUE                                                          MEHCAL    163
```

```
      IXMON4=1                                                          MEHCAL    164
   17 CONTINUE                                                          MEHCAL    165
C                                                                       MEHCAL    166
C     WRITE THE DAY COUNT, MONTH, AND YEAR INFORMATION IN THE           MEHCAL    167
C     CALANDER ARRAY TO TAPE 1.                                         MEHCAL    168
      DO 21IY=IYEAR1,IENDYR                                             MEHCAL    169
      I=(IY-IYEAR1)+1                                                   MEHCAL    170
      DO 22 J=IXMON5,12                                                 MEHCAL    171
      IENDAY=31                                                         MEHCAL    172
      IF(J.EQ.2) IENDAY=IENDAY-3                                        MEHCAL    173
      IF(J.EQ.4.OR.J.EQ.6.OR.J.EQ.9.OR.J.EQ.11)IENDAY=IENDAY-1          MEHCAL    174
      DO 23 K=IXDAY5,IENDAY                                             MEHCAL    175
      IDAYCNT=SHIFT(IDATE(I,J,K),-21).AND.(.NOT.MASK(46))               MEHCAL    176
      IYEAR=SHIFT(IDATE(I,J,K),-10).AND.(.NOT.MASK(49))                 MEHCAL    177
      IMONTH=SHIFT(IDATE(I,J,K),-6).AND.(.NOT.MASK(56))                 MEHCAL    178
      IDAY=SHIFT(IDATE(I,J,K),-1).AND.(.NOT.MASK(55))                   MEHCAL    179
      I1=IDAY                                                           MEHCAL    180
      J1=IMONTH                                                         MEHCAL    181
      K1=IYEAR                                                          MEHCAL    182
      WRITE(1,26) IDAYCNT,I1,J1,K1                                      MEHCAL    183
   26 FORMAT(4I5)                                                       MEHCAL    184
   23 CONTINUE                                                          MEHCAL    185
      IXDAY5=1                                                          MEHCAL    186
   22 CONTINUE                                                          MEHCAL    187
      IXMON5=1                                                          MEHCAL    188
   21 CONTINUE                                                          MEHCAL    189
      IDAYCNT=99999                                                     MEHCAL    190
      WRITE(1,25) IDAYCNT                                               MEHCAL    191
   25 FORMAT(I5)                                                        MEHCAL    192
      END                                                               MEHCAL    193
```

```
C PROGRAM CRIT IS DESIGNED TO DETERMINE THE CRITICAL ACTIVITY PATH        MEHCRIT     2
C REQUIRED TO COMPLETE A GIVEN PROJECT. THE CRIT PROGRAM IS BEING USED    MEHCRIT     3
C TO DETERMINE THE CRITICAL PATH OF A CROP IMPROVEMENT LOAN PROJECT IN    MEHCRIT     4
C KOREA.                                                                  MEHCRIT     5
C                                                                         MEHCRIT     6
C   PROGRAM NAME--KOREAN CROP IMPROVEMENT AID LOAN PROJECT                MEHCRIT     7
C                                                                         MEHCRIT     8
      PROGRAM CRIT (INPUT,OUTPUT,TAPE60=INPUT,TAPE61,TAPE61=OUTPUT,PUNCH) MEHCRIT     9
      DIMENSION N(250), E(250), L(250), P(600), S(600), T(600), R(600),   MEHCRIT    10
     1LAG(250), TO(600), TL(600), TP(600), CP(600), KL(600), A(600,5),IT  MEHCRIT    11
     2(600),I1T(600),JT(600),KT(600),ID(600),I1D(600),JD(600),KD(600)     MEHCRIT    12
     3,D(600),IIE(600),IJE(600),IKE(600),IIL(600),IJL(600),IKL(600),IL(   MEHCRIT    13
     4600),IF(600),ALAG(250),AE(250),IN(250),JIE(250),JJE(250),JKE(250),  MEHCRIT    14
     5AL(250),JIL(250),JJL(250),JKL(250)                                  MEHCRIT    15
      DIMENSION ALPHA(10)                                                 MEHCRIT    16
      COMMON N, N1                                                        MEHCRIT    17
      REAL M,L,LAG                                                        MEHCRIT    18
      INTEGER P, S, R, CP                                                 MEHCRIT    19
      DATA ALAG(1)/-1./                                                   MEHCRIT    20
C     REMARK -- N(I) IS THE NUMBER OF EVENT I                             MEHCRIT    21
C     REMARK -- F(I) IS THE EVENT PRECEEDING ACTIVITY I                   MEHCRIT    22
C     REMARK -- S(I) IS THE EVENT SUCCEEDING ACTIVITY I                   MEHCRIT    23
C     REMARK -- R(I) IS THE NUMBER OF THE I*TH-RANKED ACTIVITY            MEHCRIT    24
C     REMARK -- E(I) IS THE EARLIEST TIME FOR EVENT I                     MEHCRIT    25
C     REMARK -- L(I) IS THE LATEST TIME FOR EVENT I                       MEHCRIT    26
C     REMARK -- C IS THE MINIMUM TIME TO COMPLETE THE PROJECT             MEHCRIT    27
C     REMARK -- T(I) IS THE EFFECTIVE TIME TO COMPLETE ACTIVITY I.        MEHCRIT    28
C     REMARK -- TP(I) IS THE PESSIMISTIC TIME TO COMPLETE ACTIVITY I.     MEHCRIT    29
C     REMARK -- TL(I) IS THE LIKELY TIME TO COMPLETE ACTIVITY I.          MEHCRIT    30
C     REMARK -- TO(I) IS THE OPTIMISTIC TIME TO COMPLETE ACTIVITY I.      MEHCRIT    31
C     REMARK -- LAG(I) IS THE FLOAT TIME ASSOCIATED WITH EVENT I          MEHCRIT    32
C     REMARK -- N1 IS THE NUMBER OF EVENTS                                MEHCRIT    33
C     REMARK -- N2 IS THE NUMBER OF ACTIVITIES                            MEHCRIT    34
C     REMARK -- N4 IS THE NUMBER OF EVENTS ON THE CRITICAL PATH           MEHCRIT    35
C     REMARK -- D(I) IS THE LATEST COMPLETION TIME FOR ACTIVITY I         MEHCRIT    36
C     REMARK -- ID(I) IS THE LATEST COMPLETION TIME FOR ACTIVITY I IN     MEHCRIT    37
C                     DAYS                                                MEHCRIT    38
C     REMARK -- IT(I) IS THE EFFECTIVE TIME TO COMPLETE THE ACTIVITY I    MEHCRIT    39
C                     IN DAYS                                             MEHCRIT    40
C     REMARK -- I1T(I) IS THE DAY ASSOCIATED WITH THE EARLIEST            MEHCRIT    41
C                      COMPLETION TIME FOR ACTIVITY I                     MEHCRIT    42
C     REMARK -- JT(I) IS THE MONTH ASSOCIATED WITH THE EARLIEST           MEHCRIT    43
C                     COMPLETION OF ACTIVITY I                            MEHCRIT    44
C     REMARK -- KT(I) IS THE YEAR ASSOCIATED WITH THE EARLIEST            MEHCRIT    45
C                     COMPLETION TIME FOR ACTIVITY I                      MEHCRIT    46
C     REMARK -- I1D(I) IS THE DAY ASSOCIATED WITH THE MAXIMUM             MEHCRIT    47
C                      COMPLETION TIME FOR ACTIVITY I                     MEHCRIT    48
C     REMARK -- JD(I) IS THE MONTH ASSOCIATED WITH THE MAXIMUM            MEHCRIT    49
C                     COMPLETION TIME FOR ACTIVITY I                      MEHCRIT    50
C     REMARK -- KD(I) IS THE YEAR ASSOCIATED WITH THE MAXIMUM             MEHCRIT    51
C                     COMPLETION TIME FOR ACTIVITY I                      MEHCRIT    52
C                                                                         MEHCRIT    53
      MI = 60                                                             MEHCRIT    54
      MO = 61                                                             MEHCRIT    55
      LL=600                                                              MEHCRIT    56
      MM=250                                                              MEHCRIT    57
      READ(MI,65) IDATA,IEDGE                                             MEHCRIT    58
      READ (MI,66) ALPHA                                                  MEHCRIT    59
      WRITE (MO,67)                                                       MEHCRIT    60
      WRITE(MO,68) ALPHA                                                  MEHCRIT    61
C                                                                         MEHCRIT    62
C     INITIALIZE ARRAYS                                                   MEHCRIT    63
C                                                                         MEHCRIT    64
      DO 2 I=1,MM                                                         MEHCRIT    65
      IKL(I)=0                                                            MEHCRIT    66
      IJL(I)=0                                                            MEHCRIT    67
      IIL(I)=0                                                            MEHCRIT    68
      IKE(I)=0                                                            MEHCRIT    69
      IJE(I)=0                                                            MEHCRIT    70
      IIE(I)=0                                                            MEHCRIT    71
      D(I)=0                                                              MEHCRIT    72
      N(I) = 0                                                            MEHCRIT    73
      E(I) = 0.                                                           MEHCRIT    74
      L(I) = 0.                                                           MEHCRIT    75
      LAG(I) = 0.                                                         MEHCRIT    76
      KL(I) = 0                                                           MEHCRIT    77
      ALAG(I)=0                                                           MEHCRIT    78
      IN(I)=0                                                             MEHCRIT    79
      AE(I)=0                                                             MEHCRIT    80
      JIE(I)=0                                                            MEHCRIT    81
      JJE(I)=0                                                            MEHCRIT    82
```

```
      AL(I)=0                                                           MEHCRIT    83
      JIL(I)=0                                                          MEHCRIT    84
      JJL(I)=0                                                          MEHCRIT    85
      JKL(I)=0                                                          MEHCRIT    86
 2    CP(I) = 0                                                         MEHCRIT    87
      DO 3 I=1,LL                                                       MEHCRIT    88
      KT(I)=0                                                           MEHCRIT    89
      JT(I)=0                                                           MEHCRIT    90
      I1T(I)=0                                                          MEHCRIT    91
      KD(I)=0                                                           MEHCRIT    92
      JD(I)=0                                                           MEHCRIT    93
      I1D(I)=0                                                          MEHCRIT    94
      P(I) = 0                                                          MEHCRIT    95
      S(I) = 0                                                          MEHCRIT    96
      T(I) = 0.                                                         MEHCRIT    97
      TO(I) = 0.                                                        MEHCRIT    98
      TL(I) = 0.                                                        MEHCRIT    99
 3    TP(I) = 0.                                                        MEHCRIT   100
      JFLG = 0                                                          MEHCRIT   101
C                                                                       MEHCRIT   102
C    READ ACTIVITIES                                                    MEHCRIT   103
C                                                                       MEHCRIT   104
      DO 4 I = 1,LL                                                     MEHCRIT   105
      READ (MI,69) P(I), S(I), TO(I), TL(I), TP(I), (A(I,J),J=1,5)      MEHCRIT   106
      N2=I-1                                                            MEHCRIT   107
      IF(P(I)-0) 4,5,4                                                  MEHCRIT   108
 4    CONTINUE                                                          MEHCRIT   109
 5    CONTINUE                                                          MEHCRIT   110
      CALL UPDATE (N2,P,S,MI,NEWNUM,MO)                                 MEHCRIT   111
C                                                                       MEHCRIT   112
C    CALCULATE EVENT LIST                                               MEHCRIT   113
C                                                                       MEHCRIT   114
      N1=0                                                              MEHCRIT   115
      DO 9 I = 1, N2                                                    MEHCRIT   116
      DO 6 J = 1, N1                                                    MEHCRIT   117
      IF (P(I) .EQ. N(J)) GO TO 7                                       MEHCRIT   118
 6    CONTINUE                                                          MEHCRIT   119
      N1 = N1+1                                                         MEHCRIT   120
      N(N1) = P(I)                                                      MEHCRIT   121
 7    DO 8 J = 1, N1                                                    MEHCRIT   122
      IF (S(I) .EQ. N(J)) GO TO 9                                       MEHCRIT   123
 8    CONTINUE                                                          MEHCRIT   124
      N1 = N1+1                                                         MEHCRIT   125
      N(N1) = S(I)                                                      MEHCRIT   126
 9    CONTINUE                                                          MEHCRIT   127
C                                                                       MEHCRIT   128
C    CALCULATE EXPECTED TIME                                            MEHCRIT   129
C                                                                       MEHCRIT   130
      IF (JFLG-1) 12,10,12                                              MEHCRIT   131
 10   DO 11 J = 1, N2                                                   MEHCRIT   132
 11   T(J) = TO(J)                                                      MEHCRIT   133
 12   DO 13 JJ = 1, N2                                                  MEHCRIT   134
 13   T(JJ) = (TO(JJ)+4*TL(JJ)+TP(JJ))/6                                MEHCRIT   135
C                                                                       MEHCRIT   136
C    PRINT ACTIVITIES INPUT AND EXPECTED TIMES FOR EACH ACTIVITY        MEHCRIT   137
C                                                                       MEHCRIT   138
      WRITE (MO,67)                                                     MEHCRIT   139
      WRITE (MO,70)                                                     MEHCRIT   140
      WRITE (MO,71)                                                     MEHCRIT   141
      WRITE (MO,72)                                                     MEHCRIT   142
      KKK=0                                                             MEHCRIT   143
      DO 16 I = 1, N2                                                   MEHCRIT   144
      IF(KKK.LT.50) GO TO 14                                            MAY1575     1
      KKK=0                                                             MEHCRIT   146
      WRITE(MO,67)                                                      MEHCRIT   147
      WRITE (MO,70)                                                     MEHCRIT   148
      WRITE (MO,71)                                                     MEHCRIT   149
      WRITE (MO,72)                                                     MEHCRIT   150
 14   IF(TO(I).LE.TL(I).AND.TL(I).LE.TP(I)) GO TO 15                    MEHCRIT   151
      WRITE(MO,73)                                                      MEHCRIT   152
      WRITE(MO,74 ) I                                                   MEHCRIT   153
      WRITE(MO,67)                                                      MEHCRIT   154
      STOP                                                              MEHCRIT   155
 15   WRITE (MO,75) I, (A(I,J),J=1,5), P(I), S(I), TO(I), TL(I), TP(I), MEHCRIT   156
     1T(I)                                                              MEHCRIT   157
      KKK=KKK+1                                                         MEHCRIT   158
 16   CONTINUE                                                          MEHCRIT   159
C                                                                       MEHCRIT   160
C    RANK ACTIVITIES ON ASCENDING PREDECESSOR NUMBER                    MEHCRIT   161
C                                                                       MEHCRIT   162
      DO 17 I = 1, N2                                                   MEHCRIT   163
```

```
 17   R(I) = I                                                          MEHCRIT   164
      N9 = N2                                                           MEHCRIT   165
 18   N9 = N9-1                                                         MEHCRIT   166
      N8 = 0                                                            MEHCRIT   167
      DO 20 I = 1, N9                                                   MEHCRIT   168
      KP = R(I)                                                         MEHCRIT   169
      KP1 = R(I+1)                                                      MEHCRIT   170
      IF (P(KP)-P(KP1)) 20,20,19                                        MEHCRIT   171
 19   R1 = R(I)                                                         MEHCRIT   172
      R(I) = R(I+1)                                                     MEHCRIT   173
      R(I+1) = R1                                                       MEHCRIT   174
      N8 = 1                                                            MEHCRIT   175
 20   CONTINUE                                                          MEHCRIT   176
      IF (N8-1) 21,18,21                                                MEHCRIT   177
C                                                                       MEHCRIT   178
C   FIND EARLY EVENT TIMES                                              MEHCRIT   179
C                                                                       MEHCRIT   180
 21   DO 23 I = 1, N2                                                   MEHCRIT   181
      KP = R(I)                                                         MEHCRIT   182
      N3 = P(KP)                                                        MEHCRIT   183
      CALL INT (N3, K)                                                  MEHCRIT   184
      I1 = K                                                            MEHCRIT   185
      KP = R(I)                                                         MEHCRIT   186
      N3=S(KP)                                                          MEHCRIT   187
      CALL INT(N3,K)                                                    MEHCRIT   188
      I2 = K                                                            MEHCRIT   189
      KP = R(I)                                                         MEHCRIT   190
      M = E(I1)+T(KP)                                                   MEHCRIT   191
      IF (E(I2)-M) 22,23,23                                             MEHCRIT   192
 22   KP = R(I)                                                         MEHCRIT   193
      E(I2) = E(I1)+T(KP)                                               MEHCRIT   194
 23   CONTINUE                                                          MEHCRIT   195
C                                                                       MEHCRIT   196
C     RANK ACTIVITIES IN DESCENDING ORDER OF SUCCESSOR                  MEHCRIT   197
C                                                                       MEHCRIT   198
      DO 24 I = 1, N2                                                   MEHCRIT   199
 24   R(I) = I                                                          MEHCRIT   200
      N9 = N2                                                           MEHCRIT   201
 25   N9 = N9-1                                                         MEHCRIT   202
      N8 = 0                                                            MEHCRIT   203
      DO 27 I = 1, N9                                                   MEHCRIT   204
      KP = R(I)                                                         MEHCRIT   205
      KP1 = R(I+1)                                                      MEHCRIT   206
      IF (S(KP)-S(KP1)) 26,27,27                                        MEHCRIT   207
 26   R1 = R(I)                                                         MEHCRIT   208
      R(I) = R(I+1)                                                     MEHCRIT   209
      R(I+1) = R1                                                       MEHCRIT   210
      N8 = 1                                                            MEHCRIT   211
 27   CONTINUE                                                          MEHCRIT   212
      IF (N8-1) 28,25,28                                                MEHCRIT   213
C                                                                       MEHCRIT   214
C    FIND LATE EVENT TIMES                                              MEHCRIT   215
C                                                                       MEHCRIT   216
 28   DO 30 I = 1, N2                                                   MEHCRIT   217
      KP = R(I)                                                         MEHCRIT   218
      N3 = S(KP)                                                        MEHCRIT   219
      CALL INT (N3, K)                                                  MEHCRIT   220
      I1 = K                                                            MEHCRIT   221
      KP = R(I)                                                         MEHCRIT   222
      N3 = P(KP)                                                        MEHCRIT   223
      CALL INT (N3, K)                                                  MEHCRIT   224
      I2 = K                                                            MEHCRIT   225
      KP = R(I)                                                         MEHCRIT   226
      M = L(I1)+T(KP)                                                   MEHCRIT   227
      IF (L(I2)-M) 29,30,30                                             MEHCRIT   228
 29   KP = R(I)                                                         MEHCRIT   229
      L(I2) = L(I1)+T(KP)                                               MEHCRIT   230
 30   CONTINUE                                                          MEHCRIT   231
      KP = R(1)                                                         MEHCRIT   232
      N3 = S(KP)                                                        MEHCRIT   233
      CALL INT (N3, K)                                                  MEHCRIT   234
      C = E(K)                                                          MEHCRIT   235
      DO 31 I = 1, N1                                                   MEHCRIT   236
 31   L(I) = C-L(I)                                                     MEHCRIT   237
C                                                                       MEHCRIT   238
C    CALCULATE FLOAT (LAG)                                              MEHCRIT   239
C                                                                       MEHCRIT   240
      DO 32 I = 1, N1                                                   MEHCRIT   241
 32   LAG(I) = L(I)-E(I)                                                MEHCRIT   242
      IF(IDATA.EQ.0) GO TO 34                                           MEHCRIT   243
      DO 33 I=1,N1                                                      MEHCRIT   244
```

```
      IL(I)=IFIX(L(I)*7)                                                MEHCRIT   245
      IE(I)=IFIX(E(I)*7)                                                MEHCRIT   246
 33   CONTINUE                                                          MEHCRIT   247
      GO TO 36                                                          MEHCRIT   248
 34   DO 35 I=1,N1                                                      MEHCRIT   249
      IL(I)=IFIX(L(I))                                                  MEHCRIT   250
      IE(I)=IFIX(E(I))                                                  MEHCRIT   251
 35   CONTINUE                                                          MEHCRIT   252
 36   READ(1,76) IDAYCNT,I1,J1,K1                                       MEHCRIT   253
      IKE(1)=IKL(1)=K1                                                  MEHCRIT   254
      IJE(1)=IJL(1)=J1                                                  MEHCRIT   255
      IIE(1)=IIL(1)=I1                                                  MEHCRIT   256
      ICNT=0                                                            MEHCRIT   257
 37   READ(1,76) IDAYCNT,I1,J1,K1                                       MEHCRIT   258
      IF(IDAYCNT.EQ.99999) GO TO 56                                     MEHCRIT   259
      IF(IDAYCNT.EQ.ICNT) GO TO 37                                      MEHCRIT   260
      DO 39  I=2,N1                                                     MEHCRIT   261
 38   CONTINUE                                                          MEHCRIT   262
      IF(IDAYCNT.EQ.IE(I)) GO TO 40                                     MEHCRIT   263
      IF(IDAYCNT.EQ.IL(I)) GO TO 41                                     MEHCRIT   264
 39   CONTINUE                                                          MEHCRIT   265
      GO TO 37                                                          MEHCRIT   266
 40   IKE(I)=K1                                                         MEHCRIT   267
      IJE(I)=J1                                                         MEHCRIT   268
      IIE(I)=I1                                                         MEHCRIT   269
      IF(IE(I).EQ.IL(I)) GO TO 41                                       MEHCRIT   270
      ICNT=IDAYCNT                                                      MEHCRIT   271
      I=I+1                                                             MEHCRIT   272
      GO TO 38                                                          MEHCRIT   273
 41   IKL(I)=K1                                                         MEHCRIT   274
      IJL(I)=J1                                                         MEHCRIT   275
      IIL(I)=I1                                                         MEHCRIT   276
      IF(I.EQ.N1) GO TO 42                                              MEHCRIT   277
      ICNT=IDAYCNT                                                      MEHCRIT   278
      I=I+1                                                             MEHCRIT   279
      GO TO 38                                                          MEHCRIT   280
 42   CONTINUE                                                          MEHCRIT   281
      REWIND 1                                                          MEHCRIT   282
C                                                                       MEHCRIT   283
C     PRINT EVENT TIMES                                                 MEHCRIT   284
C                                                                       MEHCRIT   285
      WRITE (MO,67)                                                     MEHCRIT   286
      WRITE(MO,77)                                                      MEHCRIT   287
      WRITE(MO,71)                                                      MEHCRIT   288
      WRITE (MO,78)                                                     MEHCRIT   289
      WRITE(MO,79)                                                      MEHCRIT   290
      KKK=0                                                             MEHCRIT   291
      DO 44 I = 1, N1                                                   MEHCRIT   292
      IF(KKK.LT.50) GO TO 43                                            MAY1374     1
      KKK=0                                                             MEHCRIT   294
      WRITE (MO,67)                                                     MEHCRIT   295
      WRITE(MO,77)                                                      MEHCRIT   296
      WRITE(MO,71)                                                      MEHCRIT   297
      WRITE (MO,78)                                                     MEHCRIT   298
      WRITE(MO,79)                                                      MEHCRIT   299
 43   WRITE(MO,80) N(I),E(I),IIE(I),IJE(I),IKE(I),L(I),IIL(I),IJL(I),IKL MEHCRIT   300
     2(I),LAG(I)                                                        MEHCRIT   301
      KKK=KKK+1                                                         MEHCRIT   302
 44   CONTINUE                                                          MEHCRIT   303
C                                                                       MEHCRIT   304
C  PRINT MINIMUM FLOAT TIMES                                            MEHCRIT   305
C                                                                       MEHCRIT   306
      WRITE(MO,67)                                                      MEHCRIT   307
      WRITE(MO,81)                                                      MEHCRIT   308
      WRITE(MO,71)                                                      MEHCRIT   309
      WRITE(MO,78)                                                      MEHCRIT   310
      WRITE(MO,79)                                                      MEHCRIT   311
      J=1                                                               MEHCRIT   312
      KKK=0                                                             MEHCRIT   313
      ALAG(1)=-1                                                        MAY1575     2
      DO 47  I=1,N1                                                     MEHCRIT   314
      IF(LAG(I).LT.IEDGE) GO TO 45                                      MEHCRIT   315
      ALAG(J)=LAG(I)                                                    MEHCRIT   316
      IN(J)=N(I)                                                        MEHCRIT   317
      AE(J)=E(I)                                                        MEHCRIT   318
      JIE(J)=IIE(I)                                                     MEHCRIT   319
      JJE(J)=IJE(I)                                                     MEHCRIT   320
      JKE(J)=IKE(I)                                                     MEHCRIT   321
      AL(J)=L(I)                                                        MEHCRIT   322
      JIL(J)=IIL(I)                                                     MEHCRIT   323
      JJL(J)=IJL(I)                                                     MEHCRIT   324
```

```
      JKL(J)=IKL(I)                                                     MEHCRIT   325
      J=J+1                                                             MEHCRIT   326
      GO TO 47                                                          MEHCRIT   327
 45   IF(KKK.LT.50) GO TO 46                                            MAY1475     1
      KKK=0                                                             MEHCRIT   329
      WRITE(MO,67)                                                      MEHCRIT   330
      WRITE(MO,84)                                                      MEHCRIT   331
      WRITE(MO,71)                                                      MEHCRIT   332
      WRITE(MO,78)                                                      MEHCRIT   333
      WRITE(MO,79)                                                      MEHCRIT   334
 46   IF(LAG(I).LT.1) GO TO 47                                          MEHCRIT   335
      WRITE(MO,80) N(I),E(I),IIE(I),IJE(I),IKE(I),L(I),IIL(I),IJL(I),   MEHCRIT   336
     2IKL(I),LAG(I)                                                     MEHCRIT   337
      KKK=KKK+1                                                         MEHCRIT   338
 47   CONTINUE                                                          MEHCRIT   339
C                                                                       MEHCRIT   340
C  PRINT MAXIMUM FLOAT TIMES                                            MEHCRIT   341
C                                                                       MEHCRIT   342
      WRITE(MO,67)                                                      MEHCRIT   343
      WRITE(MO,82)                                                      MEHCRIT   344
      WRITE(MO,71)                                                      MEHCRIT   345
      WRITE(MO,78)                                                      MEHCRIT   346
      WRITE(MO,79)                                                      MEHCRIT   347
      IF(ALAG(I).EQ.-1) GO TO 89                                        MEHCRIT   348
      KKK=0                                                             MEHCRIT   349
      J=J-1                                                             MEHCRIT   350
      DO 49  I=1,J                                                      MEHCRIT   351
      IF(KKK.LT.50) GO TO 48                                            MAY1374     4
      KKK=0                                                             MEHCRIT   353
      WRITE(MO,67)                                                      MEHCRIT   354
      WRITE(MO,82)                                                      MEHCRIT   355
      WRITE(MO,71)                                                      MEHCRIT   356
      WRITE(MO,78)                                                      MEHCRIT   357
      WRITE(MO,79)                                                      MEHCRIT   358
 48   WRITE(MO,80) IN(I),AE(I),JIE(I),JJE(I),JKE(I),AL(I),JIL(I),JJL(I), MEHCRIT   359
     2JKL(I),ALAG(I)                                                    MEHCRIT   360
      KKK=KKK+1                                                         MEHCRIT   361
 49   CONTINUE                                                          MEHCRIT   362
      GO TO 100                                                         MAY1374     5
 89   WRITE(MO,90)                                                      MEHCRIT   363
C                                                                       MEHCRIT   364
C     DERIVE THE CRITICAL PATH                                          MEHCRIT   365
C                                                                       MEHCRIT   366
 100  K=1                                                               MAY1374     6
      DO 51 I = 1, N1                                                   MEHCRIT   368
      IF (ABS(LAG(I))-.00001) 50,51,51                                  MEHCRIT   369
 50   LAG(I) = 0.0                                                      MEHCRIT   370
      CP(K) = N(I)                                                      MEHCRIT   371
      KL(K) = L(I)                                                      MEHCRIT   372
      N4 = K                                                            MEHCRIT   373
      K = K+1                                                           MEHCRIT   374
 51   CONTINUE                                                          MEHCRIT   375
      N5 = N4-1                                                         MEHCRIT   376
      DO 54 I = 1, N5                                                   MEHCRIT   377
      I1 = I+1                                                          MEHCRIT   378
      DO 54 J = I1, N4                                                  MEHCRIT   379
      IF (KL(I)-KL(J)) 54,52,53                                         MEHCRIT   380
 52   IF (CP(I)-CP(J)) 54,54,53                                         MEHCRIT   381
 53   ITEMP = KL(I)                                                     MEHCRIT   382
      JTEMP = CP(I)                                                     MEHCRIT   383
      KL(I) = KL(J)                                                     MEHCRIT   384
      CP(I) = CP(J)                                                     MEHCRIT   385
      KL(J) = ITEMP                                                     MEHCRIT   386
      CP(J) = JTEMP                                                     MEHCRIT   387
 54   CONTINUE                                                          MEHCRIT   388
      DO 55 I=1,N2                                                      MEHCRIT   389
      N3=P(I)                                                           MEHCRIT   390
      CALL INT(N3,K)                                                    MEHCRIT   391
      I1=K                                                              MEHCRIT   392
      N3=S(I)                                                           MEHCRIT   393
      CALL INT(N3,K)                                                    MEHCRIT   394
      I2=K                                                              MEHCRIT   395
      D(I)=L(I2)-E(I1)                                                  MEHCRIT   396
 55   CONTINUE                                                          MEHCRIT   397
      GO TO 57                                                          MEHCRIT   398
 56   WRITE(MO,71)                                                      MEHCRIT   399
      WRITE(MO,83)                                                      MEHCRIT   400
      WRITE(MO,67)                                                      MEHCRIT   401
      REWIND 1                                                          MEHCRIT   402
      I=0                                                               MEHCRIT   403
      GO TO(57,57,57) I                                                 MEHCRIT   404
```

```
      STOP
 57   CONTINUE
C
C  PRINT ACTIVITY TIMES
C
      WRITE(MO,67)
      WRITE(MO,84)
      WRITE(MO,71)
      WRITE(MO,85)
      WRITE(MO,86)
      KKK=0
      DO 61 I=1,N2
      IF(KKK.LT.50) GO TO 58
      KKK=0
      WRITE(MO,67)
      WRITE(MO,84)
      WRITE(MO,71)
      WRITE(MO,85)
      WRITE(MO,86)
 58   DO 91 J=1,N1
      IF(S(I).EQ.N(J)) GO TO 93
 91   CONTINUE
 93   JJ1=IIE(J)
      JJ2=IJE(J)
      JJ3=IKE(J)
      KK1=IIL(J)
      KK2=IJL(J)
      KK3=IKL(J)
      IF(ABS(T(I)-D(I))-.00001) 60,59,59
 59   WRITE(MO,87) P(I),S(I),(A(I,J),J=1,5),T(I),JJ1,JJ2,
     2JJ3,D(I),KK1,KK2,KK3
      KKK=KKK+1
      GO TO 61
 60   WRITE(MO,88) P(I),S(I),(A(I,J),J=1,5),T(I),JJ1,JJ2,
     2JJ3,D(I),KK1,KK2,KK3
      KKK=KKK+1
 61   CONTINUE
      IF(1-NEWNUM) 62,62,64
 62   PUNCH 66, ALPHA
      DO 63  I=1,N2
      PUNCH 69,P(I),S(I),TO(I),TL(I),TP(I),TP(I),(A(I,J),J=1,5)
 63   CONTINUE
 64   WRITE(MO,67)
 65   FORMAT(2I5)
 66   FORMAT(10A7)
 67   FORMAT(1H1,//)
 68   FORMAT(14H0PROGRAM CRIT  ,10A7,//)
 69   FORMAT(2I3,3F7.2,3X,4A10,A8)
 70   FORMAT(* TABLE ONE     INPUT DATA AND EXPECTED TIMES FOR EACH ACTIV
     2ITY*)
 71   FORMAT(1H0)
 72   FORMAT(1H0* NO.                    ACTIVITY DISCRIPTION
     2   PRED     SUC    TO     TL     TP          EXPECTED TIME*,/)
 73   FORMAT(//,*  ERROR IN THE ACTIVITY TIME ESTIMATES*)
 74   FORMAT(//,*  ERRORS APPEAR IN THE*,I4,*TH EVENT*)
 75   FORMAT(1H ,I3,3X,4A10,A8,2I7,F8.2,2F7.2,8X,F8.2)
 76   FORMAT(4I5)
 77   FORMAT(* TABLE TWO   LIST OF FLOAT TIME BY ACTIVITY*)
 78   FORMAT(1H0*            EARLIEST TIME                        LATEST TIME
     2                       FLOAT TIME*)
 79   FORMAT(* EVENT  (IN WEEKS OR DAYS)      DATE     (IN WEEKS OR DAYS)
     2          DATE    (IN WEEKS OR DAYS)*,/)
 80   FORMAT(1H ,I4,5X,F10.2,10X,I2,*-*,I2,*-*,I4,3X,F10.2,10X,I2,*-*,I2
     2,*-*,I4,3X,F10.2)
 81   FORMAT(*  TABLE THREE  LIST OF ACTIVITIES WITH MINIMUM FLOAT TIMES
     2*)
 82   FORMAT(* TABLE FOUR   LIST OF ACTIVITIES WITH MAXIMUM FLOAT TIMES*
     2)
 83   FORMAT(* ERROR--THE NUMBER OF WORKING DAYS IN THE PROJECT EXCEEDS
     +THE*,/,* LENGTH OF THE CALANDER. REFER TO THE MANUAL FOR INSTRUCTI
     +ONS*,/,* ON HOW TO INCREASE ITS LENGTH*)
 84   FORMAT    (* TABLE FIVE     LISTING OF THE ACTUAL AND MAXIMUM COMPL
     1ETION TIMES FOR EACH ACTIVITY*,/,15X,* AND THE DESIGNATION OF ACTI
     2VITIES ON THE CRITICAL PATH*)
 85   FORMAT(1H0*
     2                ACTUAL TIME                        MAXIMUM TIME*)
 86   FORMAT(* PREDECESSOR SUCCESSOR                     ACTIVITY DISCRIPTIO
     2N            (IN WEEKS OR DAYS)     DATE     (IN WEEKS OR DAYS)    DAT
     3E*,/)
 87   FORMAT(1H,4X,I3,9X,I3,6X,4A10,A8,F9.2, 7X,I2,*-*,I2,*-*,I4,F13.2
     2,6X,I2,*-*,I2,*-*,I4)
```

```
 88   FORMAT(1H,4X,I3,9X,I3,6X,4A10,A8,F9.2, 7X,I2,*-*,I2,*-*,I4,F13.2   MEHCRIT   486
     2,6X,I2,*-*,I2,*-*,I4,5H   CP)                                     MEHCRIT   487
 90   FORMAT(//,*  THERE ARE NO ACTIVITIES WITH FLOAT TIMES GRATER THAN  MEHCRIT   488
     2 IEDGE*)                                                          MEHCRIT   489
      END                                                               MEHCRIT   490
C                                                                        EHCRIT   491
C  SUBROUTINE INT                                                        EHCRIT   492
C                                                                        EHCRIT   493
      SUBROUTINE INT (N3, K)                                            EHCRIT   494
      COMMON N, N1                                                      MEHCRIT   495
      DIMENSION N(250)                                                  MEHCRIT   496
C                                                                       MEHCRIT   497
C     FIND INTERNAL NUMBER ,K, OF FVENT N3.                             MEHCRIT   498
C                                                                       MEHCRIT   499
      DO 1 J = 1, N1                                                    MEHCRIT   500
      K = J                                                             MEHCRIT   501
      IF (N(K)-N3) 1,2,1                                                MEHCRIT   502
 1    CONTINUE                                                          MEHCRIT   503
      PRINT 3, N3                                                       MEHCRIT   504
      STOP                                                              MEHCRIT   505
    2 RETURN                                                            MEHCRIT   506
 3    FORMAT    (///,19H NO EVENT NUMBER   ,I3)                         MEHCRIT   507
      END                                                               MEHCRIT   508
C                                                                       MEHCRIT   509
C  SUBROUTINE UPDATE                                                    MEHCRIT   510
C                                                                       MEHCRIT   511
      SUBROUTINE UPDATE (N2,P,S,MI,NEWNUM,MO)                           MEHCRIT   512
      INTEGER IORDER(50),S2(600),P(600),S(600)                          MEHCRIT   513
C                                                                       MEHCRIT   514
C  READ NEW EVENT DATA                                                  MEHCRIT   515
C                                                                       MEHCRIT   516
      READ(MI,1 ) NEWNUM                                                MEHCRIT   517
 1    FORMAT(4X,I3)                                                     MEHCRIT   518
      IF(EOF(MI).NE.0) GO TO 8                                          MEHCRIT   519
      READ(MI,2 ) (IORDER(J),J=1,NEWNUM)                                MEHCRIT   520
 2    FORMAT(4X,20I3)                                                   MEHCRIT   521
      DO 3 J=1,NEWNUM                                                   MEHCRIT   522
      I=IORDER(J)                                                       MEHCRIT   523
      READ(MI,4 ) S2(I)                                                 MEHCRIT   524
 4    FORMAT(1X, I3)                                                    MEHCRIT   525
 3    CONTINUE                                                          MEHCRIT   526
C                                                                       MEHCRIT   527
C  RENUMBER PRECEEDING AND SUCCEEDING EVENT NUMBERS                     MEHCRIT   528
C                                                                       MEHCRIT   529
      DO 5   J=1,NEWNUM                                                 MEHCRIT   530
      KKK=IORDER(J)                                                     MEHCRIT   531
      KK=IORDER(J)+1                                                    MEHCRIT   532
      P(KK)=S2(KKK)                                                     MEHCRIT   533
      KK=KK+1                                                           MEHCRIT   534
      DO   6 M=KK,N2                                                    MEHCRIT   535
      IF(P(M).LT.P(KK-1)) GO TO   6                                     MEHCRIT   536
      P(M)=P(M)+1                                                       MEHCRIT   537
 6    CONTINUE                                                          MEHCRIT   538
      DO   7 K4=1,N2                                                    MEHCRIT   539
      IF(S(K4).LT.S2(KKK) ) GO TO                                       MEHCRIT   540
      IF(K4.EQ.KKK) GO TO 7                                             MEHCRIT   541
      S(K4)=S(K4)+1                                                     MEHCRIT   542
 7    CONTINUE                                                          MEHCRIT   543
 5    CONTINUE                                                          MEHCRIT   544
 8    CONTINUE                                                          MEHCRIT   545
      RETURN                                                            MEHCRIT   546
      END                                                               MEHCRIT   547
```