AGENCY FOR INTERNATIONAL DEVELOPMENT
WASHINGTON, D. C. 20523

BIBLIOGRAPHIC INPUT SHEET

FOR AID USE ONLY
Batch 31

1. SUBJECT CLASSIFICATION

A. PRIMARY
Serials — Y-AA00-0000-G214

B. SECONDARY
Agriculture--General--Nigeria

2. TITLE AND SUBTITLE

A simulation model of the Nigerian agricultural economy; progress report, April-Nov. 1969

3. AUTHOR(S)

(101) Mich.State Univ. Dept.of Agr.Economics

4. DOCUMENT DATE	5. NUMBER OF PAGES	6. ARC NUMBER
1969	120p.	ARC

7. REFERENCE ORGANIZATION NAME AND ADDRESS

Mich.State

8. SUPPLEMENTARY NOTES *(Sponsoring Organization, Publishers, Availability)*

(Research summary)

9. ABSTRACT

10. CONTROL NUMBER

PN-AAB-749

11. PRICE OF DOCUMENT

12. DESCRIPTORS

Nigeria
Sector analysis

13. PROJECT NUMBER

14. CONTRACT NUMBER

CSD-1557 Res.

15. TYPE OF DOCUMENT

AID 590-1 (4-74)

A SIMULATION MODEL OF THE NIGERIAN AGRICULTURAL ECONOMY

A Progress Report

Submitted to the Agency for International Development
under the auspices of Contract No. AID/csd-1557,
Agricultural Sector Models, by Michigan State University

April 1, 1969 - November 1, 1969

Agricultural Economics Miscellaneous Report No. 1969-12

Prepared by:
Thomas J. Manetsch
Marvin L. Hayenga
Albert N. Halter
Thomas W. Carroll
Gloria Page
Earl Kellogg
Michael Abkin
Kwong-Yuan Chong
Kioumars Paryani
Glenn L. Johnson, Director

November 1, 1969
East Lansing, Michigan

RECEIVED
JAN 20 1970

ERRATA

Page 12 The variable CRF in Equation L4 should not be subscripted.

Page 19 Equation (L24) should read:

SUPCFN(t) = CALAN(t) x (TCFLN(t) - TLNBCF(t))
+ CALAN(t) x TLNBCF(t)

Page 51 Equation M 29 should read:

CAP(t+DT) = CAP(t) + DT*CPL * (XPL(t) + CROUT3(1))

Page 65 Fly <u>free</u> instead of fly full (3 times)

Page 72 Top line should read:

PF(1), PF(2), PF(3), PF(4) = ...

Page 15 In equation (L11), "C4" should be "CL4".

Page 19 Line 4 should read:

Total groundnut and <u>cotton</u> land, ...

TABLE OF CONTENTS

I Introduction. 1

II Description of Northern Model

The Northern Model. 1
Detailed Description of the Northern Model. 8
Land Allocation 9
The Production, Marketing and Distribution Component 21
The Processing Component. 32
The Modernization Component 39
The Population Component. 53
Changes in the Northern Nigeria Beef Industry Model Since the Progress Report to A.I.D. Dated April 26, 1968. 61
Preliminary Tests of the Northern Model 68

III An Initial Conception of a Southern Region Crop Sector. 75

IV Beef Marketing and Transportation in Nigeria--An Allied Study. 93

V Future Plans. 107

VI Appendix. 111

LIST OF FIGURES, GRAPHS AND TABLES

Figure 1	Major Sectors and Flows of A Simulation Model of the Nigerian Economy.	2
Figure 2	The Four Sub-Regions of the Northern Model (Map)	3
Figure 3	Major Sectors and Interactions of the Northern Nigerian Agricultural Model.	5
Figure PR-1	. . . . .	33
Figure M-1	. . . . .	42
Figure M-2	. . . . .	44
Figure M-3	. . . . .	47
Figure B-1	Transportation Routes through Nigeria	94
Graph	Traditional Death Rate Versus TDNA.	62
Graph	Modern Death Rate Versus TDNA	62
Table P-1	Definition of Coefficient in the Marketing and Production Sector (Northern Region)	29
Table P-2	Other Coefficients and Initial Values in the Marketing and Production Sector (AMP)	31
Table PR-1	. . . . .	37
Table PRET-1	Selected Results of Northern Model Sensitivity Tests	74
Table B-1	Costs of Transporting Cattle From Kano to the West	96
Table B-2	Costs of Transporting Cattle from Kano to the West with Vaccination.	96
Table B-3	Costs of Transporting Cattle from Maiduguri to the East.	97
Table B-4	Costs of Transporting Cattle from Sokoto to the West	97
Table B-5	Optimum Transportation Pattern for Beef in Nigeria Under Present Conditions	99

Table		Page
Table B-6	Optimum Transportation Pattern with Unlimited Rail Cars Available.	100
Table B-7	Optimum Transportation Pattern with a Trypanosomiasis Vaccination Program.	104
Table B-8	Price Structure for Alternative Transfer Charges	105
Table B-9	Shipment Patterns for Alternative Transfer Charges.	106

INTRODUCTION

This report describes the progress made by the Michigan State University interdisciplinary research team in developing a simulation model of the Nigerian agricultural economy during the period April 1, 1969 - November 1, 1969. It supplements earlier reports submitted to AID dated April 26, 1968, October 31, 1968, and April 1, 1969. The detailed framework of the model was microscopically illustrated in the first progress report. The further evolution of our perception of the development process and consequent requirements of the model have been discussed in previous progress reports. This report will provide an overview of recent accomplishments of the research team, and skeleton outlines of the major operational components of the model. After a fairly detailed description of the components, which are now fully programmed and are being incorporated into a model of the Northern Region of Nigeria, some interesting problems involved in modeling the southern tree crop economy will be discussed briefly.

Recent Research Progress

The research team has been working on several fronts during the past six months. In May, 1969, Dr. Tom Manetsch and Earl Kellogg spent a few weeks in Nigeria gathering additional information for modeling several sub-sectors of the economy. Kellogg particularly accumulated information related to beef production and marketing. During this visit, they also presented a seminar on the simulation project at the Nigerian Institute of Social and Economic Research at the University of Ibadan.

The primary modeling efforts have been (a) further development of the Northern Region land allocation mechanism, (b) development of a modernization component permitting introduction of modern production inputs, (c) modeling the dynamics of population growth and composition, (d) further refinement of the beef production submodel, (e) development of a model to determine the most efficient location of abattoirs and mode of cattle or beef transportation, (f) development of a processing industry submodel, (g) aggregating several submodels into a Northern Regional model, (h) developing the initial concepts and corresponding computational routines required to adequately reflect the farmers' enterprise decision in the Southern Region, where both perennial and annual crops are alternatives, (i) estimating the importance of various factors affecting the demand for beef and major food crops.

The mechanism simulating the enterprise responsiveness to changes in relative profitability in several ecological zones within Northern Nigeria

has been developed further from that reported in Manfred Leupolt's working paper (1). To allow more ready analysis of the location of various crops within the region, several fairly homogeneous areas are analyzed separately and subsequently aggregated. In this way, the realism of the aggregate responses should be improved, and the likely production areas can be spotted more easily for policy-makers.

In consideration of labor shortages or surpluses in the Nigerian economy, the changing size and composition of the labor force is incorporated into the overall model of the Nigerian agricultural economy. The agricultural labor force is compared to the labor required in agricultural production and marketing. If labor is restrictive, the productive enterprises' total size is restricted accordingly. At the same time, the population growth rate affects the demand for food and food prices, farm prices and incomes, and subsequent production decisions.

The beef production model described in detail in our first progress report has been refined and combined with a processing and marketing subroutine. In addition, Earl Kellogg has determined the likely costs and returns of alternative changes in the beef processing and transport procedures in Nigeria. This phase of the modeling effort is nearly complete and will result in Kellogg's Ph.D. dissertation to be completed in the near future.

A general processing model has been developed which takes as input the flow of raw product from the production sector. The model then simulates the transformation mechanism and provides an accounting of volume of finished product(s), processing costs, profits, required facility invest-

ments, labor utilized, and product losses incurred in the transformation process.

A modernization subroutine has been developed adjusting the speed and extent of producer enterprise responses to various levels of expected profitability, difusion effects, and overt promotion of modern practices. The subroutine allows these responses to differ as a result of manipulating the extension funds and available manpower. If we can approximate the effects of changes in extension service efforts, we can provide an extension "budget box" or executive routine which will allow a policy-maker to experiment with various budget and manpower skill combinations. In this way, better informed choices among alternative extension service development efforts can be facilitated.

We are currently involved in combining several components of the Northern Regional model and testing them for consistency and realism. In addition, we are "tracking" the behavior of the model through the past decade, comparing it to available information about the behavior of the economy not used in model formulation, and estimating previously unknown parameters by choosing values which both seem reasonable and fit the actual historical behavior of the Nigerian economy.

Modeling the resource allocation decision mechanism in the Southern Region is complicated by the fact that both perennial tree crops and annual food crops are production alternatives. Developing a model which will compare the appropriate profit potentials for perennial and annual

crops is somewhat more complicated than for annual crops alone. Further, the longer time-horizon brings into play time discount rates and short-run cash flow considerations. The fact that perennials, once planted, are semi-fixed assets whose productivities are often responsive to short-run changes in management practice makes the problems involved fairly difficult in realistically modeling farmers' likely decision processes. However, we have made some progress in this area, and are initially modeling some of the computational processes necessary for realistic comparisons among alternative annual and perennial enterprises.

Accurately estimating the demand growth for high calorie or high protein foods is sometimes quite difficult statistically because the countries are poor and underdeveloped. We have been able to estimate roughly demand functions for beef and food crops which will serve as first approximations in our overall model. We have taken these estimates and transformed them into a form consistent with the variables and structure of the rest of our model.

While the summary above provides a general description of the progress made during the last six months, a more specific mathematical description of several major model components may provide a clearer picture of what has been accomplished.

To explicitly define the major factors we've considered, the structural relations our research suggests are fairly realistic, and the dynamics of the development process as we see it, the mathematical relationships which are precursors to our computer programs are summarized and explained in the following section of the report.

The Northern Model

As indicated in previous progress reports, the agricultural economy of Nigeria was viewed, for purposes of simulation, as two major interacting agricultural regions--the southern tree and root crop economy and the northern annual crop and livestock economy. See Figure 1. Within this broad categorization the model includes much finer detail but the intrinsic differences between annual and perennial production processes and inter-regional trade patterns make this major dichotomy a useful one.

In this section of the report the broad outlines of the northern model will be described in some detail along with the model components which make up this model and preliminary results of simulation runs made to date.

General Description of the Northern Model

The current model incorporates a number of features of the model developed by Leupolt earlier in this program. The primary reason for the modification was to introduce additional detail to permit better simulation of crop competition including interactions between export crop and cash food production. The revised model also incorporates beef modernization and population components.

The current model views Northern Nigeria (the old Northern Region) as being made up of the four distinct sub-regions shown in Figure (2). The regions are defined on the basis of current cropping patterns which in turn reflect differing climatic and soil patterns throughout Northern Nigeria. Region I includes that land area which is uniquely

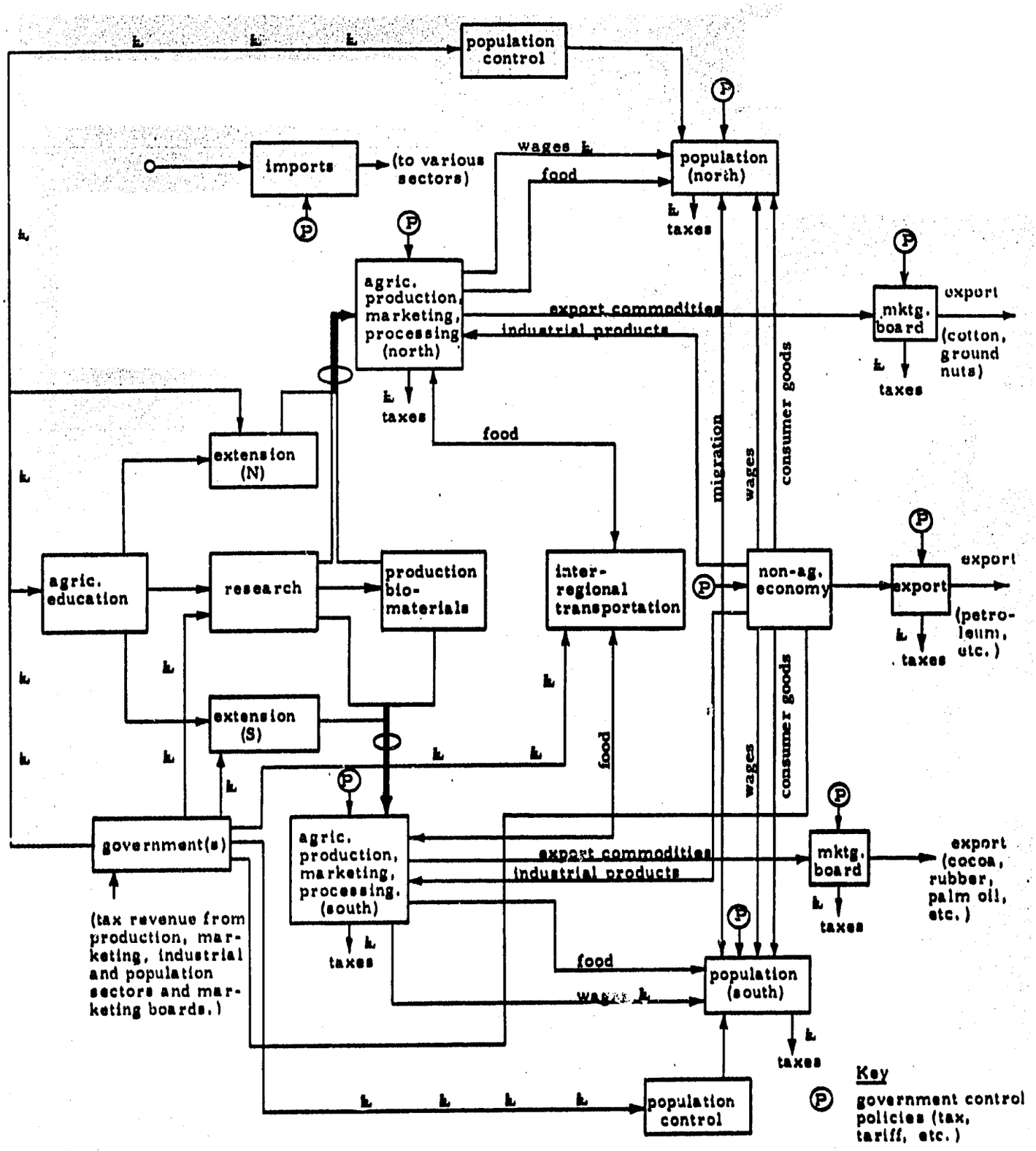

Figure 1.

MAJOR SECTORS AND FLOWS OF A SIMULATION MODEL OF THE NIGERIAN ECONOMY.

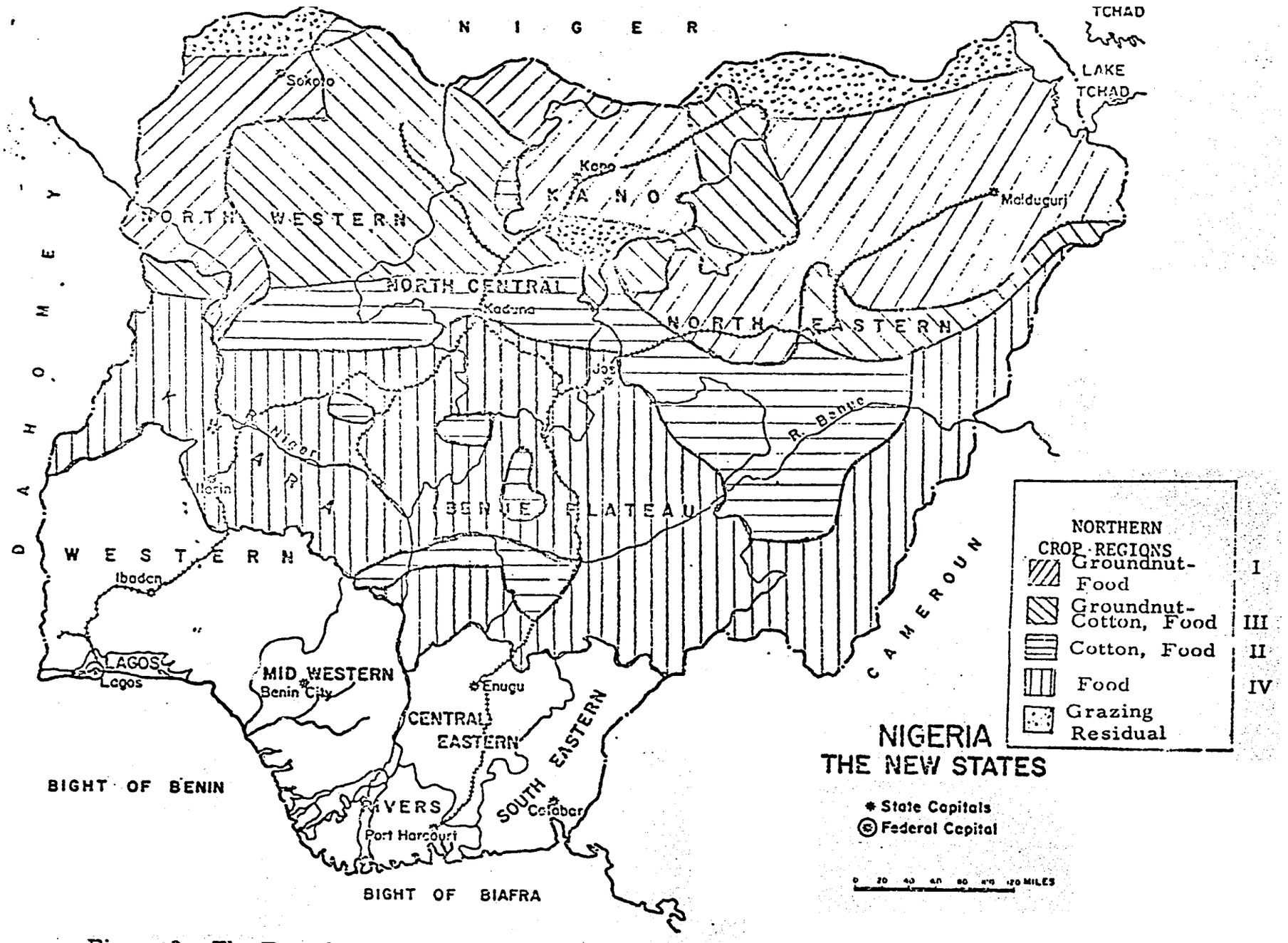

Figure 2. The Four Sub - Regions of the Northern Model

suitable for the production of groundnuts along with food crops. Similarly, Region II defines a cotton-food zone and Region III a region in which groundnuts and cotton can compete with each other and with food for land use. Region IV defines an area, largely in what has been called the "middle belt" of Nigeria, where groundnuts and cotton cannot be grown effectively. This region can, however, produce various food crops which may become important for future regional specialization in Nigeria.

The overall organization of the northern model is shown in Figure (3). As shown, the production activities of the model are groundnuts, cotton, food produced in competition with groundnuts and cotton, food not produced in competition with groundnuts and cotton, and beef. (The current model includes as a component the beef model developed during the first year of the program). The major outputs of the model are physical outputs of the various production activities and measures of system performance including contributions to GNP, tax revenue generated, employment, foreign exchange earnings, per-capita income and nutrition and demand for industrial goods.

The model seeks to explore the impact of alternative development strategies upon these outputs and includes as major policy variables (from the user's standpoint) allocation of resources to various modernization programs for the five production activities, marketing board producer price policies for groundnuts and cotton, and tax policies.

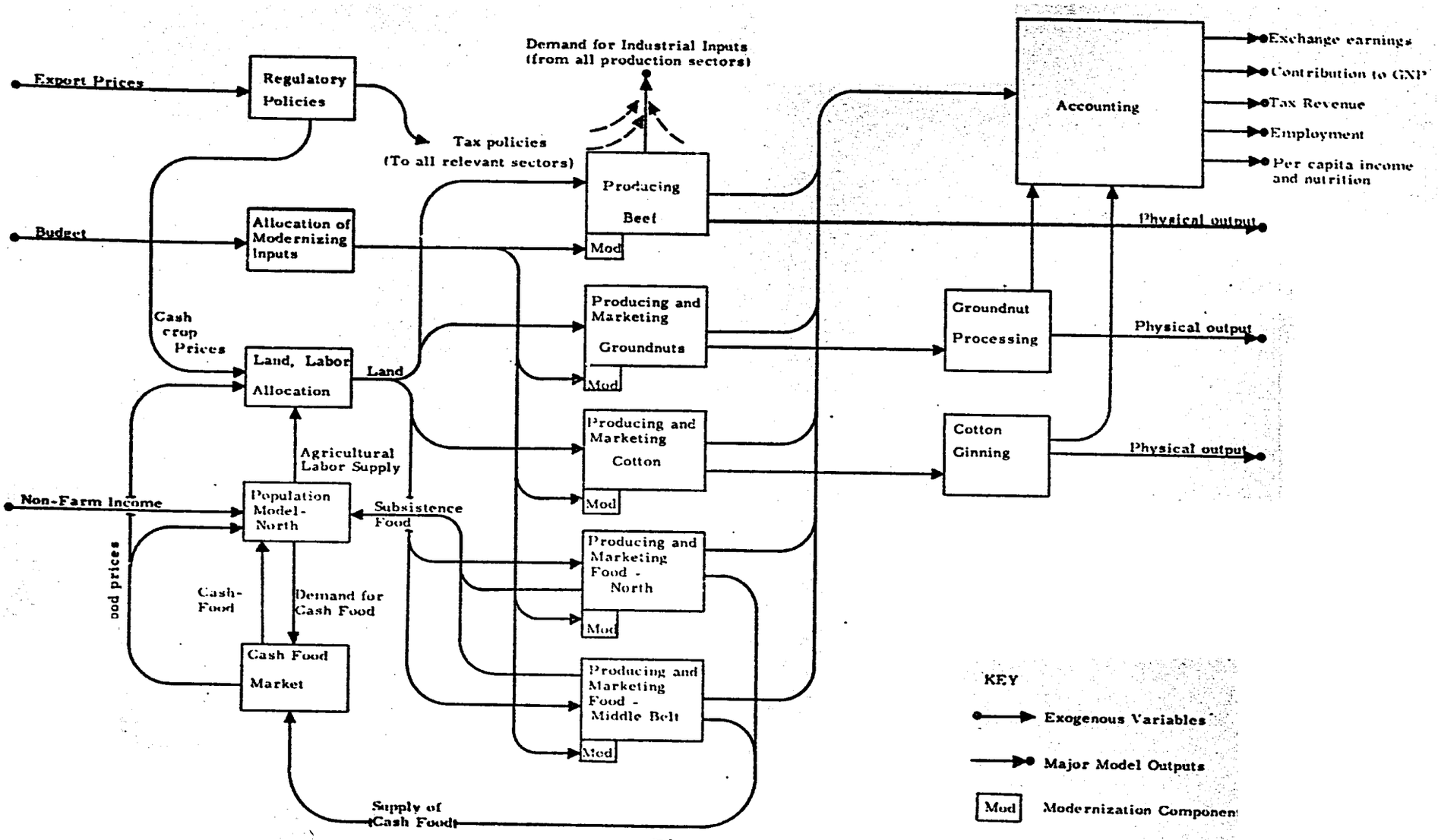

Figure 3

Major Sectors and Interactions of the Northern Nigerian Agricultural Model

Of key importance in determining the behavior of the model (and its ability to simulate real world behavior) is the model component which allocates land and labor to the various production enterprises. In summary, the total arable land in the four northern sub-regions of Figure (2) is determined by available labor, relevant cash returns to labor, the proportion of the population that is economically active, and a mechanization coefficient. Given total arable land, land available for cash crops is computed as a residual after subsistence food needs have been provided for.[1] The land allocation mechanism then allocates this residual to the viable alternatives in each of the four regions on the basis of cash returns per unit of labor. The model includes behavioral and production lags which provide for a smooth transition of allocatable land to the most profitable option available in each region.

The land allocation mechanism described determines the supply response of northern producers to changes in crop prices. Since groundnut and cotton prices are established in Nigeria by marketing board and/or world prices, only food prices are determined endogenously in the model from the interactions of supply and demand. Demand for cash food[2] in the model is determined as a function of non-farm

---

1/ This assumption of food self-sufficiency reflects what appears to be the present situation in Northern Nigeria. It is possible in the model to allow the level of self-sufficiency to be a function of other development variables.

2/ "Food" in the model is an aggregate of all basic foodstuffs, grains and roots, which dominate Nigerian consumpiton.

income (an exogenous variable in this model)[1], non-farm population and food prices. The two latter variables are generated endogenously by the model. At the present time beef prices are not endogenously determined by the model though the work of Kellogg may make this possible in the near future.

The model incorporates a modernization component which permits evaluation of the application of modern inputs to one or more of the crop enterprises. One possible application of this feature would be to study the effects of alternative allocations of extension and other inputs to production campaigns along the lines of those recommended by CSNRD. In summary, the modernization component is a general purpose sub-routine which is called whenever the modernization of one or more crops has been specified for a particular simulation run. Modernization takes place only if the adoption of the proposed innovations is economically profitable for the producer and at a rate determined by the level of profitability. The major outputs of the modernization component are average yields of the various crops which are computed as a weighted average of the yields of land allocated to traditional and modern production. This component also includes an innovation diffusion mechanism which allows for spontaneous diffusion of modern techniques if necessary pre-conditions are met.

Given this broad description of the model as background, the following sections describe the model and its structure in considerable detail. While the description is necessarily mathematical, verbal descriptions of some of the more important relationships will be included for the non-mathematically oriented reader.

1/ Future plans are to develop a rough model of the non-agricultural economy which will generate non-farm income.

Detailed Description of the Northern Model

In developing the northern model six basic model components were designed which could be replicated and interconnected to simulate the major agricultural activities and institutions of the region. The advantages of this "building block" approach are two-fold:

1) By using a basic set of model building blocks repetitively it is possible to simulate a large number of homogeneous activities (such as production, marketing and processing of crops) without developing a unique model for each activity.
2) Properly designed building blocks can be used in a wide range of problem situations--in other countries etc.

The basic components developed for the northern model are the following:

1) Beef Production
2) Land Allocation
3) Marketing and Production
4) Modernization
5) Population
6) Processing

Of these, the beef component has been described in detail in the progress report dated April, 1968 and will not be discussed here. The remaining components are described in detail in what follows.

Land Allocation

The current model views Northern Nigeria as being made up of four distinct ecological sub-regions. In Venn diagrams it would appear as follows:

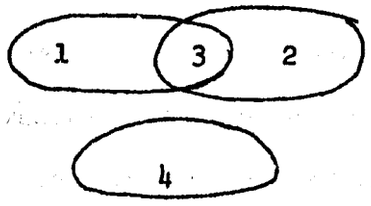

1. Groundnut - food subregion
2. Cotton - food subregion
3. Groundnut - cotton-food subregion
4. Food only subregion

The purpose of this component of the model is to simulate the behavior of Northern Nigerian farmers in allocating cultivated lands to: (1) subsistence food, (2) cash food, i.e., food that sells in the cash market (3) cash crops, i.e., groundnuts and cotton, within the sub-region which is appropriate. For example- in region 1 and 2 the choice must be made between planting food for subsistence or for the cash market, or planting a cash crop.[1] The mathematical equations to follow describe the allocation mechanism between cash and non-cash crops and then cash crops for sub-regions 1 and 2, sub-region 3, and sub-region 4 in that order. Since the prices of groundnuts and cotton are set by marketing boards these are taken as policy variables; however, cash food prices are determined endogenously and the mechanism of cash food price determination is given in the last section.

1/ The area of each region can contract but not expand in the time span of the model.

Allocation Between Cash and Non-Cash Crops within a Sub-region

The acres of land allocatible to cash crops is computed by equation (L1).

(L1) $AL_i(t) = LABA_i(t) \times EAP_i(t) \times APL_i(t) \times PF_i(t)^{B_i}$

where:

AL_i = Land allocatible to cash crops in sub-region i (i = 1, 2, 3, 4)

$LABA_i$ = Effective labor available (man units) in sub-region i (computed in the population component).

EAP_i = Proportion of the population in sub-region i that is active in producing cash crops (see Equation (L2)).

PF_i = A profitability index for sub-region i (see Equation (L4)

APL_i = Acres of cash crops cultivated per unit of labor at "normal" profitability (PF_i = 1) (see Equation (L3))

B_i = Parameters that determine the magnitude of responses to profitability.

The variable EAP (computed in equation L2) introduces the concept of an economically active population which includes those farmers who have responded to recently-learned opportunities to start growing and selling on the cash market.

(L2) $EAP_i(t + DT) = EAP_i(t) + C7_i \times DT \times (1 - EAP_i(t))$

Where:

EAP_i = Proportion of the population in region i that is economically active. $0<EAP_i<1$

$C7_i$ = A model parameter that determines the rate at which farmers enter the economically active population.

DT = The basic time increment used in the simulation.

This equation is a crude model of a diffusion process which gradually increases the economically active proportion over time. EAP will gradually approach one in the limit as time increases. The parameter $C7_i$, which determines the speed of transition in each of the four regions, may be set at some constant value which approximates existing conditions or made dependent upon other variables such as extension expenditures, infrastructure developments, etc.

The variable APL_i in Equation (L1) is an endogenous model variable computed by Equation (L3):

(L3) $APL_i(t) = MAX\ [APL_{oi} \times CM_i - SFL_i(t)/LABA_i,\ 0]$

Where:

APL_i = Acres of cash crops per unit of labor in sub-region i

APL_{oi} = Total acres cultivatible per unit of labor in sub-region i at a given level of mechanization.

CM = A mechanization coefficient that introduces the effect of labor saving investments.

SFL_i = Land required for food self-sufficiency in sub-region i (See Equation (L5))

$LABA_i$ = Total labor available in region i - man units

MAX[a,b] = A function that takes the maximum of the terms in brackets.

The profitability indices in Equation (L1) are determined as follows for sub-regions one and two (groundnuts - food and cotton - food):

$$(L4)\quad PF_i(t) = \frac{(TLNF_i(t) \times CR_i(t) + TLCF_i(t) \times CRF_i(t))/AL_i(t)}{(TLNF_i(o) \times CR_i(o) + TLCF_i(o) \times CRF_i(o))/AL_i(o)}$$

Where:

PF_i = Profitability indices for sub-regions one (i = 1) and two (i = 2)

AL_i = Total land allocated to cash earners in sub-region

$TLNF_i$ = Total land in non-food in sub-region i.

$TLCF_i$ = Total land in cash food in sub-region i.

CR_i = Net cash returns from non-food in sub-region i (£/man year).

CRF_i = Net cash returns from cash food in sub-region i (£/man year)

Similiar equations compute profitability indices for sub-region 3 where cotton, groundnuts and food compete and sub-region 4 where food is the only cash earner.

The model next computes the subsistence food land required in each region.

$$(L5)\quad SFL_i(t + DT) = SFL_i(t) + (DT/S3)(DEMR_i(t)/(CALA_i(t)) - SFL_i(t))$$

This equation determines, after an adjustment lag S3, the amount of land SFL_i required to satisfy the regional rural demand for calories, $DEMR_i$, given that $CALA_i$ calories per acre are produced in region i. Here again the index i ranges over the four regions included in the northern model. $DEMR_i$, computed by the population component, is the total calorie requirement of farm families in region i, plus or minus an adjustment factor that can account either for a planned surplus or a planned deficit.[2]

2/ Currently the rural demand, $DEMR_i$, reflects the tendency of Northern Nigerian farmers to be food self-sufficient. Any changes in this behavior pattern would be reflected in changes in the variable $DEMR_i$.

Given the land required for food-self-sufficiency and the land allocated to cash crops in each region, total cultivated land is simply

(L6) $TL_i(t) = AL_i(t) + SFL_i(t) \quad (AL_i(t) \geq 0)$

Where:

AL_i = Allocatable land in region i.

TL_i = Total cultivated land in region i

SFL_i = Total land required for substistence food in region i.

Cash Crops in Sub-regions 1 and 2

The model next allocates AL_1, AL_2, AL_3, and AL_4 to the competing cash crops in each region. It does this on the assumption that farmers will gradually move toward that crop which maximizes the net returns to labor. Land shifts to the more profitable crop at a rate that is proportional to:

1) The percent difference in cash returns per unit of labor that exists between the two crops.
2) The amount of land currently allocated to the less profitable crop.
3) A model parameter, C1, which can be varied to match prevailing farmer behavior.

The equations that perform these functions for sub-region 1 and 2 are:

(L7) $R_i(t) = C1 \times (CR_i(t) - CRF(t)) \times XTL_i(t)/(CR_i(t)) + DAL_i(t)/DT$

Where:

R_i = The rate of change of non-food land (acres/year) for groundnuts (i = 1) and cotton (i = 2)

CR_i = Net cash returns per unit of labor (lagged to include behavioral effects). (L/man year)

CRF = Net food cash returns per unit of labor also lagged (CR_1, CR_2, and CRF are computed by the production and marketing model component).

XTL_i = Total allocatable land in cash food if $CR_i \geq CRF$

= Total land in non-food in region i if $CR_i < CRF$

C1 = A model parameter that controls the speed of land adjustment.

The variable DAL_i in Equation (L7) adds any net increase in allocatable land (AL_i) to the more profitable crop and subtracts any net decline from the less profitable crop via Equation (L8).

$$\text{(L8)} \quad DAL_i(t) = MAX[(AL_i(t) - AL_i(t - DT)),0] \quad \text{if } CR_i(t) \geq CRF(t)$$

$$= MIN\ [(AL_i(t) - AL_i(t - DT)), 0] \quad \text{if } CR_i(t) < CRF(t)$$

Given the rate of change of non-food land from Equation (L7) the model computes <u>total</u> non-food land (in regions one and two) as

$$\text{(L9)} \quad TLNF_i(t) = MAX\ [(TLNF(t - DT) + DT \times R_i(t)), 0]$$

This equation essentially computes the time integral of $R_i(t)$, limited to preclude the possibility of negative land.

To complete the land allocation for regions one and two total cash food land is computed as a residual between total allocatable land, AL_i, and land allocated to non-food production, $TLNF_i$:

$$\text{(L10)} \quad TLCF_i(t) = AL_i(t) - TLNF_i(t)$$

Cash Crops in Sub-region 3

The mechanism for allocating land to the three cash earners in sub-region 3 is similiar to that described though considerably more complex. In words, this part of the model shifts land gradually to the crop with the greatest return per unit of labor. Any net increase in land in sub-region 3 (due to price incentives, population growth, etc.) is added to the land in the most profitable crop. Any decreases in land over time are subtracted from the least profitable option if possible. If this is not possible the decrement is subtracted from the second least profitable crop and so forth. With three competitive crops there are six possible rankings with respect to profitability:

$$CR(1) \geq CR(2) \geq CRF$$
$$CR(1) \geq CRF \geq CR(2)$$
$$CR(2) \geq CR(1) \geq CRF$$
$$CR(2) \geq CRF \geq CR(1)$$
$$CRF \geq CR(1) \geq CR(2)$$
$$CRF \geq CR(2) \geq CR(1)$$

Here CR(1), CR(2) and CRF are respectively the current time averaged cash returns (£/man-year) for groundnuts, cotton and cash food respectively. The simulation model determines which of the six above cases applies and then allocates land, beginning with the least profitable crop. The following equations apply:

(L11) $RJ3(t) = C4 \times TLJ3(t - DT) \times (CR3 - CR1)/CR3 + MIN[DAL_3(t),0]/DT$

Where:

RJ3 = rate of change of the least profitable crop in region 3 (the joint region in which groundnuts,cotton and food are grown)

TLJ3 = Total land currently in the least profitable crop in region 3. (acres)

CR3 = Cash returns for least profitable crop in sub-region 3 (£/man-year)

CR1 = Cash returns for the most profitable crop in sub-region 3 (£/man-year)

CL4 = A model parameter that determines the speed of adjustment.

MIN = The minimum operation.

The variable, DAL_3, is the difference in allocatable land in region 3 in the past time interval and is given by

(L12) $DAL_3(t) = AL_3(t) - AL_3(t - DT)$

Given RJ3, the model computes a new value for TLJ3 - the total land in the least profitable crop.

(L13) $TLJ3(t) = MAX[TLJ3'(t), 0]$

Where:

$TLJ3'(t) = TLJ3(t - DT) + DT \times RJ3(t)$

Thus, equation (L13) computes TLJ3 as the time integral of RJ3, limited to preclude the possibility of negative land.

The model then allocates land to the second least profitable crop. This, again, assumes that land shifts to the most profitable in proportion to differential profitabilities that exist. In addition, any net <u>reduction</u> in total land area in the region (DAL_3) that could not be removed from the least profitable crop is taken out of this, the second least profitable crop. This behavior is described by the following equations:

(L14) RJ2(t) = CL4 x TLJ2(t - DT) x (CR2(t) - CR1(t))/CR2(t) + RESID(t)/DT

Where:

RJ2 = Rate of change of the second most profitable crop (acres/year)

TLJ2 = Total land in the second most profitable crop (acres)

CR2, CR1 = Cash returns of second and most profitable crops respectively (£/man-year)

and

(L15) RESID(t) = MAX[MIN[TLJ3'(t),0],MIN[DAL_3(t),0]]

Where:

TLJ3' and DAL_3 are defined in Equations (L12) and (L13)

(L16) TLJ2(t) = MAX[TLJ2'(t),0]

Where:

(L17) TLJ2'(t) = TLJ2(t - DT) + DT x RJ2(t)

Again, a constraint is imposed so that land area is non-negative.

Land area in the most profitable crop TLJ1, is computed simply as the residual between total allocatable land AL_3 and TLJ2 and TLJ3:

(L18) TLJ1(t) = AL_3(t) - TLJ2(t) - TLJ3(t)

Note that this equation allocates any net increase in allocatable lar to the most profitable crop. Net decrease in AL_3, as described above, are removed from TLJ3 and TLJ2 if possible. If not, these latter areas are zero and the net decrease applies to TLJ1.

Given the total land areas according to a crop ranking on the basis of profitability, the model then translates these into areas of groundnuts, cotton and cash food by applying the known profitability ranking which

currently pertain for the three crops. The following land areas are thereby defined:

TLJG(t) = Total land in groundnuts in sub-region 3.

TLJC(t) = Total land in cotton in sub-region 3.

TLJF(t) = Total land in cash food in sub-region 3.

Cash Crops in Sub-Region 4

Land allocation in sub-region 4 (the food-only zone) is trivial being simply the total allocatable land (if any) after the food needs of the regional population have been met.

(L19) $TLMBCF(t) = MAX(AL_4(t), 0)$

Where:

TLMBCF is the total cash-food land in sub-region 4 allocated to cash food production.

Totals of Food and Cash Crops for Northern Nigeria

With the above land allocations in the four sub-regions determined it is a simple matter to compute total areas for Northern Nigeria by crop. Total cash food land in the north, TCFLN is given by:

(L20) $TCFLN(t) = TLCF_1(t) + TLCF_2(t) + TLJF(t) + TLMBCF(t)$

Where:

$TLCF_1, TLCF_2$ = Total land in cash food (Sub-region 1 and 2)

$TLJF_3$ = Total land in cash food (Sub-region 3)

TLMBCF = Total land in cash food (Sub-region 4)

Total food land, ZLC1, is simply

(L21) $ZLC1(t) = TCFLN(t) + SFL_1(t) + SFL_2(t) + SFL_3(t) + SFL_4(t)$

Where:

SFL_i is the land required for food self-sufficiency in each sub-region (Equation (L5)).

Total groundnut and food land, TGLN and TCLN, are computed as

(L22) $TGLN(t) = TLNF_1(t) + TLJG(t)$

(L23) $TCLN(t) = TLNF_2(t) + TLJC(t)$

Where:

$TLNF_1$, $TLNF_2$ = The total non-food land in sub-regions 1 and 2 respectively

TLJG = Total groundnut land in sub-region

TLJC = Total cotton land in sub-region 3.

Price Determination For Cash Food

The land allocation component also contains the market mechanism for cash food. It is assumed that the weighted average price of cash food (subsistence foods including guinea corn, millet, yams and cassava) moves in response to differences between aggregate demand and supply. The aggregate supply of cash food, measured in calories per-year is computed by Equation (L24)

(L24) $SUPCFN(t) = CALAN(t) \times (TCFLN(t) - TLMBCF(t) + CALAM(t) \times TLMBCF(t)$

Where:

SUPCFN = Supply of cash food in Northern Nigeria (calories/year)

CALAN = Calories per acre in the north excluding sub-region 4 (primarily from grain production).

CALAM = Calories per acre in sub-region 4 (primarily from root crops)

TLMBCF = Total land allocated to cash food in the sub-region 4

TCFLM - TLMBCF = Total cash food land in the northexcluding sub-region 4.

An unlagged food price is generated by Equation (L25). This variable is lagged by Equation (L26) to account for behavioral effects.

(L25) PFNU(t) = PFNU(t-DT) + DT x CL5 x PFNU(t-DT)x(DEMCFN(t) - SUPCFN(t))/DEMCFN(t)

Where:

PFNU = Unlagged food price - Ł/#

DEMCFN = Demand for cash food in the north - Calories/year. (This variable is computed in the population component and is a function of non-agricultural population, income, and food price)

SUPCFN = Supply of cash food as determined by Equation (L24)

CL5 = Price rate elasticity (This parameter is the precent change in price <u>per unit time</u> per percent excess demand that exists in the market.)

(L26) PFN(t) = PFN(t-DT) + (DT/CL6) x (PFNU(t) - PFN(t-DT))

Where:

PFN = Price of food in Northern Nigeria (Ł/#)

PFNU = Unlagged food price

CL6 = A model parameter proportional to the behavioral lag between excess demand and price change.

This concludes a description of some of the most important features of the land allocation component of the model. For presentation here many details have been omitted.

The Production, Marketing and Distribution Component

This subroutine called AMP in the program has important functions to fulfill within the entire system. It gathers information from most of the other subroutines and brings them together to perform the economic activities. This subroutine is set up only once and the same set of equations applies for all crops of the northern region. An advantage of this subroutine is its relative simplicity and general character. The structure is such that it fits all annual crops under consideration and still is flexible enough to meet specific needs of the single crops.

Each crop enters the subroutine with its own variables. A set of constant coefficients is defined for each particular crop (see Table (P1)). Many other variables are generated internally and vary over time.

In this subroutine there are six categories of computations conducted.

1. input and output relationships
2. wages and employment
3. utilization and distribution of products
4. farm income
5. taxation
6. values added to GNP and productivity measurements

The input-output relationships are determined by the incoming land allocated to each crop (from the land allocation component), labor required and available for each crop, the level of yield and mechanization. The input-output relationships are computed below.

(P1) YLDD = LND x PY

(P2) DEML = $(C_4 \times LND + C_5 \times YLDD)/CM$[1]

---

[1] Present usage of this subroutine in the northern model equates demand for labor (DEML) to the supply (LABA). Labor constraints are introduced by the land allocation component i.e. the variable (LND) in Equation (P1) is based on a labor constraint

(P3) YLDL = (CM x LABA / DEML) x YLDD

(P4) YLD = MINIMUM (YLDD, YLDL)

where:

YLDD = total amount produced if PY reaches the biological maximum (K lbs/year)

PY = yield per acre[1] (lbs/acre/year)

LND = land allocated to a crop (K acres/year)

DEML = total labor demanded for a crop[2] (K men/year)

LABA = labor actually available for a crop (K men/year)

C_4 = labor requirements for cultivation (man-years/acre)

C_5 = labor requirements for harvesting (man-years/lb)

CM = a coefficient for mechanization

YLDL = total production feasible as a function of labor available (K lbs/year)

YLD = total production actually achieved (K lbs/year)

Employment is calculated for the agricultural sector (primary sector) and for the marketing sector (entire sector) as far as agricultural products are concerned.

(P5) EMP = AMINI (LABA, DEML)

(P6) EMPM = C10 x OUTP

(P7) WAGESM = WRM x EMPM

(P8) WAGES = EMP x WR x C16

1/ PY is computed by the modernization component and is determined by production campaigns, diffusion effects, etc.

2/ Labor available and demanded is computed in units of adult men, working 250 days/year.

where:

EMP = men actually employed in agriculture (family and non-family labor) (K Men/year)

MINIMUM (a,b) = a function that takes the Minimum of terms in brackets.

EMPM = employment provided by the marketing sector (K men/year)

OUTP = Output actually marketed (see equation P16)

C10 = a constant determining EMPM

WAGESM = cash/wages paid to the employer in the marketing sector (K ƀ/year)

WRM = annual wage rate in marketing (ƀ/man/year)

WAGES = wages paid of the agricultural sector to non-family labor (K ƀ/year)

WR = annual wage rate in agriculture (ƀ/men-year)

C16 = a constant determining the proportion of non-family labor (% of EMP)

The utilization and distribution of the total output of one crop depends on the number and kinds of products derived from the primary produce. Since all of the primary products go through similar stages of handling, storage and consumption with losses, conversion factors and change in product character involved, a rather generalized set of equations was developed to fit for all crops under consideration. The following equations compute the primary and secondary products.

(P9) YLD1 = C1 * C01 * YLD

(P10) YLD2 = C2 * YLD

(P11) YLD3 = C3 * YLD

where:

YLD 1, 2, 3 = products derived from YLD

CO1, 1, 2, 3 = constants

for a detailed definition and the values of the C- coefficients see Tables (P1) and (P2).

C8, C7, C6 = are losses involved so that OUT 1, OUT 2 and OUT 3 represent the actually available quantities of YLD 1, YLD 2 and YLD 3 computed as follows:

(P12) OUT 1 = C8 x YLD 1

(P13) OUT 2 = C7 x YLD 2

(P14) OUT 3 = C6 x YLD 3

The largest proportion of food crops and parts of groundnut production are consumed on the farm and do not enter the commercial market. This also represents the subsistence income paid in kind.

(P15) YLDW = C14 x EMP x (1 - C16)[1]

(P16) OUTP = C9 * (YLD - YLDW)

where:

YLDW = quantities consumed on the farm (subsistence income in kind) (K lbs/year/region)

C14 = quantities consumed by farm members (lb/capita/year)

C16 = Proportion of non-family labor (% of EMP)

OUTP = quantity of the primary product available for the commercial market (K lbs/year)

C9 = a constant for loss

1/ This relationship applies to cash crops such as groundnuts and cotton. If this component is used to simulate the production of a food crop the following equation applies: YLDW = LSUB x PY where: LSUB is the land allocated to subsistence food.

Quantities arriving on the commercial market are distributed between consumption by non-farm people (OUTP1) export (OUTP2) and processing (OUTP3)

(P17) OUTP 1 = C11 * OUTP

(P18) OUTP 2 = C12 * OUTP

(P19) OUTP 3 = C13 * OUTP

where: C11, C12, C13 are constants defined in Table (P1).

In order to calculate farm income, one needs prices for inputs and outputs. Wages as a cost factor are already defined in Equation P8. The cost of other non-farm inputs are computed in the modernization component and given to the production component as an exogenous variable. The producer price is derived from the marketing price with the notion in mind that the traders are in a relatively strong position compared to the farmers. Therefore, the trader attempts to shift all burden occurring from losses and taxes to the farmer.

(P20) TAXM = TAXRM * PM * OUTP * PPRS

(P21) PP = PM * C9 * (1.-TAXRM -PMAR)

Where:

PPRS = proportion of output sold

TAXM = tax to be paid by the trade sector (K £/year)

PP = producer price received by the farmer (£/lb)

PM = marketing price[1] received by the trader (£/lb)

1/ The marketing prices for all cash crops are set by the Marketing Board. The food price is determined by demand and supply.

C9 = marketing loss

TAXRM = tax rate to be paid from the traders' income (in %)

PMAR = a profit margin held back by the trader (in %)

The farmers' earnings are composed of a subsistence income paid in kind but evaluated at the producer price and normal cash payments for his sold products.

(P22) SUBI = PP * YLDW

(P23) INCP = PP * (YLD - YLDW) x PPRS

where:

SUBI = subsistence income at producer price (non-cash) (K £/year)

INCP = cash received by the farmers (K £/year)

PPRS = proportion of marketable product sold[1]

The farmers' total income and cash income then is given by

(P24) FFGRI = PP * YLD - WAGES - CNFI

(P 25) FFCI = INCP - WAGES - CNFI

where:

FFCRI = total income crop X (cash and kind payments) from (K £/year)

FFCI = cash income from crop X (K £/year)

CNFI = cost of non-farm inputs (K £/year)

The cash income FFCI is available for taxation, non-agricultural consumer goods, education and capital investments in factors of production.

The farmers' tax obilgations are:

(P26) TAXP = TAXRP * FFCI

1/ In a situation in which excess supply exists in the market (cash food market in this case) only a proportion of output can be sold.

leaving the agricultural production sector with a net income of cash of

(P27) PFTP = FFCI - TAXP

where:

TAXP = tax to be paid by the agricultural sector from the earnings of crop X (K ₤/year)

TAXRP = tax rate imposed on the earnings of crop X within the production sector (%)

PFTP = net cash income of the agricultural sector from crop X (K ₤/year)

The figures computed above are not calculated on the farm level but represent the contribution or earnings of a particular crop to the aggregated agricultural sector within one region.

The production and marketing subroutine also computes figures necessary for the national budget (e.g. value added in the production sector and value added in the marketing sectors). It also provides the necessary data for allocating land on the basis of financial returns to the factors of production (e.g. returns per unit of labor and returns per unit of land).

(P28) VAP = PP * YLD - CNFI

(P29) VAM = OUTP * PM * PPRS - INCP

where:

VAP = value added to the production sector by crop X (K ₤/year)

VAM = value added to the marketing sector by crop X (K ₤/year)

The earnings of the factors of production labor and land are obtained by

(P30) PFI = YLD * PP - TAXP - CNFI

PFI can be defined approximately as a joint net income to labor and

land combined. This amount either related to land or to labor gives the returns per unit and are measurements of productivity since not all costs are considered (e.g. capital cost, fixed assets, etc.).

(P31) INMY = PFI / EMP

(P32) RLRE = PFI / DEML

(P33) RLND = PFI / LND

where:

INMY = labor productivity actually achieved at the end of one year based on men employed (฿/man-year)

RLRE = labor productivity for planning purposes based on labor required (฿/man-year)

RLND = returns per acre (฿/acre/year)

This subroutine is flexible enough to calculate additional information s the need arises, e.g. per capita incomes or labor available for the on-agricultural sector, etc..

TABLE P1: Definition of Coefficient in the Marketing and Production Sector (Northern Region)

	Definition	Unit	Groundnut	Cotton	Food Regions 1-3	Food Region 4	Intermediate Output	Variable	Unit
C_{01}	Proportion of net-yield (YLD) used for human consumption	%	.2	0.	1.	1.			
C_1	Content of calories/unit	cal/lb	1500	0.	1870	546.	Total calories	YLD 1	1000 K Cal.
C_8	Amount of YLD 1 available after storage(minus loss)	%	.9	0.	.9	.9	Calories avail. for consumption	OUT 1	1000 K Cal.
C_{02}	Proportion of net-yield(YLD) considered as grain residual	%	.05	.67	.20	.2			
C_2	Content of TDN/unit	%TDN	.7	1.	.7	.7	Total TDN grain residual	YLD 2	1000 # TDN
C_7	Determines YLD 2 available after storage(minus loss)	%	.9	.9	.9	.9	TDN available as grain residual	OUT 2	1000 # TDN
C_3	TDN contained in leaves, rough forages, based on YLD	#TDN / acre	183.	183.	393.	393.	Total TDN rough forages	YLD 3	1000 # TDN
C_6	Determining YLD 3 available after storage(minus loss)	%	.3	.7	.7	.3	TDN available as rough forage	OUT 3	1000 # TDN
C_9	Determines YLD reaching the commercial market(minus loss)	%	.85	.85	.85	.85	Net quantities handled on the commercial market	OUT P	1000 #
C_{10}	Required labor for trade marketing, transportation	man-year per lb	.000016	.000067	.00022	.00022			

TABLE P1: Northern Region (Continued)

	Definition	Unit	Groundnut	Cotton	Food Regions 1-3	Food Region 4	Intermediate Output	Vari-able	Unit
C_{11}	Determines OUT P consumed	%	.0	).	1.	1.	OUT P consumed by non-rural people	OUT P1	1000 lb
C_{12}	Determined OUT P exported	%	.7	.10	0.	0.		OUT P2	1000 lb
C_{13}	Determined OUT P processed	%	.3	.90	0.	0.		OUT P3	1000 lb
C_{14}	Amount considered as subsistence income	lbs/capita FPOP/year	630.	0.	860.	860.	Consumed by rural people	YLD W	1000 lb
C_{16}	Proportion of non-family labor	%	0.	0.	0.	0.			

TABLE P2: Other Coefficients and Initial Values in the Marketing and Production Sector (AMP)

	Labor requirements Cultivation (man-days/acre)	Labor requirements Harvesting (man-days/acre)	C_4 man-year per acre	C_5 man-year per lb.	Py^2 Yield lb/acre	PP^3 Produce price £/lb	PM Market price £/lb	Non-farm inputs lb/YLD	PNFI Price of non-farm inputs
Maize	37	25			790.	.0075			
Rice (irrigated)	153	47			900.	.020			
Millet	40	20			535.	.0068			
Guinea Corn	40	20			890.	.0070			
Cassava	50	12			9000.	.0063			
Cocoyam	95	20			7000.	.0007			
Yam	95	20			10400.	.0063			
Cowpea	34	22			440.	.0075			
Average Food crop									
North	45	21	.18	.000052	700.	.007	.009	.001	.01
South	69	22	.276	.000015	5500.	.0066	.0086	.001	.01
Groundnut	28	28	.11	.00016	700.	.014	.020	.001	.01
Cotton	20	20	.08	.0003	260.	.018	.026	.001	.017
Government (Cotton)	10	10	.04	.0001	400.	.018	.026	.001	.019
Soyabean	34	22	.14	.00026	335.	.011	.016	.001	.01
Cocoa	20	10	.08	.00009	427.	.045	.061	.02	.06
Rubber	10	60	.04	.00075	400.	.061	.082	.09	.02
Oil Palm	10	10	.04	.000025	1200.	.021	.023	.06	.01
Benniseed			.14	.00020	300.	.021	.028		

2) Source: CSNRD Report
FAO Report
Annual Abstracts of Statistics, Nigeria 1966
T. A. Philipp, An Agricultural Notebook

3) Statistical Yearbook 1966, Northern Nigeria
O. B. O. Anthony, The Marketing of Staple Foodstuffs in Nigeria
CSNRD Report
FAO Report
FAO - Socio-Economic Survey (hand notes)

The Processing Component

"General Description of the Model"

One of the purposes of the program is to generate the investment required to maintain processing capacity in balance with the output levels of commodities requiring processing. For this, we are assuming that total capacity is proportional to the main input of the system, RM, the quantity of raw material input. In this model the main input is raw material, RM, which is the output of the production model (or sub-model, of the whole, overall system). We are also taking as given, price of the input, P, wage rates (i.e. traditional and modern), WRM, WRT, respectively and also prices of the outputs, PO1-PO4. The investment of the modern part is also given as a (policy) input, INVM.

The model generates a number of outputs which are shown in Figure PR-1 by arrows. Among them are the income (total revenue), INC=TR, value added, gross profits, employment , wages paid, taxes, traditional and modern capacities, depreciation , exchange capacity, traditional investment and so on. Another important function of the processing component is to compute the returns to modernization which can occur from reduced losses and higher processing efficiency.

In the next pages, we will present a more detailed description of the model, including the structural equations of the component. In the model (see Figure PR-1), the raw material (RM) of a given commodity is passed through a smoothing delay to give us RMS. In this way we have smoothed out the fluctuation of our input RM.

Then the total capacity CAP of the model is assumed to be exogenously given as "C*RMS" which would be about 10 to 20 percent more than the input RMS.

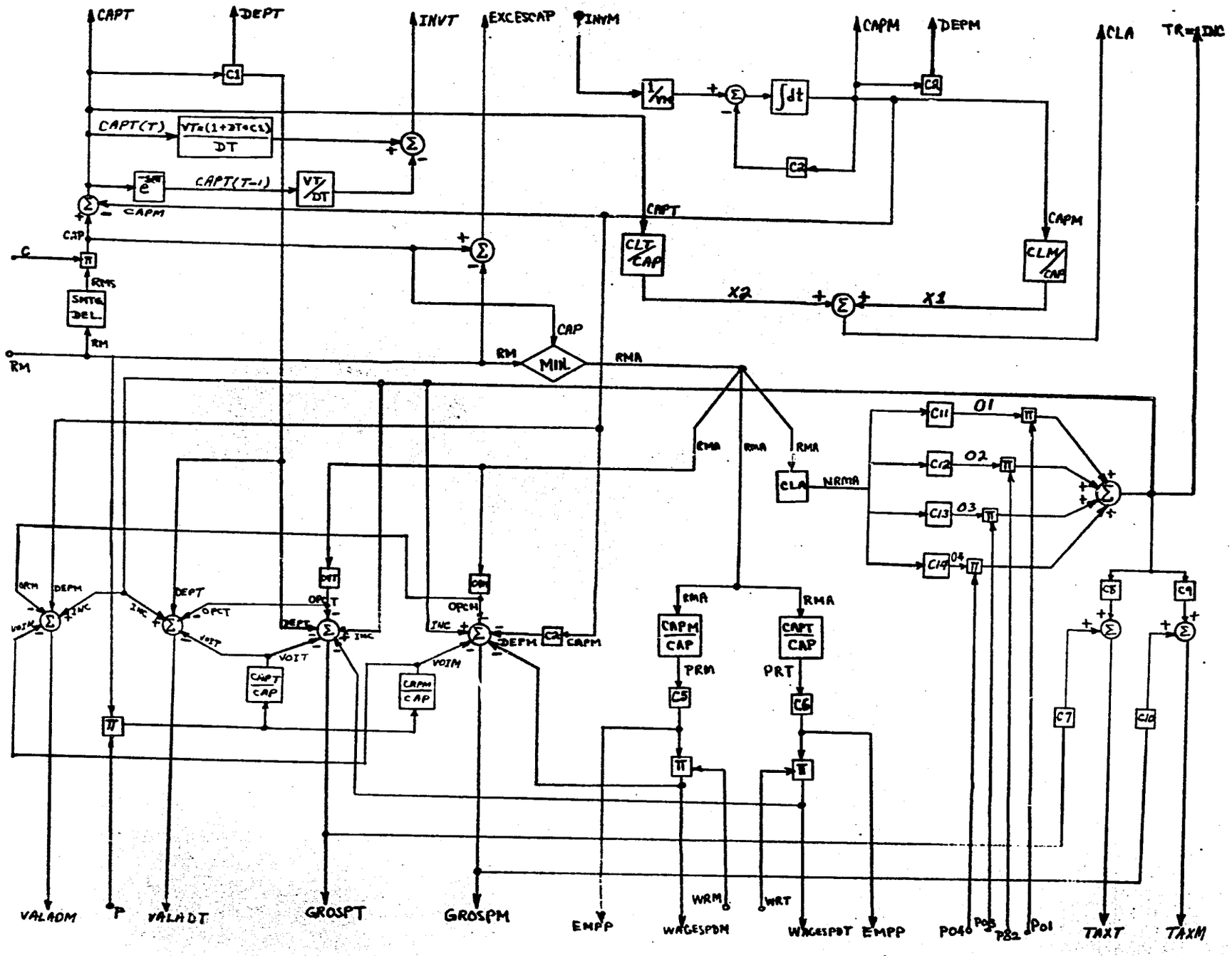
CAPT
DEPT
INVT
EXCESCAP
INVM
CAPM
DEPM
CLA
TR=INC
C1
C2
CAPT(T)
VT=(1+DT*C1)/DT
CAPT(T-1)
VT/DT
CAPM
CAP
C
RMS
SMTG DEL
RM
MIN
RMA
CLT/CAP
CLM/CAP
X2
X1
C11
C12
C13
C14
O1
O2
O3
O4
NRMA
CAPM/CAP
CAPT/CAP
PRM
PRT
C5
C6
C7
C8
C9
C10
VOIM
VOIT
OPCT
OPCM
INC
VALADM
P
VALADT
GROSPT
GROSPM
EMPP
WAGESPDM
WRM
WRT
WAGESPDT
P04
P03
P82
P01
TAXT
TAXM

Figure PR-1.

Having INVM* defined as exogenous variable also, we can compute the CAPM and from that we find DEPM. Then CAPT is simply the difference between CAP and CAPM.

Having this CAPT at hand we can find DEPT and INVT as shown in the Block Diagram (Figure PR-1).

Now to find the "EXCESCAP" we will subtract the input "RM" from the "CAP".

Since the RMA, raw material available, is bounded by the input RM and also capacity of the model, therefore we use the minimum block to get the appropriate flow of the material.

There would always be a processing loss which we will take care of by introducing the CLT and CLM in order to compute the CLA, i.e. Average Coefficient of Loss.

Then multiplying RMA by this CLA would give us the NRMA, net, raw material available. Here we have the model built up in a way such that each material would give us say four different outputs as O1,..., O4. For example, in the case of groundnuts we may have only two outputs, oil and cake; while for cotton it may be three or more different outputs.

Given the prices of these outputs we can compute the INC or TR. In the rest of the model we are computing the value added, VALAD; gross profit, ROSP; employment, EMPP; wages paid; WAGESPD; taxes; TAX.

All of these are being computed for both traditional and modern methods. We have distinguished traditional and modern variables by the letter T, for traditional and letter M, for modern.

For the full description of these variables and abbreviations see Table PR-1.

Here we are assuming (for test purposes) an oscillatory input as:

(PR1) $RM = RM(0) + .3\ RM(0)\ SIN\ [\frac{2\pi}{52} t]$

Then since in s_domain

$$RMS(s) = \frac{1}{1 + sxDEL} RM(s)$$

$$DEL \times s * RMS(s) + RMS(s) = RM(s)$$

i.e. $DEL \times \frac{d}{dt} RMS(t) = RM(t) - RMS(t)$ assuming o- initial conditions

Since

$$\frac{d}{dt} RMS \doteq \frac{RMS(t) - RMS(t-DT)}{DT \times DEL}$$

therefore:

(PR2) $RMS = RMS + \frac{DT}{DEL} * (RM - RMS)$

(PR3) $CAP = C * RMS$

(PR4) $CAP = CAPT + CAPM$

Considering the relationship between the capital, investment and depreciation we have

$$CAPM(t) = CAPM(o) + \int_o^t [INVM(\zeta) * \frac{1}{VM} - DEPM(\zeta)]d\zeta$$

where $DEPM(t) = C2 * CAPM(t)$

Differentiating both sides of above integral equation and using the definition of derivative we have:

$$CAPM(t) = \frac{1.}{(1.+C2*DT)} CAPM(t-DT) + \frac{DT}{VM(1.+C2*DT)} INVM(t)$$

i.e. in FORTRAN

(PR5) CAPM = (1./1.+C2*DT) * CAPM + (DT/VM*(1+C2*DT)) *INVM

then

(PR6) CAPT = CAP - CAPM

Now using the relation

$$CAPT(t) = CAPT(o) + \int_o^t [INVT(\zeta)\frac{1}{VT} - DEPT(\zeta)]d\zeta$$

Which differentiating and using the definition of derivative and also knowing the value of CAPT from egn (6) we have

$$INVT(t) = \frac{VT}{DT} CAPT(t) - \frac{VT}{DT} CAPT(t-DT) + (VT * C1) * CAPT(t)$$

which in FORTRAN rotation gives

(PR7) INVT = ((VT * (DT * C1 + 1)/DT) * CAPT - (VT/DT) * CAPT

Using the fact that

DEPT = (C1) * CAPT

i.e. we are using depreciations as a proportion of the capacities both in traditional and modern parts of the model.

Then by equations

X_1 = CLM (CAPM/CAP)

X_2 = CLT (CAPT/CAP)

CLA = $X_1 + X_2$

We will take into account the amounts of losses both in modern and traditional part from which we find the average coefficient of loss, CLA.

The final stage of the process is done by calculating the net raw material available, NRMA which will be distributed into four brands of outputs proportionately.

The rest of the equations in the model are straight forward applications of definitions and simple programming language.

Table PR-1 (Continued)

PO2	= price of output 2
PO3	= price of output 3
PO4	= price of output 4
PRM	= modern processing
PRT	= traditional processing
RM	= raw material
RMS	= smooth raw material
TAXM	= modern tax
TAXT	= traditional tax
SIN	= sine function
VALADM	= modern value added
VALADT	= traditional value added
VOIM	= value of input, modern
VOIT	= value of input, traditional
VT	= capital output ratio, traditional
VM	= capital output ratio, modern
WAGESPDM	= wages paid modern
WAGESPDT	= wages paid traditional
WRM	= wage rate modern
WRT	= wage rate traditional

The Modernization Component

The primary purpose of this component is to give the model the capability of exploring the impact of modernizing inputs upon system behavior. The primary output of this component is an average productivity (yield/acre) that reflects the extent to which modernization has taken place for a specific commodity. This average productivity is an input to the production component, AMP.

In this component the rate at which modernization takes place is determined by the following factors:

1) Profitability - no modernization takes place unless the net returns from modern practices significantly exceed those of traditional practices.

2) Government or other overt programs to introduce modern inputs.

3) Diffusion effects that propagate modern methods from farmer to farmer.

The simplifying assumption is made that seeds, fertilizer, pesticides, etc. are available and do not constrain the modernization process. The model does, however, compute demands for these inputs which reflect quantities necessary for modernization to proceed at the rate determined by the three factors cited above.

A detailed description of the component including the more important structural equations follows.

The profitability criterion influencing the rate of modernization is an exponentially averaged function of the relative (modern versus traditional) net returns to labor and is computed by Equation (M1).

$$(M1)\quad PC(t) = \frac{(PYM \times PP(t) - PBM/E4 - PFRT \times E143 - PCR \times ESB - E18 \times CPL)/LABM}{PYT \times PP(t)/LABT}$$

Where:

PC = profitability criterion (not averaged)

PYM = attainable modern yield (#/acre)

PYT = average traditional yield (#/acre)

PP = current producer output price ₤/#

E4 = the inverse of biological materials required per acre - acre/#

PBM = price of biological materials ₤/#

PFRT x E143 = value of fertilizer, pesticide, etc. - ₤/acre

PCR = price of credit - %/year

ESB = a variable which in the absence of a subsidy is the credit required per year to sustain modern production (the model parameter E151). If, as a part of a production campaign etc. a cash subsidy is granted, ESB becomes the residual credit requirement subject to interest changes (the model parameter E152).

LABM = labor required per acre - modern

LABT = labor required per acre - traditional

CPL = capital required per acre (modern) - ₤/acre

E18 = depreciation rate

$$(M2)\quad PCA(t) = PCA(t - DT) + DT \times (PC(t) - PCA(t - DT))/DEL1$$

Where:

PCA = exponentially averaged profitability criterion

DEL1 = a constant that determines the weight farmers give to past experience

DT = the time increment used in simulation

The profitability criterion, PCA, is instrumental in determining the rates at which farmers will respond in a diffusion process or to overt campaigns to introduce modern methods. We will first discuss the "production campaign" stream of modernization.

The rate at which land enters a modernization process, RLMPI, as a result of overt promotion is given by Equation (M3):

(M3) RLMPI(t) = E3(t) x FPC1(t) x EXT1(t)

Where:

EXT1 = units of pre-campaign promotion.[1] This in general will be a policy variable during simulation runs.

E3 = the maximum feasible adoption rate per unit of EXT1 (acres/year per unit of EXT1)

FPC1 = a function which introduces the effects of the profitability criteria, PCA, upon the adoption rate

The variable FPC1 is given by Equation (M4) and is shown in Figure (M1):

(M4) FPC1(t) = MAX(E7 x (1 - EXP(- E8 x (PCA(t) - E9))), 0)

Where:

PCA = the criterion measuring the farmers' perception of the profitability of the new methods

MAX(a,b) = a function equal to the maximum of terms within the brackets

EXP = the exponential function

E7, E8, E9 = model parameters (See Figure (M1))

1/ One interpretation of this variable would be the extension worker equivalents engaged in pre-campaign promotion. Another might be mass media units promoting adoption of the modern innovation.

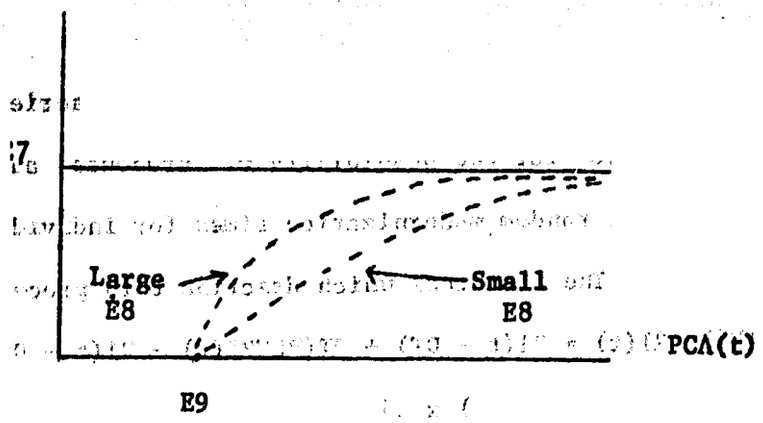

Figure (M1)

As shown in the figure, the parameter E7 determines the maximum value of the function. E9 is a threshold below which no modernization can take place. The parameter E8 determines how rapidly the modernization rate changes with changes in the profitability criterion. It is clear that a wide range of adoptor behavior can be simulated by appropriately assigning values to these three parameters.

The variable E3 in Equation (M3) is computed as:

(M5) E3(t) = E31 - E32 x EXP(- E33 x TCAM)

Where:

TCAM = the length of time the production campaign has been in operation

E31, E32, E33 = model parameters described below

The purpose of this equation is to simulate the phenomena that tends to make promotion easier and/or more efficient as the program progresses. Accordingly E3 has its minimum value (E31 - E32) at the beginning of a campaign (TCAM = 0) and approaches its maximum value (E31) when TCAM is large. Again, a wide range of real world situations

can be simulated by appropriately assigning values to the model parameters.

The modernization process is simulated as a series of exponential delays which allow for the possibility of "dropouts" and represents the phenomena of random modernization times for individual farms in the aggregate. The equations which describe this process follow:

(M6) R1(t) = R1(t - DT) + DT(RLMPI(t) - R1(t - DT))/XDEL2

(M7) XR1(t) = R1(t) x A5

(M8) R2(t) = R2(t - DT) + DT(XR1(t) - R2(t - DT))/XDEL2

(M9) RLMP(t) = RLMP(t - DT) + DT(R2(t) - RLMP(t - DT))/ XDEL2

Where:

RLMP = average rate land leaves the modernization process and begins producing at "modern" levels - acres/yr.

XDEL2 = one-third of the average time required for modernization - years

A5 = one minus the proportion of land that "drops out" due to shortage of technical assistance

R1, XR1, R2 = intermediate rates - acres/year

(M10) A5(t) = MIN(E12 x EXTA(t)/EXTR(t), 1)

Where:

EXTR = Extension workers (or the equivalent) required to sustain the modernization program

EXTA = Extension workers available

E12 = an adjustable model parameter

MIN (a,b) = the minimum of a and b

As shown the parameter E12 determines the threshold at which dropouts start and the dependence of the dropout rate upon the ratio EXTA/EXTR.

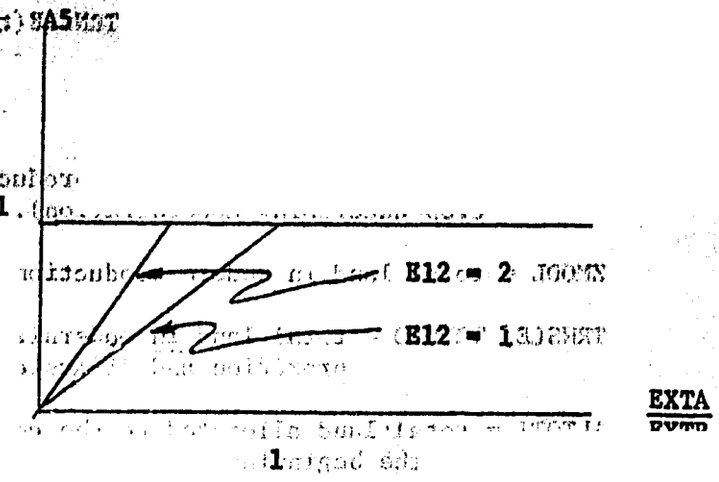

Figure (M2)

In order to compute inputs required for modernization it is important to know how much land is in the modernization process at any given time. The land in modernization due to overt promotion is simply the time integral of RLMPI(t) minus the dropout rate minus the rate land "completes" modernization. Equation (M11) computes TRNSLE - the land in transition from traditional to modern practices due to overt (perhaps extension) promotion.

(M11) TRNSLE(t + DT) = TRNSLE (t) + DT(RLMPI(t) - RLMP(t) - (1 - A5) x R1(t))

The model also computes the total land which has been modernized as a result of overt production campaigns, ZLMZD, as:

(M12) ZLMZD(t + DT) = ZLMZD(t) + DT x RLMP(t).

We will now turn our attention to the simulation of modernization that takes place spontaneously--by diffusion from farmer to farmer.

The rate land "enters" a modernization process, RLMDI, as a result of diffusion is given by:

(M13) RLMDI(t) = FPC2(t) x (TRADL(t) - TRNSLE(t) - TRNSLD(t)) x ZMODL(t)/ALTOTI

Where:

TRADL = total land in traditional production (for the crop undergoing modernization).

ZMODL = total land in modern production - acres.

TRNSLE, TRNSLD = total land in modernization due to overt promotion and diffusion respectively.

ALTOTI = total land allocated to the commodity in question at the beginning of the simulation run.

FPC2(t) = MAX(E11 x (1 - EXP(PCA(t) - E9))),0) - a function (similar to FPCI of Figure M1) which introduces profitability as a determinant of the diffusion rate.

MIN(a,b) = the minimum of a and b

This equation requires further explanation. Due to the nature of the function FPC2, adoption of modern methods by diffusion will only take place if the profitability of modern practices significantly exceeds that of traditional methods. Further, the rate of adoption is determined in part by the differential that exists between modern and traditional productivities. The diffusion rate is also a function of:

$$\frac{\text{(Traditional land - land in modernization) x Modern land}}{\text{Total land}}$$

The term in brackets is the land which as yet has not adopted modern practices. Ceteris paribus, one would expect the diffusion rate to be proportional to this variable. Inclusion of modern land as a multiplicative factor is one way of introducing demonstration effects. With no modernized land there is no demonstration effect and no diffusion. As modern land increases, demonstration effects increase

and, certeris paribus, the diffusion rate increases. The total land in the denominator is a normalizing factor. Evidence in support of the validity of this formulation of the diffusion process is the fact that it produces an "s" shaped adoption curve similiar to many that have occurred in reality.

The rate land enters modern production, RLMD, as a result of diffusion is the output of a three stage delay process similiar to that of Equations (M6, M8, and M9):

(M14) R3(t) = R3(t - DT) + DT x (RLMDI(t) - R3(t - DT))/XDEL3

(M15) R4(t) = R4(t - DT) + DT x (R3(t) - R4(t - DT))/XDEL3

(M16) RLMD(t) = RLMD(t - DT) + DT x (R4(t) - RLMD(t))/XDEL3

Where:

R3, R4 = intermediate rates

RLMDI = rate land enters modernization as a result of diffusion - acre/year

RLMD = rate land enters modern production as a result of diffusion - acres/year

XDEL3 = one third of the delay involved in modernization - years

In this case there are no "dropouts" due to a possible shortage of technical assistance (extension agents, etc.). This is due to the fact that technical assistance is available from farmers already using modern methods. On the other hand, the delay inherent in modernization by diffusion will be considerably longer than that of an overt "production campaign."

Given RLMD from Equation (M16) it is possible (and necessary) to compute TRNSLD, the land that is in transition (from traditional to

modern production) as a result of the diffusion process:

(M17) TRNSLD(t + DT) = TRNSLD(t) + DT x (RLMDI(t) - RLMD(t))

It is also important in the model to simulate any "dropouts" that occur if the profitability of modern methods should drop significantly due to declining output prices, increasing input prices, etc. In this case farmers who are using modern methods may fall back to traditional practices. This dropout rate is the product

ZMODL(t) x FPC3(t)

where ZMODL is the total land in modern production and FPC3 is given by Equation (M18).

(M18) FPC3(t) = MAX(E11 x (1 - EXP(- E81 x (E91 - PCA(t)))), 0)

Where:

PCA = the profitability criteria of Equation (M2)

E11, E81, E91 = model parameters

his function is shown in Figure (M2).

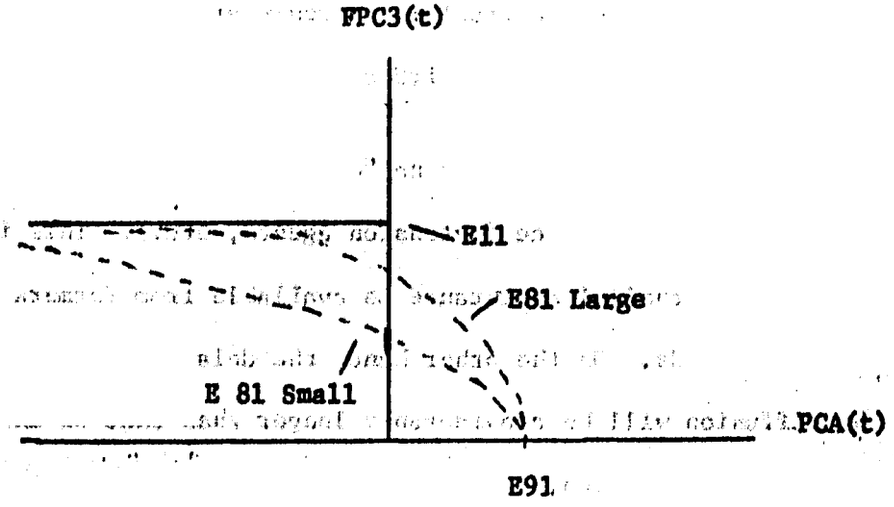

Figure M3

It is clear that if the profitability criteria relating modern returns to traditional returns (PCA) is greater than some threshold value, E91, FPC3 is zero and there are no dropouts from modern production. For smaller values of PCA, FPC3 is some positive number between zero and E11 indicating that some percentage of the modern land reverts to traditional methods annually. Again the model parameters (E91, E81, and E11) can be selected to simulate a range of real world conditions.

Given this dropout rate and the rates land is being modernized by production campaigns and diffusion, it is possible to compute the total modern land ZMODL, which is assumed to produce at modern productivities:

$$\text{(M19)}\quad ZMODL(t + DT) = ZMODL(t) + DT \times (RLMP(t) + RLMD(t) - ZMODL(t) \times FPC3(t) + E6 \times ZMODL(t) \times RALTOT(t)/ALTOT(t))$$

Where:

RLMP = rate land enters modern production from production campaigns - acres/year.

RLMD = rate land enters modern production as a result of diffusion - acres/year.

ZMODL(t) x FPC3(t) = rate land "drops out" of modern production due to low profitability

RALTOT = rate of change of total land in the given commodity.

ALTOT = total land in the given commodity.

E6 = a model parameter that determines the percentage of land entering or leaving the given commodity that enters or leaves modern production.

The inclusion in Equation (M19) of the term involving "RALTOT" requires further discussion. It is clear that over time the total

land allocated by decision makers to a given commodity will change. The question arises--how should these changes be allocated to traditional and modern production? The model formulation permits the user to make a number of assumptions about this through adjustment of the parameter E6. For example, if E6 = 0 the model allocates all increases or decreases in total land to traditional production. If E6 = 1 the model allocates changes in land area to traditional and modern production proportionally according to the percentage each is of total land. Further, if

$$E6 = 1 \qquad RALTOT \geq 0$$
$$E6 = 0 \qquad RALTOT < 0$$

the model allocates net increases in total land proportionally to modern and traditional production and subtracts all decreases from traditional production etc.

To continue with the main stream of the model description, land allocated to traditional production, TRADL, is readily computed as

(M20) TRADL(t) = ALTOT(t) - ZMODL(t)

Where:

ZMODL = land in modern production as computed above.

ALTOT = total land allocated to the commodity in question (an input variable to this component computed by the land allocation component).

In order to compute an average productivity for the given commodity (the primary function of this model component) we compute total output, OTOT, as

(M21) OTOT(t) = PYM x ZMODL(t) + PYT x TRADL(t)

where PYM and PYT are modern and traditional productivities per acre respectively. Average productivity, PYAVG, is simply

(M22) YAVAVG(t) = YOTOT(t)/ALTOT(t)

where:

ALTOT is again total land allocated to the given commodity.

To remaining equations of the modernization component compute demands or the various modernizing inputs:

(M23) DEEX2 (t) = E5(t) x TRNSLE(t)

where:

DEEX2(t) = production campaign demand for technical assistance (measured in extension worker equivalents).

TRNSLE = land in transition due to overt promotion - acres

E5 = extension worker equivalents per acre in transition (provision is made in the model for this requirement to change over time to simulate learning effects etc.)

(M24) DBMAT(t) = E13 x ZMODL + (TRNSLE(t) + TRNSLD(t))/E4

where:

DBMAT = demand for biological materials (seeds etc.) - pounds

E13 = pounds of biological material required per acre of modernized land

E4 = acres/pound of biological material for land in transition from traditional to modern practices.

(M25) DFERT(t) = E141 x TRNSLE(t) + E142TRNSLD(t) + E143 x ZMODL(t) + E144 x TRADL(t)

where:

DFERT = total demand for fertilizer - pounds

E141, E142, E143, E144 = per acre requirements - pounds/acre

(M26) EXTI(t) = E16 x DBMAT(t) + E17 x DFERT(t)

where:

EXTI = man units required to distribute inputs[1]

E16, E17 = man units/unit of bio-material and fertilizer

1/ This variable makes it possible to assess the impact of alternative strategies regarding the use of extension personnel in the distribution of inputs.

(M27) DCRDT(t) = ESB * (TRNSLE(t) + TRNSLD(t)) + ZMODL(t))

where:

ESB = per acre credit requirement defined in Equation (M1)

DCRDT = total demand for credit to sustain modernization working credit and credit for capital investment.

(M28) DINV(t) = CPL x (XR1(t) + R3(t)) + E18 x CAP(t)

where:

DINV = demand for capital investment

CPL = capital requirements per acre (to sustain modern production) - ₤/acre

XR1 = lagged[1] rate land enters modernization process due to production campaigns - acres/year

R3 = lagged[1] rate land enters modernization process due to diffusion effects - acres/year

CAP = total value of existing (modernizing) capital - ₤

E18 = depreciation factor

Assuming that demand for capital inputs is satisfied, the total value of modernization capital for the given commodity is computed as

(M29) CAP(t + DT) = CAP(t) + CPL x XRL(t) + CROUTE3(1))

Finally, the component computes the total cost of non-farm inputs (CNFI) for use elsewhere in the overall model:

(M30) CNFI(t) = PFRT(t) x DFERT(t) + DINV(t)

This concludes description of the major model structural relationships. The component has been programmed, tested and is currently being incorporated into the northern model. The modernization component will be used replicatively once for each commodity in the northern model. Unfortunately, inherent differences between the nature and economics of annual and perrenial

---

1/ The lag here accounts for the fact that demand for capital equipment will lag the decision to adopt modern methods (See Equations M7 and M14).

production preclude the possibility of directly using this component in modeling the southern tree crop economy. Tests of this model have led to informative insights into the interrelationships between overt efforts to stimulate modernization (production campaigns etc.) and spontaneous diffusion-processes. It is quite clear that under favorable conditions (profitability and availability of modernizing inputs) a burst of overt promotion can provide a "trigger" for a spontaneous diffusion process. We hope that the available data will enable us to use the model to explore the impact of alternative promotion strategies upon diffusion effects and overall productivity.

The Population Component

The purpose of the population component of the simulation model of the agricultural sector of the Northern Region of Nigeria is to provide a demand for subsistence calories in each of the four crop areas, a demand for food staples through the cash market from the segment of the population which is not employed in agriculture, and to provide a supply of labor for the agricultural sector.

The population of Northern Nigeria is divided along three dimensions into 162 cells or cohorts. These three dimensions are: occupation (agriculture, non-agriculture, and unemployed), sex (male and female), and age group (twenty-seven three-year age groups.) The initial data arrays entered into the computer program distribute the population along two of the dimensions, age and sex. Two additional arrays, TLF and AGR, are used to distribute the population into the three different occupational categories. The number of people employed in agriculture in each age-sex cohort in the North is given by:

(POP1) $POP(t)_{kage,jsex,agric} = POP(t)_{kage,jsex} * TLF_{kage,jsex} * AGR(t)_{kage,jsex}$

where:

$POP(t)_{kage,jsex,agric}$ = the number of persons employed in agriculture in a given age-sex cohort

$POP(t)_{kage,jsex}$ = the total number of persons in a given age-sex cohort

$TLF_{kage,jsex}$ = the fraction of persons in a given age-sex cohort employed in the labor force

$AGR(t)_{kage,jsex}$ = fraction of the labor force in a given age-sex cohort employed in agriculture.

The number employed in non-agricultural occupations is given by:

(POP2) $POP(t)_{kage,jsex,nonag} = POP(t)_{kage,jsex} * TLF_{kage,jsex} - POP(t)_{kage,jsex,ag}$

The number of persons unemployed, mostly children and older persons, is:

$$\text{(POP3)} \quad POP(t)_{kage,jsex,unemp} = POP(t)_{kage,jsex} - POP(t)_{kage,jsex,agric} - POP_{kage,jsex,nonag}$$

The number of equivalent man-units of labor employed in the agricultural sector at a given time t is:

$$\text{(POP4)} \quad AGMU(t) = \sum_{kage=1}^{27} \sum_{jsex=1}^{2} EQVDAY_{kage,jsex} * EQVMAN_{kage,jsex} * POP(t)_{kage,jsex,agric}$$

where:

AGMU(t) = man-units of labor employed in the agricultural sector at time t

$EQVDAY_{kage,jsex}$ = fraction of a reference man-day worked by a laborer in an age-sex cohort

$EQVMAN_{kage,jsex}$ = fraction of a reference man's physical energy expended by a laborer in an age-sex cohort.

The above relationship takes into account that different persons, depending on their sex and age, have different amounts of time and physical energy to devote to agricultural labor. For example, children, women, and older persons contribute fewer effective man-units of labor than a reference man between the ages of 21 and 40. The man-units of labor in the agricultural sector are distributed among the four crop areas of the Northern Region as follows:

$$\text{(POP5)} \quad LABA_{karea}(t) = DLABOR_{karea} * AGMU(t)$$

where:

$LABA(t)_{karea}$ = available man-units of agricultural labor in each of the crop areas in the northern region.

$DLABOR_{karea}$ = fraction of the total agricultural labor force located in each of the crop areas, assuming uniform age-sex distribution and no interarea migrations

The available labor in each of the crop areas of the Northern Region is an output from the population component.

In order to determine the demand for subsistence calories as well as the demand for food staples flowing through the cash market, it is necessary to divide the population into a farm population and a non-farm population. Note that this is a slightly different distinction than a division of the population into rural and urban. There is likely to be a smaller percentage of the population actually living on farms and growing their own food than the percentage of the population which might be classified as rural depending on the size of the population center in which they live. The division into a farm and non-farm population is made on the basis of the number of males employed in agriculture and the number of males employed in non-agricultural occupations.

POP6) $TPOPAG(t) = TPOPR(t) * [TOTOCC(t)_{male,agric} / (TOTOCC(t)_{male,agric} + TOTOCC(t)_{male,nonag})]$

where:

$TPOPAG(t)$ = total population living on farms in the Northern Region

$TPOPR(t)$ = total population in the Northern Region

$TOTOCC(t)_{male,agric}$ = total number of males employed in agriculture

$TOTOCC(t)_{male,nonag}$ = total number of males employed in agricultural occupations

The remaining population (the non-farm sector) of the Northern Region is given by:

(POP7) $TPOPNA(t) = TPOPR(t) - TPOPAG(t)$

where:

$TPOPNA(t)$ = total non-farm population in the Northern Region.

The demand for subsistence calories in each of the crop areas is considered to be proportional to the distribution of the labor force across each of the areas.

(POP8) $DEMR(t)_{karea} = [DLABOR_{karea,agric} * TPOPAG(t) * CALPP]/[1.0 - SPOIL]$

where:

$DEMR(t)_{karea}$ = demand rate for subsistence calories per year in each crop area

CALPP = average per capita calories required per year

SPOIL = percent of subsistence food which spoils between the field and the table.

$DLABOR_{karea,agric}$ = fraction of the total agricultural labor force located in each of the crop areas, assuming the agricultural population and farm population have the same distribution among crop areas.

DEMR is an output variable from the population component.

The demand for cash food (staples) in the Northern Region is a function of the total non-farm population, the average price per pound of food staples, and the average per capita income:

(POP9) $DEMCFN(t) = TPOPNA(t) * \exp[ELASFC + ELASFP * \log_e PFN(t) + ELASFY * \log_e(YNFN(t)/TPOPNA(t))]$

where:

DEMCFN(t) = demand for food staples, calories per year

ELASFC = empirical constant

ELASFP = empirically determined price elasticity

PFN(t) = average price of food staples, pounds sterling per pound

ELASFY = empirically determined income elasticity

YNFN(t) = total income earned by the non-farm population, pounds sterling per year.

Equation (POP9) is a transformed version of the standard log-log form of demand equation expressed as a function of price and income. DEMCFN is an output variable from the population component.

The updating mechanism for the population component operates on two different cycles: a major cycle DTY of three years and a minor cycle DT equal to the time increment utilized by the rest of the model (currently 0.25 years). The reason for having a major cycle of three years in the population component is that the population is divided into 27 age groups of three years each. Thus, the population may be shifted between the age cohorts only once every three years.

In the current version the birth rates, $BIRTHR_{kage}$, are assumed to remain constant during the duration of the simulation, i.e. it is assumed that there is no effective birth control program and that the country has not yet entered the period in which birth rates begin to fall naturally. On the other hand, the death rates, $DEATHR_{kage,jsex}$, and the infant mortality rate, INMOR, are assumed to be declining during the duration of a simulation run as a result of the introduction of improved health practices. The decline in the infant mortality rate is computed as:

(POP10) $INMOR(tm) = INMOR(tm-DTY) * (1.0 - DECINM)^{DTY}$

where:

tm = average time during major cycle time period, t + (DTY/2)

INMOR(tm) = average infant mortality rate during the major cycle of DTY years

DECINM = fractional decline per year in the infant mortality rate

DTY = major cycle of three years

The decline in death rates is computed as follows:

(POP11) $DEATHR(tm)_{kage,jsex} = DEATHR(tm-DTY)_{kage,jsex} * (1.0-DECDTH)^{DTY}$

where:

$DEATHR(tm)_{kage,jsex}$ = age-sex-specific death rates

DECDTH = fractional decline per year in the age-sex-specific death rates.

The next step in the population updating mechanism is to delete the decedents from each age-sex cohort and shift the remaining population into the next older age-sex cohort:

(POP12) $POP(t+DTY)_{kage,jsex} = POP(t)_{kage-1,jsex} *$

$(1.0 - DEATHR(tm)_{kage-1,jsex})^{DTY}$

The number of males who enter the youngest age cohort is a function of the total number of births, the infant mortality rate, and the sex ratio at birth:

(POP13) $POP(t+DTY)_{kage=1,male} = TBIRTH(tm) * (1.0 - INMOR(tm)) *$

$[SRATIO/(1.0 + SRATIO)]$

where:

TBIRTH(tm) = total number of births during the major time cycle (see Equation POP15)

SRATIO = the number of males born per female born

The number of females who enter the youngest age cohort is given by:

(POP14) $POP(t+DTY)_{kage=1,female} = TBIRTH(tm) * (1.0 - INMOR(tm)) *$

$[1.0/(1.0 + SRATIO)]$

The total number of births during a major time cycle is:

(POP15) $TBIRTH(tm) = \sum_{kage=1}^{27} POP(t)_{kage,female} * BIRTHR(tm)_{kage} * DTY$

Although Equations POP5, POP6, and POP7 are correct conceptually, in

the computational procedure of the simulation model the number of man-units of labor employed in the agricultural sector, AGMU(t), the total farm population, TPOPAG(t), and the total non-farm population, TPOPNA(t), are computed by these equations only at the beginning and the end of each major cycle. These two values for each variable are then used to calculate a rate of change of that variable:

(POP16) RAGMU(tm) = [AGMU(t+DTY) - AGMU(t)]/DTY

(POP17) RTPAG(tm) = [TPOPAG(t+DTY) - TPOPAG(t)]/DTY

(POP18) RTPNA(tm) = [TPOPNA(t+DTY) - TPOPNA(t)]/DTY

where:

RAGMU(tm) = rate of change of man-units of agricultural labor during major time cycle tm

RTPAG(tm) = rate of change of the total farm population during major time cycle tm

RTPNA(tm) = rate of change of the total non-farm population during major time cycle tm

Thus, the values of AGMU(t), TPOPAG(t), and TPOPNA(t) as used in equations POP5, POP8, and POP9 are computed each time increment DT by the following equations:

(POP19) AGMU(t) = AGMU(t-DT) + RAGMU(tm) * DT

(POP20) TPOPAG(t) = TPOPAG(t-DT) + RTPAG(tm) * DT

(POP21) TPOPNA(t) = TPOPNA(t-DT) + RTPNA(tm) * DT

where:

DT = the time increment used in the overall simulation model

A more detailed description of the population component is found in the Fortran sub-routines in the Appendix.

The first group of variables and parameters which had to be estimated for the processing of the population component were the basic demographic variables: the age-sex distribution, the age-specific birth and death rates, sex ratio at birth, and the rate of decline in the death rates (it was assumed that birth rates have remained relatively constant). The best available source of demographic data on Nigeria at the simulation starting time was the 1953 Census of Nigeria. However, this census had several deficiencies in terms of our purposes. There is general agreement among demographers that the census was underreported by approximately 10 percent. The age distribution breakdown in 0-1, 2-6, 7-14, 15-49, and 50+ age groups showed too many people in the large 15-49 age group. These age groupings and the biased distribution made it difficult to construct a reliable age distribution of the Nigerian population. Finally, the 1953 Census did not provide data on age-specific birth and death rates. For these reasons a published analysis of demographic data for Dahomey was used as a guide in arriving at reasonable figures for Nigeria.[1] The Dahomey demographic data verecollected by a 1/18 sample survey conducted in 1961.

The age-sex distribution curves for Nigeria were estimated by distributing the total population of Nigeria (arrived at by increasing the figure reported in the 1953 Census by 10 percent) according to the age-sex distributions found in Dahomey. This approach seemed reasonable because the percentage distributions across age groups appear to be fairly similar for different African populations.

---

[1]Brass, et al., The Demography of Tropical Africa, Princeton University Press, 1968.

Age-specific death rates for the northern region were also derived from death rates for Dahomey, although they were ratioed down to yield a crude death rate of about 26 per thousand instead of 33 per thousand as found in Dahomey. This was done to yield an overall growth rate of 2.0-2.5 percent which has been estimated for Nigeria by the Okonju, Ferguson, and others. Furthermore, in light of the probably more advanced state of development of Nigeria even in 1953 over that of Dahomey in 1961, a lower death rate is justified. The decline in death rates for the period of the simulation runs was arbitrarily estimated to be 1.7 percent per year and the decline in infant mortality rates to be about 1 percent per year.

Age-specific birth rates, which were assumed to remain constant throughout the simulation run, were based on birth rates for Dahomey which had been estimated by an analysis of survey data on births during the previous year and on children never born to women of child-bearing age. Birth rates were increased 12.5 percent to raise the rate of natural increase to produce enough births to maintain a smooth age-sex distribution curve over a nine-year trial simulation period.

Based on these adjusted figures from Dahomey, the total Nigerian population grew from 34,233,000 in 1953 to 43,635,370 in 1962 at an annual rate of 2.4 percent in the North and 2.7 percent in the South. This figure for the 1962 population is close to the estimates of Okonju, Ferguson and others.

The second group of parameters to be estimated included those dealing with the labor force. The age-sex specific distribution of the proportion of people in each cohort working in the labor force, $TLF_{kage,jsex}$, and the proportion of the labor force in each cohort working in the agriculture $AGR_{kage,jsex}$ determined by an analysis of both the 1953 Census and the 1963 Census. The proportion of time worked by laborers in each cohort, $EQVDAY_{kage,jsex}$, as compared to a reference man between the ages of 18 and 45 and the amount of

physical energy expended $EQVMAN_{kage,jsex}$, as compared to a reference man between 21 and 39 were rather arbitrarily estimated. For example, it was assumed that a woman of age 30 in the labor force would be able to devote approximately 80 percent as much time to her work as a reference man and that she would expend about 87.5 percent of the physical energy expended by a reference man.

The geographical distribution of labor across the crop areas, $DLABOR_{karea,joccup}$, was based on data reported in the 1953 Census and the 1963 census.

Rural-urban migration was arbitrarily estimated to be .750 percent per year for men and .375 percent per year for women.

The third group of parameters included those required for the food demand equations. The elasticities used in the log-log cash food demand equation were estimated by means of a regression analysis of data reported from urban consumer surveys conducted in seven urban areas between 1959 and 1966 and from food price data reported in the Annual Abstract of Statistics Nigeria, 1966. The income elasticity for food staples was found to be 0.33 and the price elasticity was found to be -0.96 (this value may be somewhat high). The constant term in the demand equation ELASFC was adjusted to make the quantity demanded consistent with the population level, the food price index, and the income levels utilized in the simulation model. The daily subsistence requirement for food staples CALPP was estimated to be about 1900 calories per person per day. This figure was based on the age distribution of the population and on data published by the Food and Nutrition Board of the U.S. National Academy of Sciences in 1968. The spoilage rate of subsistence food was arbitrarily estimated at 13 percent.

Changes in the Northern Nigeria Beef Industry Model Since the Progress Report to A.I.D. Dated April 26, 1968

In general, the changes of the beef model may be classified as: (1) parameter changes due to newly acquired information (2) parameter changes to achieve internal consistency (3) equation changes to more closely approximate reality (4) new equations added to provide more detail (5) addition of the beef transportation and distribution components.

In the fall of 1968, Mr. Laybourne Larson, former U.S.A.I.D. Livestock Advisor in Nigeria, was consulted in an attempt to make the beef model more realistic. Many of the changes made were a result of discussions with him.

The T.D.N. yields of the grass in modern grazing reserves and animal feed crops (C9 and C10) were increased to 500 pounds per acre and 3,700 pounds per acre respectively. These parameters appear in equations (211) and(212) respectively.

Since the beef production model is now integrated with the northern cropping model, T.D.N. yields from food and cash crops are now endogenous variables. The parameters are the same as those in equation (208) in the April, 1968 progress report.

The death rate functions for the traditional and modern herds have been increased and lowered respectively as shown below.

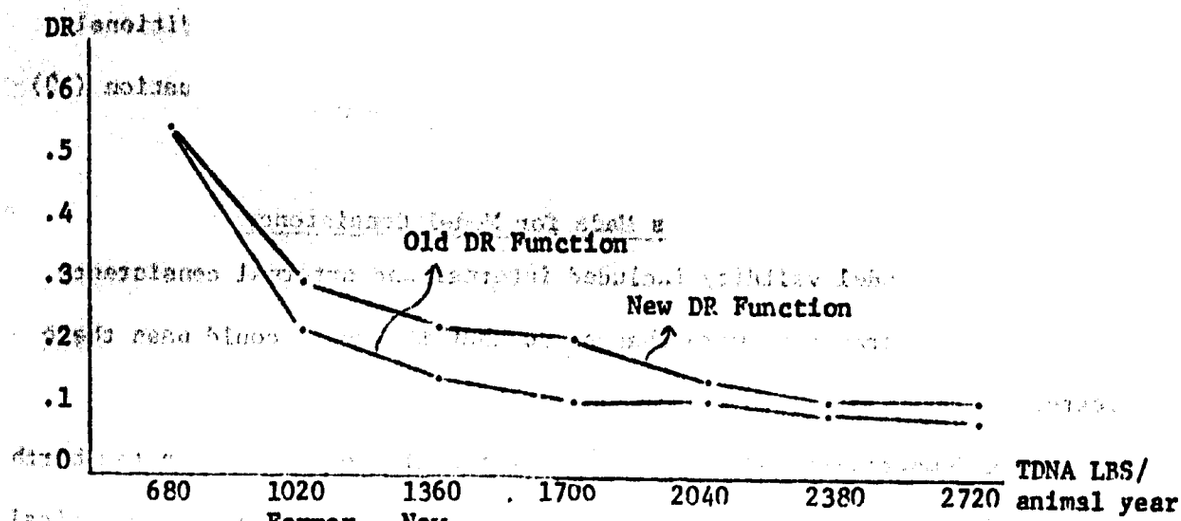

	Former	New
VAL3 (1)	.55	.55
VAL3 (2)	.22	.3
VAL3 (3)	.13	.22
VAL3 (4)	.11	.2
VAL3 (5)	.10	.14
VAL3 (6)	.09	.1
VAL3 (7)	.08	.1

TRADITIONAL DEATH RATE VS. TDNA

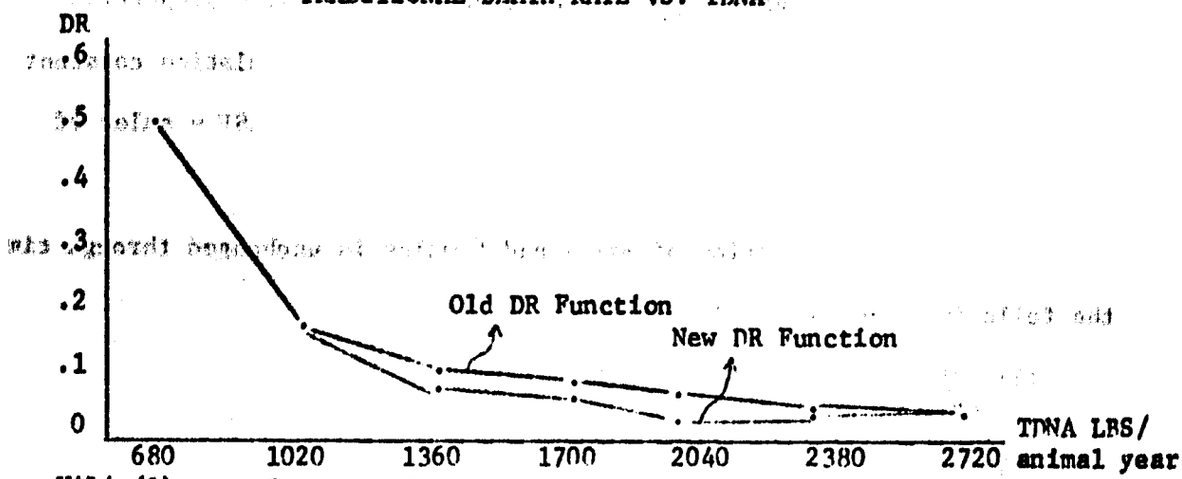

	Former	New
VAL4 (1)	.5	.5
VAL4 (2)	.17	.17
VAL4 (3)	.10	.08
VAL4 (4)	.08	.06
VAL4 (5)	.07	.05
VAL4 (6)	.06	.05
VAL4 (7)	.05	.05

MODERN DEATH RATE VS. TDNA

These new functions are in equation (2) in the demography sub-routine.

The proportion of all females lactating in the traditional herd was changed from .65 to .5. This parameter appears in equation (20) of the demography sub-routine.

Parameter Changes Made for Model Consistency

Tests of model validity included internal and external consistency checks. Some parameters were changed so that the model could pass these tests.

In a demographic model, certain relationships exist between the birth rates, death rates, sales rates, sex ratios, sales sex ratios, theoretical extraction rates, actual extraction rates and herd size growth. In the following development of internal consistency checks, these definitions are used: BR = proportion of total females calving; DRM,DRF = proportion of males that die and proportion of females that die respectively; SR = Population of males divided by population of females; ERT = proportion of the total herd that may be sold, keeping the total population constant; PM,PF = population of males and females, respectively, SM,SF = sales of males and females, respectively.

Assuming the population of males and females is unchanged through time, the following equations hold.

(1) $\frac{dPF}{dt} = BR/2 * PF - DRF * PF - SF = 0$

(2) $\frac{dPM}{dt} = BR/2 * PF - DRM * PM - SM = 0$

The extraction ration is defined as:

(3) $ER = \frac{SM + SF}{PF + PM}$

Solving for SM and SF in equations (1) and (2) and substituting into (3) gives:

$$(4)\quad ER = \frac{BR/2 * PF - DRF * PF + BR/2 * PF - DRM * PM}{PF + PM}$$

This reduces to:

$$(5)\quad ER = \frac{BR * PF - DRF * PF - DRM * PM}{PF + PM}$$

dividing by PF gives:

$$(6)\quad ER = \frac{BR - DRF - DRM * SR}{1 + SR}$$

This is the equation of the theoretical extraction ratio that can be compared with the extraction ratio that is calculated by the program. If the herd size is increasing, the extraction ratio of the model should be lower than the theoretical one. Conversely, if the herd size is decreasing, the model extraction ratio should be higher than the theoretical one.

Another test was developed to check the consistency of the sex ratio of sales with assumed birth rates, death rates for males and females and the sex ratio. The sales sex ratio is defined as $\frac{SM}{SF + SM}$. Solving equations (1) and (2) for SM and SF and substituting gives:

$$(7)\quad \text{Sales sex ratio} = \frac{\frac{BR}{2} * PF - DRM * PM}{\frac{BR}{2} * PF - DRF * PF + \frac{BR}{2} * PF - DRM * PM}$$

dividing by PF gives:

$$(8)\quad \text{Sales sex ratio} = \frac{\frac{BR}{2} - DRM * SR}{\frac{BR}{2} - DRF + \frac{BR}{2} - DRM * SR}$$

Simplifying the denominator yields

$$(9)\quad \text{Sales sex ratio} = \frac{\frac{BR}{2} - DRM * SR}{BR - DRF - DRM * SR}$$

Checking equations (6) and (9) with the data given by others indicated that the death rate for females was higher than the death rate of males. This seems reasonable as the age distribution of the females is older and they encounter more stress from calving and nursing calves than the males.

Therefore, the death rate for females was changed to 1.7 times the death rate of males.

Equation Changes

Total cropland (which expands at the expense of grazing land in Northern Nigeria) is now computed by the crop sectors of the northern model. In the earlier beef model expansion of crop land was an exogenous model variable. Total crop land and the grazing land residual are now computed as follows:

FFLND = TL(1) + TL(2) + TL(3)

where:

FLND = Total crop land in the normally fly full region of Northern Nigeria

TL(1), TL(2), TL(3) = respectively total crop land in the groundnut-food, cotton-food and groundnut-cotton-food zones.

LG = LGO - FFLND

where:

LG = total fly full grazing land

LGO = total fly full grazing land at the beginning of a simulation run

The rate that animals are added to the modern grazing reserves is a function of the rate of increase of their traditional nutrition levels and the difference between the acheived nutrition level and the desired one. Equation (1972) computes this.

(1972) RAA = RTDN * C16 + C36 * (TDNAM - TDNAD)

where:

RAA = Rate animals are added to the modern sector (K animals/year)

RTDN = Rate of increase of TDN (K pounds/year^2)

C16 = The reciprocal of the TDN required per animal year under "modern" nutritional standards (K animal years/Kpounds TDN)

C36 = a model parameter that determines the influence which the difference between the acheived nutrition level and the desired nutrition level in the modern sector has on the rate animals are added to the modern sector.

TDNAM = pounds of TDN per animal in the modern sector

TDNAD = desired TDN level per animal in the modern sector.

Equations (2181) and (2182) compute the income desired from cattle in the traditional and modern sectors respectively.

(2181) YAT = SUPT * PA + PAD * (DMT + DFT)

(2182) YAM = SUPM * PA + PAD * (DMM + DFM)

where:

YAT = income derived from cattle in the traditional sector

SUPT = number of cattle sold in traditional sector

PA = Price of cattle in $'s per animal

PAD = Value received for dead animals--mostly hide sales.

DMT = number ofmales that died

DFT = number of females that died.

The total income derived from the beef industry is the addition of the traditional herd income and the modern herd income. Equation (219) reflects this.

(219) YA = YAT + YAM

where:

YA = Income derived from the beef industry

Equations Added

Two equations were added to the program to check for consistency with data collected by others. The birth rates, death rates for males and females, sales rates, sex ratios, population, and age at maturity or sale must be consistent. Equations (2163) and 2164) calculate the approximate time to maturity implied by the parameters of the model.

(2163) TMM = 2 *SRM/(BRM - 2 *DRM * SRM)

(2164) TFM = 2/(BRM - 2 * DRM)

where:

TMM, TFM = time to maturity for males and females respectively

SRM = sex ratio (number of males/number of females)

BRM = birth rate as a proportion of <u>all</u> females

DRM = death rate

The times to maturity estimated by equations (2163) and (2164) generally correspond to estimates made by others.

Preliminary Tests of the Northern Model

The major components of the system were modeled, simulated and tested individually as part of the overall model building process. During these tests, conceptual and programming errors were detected and corrected until the component appeared credible and ready for inclusion in larger models. The components were then integrated into the Northern regional model shown in Figure (3). Extensive model tests were continued within the context of the larger model to eliminate programming errors and inconsistencies between related model components. This refinement process led to a model which was deemed ready for preliminary comparison with time series data generated by the Northern Nigerian economy.

These initial comparisons served a number of purposes:

a. They led to additional conceptual changes in the model which made it behave more realistically.

b. They provided information indicating which model parameters were most important in influencing the ability of the model to track past behavior of the Northern Nigerian agricultural economy.

c. They helped identify the model parameters which have the greatest impact on the performance of the economy as measured by such variables as income, foreign exchange earnings, value added, and so forth.

The information produced by these tests will provide guidance in determing priorities for future data gathering activities. These tests should also suggest which "uncertain" parameters might be varied in any further attempt to make the model behave more realistically. These preliminary comparisons with recent Northern Nigeria time series data are described below.

Essentially the model (which at this time contains only "ballpark" parameter estimates for the most part) was given farmer prices for groundnuts and cotton over the period 1953-1965. Since these prices were determined largely by world prices and/or marketing board policies, they can be considered exogenously determined. The model then simulated this 13-year period, generating annual groundnut production, cotton production and an aggregate cash food price index for Northern Nigeria. The sum-of-squared errors between the simulated data and actual data was then calculated and aggregated. The following equations define this measure of model performance:

$$TSS = TSS_G + TSS_C + TSS_F$$

where:

TSS = total sum of squared deviations of the model from actual data.

TSS_G, TSS_C, TSS_F = total sum of squared deviations of groundnut, cotton and food series, respectively.

The individual squared deviations, TSS_G, TSS_C AND TSS_F are computed as follows:

$$TSS_i = \sum_{j=1}^{13} \left[\frac{X_{ij} - \hat{X}_{ij}}{\bar{X}_i} \right]^2$$

where:

X_{ij} = real world observation in year j.

$\bar{X}_i = \sum_{j=1}^{13} \frac{X_{ij}}{13}$ — mean of real world observations.

$\hat{X}_{ij}$ = the simulated value of the ith time series in year j.

Division by the mean $\bar{X}_i$ in this equation normalized the errors of each time series so they carry approximately equal weight in the overall measure of fit, TSS.

Given the performance measure TSS, the model was further refined and "uncertain" parameters were adjusted within the likely range of actual values until it coarsely tracked real world data and produced a "respectable"[1] value for TSS. It was disturbing during these tests to note that the model could be made to look "respectable" in a number of different ways--some of them clearly unrealistic. This is due to the fact that insufficient real world time series are available at the present time for comparison with the model. The model was finally coarsely tuned on the basis of the most reasonable and consistent set of underlying assumptions. Using the results of this procedure as a "base" run, a series of "sensitivity" runs of the model were made in which individual model parameters were varied by 20% and the impact on TSS and other criteria such as regional income, foreign exchange, etc., were computed. Some of the more important results of these sensitivity runs are shown in Table I.

The first run in Table I provides a standard against which subsequent runs can be evaluated. In runs (2-17) the parameter listed in column 2 (and only that parameter) is changed by 20% and the impact upon measures of system behavior noted. In addition to a tabulation of values of TSS, TSS_F, TSS_C and TSS_G which are measures of how well the model fits data from the Northern Nigerian economy, Table I includes a number of economic measures which provide an indication of how important variations in any given parameter are in determing the performance of the economy. These are defined as follows:

CFICNA = Cash farm income from crops in Northern Nigeria accumulated over a 20-year simulation run--Billions of Nigerian pounds.

1/ As seen from the defining equation, perfect tracking would correspond to a TSS value of zero. If the model produced zero outputs, TSS would be approximately 39.

FOREXNA = Foreign exchange earning from crops and beef in Northern Nigeria accumulated over a 20-year simulation run--Millions of pounds.

CFIPC = Cash farm income per person in the rural economy of Northern Nigeria--£/person.

In all 16 separate parameters are tested for sensitivity in Table I. These are defined as follws:

PLO_1 = Cultivated acres per equivalent man unit in region 1 (groundnut-food) with traditional mechanization and normal prices.

$APLO_2$ = Same as above for region 2 (cotton-food).

EAP(1) = Percent of rural population that is economically active in region 1 (groundnut-food) at the beginning of the simulation run. (1953)

EAP(2) = Percent of rural population that is economically active in region 2 (cotton-food) at the beginning of the simulation run (1953)

B(1,1) = Profitability elasticity (see Equation (11)) for groundnuts when profitability index (PF_1) is greater than one.

B(1,4) = Profitability elasticity (Equation (11)) for food in region 4 when profitability index (PF_4) is greater than one.

B(2,1) = Profitability elasticity (Equation (11)) for groundnuts when profitability index (PF_1) is less than one.

CL7(1) = a parameter that determines the rate of change of the economically active population in region 1 (groundnut-food).

CL7(2) = A parameter that determines the rate of change of the economically active population in region 2 (cotton-food).

CL7(4) = A parameter that determines the rate of change of the economically active population in region 4 (food only).

CL5 = A parameter that controls the rate of food price adjustment in response to differences between supply and demand--Equation (L25).

CM(4) = Mechanization coefficient in region 4--the ratio of "effective" to actual labor force.

Pf(1), P4(2), P4(3), Pf(4) = The productivities in yield per acre in the farm sub-regions of the northern model.

The runs tabulated are by no means exhaustive--much more of this kind of testing remains to be done. The runs shown illustrate what can be learned from sensitivity analysis.

From runs (2-5) it is seen that variables such as acres cultivated per unit of labor and indicies of economic activity are quite important in determining the performance of the model. This suggests that effort directed at obtaining better estimates of these parameters might substantially improve model accuracy. In fact, comparison of runs (2-5) with runs (6-8) suggests that these parameters might be more important in determining system behavior than parameters which measure the impact of prices upon subsequent enterprise selection decisions.

Runs 9-11 test the impact of the parameters which determine the rates of change in the "economically-active" population in the Northern sub-regions. These parameters are seen to have some impact upon model performance but less than might have been expected.

In run 12, the food price adjustment parameter CL5 was examined for sensitivity and found to have a relatively weak influence upon model behavior. This suggests that high precision may not be necessary here and that data gathering efforts might be more profitably directed elsewhere.

In run 13, it was assumed that farmers in the sub-region specializing in food adopted mechanization which effectively increased labor productivity 20%. This resulted in lower food prices to the consumer but tended to reduce farm income slightly under current behavioral assumptions.

Perhaps the most interesting simulation results contained in the table are those of runs 14-17. In these runs, it was assumed that yields per acre

were increased by 20% for each of the four major cropping activities of Northern Nigeria. Run 14 with increased groundnut yield showed significant increases in foreign exchange earnings and farm income. In run 15, the impact of a corresponding increase in cotton yield was less significant due to the smaller scale of cotton production.

In run 16, a 20% increase in the yield of food (mainly grains) grown in competition with groundnuts and cotton was postulated. The impact on foreign exchange earnings and farm income was greater than when either groundnut or cotton yields were increased by the same proportion. The increased food yields allowed farmers to release land and labor from food crops. Hence, the acreage and outputs of groundnuts and cotton increased more than the previously cited case due to the very large acreage of food crops in the sub-regions. These results focus attention on an important question: Should extension and research programs give more emphasis to food crops grown in competition with crops such as groundnuts and cotton? Much current thinking seems to be aiming these resources directly at the export and import substitute commodities.

In run 17, the yield of food in the food-only zone was increased by 20% as in run 13, food prices were lowered and the impact on farm income and exchange earnings was neutral.

The tests described above represent a beginning; but much more testing is planned for the Northern model, including activation of the modernization components and exploration of alternative budget allocations.

TABLE I: SELECTED RESULTS OF NORTHERN MODEL SENSITIVITY TESTS

(1) Run #	(2) Run Description	(3) Base Value of Varied Parameter	(4) £ x 10^9 CFICNA	(5) £ x 10^6 FOREXNA	(6) £ CFIPC	(7) TSS	(8) TSS_F	(9) TSS_G	(10) TSS_C
1	Base Run		1.890	9.228	8.29	1.887	.200	.828	.859
2	$APLO_1$ ↑ by 20%	6.0	2.026	172.7	8.57	4.896	.200	3.837	.859
3	$APLO_2$ ↑ by 20%	6.0	1.945	87.00	8.44	7.463	.200	.827	6.436
4	EAP(1) ↑ by 20%	.750	1.922	45.42	8.32	2.369	.200	1.309	.859
5	EAP(2) ↑ by 20%	.5	1.895	15.29	8.29	2.122	.200	.828	1.095
6	B(1,1) ↑ by 20%	1	1.890	9.228	8.29	1.887	.200	.828	.859
7	B(1,4) ↑ by 20%	1	1.891	9.309	8.29	1.872	.185	.828	.860
8	B(2,1) ↑ by 20%	.5	1.886	3.189	8.26	1.893	.200	.834	.859
9	CL7(1) ↑ by 20$	.05	1.894	14.26	8.30	1.904	.200	.844	.859
10	CL7(2) ↑ by 20%	.1	1.895	15.14	8.29	2.085	.200	.828	1.057
11	CL7(4) ↑ by 20%	.03	1.891	9.293	8.28	1.874	.1864	.828	.859
12	CL5 ↑ by 20%	1	1.893	9.179	8.28	1.892	.206	.828	.858
13	CL(4) ↑ by 20%	1	1.888	11.010	8.26	2.045	.328	.828	.889
14	PY(1) ↑ by 20%	700 #/acre	1.[illegible]89	130.3	8.51	3.699	.200	2.639	.859
15	PY(2) ↑ by 20%	260 #/acre	1.921	52.72	8.37	4.438	.200	.828	3.410
16	PY(3) ↑ by 20%	700 #/acre	2.007	156.7	8.54	5.452	.200	2.428	2.825
17	PY(4) ↑ by 20%	5320 #/acre	1.890	8.386	8.25	1.949	.248	.828	.874

PART III

An Initial Conception of a Southern Region Crop Sector

Simulation of the tree crop economy in the South (defined as the former Western, Mid-Western and Eastern Regions) is handled as follows:

The South is divided into four crop sectors roughly determined by climatic and soil conditions (see Figure 1). Sector 1 is the area in which cocoa can be grown and hence competes with food and oil palm for land and labor. This sector covers all of the Western Region (except Colony Province and Egbado, Oyo and Okitipupa Divisions) and Afenmai Division of the Mid-West.

Sector 2 is composed of the area in which oil palm alone competes, or could compete, with food for inputs. This includes all of the Eastern Region with the exception of the following divisions: Brass, Degema, Nsukka, Udi, Abakaliki, Ogoja, Obudu and Ikom.

The Mid-Western Region minus Afenmai and Western Ijaw Divisions comprises Sector 3, where oil palm, rubber and food all compete for resources.

The remainder, including Lagos, those parts of the West not in Sector 1, those parts of the East not in Sector 2 and Western Ijaw Division of the Mid-West, comprise Sector 4, the areas where only food can be economically farmed.

At present, work is progressing on the development of a computer simulation model of Sector 1, the Cocoa-Food (or simply Cocoa) Sector. It must be remembered that the model described here is constantly being revised in successive iterations of the modeling process. Therefore, this paper should be considered only an exposition of preliminary ideas and assumptions. Our aim is to have a model general enough to be applicable to all four crop sectors, yet specific enough to be meaningful in each.

The Model Structure

Very broadly, the model accounts for seven present uses, or streams, of the available land in the Cocoa Sector and then simulates, over time, transitions from one use to another, the rates of transition being determined by economic and cultural considerations. The amount of land in each use is then used to calculate the production outputs as well as the demand for various inputs: namely, biological, chemical, labor extension and finance.

The seven categories, or streams of land use in the Cocoa Sector are as follows:

1) Traditional--land in Amelonado trees farmed under traditional methods;
2) Improved--land in Amelonado trees managed and cultivated with modern techniques and inputs.
3) Replanted--land in Upper Amazon trees using modern methods of management and cultivation, planted on land formerly in Amelonado trees;
4) Newly planted--same as 3, except on land formerly in the food-fallow rotation or in virgin forest;
5) Food-Fallow--land in the food-fallow rotation;
6) Forest--virgin bush and forest.
7) Oil Palm--transitional "bush" oil palm

We do not suppose these seven streams to be exhaustive. Not covered here, for example, are forest reserves and towns. Those included are, however, the most meaningful for the purposes of this model.

Each of these land uses--let's call them "present uses"--has one or more alternative uses to which the land can be transferred. In the interests of economy, we do not necessarily consider every conceivable alternative to

a present use, but rather we restrict the list to those which are both realistic and significant. For example, we assume a farmer, once having adopted techniques of improved managerial control of his Amelonado trees, will not revert to traditional methods. Thus, transitions from the improved stream to the traditional stream, while conceivable and perhaps even likely, are not considered.

Regarding the streams of replanted and newly planted trees, we make the assumption that a farmer's planting of Upper Amazon cocoa trees implies his concurrent adoption of modern methods of management and cultivation. In this way, Upper Amazon cocoa production is a "modern" production, agriculturally as well as biologically.

Before discussing each stream and its alternatives in detail, I wish to point out an important feature of the model. One of the policy alternatives available to the government of Nigeria is to allow private enterprise to supply modern inputs (as well as credit) to the agricultural sector in coordination with the government's production campaigns. Such a policy would save the government not only the cost of the inputs themselves (seedlings, sprays, extension agents, etc.) but also the administrative and manpower costs of supplying and distributing those factors. Hence, different simulation runs of the model can show the results of government supplied inputs versus those of privately supplied inputs.

1. Traditional

The Traditional stream is divided into four productivity cohorts, each represented in the model by an exponential delay. The first includes the acreage of seedlings and young trees in the gestation period (no yield). This cohort has a delay of six years. The next delay (eight years) represents the cohort of trees approaching maturity (rising productivity).

Third, we have the mature trees (maximum yield) with a delay of twelve years: and, finally, there are the old trees whose productivity is declining (a delay of fourteen years).

The alternatives considered open to a farmer holding acreages in any of these groups are five in number. He can increase the yield of his trees by applying techniques of improved managerial control,or he can remove his Amelonado trees and replant with the Upper Amazon strain, at the same time adopting the modern management and cultivational techniques. Thirdly, a farmer could enter his land into modern oil palm production. Finally, the traditional trees can be cleared and the land entered into the food-fallow rotation.

Since we are limiting our considerations to significant alternatives, we assume that farmers with trees which are producing at maximum yield (third cohort) or with increasing productivity (second cohort) will not even consider clearing away those revenue-producing capital assets, even if, in the long run, replanting with Upper Amazon trees would be more profitable. Hence, in this model, the only alternative such farmers face is improved managerial control.

2. Improved

The stream of Amelonado trees under improved managerial control is handled in the model exactly the same as the Traditional trees with one exception. Since further improvement is not an alternative which we consider, land in trees in the first and fourth cohorts of this stream has only alternative uses: food-fallow, replanting and modern oil palm. By the same token, under the assumption discussed above in 1, land in the second and third cohorts faces no alternatives.

3. Replanted

Upper Amazon trees farmed under modern managerial and cultivational techniques on land formerly in Amelonado cocoa make up the third stream, or present use, of land. The reasoning behind the distinction between replanted "modern" cocoa and newly planted "modern" cocoa (on virgin or fallow land) is this: first, each is the target of a distinct government policy and campaign; and, secondly, yields of cocoa from each are different due to different soil fertilities.

The Replanted stream has the same four production stages as the Traditional and Improved trees, although the delays associated with these stages are of different lengths. The first stage of the Replanted or Newly Planted streams, the gestation period (three years), is very crucial, more so toward the beginning and less so as the production stage nears. It is at this time that the farmer can still afford to abandon cocoa, remove the trees and use the land more profitably, should his perception of his future in cocoa become rather pessimistic. That is, this is the period before the trees are producing, before too much has been invested in them and they grow too big to be cleared from the land easily and economically.

The model structure of the Replanted stream, then, begins with the gestation stage, represented by a delay of three years. The second delay in the stream, one of ten years, represents the period of rising productivity. This is followed by the stages of maximum yield (a delay of 20 years) and declining output (eight years).

Should a farmer in the Replanted stream decide to give up cocoa production, there are only two alternatives the model allows him: modern oil palm or food production. This is because, as mentioned earlier, we do not consider cases of backsliding, whether from modern to traditional trees or from modern to traditional methods.

Furthermore, only farmers with acreages of trees in the gestation stage face this decision. As outlined earlier, land in trees with increasing or maximum yields do not, for the purposes of this model, face any alternative uses. Trees in the stage of declining yields, the fourth delay, would normally face the alternatives of replanting and cash food production. In the interest of computer time and space, we simplified the model by excluding them from the decision sub-routine. This simplification is justifiable on two counts. First, since government replanting and new planting campaigns are fairly recent, few acres are currently in replanting or newly planted cocoa, and these represent only relatively young trees. Thus, planned simulation runs of fifteen or twenty years would bring few if any trees into the stage of declining productivity. Secondly, the useful life of the whole simulation model probably won't be long enough to make consideration of the replanting (second generation, say) of modern trees very meaningful.

4. Newly Planted

Modern cocoa planted on land formerly in virgin forest or in the food-fallow rotation makes up the Newly Planted stream. The model Structure of this stream is exactly the same as that of the Replanted stream discussed above, The model's handling of the alternative use relevant to this stream is also identical to that outlined for the Replanted stream.

5. Food-Fallow

Land in the food-fallow rotation comprises the Food-Fallow stream, or present use. By "food", we mean both subsistence food and food grown for market, or "cash" food. The model simulates this use of land as a series of two delays, the first representing fallow land, and the second, land actually in food production. The lengths of each delay and their sum are determined by the length of the rotation cycle and the extent of land use.

For example, delays of two and three years respectively would represent a five-year cycle; i.e. two years of fallow and three years of cultivation.

The alternatives facing a farmer with food-fallow land are: a) new planting or cocoa, b) modern oil palm, c) planting traditional cocoa (Amelonado, traditional methods and inputs), and d) planting improved cocoa (Amelonado trees, modern inputs and techniques). New planting, remember means Upper Amazon cocoa with modern inputs and managerial and cultivational techniques.

Although we assume government campaigns will only be directed at the first two alternatives, we must also assume there will be a certain number of farmers who won't be reached by these campaigns. They will continue to enter the cocoa export economy with traditional plantings (mainly in the new cocoa areas of Ondo Province). Others, while exposed to the promotion campaigns, are constrained from or are otherwise incapable of entering the modern cocoa sector, and so may enter the Traditional stream or enter the Improved stream using modern inputs from private suppliers.

6. Forest

Virgin forest andbushland can be put to five alternative uses: a) new planting of modern cocoa, b) modern oil palm, c) cash food production, d) traditional cocoa, or e) improved cocoa with private inputs. The last two of these are included for reasons outlined in the preceding paragraph.

7. Modern Oil Palm

Traditional oil palm production is not really a cultivational practice. Rather it is a process of mere collection of wild palms scattered throughout the bush forest. For this reason, such land is included, for the purpose of land use decisions only, in the Forest stream. The supply response for any given year's output will, of course, be handled differently.

Modern oil palm means cultivated oil palm using modern techniques. This stream is still in the very early stages of being modeled, therefore no description is made here.

ubroutine Decide

Land allocation among the alternative uses is based upon the farmers' perception of the profitability differentials

$$PD_{ij} = \frac{(DPV_i - DPV_j)}{DPV_j}, \quad i = 1,\ldots,n_j \; ; \; j = 1,\ldots,12$$

where:

PD_{ij} = the profitability differential of alternative i to present use j, % difference

$DPV_{i(j)}$ = the maximum annual average of the discounted present value of returns from alternative i (present use j), ₵/year/acre; and

n_j = the number of alternative uses open to present use j.

The reason j runs from 1 to 12 is that more than one production stage within the cocoa streams goes throughthis decision process.

In general, comparing the discounted present value of the future returns accruing to an alternative, say replanting, with that of a present use, say traditional, would be meaningless in view of the fact that each is based on a different planning horizon. In this case, the planning horizon for replanting is 40 years, while that of continuing with traditional cocoa is the remaining economic life of the trees in question, perhaps ten years. (See Table 1.)

To avoid this difficulty, we assume farmers are interested in the present value of the average annual returns they can expect rather than the

present values of all future returns over the entire planning horizon. To find the maximum average annual returns, the model calculates

$$DPV_j = \max_{k \in [1,17]} \sum_{i=1}^{k} (TR_i - TC_i)/(1 + r)^i/k$$

where:

DPV_j = as defined above

k = an integral number of years

n = the meaningful planning horizon, years (see Table 1)

TR_i = total revenue in year i, ƀ/acre

TC_i = total cost in year i, ƀ/acre

r = the discount rate

In effect, the model makes the actual planning horizon of the farmers as that value of k between 1 and n which gives the maximum average annual returns.

Total revenue in year i is calculated, simply as

$TR_i = PY_i * Y_i$

where:

TR_i = total revenue in year i, ƀ/acre

PY_i = producer price in year i, /ton

Y_i = output or yield in year i tons/acre

Since we are modeling here a farmers' decision function, the streams of producer prices and yields over the next n years should reflect the farmers' perceptions of what prices and production outputs are likely to be during that period of time. Presumably, one way to handle the price stream would be to somehow base it on recent past experiences and trends, however, we have not yet decided on how best to actually model a stream of future prices.

The stream of yields used is basically the age-specific biological capacities. These capacities, in the cases of traditional cocoa and food, are derived from experience. As regards modern cocoa, however, these capacities, as claimed by agronomists, must be adjusted downward to account for the farmers' realization that they, the farmers, are not experts working under optimum conditions at a modern research station.

On the other side of the ledger, total cost to the farmer in year i is determined by the following equation:

$$TC_i = PX_{1i} * X_{1i} + PX_{2i} * X_{2i} + PX_{3i} * X_{3i} (G_{1i} + G_{2i} + G_{3i}) + R_i$$

where:

TC_i = total cost in year i, ƀ/acre

PX_{1i} = price of labor in year i, ƀ/man-day

X_{1i} = man-days/acre of labor used in year i

PX_{2i} = price of biological inputs in year i, ƀ/ton

X_{2i} = tons/acre of biological inputs in year i

PX_{3i} = price of chemical inputs in year i, ƀ/ton

X_{3i} = tons/acre of chemical inputs in year i

G_{1i} = cash subsidies in year i ƀ/acre

G_{2i} = subsidies in kind in year i ƀ/acre

G_{3i} = credit loans in year i ƀ/acre

R_i = loans repayments in year i ƀ/acre

All of these variables are streams over the n years of the planning horizon. Some, such as repayment schedules and the form and amount of subsidies, are government policy variables. The input prices are determined by the market, and the quantities of inputs used are derived from technological and empirical data.

Again, these variables should reflect farmers' expectations of their (the variables') actual future values. This is particularly important in the case of government subsidy and loan programs. As with producer cocoa prices, since farmer expectations of future subsidies are based somewhat on experience, the difference between these expectations and government pronouncements will diminish as the government lives up to its promises and thus modifies the farmers' experience.

In making their estimations of the profitability differentials of the various alternatives to each present use, the farm decision-makers require certain informational inputs, particularly information on future producer prices, expected yields for modern cocoa, government or private subsidy and loan programs, and expected costs. The model provides this needed information through information units.

We introduce the concept of an information unit so that consideration can be given to various possible alternative means of disseminating information and promoting production campaigns. Of course, promotional extension agents will be the main form of information units. But, in addition, radio broadcasts, film showings and newspaper coverage can be used by both government and private agencies. The use of newspapers and other printed matter is, at present, not a feasible medium, however, as literacy rates increase in the population, this means of communication may become more significant in Nigeria.

The number of information units provided from government and private sources for promotion of alternative k to present use j is calculated by the following equation:

$$EINF_{kj} = EINFG_{kj} + EINFP_{kj}$$

where:

$EINF_{kj}$ = information units for alternative k to present use j

$EINFG_{kj}$ = government supplied information units

$EINFP_{kj}$ = privately supplied information units

Notice that the model not only allows for private suppliers of inputs but also provides for those suppliers conducting promotional campaigns to create a demand for those inputs.

So, each time a present use j calls DECIDE, the profitability differentials, PD_{ij}, of all the alternatives i relevant to that use are calculated. The PD_{ij} are then ranked from highest to lowest, and the profitability response is calculated for each ranked alternative k in this order. The assumption here is that the most profitable alternative is most likely to be the first choice of most of the decision-makers making a choice.

The profitability response function determines the response of the farmers to the profitability differential they see facing them with alternative k to present use j.

$$PR_{kj} = \max\ [C3_{kj}(1. - \exp\ [- C2_{kj}(PD_{kj} - C1_{kj})]), 0]$$

where:

PR_{kj} = the profitability responses, proportion of the maximum acres/year/info. unit

PD_{kj} = the profitability differential as earlier defined

$C1_{kj}$ = the response threshold £/year/acre

$C2_{kj}$ = a parameter determing the shape of the curve

$C3_{kj}$ = the maximum proportion of the maximum number of acres/year an information unit can convert from present use j to alternative k under conditions of infinite profitability (normally 1)

Graphically, this function looks like this:

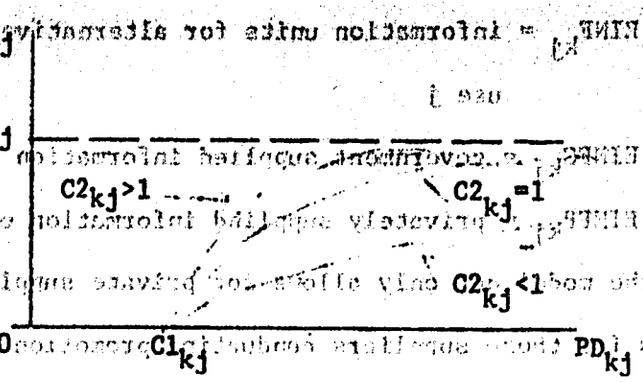

Notice that there is a definite positive profitability differential, $C1_{kj}$, which must be surpassed before there is any response.

Both $C1_{kj}$ and $C2_{kj}$ reflect the farmers' attitudes and behavioral characteristics which affect the rate of their response to the profitability differentials of the various alternatives facing them. The factors determining both of these parameters are the degree to which the trees are fixed assets, risk aversion, the amount of inconvenience the farmers may see in an alternative use (including particularly the extent and quality of roads and the transport system), the age of the present trees, farmers' attitudes towards government programs and promises in general, and cultural inertia. Rather than incorporate a diffusion mechanism into the model, we decided to include the diffusion effect within the parameter $C2_{kj}$ which determines the shape of the response curve. Thus, the rate of response for a given profitability differential is directly proportional to the rate of diffusion.

As profitability increases, the response function approaches $C3_{kj}$ as a limit. This parameter is determined as follows:

$$C3_{kj} = MIN[TLA_{kj}/(EINF_{kj} * C5), 1]$$

where:

$C3_{kj}$ = as earlier defined

$C5$ = the maximum number of acres/year an information unit can convert depending on training, efficiency and physical limitations

$EINF_{kj}$ = the number of information units promoting alternative k to present use j

TLA_{kj} = the total land in present use j available for conversion to alternative k.

This equation sets the maximum of the response function equal to the lesser of the limits imposed by the amount of land available for transition and the efficiency of the information units. The amount of land available for transition from use j to use k is a proportion, $C4_{kj}$, of the total land in use j, TL_j.

The profitability response, PR_{kj}, is multiplied by the number of information units, $EINF_{kj}$, and the efficiency of an information unit, C5 (in acres/year). The product then represents the rate at which farmers want to convert from present use j to alternative k. After a one-year decision and administrative delay, this rate is constrained by the supply of scarce inputs. The scarce inputs are biological materials, chemical materials, technical assistance, extension agents and financing (subsidies and credit). Although we assume labor inputs are not scarce, the price of labor may fluctuate, perhaps causing an increased demand for credit.

The supply of scarce inputs is controllable, either directly or indirectly, by the government. In the case of alternative uses with government inputs, the government, as direct supplier of the inputs, can easily control their availability. The supply of inputs from private sources can also be controlled through government imposition of import licenses and other market-regulating practices. Thus, the supply of scarce inputs

is an important government policy control variable. This, along with the number of information units used and the cocoa producer prices, can be used to control the transitions among the various land uses.

The input constraint is calculated by the following equation:

$$ATRN_{kj} = \min[DTRN_{kj}, C9_{kj} * FINCE_{kj}, C6_{kj} * CHEMAV_{kj}, C7_{kj} * BIOAV_{kj}, C8_{kj} * TAEXT_{kj}]$$

where:

$ATRN_{kj}$ = the actual transition from present use j to alternative k, acres/year

$DTRN_{kj}$ = the desired transition, acres/year

$FINCE_{kj}$ = financing available for transition from j to k, ₤

$C9_{kj}$ = the rate of transition made possible by available financing, acres/year per ₤

$BIOAV_{kj}$ = biological materials available for transition from j to k, lbs.

$C7_{kj}$ = the rate of transition possible by the available biological inputs, acres/year/lb.

$TAEXT_{kj}$ = technical assistance extension agents available for transition from j to k

$C8_{kj}$ = acres/year of transition per extension worker available.

$C6_{kj}$ = acre/year possible per pound of chemical

$CHEMAV_{kj}$ = chemical inputs available

If the supplies of these three inputs are abundant enough, all those farmers wanting to convert their land, $DTRN_{kj}$, will be able to do so, $ATRN_{kj}$. Otherwise, the input which places the tightest constraint determines the actual transition rate.

Finally, $ATRN_{kj}$ becomes part of the input rate--other present uses may

also contribute to the input rate--to stream k, and the number of acres this represents is substracted from TL_j, the total land in use j. We now return to the ranking for the next most profitable alternative, calculate its profitability response and proceed as before.

Production

The output of the cocoa sector in any given year is calculated, simply, as

$$TCP = \sum_{j=1}^{12} Y_j * TL_j$$

where:

TCP = total cocoa production, tons

Y_j = yield of use (age group) j, tons/acre

TL_j = number of acres in use (age group) j.

Reference to Figure 2 will show twelve age groups (delays) of cocoa above the gestation stage in the four cocoa streams. Hence, j runs from 1 to 12.

The yield of any age group of any stream in a particular year depends on a number of factors. Some of these factors are the same for any age and type of tree; others, those subscripted j, do depend on the particular age group and stream under consideration.

$$Y_j = X_j * W * D_j * P * L_j * C_j$$

where:

Y_j = actual yield in tons/acre

X_j = yield under optimum conditions (biological capacity)

W = a random variable weather factor

D_j = a random variable disease factor

P = price response factor

L_j = labor availability factor

C_j = chemical input availability factor

These adjustments of the optimum yield, due to conditions prevailing in a particular year, all have values lying between zero and one.

The production of food is handled differently. Although food is grown both for subsistence and for market, for the purposes of this model, we are only interested in the output of cash (market) food. The portion of total food production which is subsistence may vary from year to year, depending on the size and growth of the rural population and on market food prices and market stability. An unstable market with high food prices relative to farm income will induce greater dependency on subsistence food crops.

The growth and size of the urban population and the degree of rural dependency on the market food economy are the main determinants of the output of cash food. An important potential influence on cash food production in the West is competition with food imported from other regions of Nigeria. If food grown in the Middle Belt, say, can be marketed in the West at a low enough price in a stable enough market, Western farmers may specialize in export crop production and rely on the North for their food.

These concepts concerning food production have not yet been incorporated into the model.

Conclusion

This, then, is the stage to which the model of the cocoa economy of Western Nigeria has been developed. Six uses of land have been defined and structured, and the decision function determining transitions among these has been modeled. This decision function assumes Nigerian cocoa farmers are economically rational; hence, decisions are based on the farmers' perceptions of alternative profitability differentials.

Cocoa production for any given year depends on the amount of land in each cocoa stream and the yields of each age group of trees. The yields in a particular year are affected by factors such as weather, disease, producer price, and availability of inputs. This last factor would be reflected in the input prices.

We have yet to model the output of cash food and the demand for inputs. When the model is "complete", it must be programmed and debugged. Test runs and sensitivity runs will then be necessary to polish up the parameters and the data. Finally, we must generalize the whole model so it can be used for the rubber and oil palm economies elsewhere in the South.

PART IV

Beef Marketing and Transportation in Nigeria--An Allied Study

As indicated in the beef production model, the majority of the cattle in Nigeria is produced in the northern part where the tsetse fly infestation is minimal. However, the large urban and rural populations in the south account for about 1/2 of the total beef consumed in Nigeria. Therefore, the physical distances from production areas to important consumer areas in the south are quite substantial. Cattle are often walked or railed 700 to 1,000 mile distances, through tsetse fly areas. As a consequence, weight and death losses are often substantial. Also, prices in the south are often twice the price in some northern areas.

The beef transportation study was initiated to evaluate alternative methods of transportation and to develop an optimum transportation plan through time for beef distribution in Nigeria. The interaction between alternative transportation plans and the supply and demand for beef was also evaluated.

To accomplish these purposes, Nigeria was divided into 15 different areas as shown in Map 1. A model was built to determine the costs of transporting beef by five different methods between all combinations of shipping and consuming areas. The five methods evaluated are: (1) trekking of live animals, (2) rail hauling of live animals, (3) truck hauling of live animals, (4) meat transport by refrigerated trucks, (5) meat transport by refrigerated rail car.

Using the costs resulting from this model, supply and demand estimates for the 15 areas, costs and locations of modern slaughter facilities, and rail car availabilities, a transhipment linear program was developed to compute the least cost configuration for Nigerian beef distribution. The

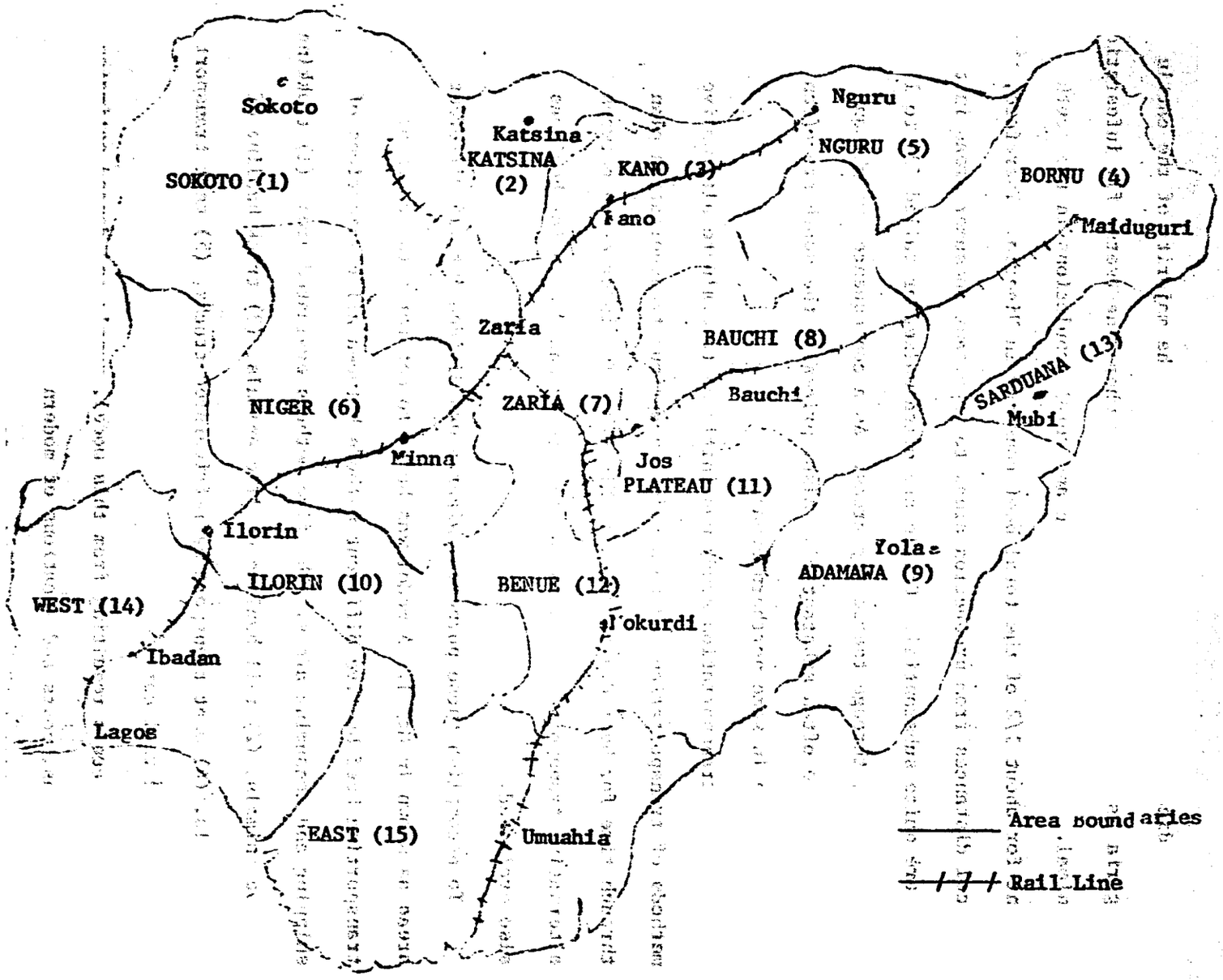
Sokoto
SOKOTO (1)
Katsina
KATSINA (2)
KANO (3)
Kano
Nguru
NGURU (5)
BORNU (4)
Maiduguri
Zaria
ZARIA (7)
BAUCHI (8)
Bauchi
SARDUANA (13)
Mubi
NIGER (6)
Minna
Jos
PLATEAU (11)
Ilorin
ILORIN (10)
WEST (14)
Ibadan
Lagos
BENUE (12)
Makurdi
Yola
ADAMAWA (9)
EAST (15)
Umuahia
Area boundaries
Rail Line

Figure B

results of this model give the quantities of both meat and live cattle shipped between areas, method of shipment used, quantity slaughtered in each area at both modern and traditional facilities, number of rail cars to be allocated annually on each route and the minimum total cost of distributing the beef under the conditions specified.

An additional model was constructed to evaluate the likely consequences of alternative transportation schemes on the prices of beef and, hence, supply and demand of beef through time. To do this, supply and demand functions were estimated from information gathered in Nigeria. The quadratic programming technique was used to develop this price equilibrium model.

Some representative sets of results from these models will be given to illustrate their usefulness. It must be emphasized that the data used for this study is, of course, relatively weak. Consequently, no definite policy conclusions should be drawn without better information. However, the results may be suggestive of general policy directions which might be desirable, given the level of information currently available in Nigeria.

The first model (hereafter referred to as TRNSCST) specifies in detail the costs of alternative transportation methods that users incur. Because of its detailed specification, TRNSCST can be used to evaluate policies to improve the efficiency of beef transportation. Examples of these policy alternatives include (a) vaccination against trypanosomiasis infection (b) improved water and feed supply along trek routes (c) supplementary feeding of animals hauled by rail (d) feeding stops on long rail hauls and (e) proper conditioning of cattle before and after the trip. Tables 1, 2, 3, and 4 indicate the costs involved in the three main methods of transporting live cattle in Nigeria on three primary routes. For rail or truck hauling, freight and shrinkage costs account for most of the total transportation costs.

Table B-1: Costs of Transporting Cattle from Kano to the West

TRUCK			RAIL			WALK		
Category	Cost-£/cow	% of Total	Category	Cost-£/cow	% of Total	Category	Cost-£/cow	% of Total
Mortality Cost	.63	4.54	Mortality Cost	.12	1.6	Mortality Costs	.57	6.1
						Salvage Costs	1.14	12.0
Shrinkage Cost	4.46	32.2	Shrinkage Cost	3.34	44.5	Shrinkage Cost	4.43	46.9
Other Expenses	.40	2.9	Other Expenses	.40	5.3	Other Expenses	.40	4.2
Freight Cost	8.37	60.36	Freight Costs	3.05	40.7	Drover's Fee	1.19	12.6
			Attendant Costs	.59	7.9	Food Money	.20	2.1
						Interest Costs	.40	4.2
						Water and Fee Cost	1.12	11.9
Total	£13.86	100.00		£7.50	100.00		£9.45	100.00

Table B-2: Costs of Transporting Cattle from Kano to the West

TRUCK			RAIL			WALK-WITH VACCINATION		
Category	Cost-£/head	% of Total	Category	Cost-£/head	% of Total	Category	Cost- /head	% of Total
Mortality Cost	.63	4.54	Mortality Cost	.12	1.6	Mortality Cost	.28	5.3
						Salvage Cost	.58	10.9
Shrinkage Cost	4.46	32.2	Shrinkage Cost	3.34	44.5	Shrinkage Cost	1.14	21.4
Other Expenses	.40	2.9	Other Expenses	.40	5.3	Other Expenses	.40	7.5
Freight Costs	8.37	60.36	Freight Cost	3.05	40.7	Drover's Fee	1.19	22.4
			Attendant Charge	.59	7.9	Food Money	.20	3.8
						Interest Cost	.40	7.5
						Water and Feed	1.13	21.2
Total	£13.86	100.00		£7.50	100.00		£5.32	100.00

Table B-3: Costs of Transporting Cattle from Maiduguri to the East

TRUCK			RAIL			WALK		
Category	Cost-£/cow	% of Total	Category	Cost-£/cow	% of Total	Category	Cost-£/cow	% of Total
Mortality Cost	.81	4.9	Mortality Cost	.21	2.1	Mortality Cost	.72	6.1
						Salvage Cost	1.45	12.2
Shrinkage Cost	5.05	30.6	Shrinkage Cost	4.83	48.2	Shrinkage Cost	5.55	46.8
Other Expenses	.40	2.4	Other Expenses	.40	4.0	Other Expenses	.40	3.4
Freight Cost	10.25	62.1	Freight Costs	3.83	38.3	Drovers' Fee	1.39	11.7
			Attendant Cost	.74	7.4	Food Money	.24	2.0
						Interest Cost	.50	4.2
						Water and Feed Cost	1.61	13.6
Total	£16.51	100.00		£10.01	100.00		£11.86	100.00

Table B-4: Costs of Transporting Cattle from Sokoto to the West

TRUCK			RAIL			WALK		
Category	Cost-£/head	% of Total	Category	Cost-£/head	% of Total	Category	Cost-£/head	% of Total
Mortality Cost	.54	4.3	Mortality Cost	.153	1.9	Mortality Cost	.44	5.6
						Salvage Cost	.88	11.1
Shrinkage Cost	4.25	34.2	Shrinkage Cost	4.097	48.4	Shrinkage Cost	3.76	47.3
Other Expenses	.40	3.2	Other Expenses	.40	4.7	Other Expenses	.40	5.0
Freight Cost	7.25	58.3	Freight Cost	3.20	37.8	Drovers' Fee	1.01	12.7
			Attendant Cost	.61	7.2	Food Money	.17	2.1
						Interest Cost	.35	4.4
						Water and Feed Cost	.94	11.8
Total	£12.44	100.00		£8.46	100.00		£7.95	100.00

However, death, forced sales because of disease, and tissue shrinkage are a more important percentage of the total costs of trekking. Since the trypanosomiasis disease is an important factor in trekking losses, an effective vaccination program can reduce costs significantly as seen by comparing Tables 1 and 2. If such a policy is implemented (as is being considered in Nigeria now), it very possibly could change the shippers' preference from rail hauling to trekking. This effect will be illustrated in the next model.

Using the costs calculated by the TRNSCST model, supply and demand estimates for the 15 areas, costs and locations of modern slaughter facilities, and rail car availabilities, the transhipment program computes the least cost beef transportation design for Nigeria. A few results will illustrate the usefullness of this model.

Table 5 gives the least cost transportation pattern with policies as they now exist in Nigeria. The three supply distributions assumed represent (a) the migration of cattle to the southern grazing areas in the dry season as the tsetse fly recedes, and (b) movement north as the wet season ensues and the fly moves northward again, and (c) the weighted average supply in each location during the whole year. In this run, all rail cars available were used since rail hauling is relatively cheaper than trekking or truck shipment for most routes. This supports the contention of many Nigerians that the number of rail cars is a limiting factor in the beef distribution system.

Consequently, another run studied what changes would occur if the availability of rail cars was not a limiting factor. This result is given in Table 6. It can be seen that the number of rail cars utilized was not increased significantly--only six additional under the "average" supply

Table B-5: Optimum Transportation Pattern for Beef in Nigeria Under Present Conditions

Activity	Number of Rail Cars	Number of Cattle Shipped Average Supply	Number of Rail Cars	Number of Cattle Shipped Wet Season Supply	Number of Rail Cars	Number of Cattle Shipped Dry Season Supply
X441-Frozen Meat Shipment by Rail-Bornu to West	-	13,860	-	13,860	-	13,860
X451-Frozen Meat Shipment by Rail-Bornu to East	-	8,140	-	8,140	-	8,140
54 Modern Slaughter Level-Bornu	-	22,000	-	22,000	-	22,000
W110-Live Animal Trek-Sokoto to Ilorin	-	6,792	-	-	-	7,167
W114-Live Animal Trek-Sokoto to West	-	77,766	-	93,058	-	67,566
W210-Live Animal Trek-Katsina to Ilorin	-	-	-	6,592	-	-
W214-Live Animal Trek-Katsina to West	-	-	-	1,623	-	-
W36-Live Animal Trek-Kano to Niger	-	-	-	607	-	-
W37-Live Animal Trek-Kano to Zaria	-	9,352	-	14,377	-	4,452
W614-Live Animal Trek-Niger to West	-	1,713	-	-	-	-
W812-Live Animal Trek-Bauchi to Makudi	-	6,425	-	11,200	-	-
W912-Live Animal Trek-Adamawa to Makurdi	-	15,417	-	16,317	-	14,992
W915-Live Animal Trek-Adamawa to East	-	33,560	-	23,660	-	39,910
D1112-Live Animal Trek-Benue to Makurdi	-	7,936	-	3,386	-	12,286
D1312-Live Animal Trek-Sardauna to Makurdi	-	12,039	-	13,989	-	9,489
R26-Live Animal Rail-Katsina to Niger	-	-	4.1	7,995	-	-
R214-Live Animal Rail-Katsina to West	23.7	26,402	14.1	15,707	17.4	19,384
R314-Live Animal Rail-Kano to West	1.26	1,638	-	-	1.2	1,560
R414-Live Animal Rail-Bornu to West	36.6	25,953	30.4	21,557	38.9	27,584
R415-Live Animal Rail-Bornu to East	63.7	55,209	75.7	65,609	54.4	47,148
R514-Live Animal Rail-Nguru to West	86.3	96,138	87.7	97,698	83.2	92,685
R614-Live Animal Rail-Niger to West	-	-	-	-	10.7	20,865
R815-Live Animal Rail-Bauchi to East	.37	481	-	-	1.7	2,210
Total Rail Cars Used	212	398,821	212	415,375	208	389,298
Total Cost of Transportation £'s		£4,513,251		£4,608,193		£4,410,203
% Carried by Rail	55%		53%		58%	
% Trekked	45%		47%		42%	

Table B-6: Optimum Transportation Pattern with Unlimited Rail Cars Available

Activity	Number of Rail Cars	Average Supply Distribution	Number of Rail Cars	Wet Season Supply Distribution	Number of Rail Cars	Dry Season Supply Distribution
X441-Frozen Meat Shipment by Rail-Bornu-West	-	13,860	-	13,860	-	13,860
X451-Frozen meat shipment by Rail-Bornu-East	-	8,140	-	8,140	-	8,140
S4-Modern Slaughter Level-Bornu	-	22,000	-	22,000	-	22,000
W110-Live Cattle Trek-Sokoto to Ilorin	-	6,792	-	6,592	-	7,167
W114-Live Cattle Trek-Sokoto-West	-	77,766	-	86,466	-	67,566
W37-Live Cattle Trek-Kano-Zaria	-	9,352	-	14,377	-	4,452
W912-Live Cattle Trek-Adamawa-Benue	-	21,842	-	27,517	-	14,992
W915-Live Cattle Trek-Adamaw-East	-	27,135	-	12,460	-	39,910
D1112-Live Cattle Trek-Plateau-Benue	-	7,936	-	3,386	-	12,286
D1312-Live Cattle Trek-Sarduana-Benue	-	12,039	-	13,989	-	9,489
R26-Live Animal Rail-Katsina-Niger	-	-	4.4	8,580	-	-
R214-Live Animal Rail-Katsina-West	23.7	26,402	20.9	23,283	17.4	19,384
R314-Live Animal Rail-Kano-West	1.3	1,690	.47	611	1.2	1,560
R414-Live Animal Rail-Bornu-West	26.6	25,953	30.4	21,557	38.9	27,584
R415-Live Animal Rail-Bornu-East	63.7	55,209	75.7	65,609	54.4	47,148
R514-Live Animal Rail-Nguru-West	86.3	96,138	87.7	97,698	83.2	92,685
R614-Live Animal Rail-Niger-West	.9	1,755	-	-	10.7	20,865
R815-LIve Animal Rail-Bauchi-East	5.3	6,890	8.6	11,180	1.7	2,210
Total Rail Cars Used	218		228		208	
Total Cost of Transportation in £'s		£4,511,170		£4,593,433		£4,410,203
% Carried by Rail		57%		58%		58%
% Trekked		43%		42%		42%

conditions. The savings in total distribution costs amounted to about £2,10(from the original £4,511,170. By providing more rail cars, the percentage hauled by rail only increased by 2-3%. There are two primary reasons for this small increase in use of rail cars as more become available. First, the trek distance from area 1 - a large producing area to the western consuming area is about 25% shorter than the longer rail distance. Because trekking is cheaper no additional rail cars will be used to ship from area 1. Secondly, two large producing areas (9 and 13) are not served by the Nigerian rail network. As a consequence, distances traveled in the eastern consuming region are much shorter if the cattle are trekked directly rather than walked to a rail station and then taken down on rail cars. Therefore, increasing the number of rail cars available for beef shipment will not affect the pattern of shipment from these two areas.

The impact of a vaccination program for cattle being trekked is shown in Table 7. This policy changes the shipment pattern significantly. Essentially the rail system would not be used. The total transportation cost is reduced by approximately 20% from £4,513,251 to £3,568,515. However, further refinements of the model should indicate that as the number of cattle using trek routes increases the costs will also. If this would be reflected in the model, the cost reduction would be less than suggested in Table 7. Again, it should be emphasized that the information used in these estimates was the best available, but not necessarily accurate. Additional experiments with this model deal with the requirements for modern slaughter facilities, refrigerated meat shipment, and the interaction between meat and cattle shipment patterns and transport requirements.

A third model was constructed to evaluate the consequences of lowering the transportation charges on the supply and demand of beef in the 15 areas. Supply and demand equations were estimated for each of the 15 areas from

data taken from consumer surveys and time series that were available. In essence, this model calculates the equilibrium price structure resulting from the transfer costs that exist among the 15 areas. The model allocates supplies among the areas until the following condition holds.

$$P_1 - P_2 \leq t_{12}$$

where:

P_1 = price in area 1

P_2 = price in area 2

t_{12} = transfer cost between area 1 and 2.

That is, cattle will be shipped from area 1 to area 2 if the difference in price between two areas is greater than the cost of transfer. This will continue until the price differential is equal to the transfer charge. As this leads to the maximization of a quadratic function, the quadratic programming technique was used to solve the problem.

Tables 8 and 9 compare the equilibrium price structures and shipment patterns that result from alternative transportation systems. Run I uses trekking costs as the transfer charges. This probably best reflects the present situation in Nigeria. The cheapest transportation rates (whether rail or trek cost) were used for transfer charges in run II. In run III, transfer costs were set at rates that would be consistent with a trypanosomiasis vaccination program.

In general, the trend is for prices to increase in the producing areas (1-9) and decrease in the large southern consuming areas (14 and 15) as the lower cost transportation systems are implemented. Total shipments to the southern areas increase from 416,750 to 474,992 while total production in Nigeria increases from 910,000 to 933,000 as transfer losses are lowered to the probable situation under a vaccination program.

Additional experiments with the model will allow demand to grow through time as a function of income and population increases, along with some alternative supply assumptions. By taking the supplies and demands generated by this model, the transhipment model can give the specific transport method to be used and hence, the likely future requirements for rail cars, slaughter facilities, and supporting inputs needed to support the optimum transportation pattern.

Table B-7 Optimum Transportation Pattern with a Trypanosomiasis Vaccination Program

Activity	Number of Rail Cars	Average Supply Distribution	Number of Rail Cars	Wet Season Supply Distribution	Number of Rail Cars	Dry Season Supply Distribution
X441-Frozen Meat Shipment by Rail-Bornu-West	-	13,860	-	13,860	-	13,860
X451-Frozen Meat Shipment by Rail-Bornu-East	-	8,140	-	8,140	-	8,140
S4-Modern Slaughter Level-Bornu	-	22,000	-	22,000	-	22,000
W114-Live Animal Trek-Sokoto-West	-	84,558	-	93,058	-	74,733
W210-Live Animal Trek-Katsina-Ilorin	-	5,160	-	6,592	-	-
W214-Live Animal Trek-Katsina-West	-	21,254	-	25,322	-	19,414
W36-Live Animal Trek-Kano-Niger	-	-	-	607	-	-
W37-Live Animal Trek-Kano-Zaria	-	9,352	-	14,377	-	4,452
W310-Live Animal Trek-Kano-Ilorin	-	1,632	-	-	-	1,532
W410-Live Animal Trek-Bornu-Ilorin	-	-	-	-	-	5,635
W412-Live Animal Trek-Bornu-Benue	-	-	-	1,529	-	-
W414-Live Animal Trek-Bornu-West	-	25,960	-	21,585	-	21,950
W415-Live Animal Trek-Bornu-East	-	55,325	-	64,171	-	47,200
W514-Live Animal Trek-Nguru-West	-	96,155	-	89,675	-	92,655
W614-Live Animal Trek-Niger-West	-	1,713	-	-	-	20,888
W815-Live Animal Trek-Bauchi-East	-	6,900	-	11,200	-	2,250
W912-Live Animal Trek-Adamawa-Benue	-	33,881	-	39,977	-	24,481
W915-Live Animal Trek-Adamawa-West	-	15,096	-	-	-	30,421
D1112-Live Animal Trek-Plateau-Benue	-	7,936	-	3,386	-	12,286
D1315-Live Animal Trek-Sarduana-East	-	12,039	-	13,989	-	9,489
R5-6-Live Animal Rail-Nguru-Niger	-	-	6.1	7,930	-	-
Total Rail Cars Used	0		6.1		0	
Total Cost of Transportation		£3,568,515		£3,640,738		£3,477,003

Table B-8: Price Structures for Alternative Transfer Charges
(in £'s per head)

Area	Run I	Run II	Run III
1	21.2	19.4	20.3
2	19.7	19.2	19.6
3	19.6	19.9	20.2
4	14.0	15.8	16.2
5	17.3	18.5	18.4
6	24.6	25.0	25.3
7	21.3	22.6	22.9
8	19.0	20.9	21.3
9	17.1	17.1	17.6
10	24.3	24.3	24.3
11	19.3	19.4	19.7
12	22.9	23.3	22.6
13	16.2	16.7	18.3
14	30.1	28.4	26.3
15	26.8	26.8	24.1

Run I - Trek costs used as transfer charges

Run II Least cost pattern used as transfer charges

Run III Least cost pattern resulting from a trypanosomiasis vaccination program used as transfer charges.

Table B-9: Shipment Patterns for Alternative Transfer Charges
(in number of cattle)

Route	Run I	Run II	Run III
1-14 Sokoto to West	141,317	114,468	127,843
2-14 Katsina to West	24,216	10,664	24,025
2-6 Katsina to Niger	-	10,644	-
3-6 Kario to Niger	-	-	10,014
3-7 Kano to Zaria	-	8,392	5,513
3-14 Kano to West	8,243	3,076	-
4-6 Bornu to Niger	11,379	-	-
4-7 Bornu to Zaria	11,552	-	-
4-8 Bornu to Bauchi	18,769	9,995	8,104
4-12 Bornu to Benue	4,949	-	37,912
4-14 Bornu to West	8,265	65,451	68,575
4-15 Bornu to East	34,898	34,752	-
5-7 Nguru to Zaria	-	-	2,094
5-14 Nguru to West	94,924	103,318	100,542
9-12 Adamawa to Benue	-	557	1,730
9-15 Adamawa to East	89,990	89,583	92,795
11-15 Plateau to East	14,897	15,357	16,648
13-12 Sarduana to Benue	33,523	35,979	-
13-15 Sarduana to East	-	-	44,564
Total shipped to the West (14)	276,965	296,977	320,985
Total shipped to the East (15)	139,785	139,692	154,007
Total shipped to the South (14 + 15)	416,750	436,669	474,992
Total number of cattle produced in Nigeria	910,000	922,137	933,000

PART V

Future Plans

As is apparent from the foregoing discussion, the major components and mechanisms of the northern regional model have been completed and are now being integrated into a tightly-linked regional model. As we continue this process, we plan to modify and make more realistic some interactions between major components of the model which may not have been comprehensively considered in the past. For example, the yields of many crops in northern Nigeria are heavily dependent upon the relationship between the date of planting and the onset of the rainy season. With labor supply appearing to be a limiting resource at planting time, it seems likely that yields of some crops are dependent upon the number of acres of other crops to be planted. Further, the number of acres of a food crop that are required for subsistence are dependent upon the expected yield. This particular interaction between sectors of the northern regional model may serve as an illustration of the kinds of interactions between subsectors of the regional model which will be examined and modeled during the next few months.

As the northern regional model components are connected together and checked for consistency and realism, much more sensitivity analysis of particular structural and parameter components will be undertaken in an effort to diagnose any remaining conceptual, behavioral, and programming errors in the model, and to further identify high priority development alternatives and data needs. We plan to begin developing a generalized optimization program which will adjust "uncertain" coefficients in the model so that model behavior will more closely coincide with the behavior of the real economy, at least as it has been observed over the last decade

or so. Not only can a generalized optimization program serve to improve the fit of the model with historical behavior , but it can be later used to determine policies which would best achieve the goals of a particular policy maker in situations where he can specify a unique goal or weighted combination of goals as his ultimate objective.

We have done some initial conceptualization of the model mechanisms which will need to be developed for a realistic simulation of the southern tree-root crop agricultural economy. We now plan to concertedly move into building a Southern regional model which is comparable to our Northern model in scope and detail. We foresee that substantial effort will be required to develop a comprehensive model of the Southern region; however, the process should be greatly simplified compared to what it would have been because many aspects of the northern model which we have developed will be adaptable to aspects of the Southern agricultural economy. We do foresee some particular facets that may be somewhat different from the situation seen in the north. For example, the longer planting horizon involved in an agricultural sector where perennial tree crops are quite prevalent introduces some important questions about flows of investment, short-run nutritional requirements,and expectations of potential profits required before a perennial tree crop enterprise is begun, modified, or liquidated. Similarly, the closer proximity of southern farmers to more highly industrialized areas suggests that there may be some closer tie-ins with the non-agricultural economy in the South compared to the North Since hired labor is often used in southern crop production, regional flows of migratory labor within the agricultural sector may be more important in the southern region. At the same time, the proximity of the agricultural labor force to more industrialized areas may make labor availability for

for agriculture in the Southern Region more heavily dependent upon conditions in the industrial economy of Nigeria.

As we complete the Northern Regional model and begin to work in earnest on the Southern Regional model, we must also anticipate which mechanisms will be required to simulate the interactions between these two major sub-sectors within our overall model of the economy. Of particular interest will be an interregional trade mechanism which will allow flows of goods, particularly food, to go from one region to the other if price discrepancies between the two areas are sufficiently high to warrant producing food in one area and transporting it to the other. By incorporating such a mechanism in the model, it will be possible to study the likely impact of regional production specialization on both the utilization of resources within each area and the consequent levels of nutrition and farm income which would result. At the same time, the opportunity costs of policies requiring regional self-sufficiency in particular commodities may also be examined.

We tentatively plan to have some conprehensive seminars in both the United States and in Nigeria. These seminars will be designed to promote critical discussions and constructive suggestions for model modifications and change. Not only do we hope to seminar with Nigerian, AID, and other planning personnel in Nigeria, but we also hope to supplement these seminars with follow-up discussions and information gathering in Nigeria to supplement the information which we now have available. We hope that these seminars can be completed by the end of April or May so that the last six months of model construction and experimentation can be directed toward alleviating any major problems which might be diagnosed. In so doing we will have the model in the best possible condition (within the resources of the current grant) for any subsequent work to apply the model

to planning in Nigeria.

We plan to maintain the same basic research team personnel on the simulation project over the next year, capitalizing more on some of the training and experience which several of our graduate student colleagues have been accumulating during the beginning phases of the project. In addition, we also hope to capitalize on the knowledge of both host-country and expatriate experts on the Nigerian economy during our visit there. Further, the experience and knowledge of two MSU Nigerian graduate students acquainted with the Southern economy will be quite helpful, especially since their research plans are currently oriented toward studying elements of the Southern agricultural economy within Nigeria. Mr. Earl Kellogg will soon be leaving the project to join the staff at the University of Illinois. As a by-product of this contractual research, he will be publishing a Ph.D. thesis at Michigan State University covering in much more detail some of the beef production and transportation model components.