AGENCY FOR INTERNATIONAL DEVELOPMENT
WASHINGTON, D. C. 20523

BIBLIOGRAPHIC INPUT SHEET

FOR AID USE ONLY
Batch 31

1. SUBJECT CLASSIFICATION

A. PRIMARY
Serials — Y-AA00-0000-G214

B. SECONDARY
Agriculture--General--Nigeria

2. TITLE AND SUBTITLE
A simulation model of the Nigerian agricultural economy; progress report, Nov.1967-April,1968

3. AUTHOR(S)
(101) Mich.State Univ. Dept.of Agr.Economics

4. DOCUMENT DATE	5. NUMBER OF PAGES	6. ARC NUMBER
1968	9p.	ARC

7. REFERENCE ORGANIZATION NAME AND ADDRESS
Mich.State

8. SUPPLEMENTARY NOTES (Sponsoring Organization, Publishers, Availability)
(Research summary)

9. ABSTRACT

10. CONTROL NUMBER
PN-AAB-747

11. PRICE OF DOCUMENT

12. DESCRIPTORS
Nigeria
Sector analysis

13. PROJECT NUMBER

14. CONTRACT NUMBER
CSD-1557 Res.

15. TYPE OF DOCUMENT

AID 590-1 (4-74)

ag 4

MICHIGAN STATE UNIVERSITY

PROGRESS REPORT SUMMARY -
AGRICULTURAL SECTOR MODELS

AID/csd-1557
April 19, 1968

The basic objective of this study is to develop computer simulation models which will ultimately prove useful to policy and decision makers in formulating and evaluating programs intended to improve agricultural sector productivity in developing countries. During the first year of the study, attention has been focused on models of the Nigerian beef industry and on closely related activities such as feed production, meat processing and marketing. This summary will first briefly describe research done during the first six months. Then, future work, results expected this year, and potential procedures for using these models are presented.

Research to Date: Work began with the accumulation and survey of a large volume of relevant information from such sources as the Nigerian government, FAO, USAID, CSNRD, a range of technical journals and earlier simulation studies. A team of agricultural economists, systems engineers, animal scientists and computer programmers was assembled and seminars were held, occasionally including consultants with extensive experience in northern Nigeria. After gathering this initial information and obtaining a general description of what was to be simulated, one team member spent three weeks in Nigeria acquiring additional data and information. The field trip was followed by a modeling phase which produced a preliminary model of Nigerian beef production and alternative modernization programs deemed

viable enough for exploration in a simulation study. This model underwent modifications, improvements, and extensive tests for logical consistency. The structure of the revised model, Macro Model II, is shown in Figure 1 (attached).

The beef production sector has been separated into traditional and modern sectors. Several modernization programs have been incorporated into the model and explored. These include developing modern grazing reserves, tsetse fly eradication, expansion of feed supply by both increasing land devoted to animal feed crops and introducing biological improvements in feed production, management of herd sizes and sex ratios, and various combinations of those listed. At the present time, this model is used to determine critical parameters, additional data requirements and to explore, on a preliminary basis, the relative benefit/cost relationships for alternative modernization programs.

Future Work: Continued testing and refining of Macro Model II and major improvements of the model to cover other areas important to Nigerian agricultural development are planned. The traditional and alternative modern beef processing-transportation-marketing systems and crop production and processing activities closely related to beef production will probably be simulated during the next six months. Additional research and modeling efforts during the remainder of the funded period and continuing into early 1969 will extend the Macro Model II to cover selected major crop production, processing and marketing systems of the Nigerian agricultural economy. An important consideration during the remainder of the year will be to provide an orderly transition to the broader agricultural models planned for the last two years of

this project. Constructing models for the crop production and marketing sectors closely akin to the beef industry and the beef marketing system should provide an orderly transition to the overall modeling effort planned during the following two years.

Results Expected this Year: A computer model will be produced for the beef producing, marketing and processing industry of northern Nigeria and for closely related supporting industries. With this model we expect to be able to simulate the consequences through time of introducing alternative policies and programs to improve the operation of the beef and closely allied industries of northern Nigeria. The models constructed will have potential usefulness in improving policy design and program planning by enhancing understanding on the part of policy decision makers of the complex short and long run interactions involved in alternative beef modernization programs. Further, identification and elimination of key information gaps will make possible better development decisions and plans. The models are also expected to be useful in identifying high priority agricultural research endeavors in the beef and related crop sectors of the agricultural economy. The work on beef and associated activities will lay a framework for developing a broader model of the Nigerian agricultural sector. Additional work along these broader lines should flow naturally and expeditiously following the experience gained and models developed during the first year's efforts. While the effort is concentrated on Nigeria, it should be remembered that a main objective is developing models which have more general applicability to other LDCs.

Some Remarks on Utilizing Simulation Models: The current model deals primarily with the beef industry in northern Nigeria. The agency with the most potential use for this model is the Livestock Marketing Authority of Nigeria. Under AID/csd-1557, we plan to investigate the potential applicability of the model to the work of that agency. However, application work under this contract must stop at that point. Actual application would have to be carried out under separate authorization and funding, probably through the African bureau and USAID/Lagos but possibly under WOH/ARDS for the purpose of establishing the usefulness of the work under the present contract.

Investigation of the applicability of the beef simulation model under this contract will focus first on how well it produces "reasonable simulations" of the past operation of the beef industry and of the consequences of simple changes in policies and programs. The reasonableness of these simulations will be assessed by (1) comparing projections of past performance with data on actual performance and (2) having projections of the consequences of policy and program changes examined by knowledgeable Nigerians and expatriates.

Actual application of the beef simulation models produced under this contract would have to be made under a separate project funded by either host country, donor or lending agencies. Application would reveal deficiencies in the model. These would permit the model to be further improved. As the model would be improved and used to predict the consequences of programs and policies, it would help host and donor country planners and administrators see how to improve their program and policy proposals. This interaction of researchers, policy makers and program planners would be an essential application and would

be expected to improve both the policies and programs (on the one hand) and the simulation model, itself (on the other). Valuable by-products would be (1) the training of both host country and project personnel in the construction and use of simulation models and (2) the eventual development of capacity in the host country to carry out similar simulations on computer installations now being made in Nigeria.

Another application of the beef simulation model is promising to materialize in the USDA. Martin Abel of that agency is considering a study of the livestock economies of selected groups of LDCs. The Nigerian beef model can probably be used as a point of departure for making such comparative studies of the livestock economies of the LDCs.

In the next two years, it is hoped this research effort will produce a simulation model of the entire Nigerian agricultural economy. In connection with this larger model there will be opportunities to apply it which correspond to the opportunities sketched above for the beef model. These opportunities would exist (1) within the broader Nigerian planning and administrative agencies, including the Federal Ministry of Economic Development and the Federal Ministry of Agriculture and Natural Resources and (2) within such donor and lending agencies as USAID/Lagos and IBRD. As in the beef model, such applications should improve both the model and the policies and programs. Again valuable by-products would include increased skills of policy designers, program planners, researchers and others. The sectoral simulation model, like the beef model, should also be expected to have applications to other LDCs and in more general economic development studies.

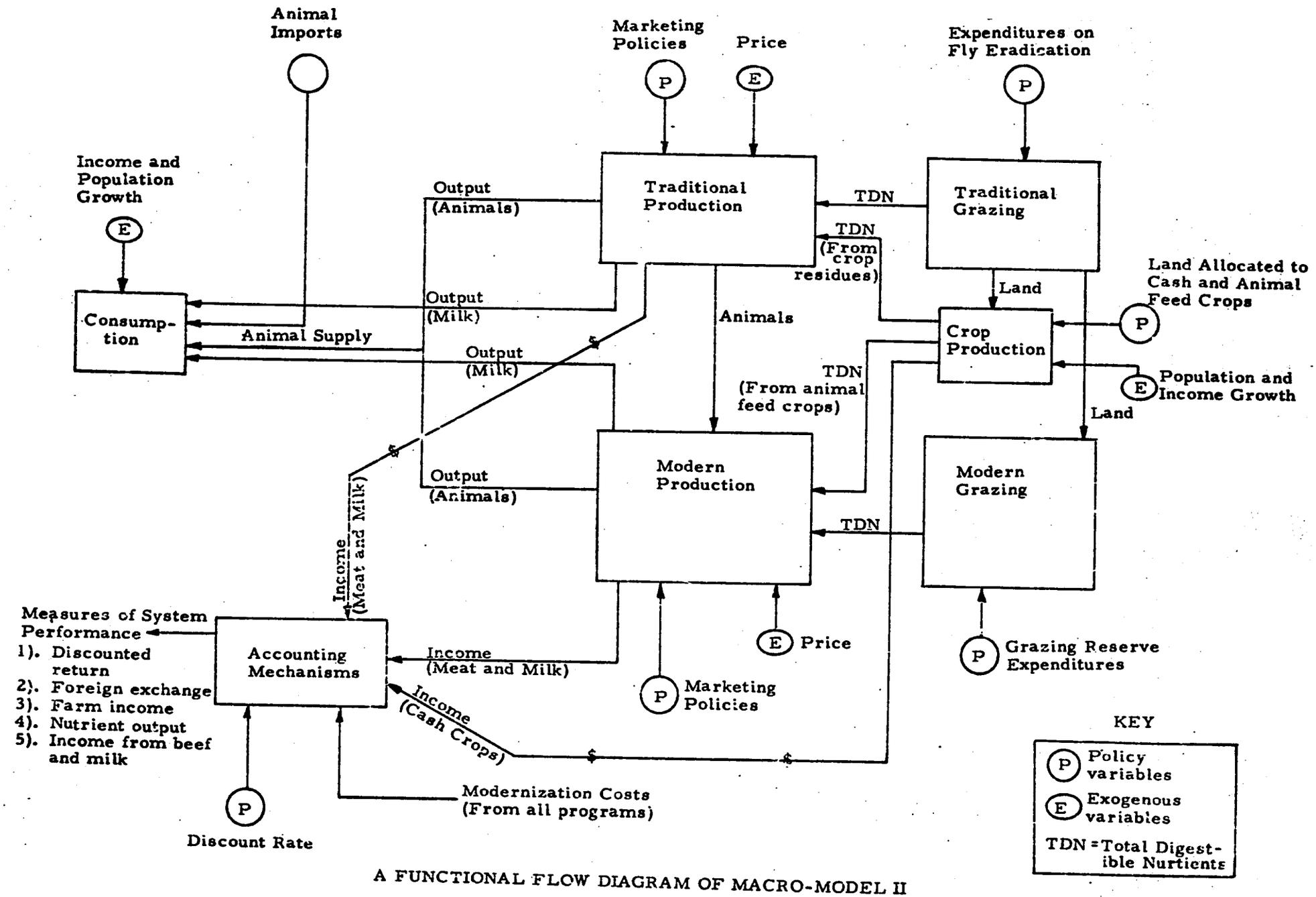

A FUNCTIONAL FLOW DIAGRAM OF MACRO-MODEL II

Figure I.

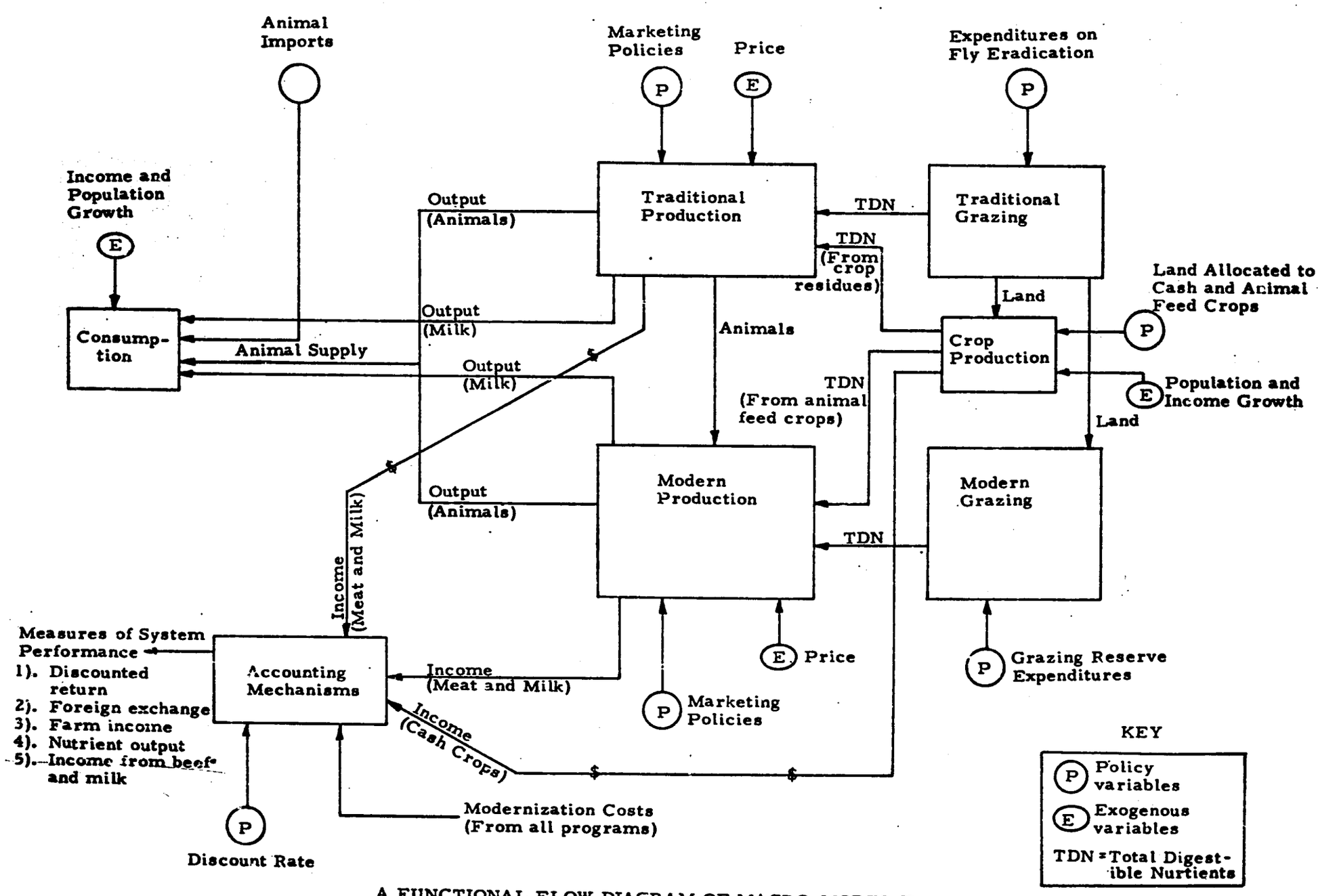

A FUNCTIONAL FLOW DIAGRAM OF MACRO-MODEL II

Figure I.

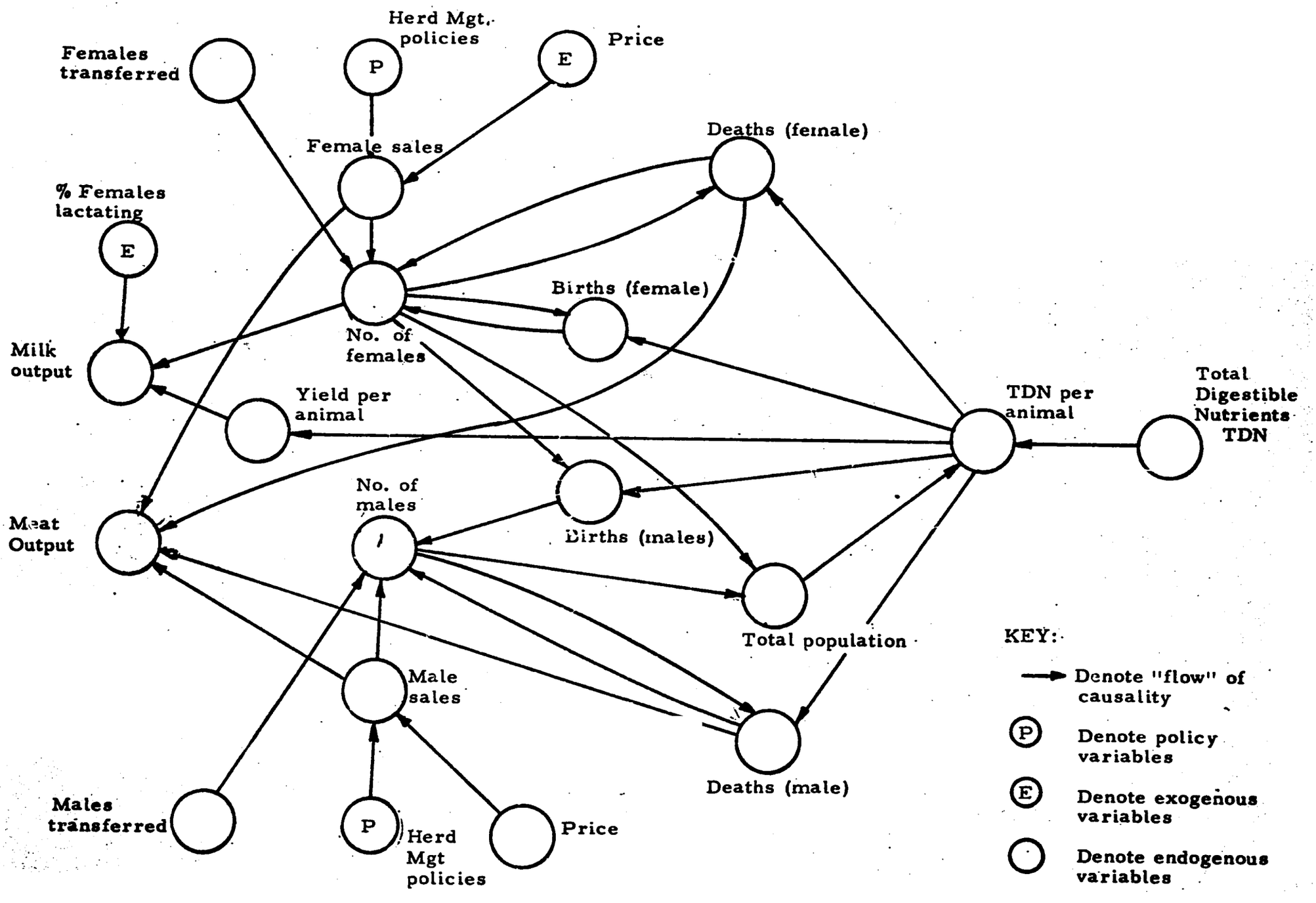

Figure 2. A Causal Map of the Production Sub-Model

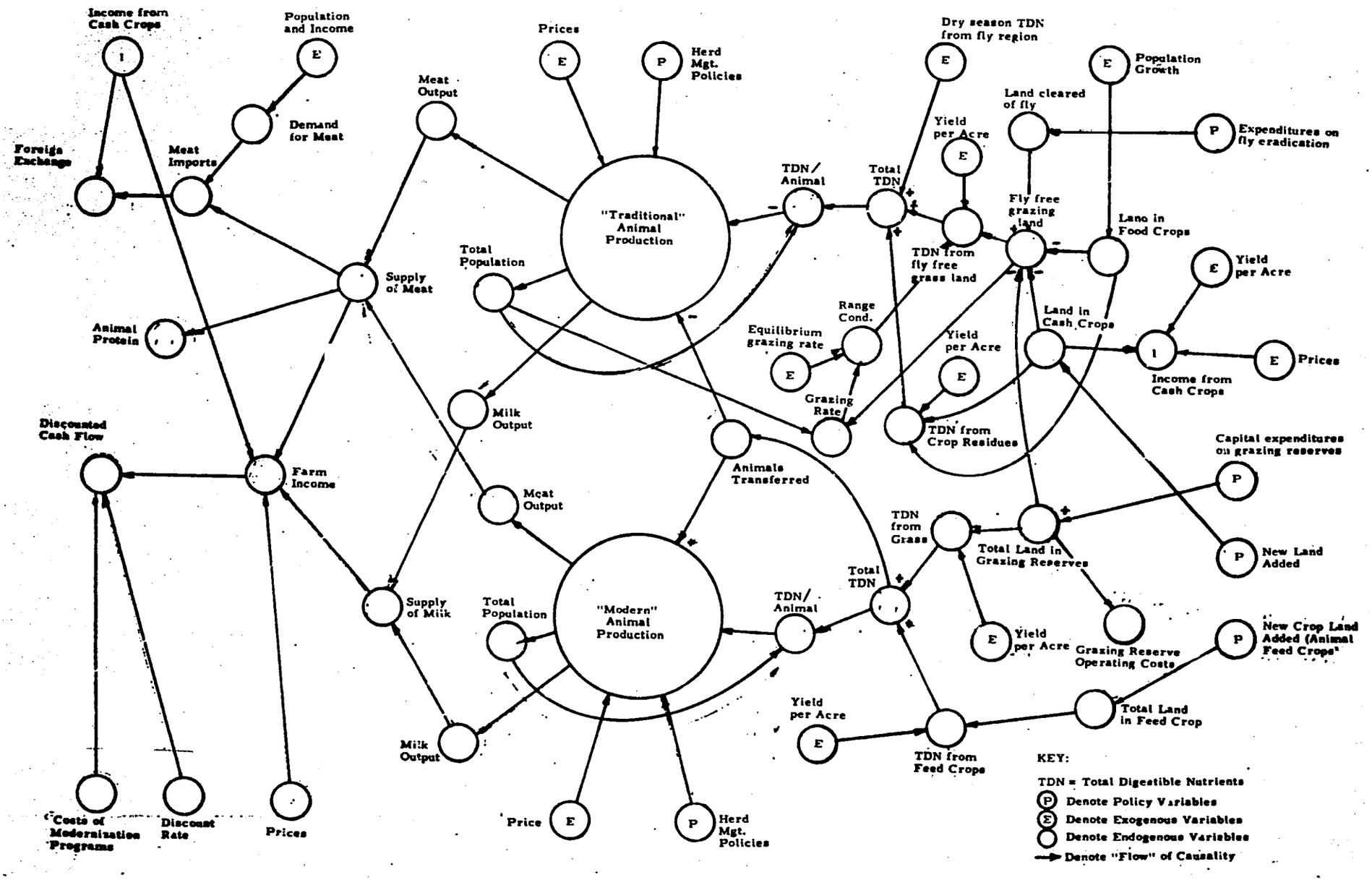

Figure 3. A Causal Map of the Beef Industry Simulation Model