AGENCY FOR INTERNATIONAL DEVELOPMENT
WASHINGTON, D. C. 20523

BIBLIOGRAPHIC INPUT SHEET

FOR AID USE ONLY

1. SUBJECT CLASSIFICATION

A. PRIMARY: Agriculture

B. SECONDARY: Crop Storage

2. TITLE AND SUBTITLE

Consultation visit with USAID/El Salvador and CENTA, a report

3. AUTHOR(S)

Delouche, J.C.; Welch, G.B.

4. DOCUMENT DATE	5. NUMBER OF PAGES	6. ARC NUMBER
1975	43 p.	ARC

7. REFERENCE ORGANIZATION NAME AND ADDRESS

Seed.Technology Laboratory, Mississippi State University, Mississippi State, Mississippi 39762

8. SUPPLEMENTARY NOTES *(Sponsoring Organization, Publishers, Availability)*

(In TA 75-09)

9. ABSTRACT

The report of two Mississippi State University seed specialists requested by the GOES (CENTA) for advice on seed processing and storage facilities under development. These plans had been based on earlier consultations made in 1968-70, and because of an expanded seed program and more favorable funding, they were able to be implemented, enlarged, and revised. The recommended revisions, presented here in drawings and specifications, are: 1) modification of approximately one-third of one conditioned storeroom into a bag-dryer; 2) rearrangement of an on-site drying system; 3) provision of a receiving area for all-weather operation; 4) provision of a small, quality control laboratory in the storage unit connected to the processing room; 5) procurement of equipment specified in Appendix I; and 6) a return by Dr. G. Burns Welch of the consulting team to El Salvador to explain changes to CENTA engineers (already arranged).

10. CONTROL NUMBER

PN-AAB-655

11. PRICE OF DOCUMENT

12. DESCRIPTORS

El Salvador
Seed production
Storage

13. PROJECT NUMBER

14. CONTRACT NUMBER

AID/ta-C-1219 GTS

15. TYPE OF DOCUMENT

AID 590-1 (4-74)

ES
631.521
D362

-ID/ta-C-1219

TA 75-09

REPORT TO
USAID/EL SALVADOR, AID/W
AND
CENTA, GOES

CONSULTATION VISIT
WITH
USAID/EL SALVADOR
AND
CENTA, GOES

Services Rendered

Under The Agreement

Between

AID/W and MSU

AID/ta-C 1219

OCTOBER, 1975

SEED TECHNOLOGY LABORATORY
MISSISSIPPI STATE UNIVERSITY
MISSISSIPPI STATE, MISSISSIPPI

REPORT TO
USAID/EL SALVADOR, AID/W
AND
CENTA, GOES

SERVICES RENDERED
UNDER THE CONTRACT BETWEEN
AID/W AND MSU
AID/ta-C-12-19

SEED TECHNOLOGY LABORATORY
MISSISSIPPI STATE UNIVERSITY
MISSISSIPPI STATE, MISSISSIPPI

OCTOBER, 1975

REPORT SUMMARY

TITLE: Consultation visit with USAID/El Salvador and CENTA, GOES

CONTRACT NO.: Mississippi State University - AID/CM/ta-C-12-19

CONSULTANTS: James C. Delouche and G. Burns Welch

PERIOD OF TRAVEL: 9 June - 1 July, 1975

SUMMARY

1. The GOES (CENTA) requested services of two Mississippi State University seed specialists through USAID/El Salvador.

2. Plans under development were based on MSU/STL plans presented 1968-1970.

3. Due to expanded seed program and more favorable funding the original plans were expanded and revised and implementation begun.

4. Some revisions of the facility were recommended by the consulting team and are reflected in the accompanying drawings and specifications.

5. Recommendations of the team (see drawings):

   a. Approximately one third of one conditioned storeroom should be modified into a bag-dryer.

   b. Rearrange drying system on site.

   c. Receiving area for all-weather operation should be provided.

   d. A small quality control laboratory should be provided in the storage unit connected to the processing room.

   e. Equipment specified in Appendix I should be procured.

   f. Dr. G. Burns Welch of the consulting team should return to El Salvador to explain changes to CENTA engineers (already arranged).

ACKNOWLEDGEMENT

The authors greatly appreciate the help and cooperation of Mr. Jack Morris, USAID/El Salvador; Ing. Ricardo Dominguez and others from the Ministerio do Agricultura y Ganaderia during our consultation visit.

TABLE OF CONTENTS

	Page
REPORT SUMMARY	ii
ACKNOWLEDGEMENTS	iii
I. BACKGROUND	1
II. NEW EXPANDED PROGRAM	2
III. CURRENT AND PROJECTED NEEDS	2
IV. OBSERVATIONS AND RECOMMENDATIONS	2
V. RECOMMENDED LIST OF EQUIPMENT AND EXPLANATION OF NEEDS AND USES	5

APPENDICES

APPENDIX I ----- EQUIPMENT SPECIFICATIONS	9
APPENDIX II ---- REVISED DRAWINGS	19

CONSULTATION VISIT
WITH
USAID/EL SALVADOR AND CENTA, GOES

July 20 - 29, 1975

BACKGROUND

The GOES (CENTA) requested services of two seed specialists under contract AID/ta-C-1219 between AID and Mississippi State University for purpose of advising CENTA on seed processing and storage facilities under development. James C. Delouche and G. Burns Welch, Seed Technology Laboratory, MSU were nominated for the assignment, and authorized by TAB/AGR to provide the service requested. They departed MSU campus on July 20 and returned July 29, 1975.

The seed facilities presently under development in El Salvador are based on recommendations, designs, and specifications formulated during several technical assistance missions of MSU seed specialists to El Salvador during the period 1968-70 under terms of Contract AID/ta-C-1219's predecessor (contract AID-W-607).

Because of financial limitations, the original plans (1968-70) were to renovate and remodel a small existing facility so as to provide for greatly expanded seed processing and storage operations. Remodeling was initiated but shortage of funds did not permit much work. From about 1970 until 1975 work on development of improved seed facilities was suspended.

In 1975 additional (and adequate funds) were made available to the Departments Incrementacion y Certificacion, CENTA, for development of new facilities. In view of the substantial increase in programmed and projected seed production, and the further deterioration of existing seed facility, the decision was made to move seed center to another site and establish entirely new facilities. The original plans and designs were expanded and revised and implementation was begun. Some construction (seed storerooms) was underway at time of this consultation visit.

NEW EXPANDED PROGRAM

Following briefing by Jack Morris, Ag Officer, USAID/El Salvador, we met and worked with Ing. Ricardo Dominguez, Jefe, Depto. Incrematacion y Certificacion, Ing. M. Martinez, Depto. Planificacion, Dr. Cristates, Director, CENTA (briefly), and the architects for the new facilities.

The new facilities are being established at a different site on the San Andres experimental farm. Main features of the new facilities are:

(1) Seed Storage -- Four conditioned seed store rooms had been designed (one under construction). Each storeroom has a capacity of about 12,000 qq. and will be conditioned independently of others. The storerooms are well designed with adequate insulation and refrigeration capacity. Design con-

ditions for the storerooms are maximum of 20oC and 55% relative humidity. A common entry has been designed to serve the four storerooms.

(2) Drying System -- The design of the drying system closely followed the original 1968-70 design. The system consists of six (6) 14 ft. diameter round metal drying bins grouped in two sets of two bins each (i.e., set consists of two bins serviced by one heater-fan drying unit), and two independent drying bins (i.e., one bin, one heater fan unit). These drying units are coupled with loading and unloading system, maize sheller, and two hopper bottom bins for holding of shelled maize seed.

(3) Processing-Cleaning Plant -- The original 1968-70 design was used. In this design, an air screen cleaner, disc separator, precision graders, gravity table, treater and packaging system are linked with surge bins and elevators to provide for continuous flow operation.

(4) Offices-Unconditioned Storage -- Space adjacent to the processing plant is provided for several offices, a small quality control laboratory, and unconditioned storage of packaged seed prior to its transfer to the conditioned storeroom.

(5) Site -- The new location provides ample space for parking, turnaround of trucks, and other activities. The site has been graded and will be most attractive when fully developed.

CURRENT AND PROJECTED NEEDS

A project covering the development and promotion of production and use of improved seed in El Salvador has been prepared by the Oficina de Planificacion Institucional (CENTA) and the Oficina Sectorial de Planificacion Agropecuaria (MAG). This project entitled "Fomento de la Produccion de Semilla Mejorada (June, 1975)" projects the need for improved seed over a five year period. Quantities projected at end of five year period are (approximately):

Maize Seed.....20,000 qq.
Bean Seed.....7,500 qq.
Rice Seed.....7,500 qq.
Sorghum Seed.....10,000 qq.

There quantities of seed are much greater than provided for in the 1968-70 designs and plans.

In our opinion the goals are reasonable and if met will contribute substantially to agricultural development in El Salvador.

OBSERVATIONS AND RECOMMENDATIONS

Conditioned Storerooms

The conditioned storerooms are well designed. Several suggestions were made

to architects regarding installation of insulation.

In our view the capacity of the conditioned storerooms is somewhat greater than needed. Since drying capacity is not as flexible as desirable, we proposed modification of portion (about 1/3) of one of the conditioned storerooms into a sack dryer. This dryer would provide great flexibility for drying small lots of breeder and foundation seed with minimal risk of varietal mixture.

> RECOMMENDATION 1. Approximately one-third of one conditioned storeroom should be modified into sack-dryer. (See drawings 1, 2, 7, 8 and 9.

Modification proposed will involve only deletion of walls on dryer portion and construction of plenum and drying ports. It will not affect the basic architectural design of storeroom, or its location.

Drying-Shelling System

The drying-shelling system as originally designed and slightly modified by CENTA architects is generally adequate, but not well arranged vis a vis the processing plant and facility site. Sufficient room was not provided for loading and unloading, and the maize sheller was positioned between the drying system and processing plant which will clog vital service area with cobs and other refuse. Also, the handling system for loading and unloading the drying bins was not adequate for the quantities of seed projected.

We proposed rearrangement of the drying system and processing plant on the site, reversal of the maize shelling unit, and a better loading, unloading and conveying system.

> RECOMMENDATION 2. Rearrange drying system on site vis a vis the processing plant, reposition maize sheller unit, and substitute more modern, flexible loading, unloading and conveying system. (See drawings 1, 2, 3 and 4)

Processing Plant

The processing plant as presently designed is generally adequate. However, we proposed some rearrangement of equipment, and addition of an adequate, modern, receiving area. This receiving area should be equipped with a vibro-dump pit, high capacity scalper, and necessary elevators. It should also be enclosed with roof and side wall to provide for all-weather operation. The dimensions of the processing room are unchanged. We also proposed the incorporation of a small quality control laboratory in the unconditioned storage unit adjacent to the processing room, in addition to offices already provided for.

> RECOMMENDATION 3. A modern, adequate receiving area (enclosed for all-weather operation) should be provided for between drying system and processing room. Receiving area should be equipped with vibro-dump pit, high capacity scalper, and necessary elevators. Small quality control laboratory should be provided for in storage unit connected to processing room. (See drawings 1, 2, 3, and 4).

Equipment

The recommendations above as well as the plans already being implemented require the procurement of necessary equipment. The equipment recommended for the facilities is specified and costed (estimated) in Appendix 1.

> RECOMMENDATION 4. The equipment specified in Appendix 1 should be procured for the new seed facilities in El Salvador.

Equipment specified in Appendix I are listed, costed (estimated), and uses/need explained in Table 1. The "Item Nos." refer to numbers on equipment shown in attached drawings (except Nos. 45-51).

In addition to equipment specified and design modifications suggested, CENTA will also want to procure various miscellaneous items, as needed, such as seed moisture tester, small balance and gram scale, weight per hectoliter (or pounds per bushel) tester, magnifying glasses on stand, dockage sieve set, seed sample pans, etc. for use in quality control section of the seed operation.

Follow-up Consultation Needed

In view of the extensive changes proposed in layout and design of seed drying, shelling and processing plant portions of facility and extensive list of equipment, we belive that follow-up consultation is needed to explain over-all concept and clarify details. This consultation can be made under terms of Contract AID/ta-C-1219 (Seed Program Development) between AID/W/TAB and Mississippi State University. About 2-3 days discussions with CENTA officials and architects should be sufficient. Dr. G. Burns Welch of our staff made most of design changes and is logical person to undertake follow-up consultation visit to El Salvador.

Procedure for obtaining services of Miss. State University seed specialist under Contract AID/ta-C-1219 is for USAID/Mission (El Salvador, in this case) to request services through its regular communication channel in AID/W. Request is then directed to action officer (contract manager) in TAB/AGR who (if he approves) relays request to MSU and authorizes assistance requested. Under current terms of Contract AID/ta-C-1219, services are available at no cost to mission. Contract funds cover international travel, per diem, and salary.

TABLE 1

Recommended List of Equipment
and
Explanation of Need and Uses
(Seed Appendix 1 for Specifications)

Item No.*	Description	Est. Cost US$ FOB, Supplier
1	Vibrating-dump pit, for efficient receiving of raw seed (except ear corn).	2,100.00
2	Belt-bucket elevator, high capacity for feeding raw seed from dump pit to scalperator for rough cleaning.	2,800.00
3	Scalper, high capacity rough cleaner to remove foreign material and dust before conveying seeds to drying bins and/or processing line.	8,600.00
	Note: Items 2, 3, and 4 are highly desirable but not essential; they can be deleted in event of shortage of funds.	
4	Vibrating spout conveyor for conveying clean seed discharged from scalperator back into receiving pit.	650.00
5	Belt-bucket elevator, main receiving elevator, high capacity for rapid movement of seed to drying and storage bins.	4,400.00
6	Conveyor, drag-flight type; all weather, enclosed tube horizonal conveyor to move seed from main receiving elevator (Item 5) to conveyor above 3 bins in row.	2,500.00
7	Conveyor of same type as Item 6 to convey and discharge seed into any of three bins in row; much longer	6,000.00
8	Conveyor of same type as Items 6 and 7, except reversible, for conveying seed from Item 7 conveyor to each of three bins in row, and shelled corn from shelling area back into processing plant via Item 20 conveyor.	7,500.00
9	Conveyor of same type as Items 6 and 7, to convey seed from Item 8 into seed processing room.	2,900.00
10	Drying/storage bins, 14 ft. diameter; 14 ft. height at eave; six (6) drying storage bins for drying and/or aeration and bulk storage of all kinds of seed including ear corn. (about $3,800 each).	22,800.00

* Refers to identification number on equipment in attached blueprints

Recommended List of Equipment - continued

Item No.	Description	Est. Cost US$ FOB, Supplier
11	Heater-fan units for drying system on two bins. (about $3,900 each unit).	7,800.00
12	Heater-fan units, for seed drying, larger than Item 11, for 2 sets of 2 bins each (2 units at $4,000/unit).	8,000.00
13	Inclined belt-type conveyors (2) for loading ear corn into drying bins (about $1,000 each).	2,000.00
14	Belt conveyor, reversible, high capacity, 52 ft. long, all weather for conveying seed discharged from bottom of drying bins; ear corn to shelling area; other seed to receiving pit.	3,800.00
15	Belt conveyor, for inclined conveying of ear corn from Item 14 belt to top of sheller.	1,700.00
16	Receiving and holding bin for shelled corn seed; local fabrication in El Salvador.	250.00
17	Corn sheller, type best for seed corn; for shelling corn seed.	5,000.00
18	Same type conveyor as Item 13; to convey cobs into collection wagon.	700.00
19	Belt-bucket elevator, 34 ft. high; all weather housing; to collect shelled maize discharged from sheller and elevator into discharge of Item 20 for conveying of maize to processing.	2,400.00
20	Conveyor, horizonal, drag flite type (similar to Items No. 6-9); to convey shelled corn seed from discharge of elevator (Item 19) to horizonal, reversible conveyor (Item 8) for movement back to processing.	1,700.00
21	Receiving, holding bin for uniform feeding of air-screen cleaner; local fabrication in El Salvador.	400.00
22	Basic seed cleaner, 2 air systems, four screens.	10,000.00
23	Dust collector for Item 22.	1,200.00
24	Elevator, belt bucket type, to lift clean see. from basic air-screen cleaner to surge bin above disc, or width-thickness grades.	2,200.00

Recommended List of Equipment - Continued

Item No.	Description	Est. Cost US$ FOB, Supplier
25	Receiving, holding bin above disc separator; local fabrication.	200.00
26	Disc separator, for separating short material (broken rice) from good seed.	4,200.00
27	Elevator, belt and bucket type, to lift clean seed from disc.	1,800.00
28	Receiving and holding bin, for uniform feed of seed into width and thickness graders; local fabrication.	250.00
29	Width and thickness graders; for separating corn seed into round and flat graders; other width and thickness separations. (need 2); with cylinders.	5,400.00
30	Same as Item 29	5,400.00
31, 32, 33, 41, 42.	Receiving, holding bins, for receiving graded seed of corn, all other kinds of seed prior to treating or packaging; local fabrication. (about $350/each).	1,750.00
34	Conveyor, horizonal, for use beneath bins above.	1,000.00
35	Belt-bucket elevator, for elevating seed discharged from Item 34 conveyor.	1,600.00
36	Bin for waste product from gravity table separation; local fabrication.	250.00
37	Belt-bucket elevator for lifting waste from gravity table to holding bin for disposal.	1,400.00
38	Receiving, holding bin, for clean seed from gravity table; local fabrication.	350.00
39	Gravity separator, for separation of rotten, deteriorated, insect damaged seed from good seed.	3,400.00
40	Elevator, belt-bucket type, for lifting good seed from gravity separator to holding bin for treating and/or packaging.	1,600.00
41	See Item 31	
42	See Item 31	

Recommended List of Equipment - continued

Item No.	Description	EST. Cost US$ FOB, Supplier
43	Seed treater, slurry type, for applying seed treatment materials to seed.	2,800.00
44	Elevator, belt-bucket type, for lifing treated seed to holding bin for packaging.	1,600.00
45	Seed weigher-bagger-sewing system; for weighed packaging of seed.	4,000.00
46	Vacuum cleaner, heavy duty (2)	1,300.00
47	Hand blower, for clean-up (2)	400.00
48	Bag truck, 2-wheel, for moving seed in sacks (4)	400.00
49	Platform bag truck, 4-wheel, for moving seed in bags (3)	900.00
50	Platform scale, for weighing bag of seed (2)	800.00
51	Miscellaneous items for elevators	1,000.00
52	Other miscellaneous items	- - - -
53	Heater-fan unit for sack dryer	3,900.00
	Total FOB Supplies	$153,100.00

APPENDIX I.

EQUIPMENT SPECIFICATIONS FOR SAN ANDRES (CENTA) SEED FACILITY

Item No.*	Description	No. Required
1.	Custom-built dump for seed with attached shaker discharge spout. Dump hopper to be of slant wall type; 10 ft. long 7 ft. wide, and 4 ft. deep exclusive of shaker spout; 150 bushel capacity; constructed of 11 guage steel, completely seam welded; entire unit supported from an angle iron framework around top. Shaker spout, all metal, with eccentric drive, leak-proof, self-cleaning; equipped with shut-off slide and handle; 6 inches deep at shallow end and pitched 1½ inches per foot toward discharge; discharge spout 18 inches wide and 18½ ft. long; securely mounted beneath bottom opening of dump hopper. Dump hopper and shaker spout complete with drive and TEBB motor of required horsepower operational on 230V., 60 Hz., three phase. SOLE BRAND: Clipper Vibro-Pit Recommended Supplies: Ferrell-Ross (See list of Suppliers) Estimated Cost, FOB Supplier $2100.00	1
2.	Elevator, Belt-Bucket Type; 27 ft., 6 inches discharge height; 1000 bushels per hour capacity at belt speed of 132 ft. per minute and 6 inch bucket spacing; all metal construction; complete with required belting, buckets, splicers, assembling hardware, and: (a) Dump hopper (b) Bottom boot cleanout with 4 inch legs (c) C.I. adjustable elbow, 8 inches (d) Two (2) 8 inch clamp rings (e) 10 ft. flexible spouting, 8 inch (f) 10 ft. of 8 inch rigid spouting (12 guage) flanged both ends (g) 1½ h.p. drive, 230 v., 60 Hz.; V-belt to shaft mounted reducer with back stop and shaft mount gear reducer tie rod bracket; motor equipped with magnetic starter. (h) Replacement parts (drive belts, belting, extra buckets) at suppliers discretion not to exceed $200. Preferred Brand: Universal Industries Model D-100 "Easy Dump" Suppliers: Universal Industries Burrows Equipment Company Seedburo Ferrell-Ross Mercator Corporation Estimated Cost, FOB Supplier $2,800.00	1

*Refers to identification numbers in attached blueprints.

Item No.	Description	No. Required
3.	Scalper (rough cleaner), high capacity; 3000 to 4000 bushels seed per hour; all metal construction. Equipped with squirrel cage scalping reel to remove large material from seed; re-scalping (2nd) reel to salvage good seed taken out with large material; aspiration system to remove light-weight material; of closed circuit, re-circulating air type; adjustable air volume control; seal gate feed into aspiration system; screw conveyor discharge of light screenings. Complete with screens of size used for rice; 4 h.p. electric motor, 220 v., 60 Hz., 3 phase; magnetic starter; motor mount and drive; replacement parts selected by supplier not to exceed $300. Preferred Brand: Carter-Day Closed Circuit Scalperator, 24" x 60" size Supplies: Hart-Carter Americas, sole supplier Estimated Cost, FOB, Supplier $8,600.00	1
4.	Conveyor, vibrating; all metal construction; self-cleaning; vibrating spout in integral frame suitable for mounting under discharge of machine; spout 8 inches wide; overall length from top of discharge to end of rear frame is 83 3/8 inches; overall depth 11 5/8 inches; overall width, 13 1/8 inches; with 1/3 h.p., 115/230 v, 60 Hz. motor. Preferred Brand: Ferrell-Ross Vibrating Conveyor No. 9 Width Supplier: Ferrell-Ross (Sole Supplier) Estimated Cost, FOB Supplier $650.00	1
5.	Elevator, Belt-Bucket type; 44 ft. discharge height; 1000 bushels per hour capacity at 132 ft. per minute belt speed and 6 inch bucket spacing; all metal construction; complete with: (a) Two (2) metal dump hoppers (b) Bottom boot cleanout with 4 inch legs (c) Off-set two way valve, 8 inch, with adapter and transition (d) Four (4) eight (8) inch C.I. adjustable elbow (e) Four (4) eight (8) inch clamp rings (f) Ten (10) ft. flexible 8 inch spouting, metal (g) Six (6) 8 inch loose flanges (h) Service ladder (12 ft.) (i) Safety cage (12 ft.) (j) Weather and dust sealing (k) Ten (10) cartridges of mastic (l) Three (3) 10 ft. sections of rigid, 8 inch metal spoutin (12 guage), flanged both ends (m) Eight (8) inch "dead stop" (n) One (1) drive guard (for 2 h.p.)	

Item No.	Description	No. Required

(o) 2 h.p. drive, 230 v., 60 Hz., 3 phase, V-belt to shaft mounted reducer, complete with backstop and shaft mounted gear reducer tie rod bracket; motor mount and magnetic starter
(p) Replacement parts to be selected by manufacturer (drive belts, belting, extra buckets, etc.) but not to exceed $200.

Preferred Brand: Universal Industries
Model D-1000, "Easy Dump"

Suppliers: Universal Industries
Ferrell-Ross
Burrows
Mercator Corporation

Estimated Cost, FOB Supplier $4,400.00

6. Conveyor Drag-Flight Type, reversible flow: 9 inch size; 1900 cu. ft. hr. capacity; high density polyethylene flights mounted on sprocket driven chain convey seed in formed U-trough; trough of 12 guage metal; fitted with quick-release 14 guage all-weather cover. REVERSIBLE FLOW TYPE: To consist of following (approx. 22 ft. over-all length): 1

(a) One (1) standard 10 ft. long section including chain, flights, cover and supports
(b) One (1) intermediate 8 ft. section, including chain, flights, cover and supports
(c) One (1) standard by-pass inlet
(d) One (1) take-up head section
(e) One (1) transition to connect fixed head discharge outlet to standard by-pass inlet.
(f) One (1) transition to connect take-up head section outlet to regular inlet with baffle
(g) 3 h.p., 230 v., 60 Hz., 3 phase, motor and drive with magnetic starter.

Preferred Brand: Peerless Drag-Flite Conveyor, or
Screw Conveyor Super-Flo

Suppliers: Essmueller Co. (Peerless)
Screw Conveyor Corporation
Burrows

Estimated Cost, FOB Supplier $2,500.00

7. Conveyor, Drag-Flight Type; one direction flow, 9 inch size; 1900 cu.ft.hr. capacity; high density polyethylene flights mounted on sprocket driven chain convey seed in formed U-trough; trough of 12 gauge metal fitted with quick-release cover of 14 guage metal, all-weather; to consist of following (approx. 58 ft. over-all length): 1

(a) Five (5) standard 10 ft. sections including chain, flights, cover and supports

Item No.	Description	No. Required

(b) One (1) 4 ft. intermediate section, with chain, flights, cover and supports
(c) One(1) standard by-pass inlet
(d) Three (3) standard intermediate discharge spouts, with rack and pinion curved slide, hand wheel operated
(e) Three (3) two-way offset lockout valves sized to fit intermediate discharge spouts.
(f) One (1) take-up head section and contoured tail section
(g) 3 h.p., 230 v., 60 Hz., 3 phase motor and drive with magnetic starter.

Preferred Brand: Peerless Drag-Flite Conveyor, or Screw Conveyor Super-Flo

Suppliers: Essmueller Co. (Peerless)
Screw Conveyor Corporation
Burrows

Estimated Cost, FOB Supplier $6,000.00

8. Conveyor, Drag-Flight Type; reversible flow; 9 inch size; 1900 cu. ft. hr. capacity; high density polythylene flights mounted on sprocket driven chain convey seed in formed U-trough; trough of 12 guage metal with quick-release, all weather, 14 guage metal cover. To consist of the following (approx. 70 ft. overall length)

(a) Six (6) standard 10 ft. long sections with chain, flights, cover and supports
(b) One (1) 4 ft. intermediate section with chain, flights, cover and supports
(c) One (1) standard by-pass inlet.
(d) One (1) regular inlet with baffle.
(e) Four (4) standard intermediate discharge spouts with rack and pinion slide, hand wheel operated
(f) Three (3) two-way offset lockout valves sized to fit intermediate discharge spouts.
(g) One (1) take up head section
(h) One (1) fixed head shaft section
(i) 3 h.p. motor, 230 v., 60 Hz., 3 phase, and drive with magnetic starter.

Preferred Brand: Peerless Drag-Flite Conveyor or Screw Conveyor Super-Flo

Suppliers: Essmueller Co. (Peerless)
Screw Conveyor Corporation
Burrows

Estimated Cost, FOB Supplier $7,500.00

9. Conveyor, Drag Flight-Type; one direction flow; 9 inch size; 1900 cu.ft.hr. capacity; high density polyethylene flights mounted to

Item No.	Description	No. Required
	sprocket driven chain convey seed in formed U-trough; trough of 12 guage metal with quick-release, all-weather, 14 guage metal cover. To consist of following (approx. 36 ft. overall length): (a) Three (3) standard 10 ft. sections with chain, flights, cover and supports (b) One (1) standard by-pass inlet. (c) One (1) transition to connect slidegate discharge outlet to standard by-pass inlet (d) One (1) standard head and tail sections (e) 3 h.p. motor, 230 v., 60 Hz., 3 phase, and drive with magnetic starter. Preferred Brand: Peerless Drag-Flite, or Screw Conveyor Super-Flo Suppliers: Essmueller Company Screw Conveyor Corporation Burrows Estimated Cost, FOB Supplier $2,900.00	
10.	Drying and storage bin; round type; made up of corrugated metal; 14 ft. diameter; 5 standard rings high plus foundation ring for eave height of 14 ft. 10 inches; with centerfill ventilator, roof ladders, roof manholes, 2-ring walk-in door, door boards; perforated flooring as follows: (a) Walk-in door in 2nd and 3rd rings (b) Foundation ring with air entrance frame (c) Channelox drying floor with flashing and hardware (d) Outside side wall ladder (e) Tube-well bin unloading kit (f) Extra walk-in door (g) Fan transition (h) Inside ladder (i) Extra roof manhole Preferred Brand: Read Steel Products Reed-Joseph Colombia Suppliers: Read Steel Products Reed-Joseph Columbia Estimated Cost, FOB Supplier $22,800.00 ($3,800.00 each)	6
11.	Heater-Blower unit, for drying seed or grain; heater to be diesel oil burner modified to deliver 136,000 BTU's/hour; fan to be of centrifical type capable of delivering 6,200 cfm air at 3.25 in. static pressure; standard controls and safety devices; stemmed thermometer; all necessary electrical starters and mechanical	2 units

Item No.	Description	No. Required
	drive components; electric drive motor to be sized to meet specifications (CFM), probably 5 h.p., operable on 230 v., 60 Hz., 3 phase; spare parts as selected by supplier on basis of experience but not to exceed $200/unit. Preferred Brand: American Drying Systems Model No. 675 (modified) Suppliers: American Drying Systems Read Steel Products Campbell Estimated Cost, FOB Supplier $7,800.00 ($3,900.00/unit)	
12.	Heater-Blower unit for drying seed or grain; heater to be diesel oil burner modified to supply 272,800 BTU's/hour; blower or fan to be of centrifical type capable of delivering 12,400 CFM at 3.25 in. static pressure; standard controls and safety devices; stemmed thermometer; all necessary electrical starters and mechanical drive components; electric drive motor to be size to meet specifications (CFM), probably 7½ h.p., operable on 230 v., 60 Hz., 3 phase. Spare parts as selected by supplier but not to exceed $200/unit. Preferred Brand: American Drying Systems Model No. 810 (modified) Suppliers: American Drying Systems Read Steel Products Campbell Estimated Cost, FOB Supplier $8,000.00 ($4,000.00/unit)	2
13.	Conveyor, Belt-Type, with flights or belt for conveying ear corn; aluminum construction; 24 ft. length; 6 in. wide belt 4 ply, neoprene impregnated; belt flights 1 inch high, riveted to belt every 12 inches; corded rubber head pulley drive; with following: (a) Overhead motor mount. (b) Dolly, less wheels (c) 3/4 h.p. motor with sheave and drive belt (115/230 v., 60 Hz.) (d) Replacement parts selected by supplier not to exceed $50/conveyor Preferred Brand: Burrows, Series 2500 Suppliers: Burrows Seedburo Estimated Cost, FOB Supplier $2,000.00 ($1,000.00 per unit)	2
14.	Belt Conveyor, Horizonal; REVERSIBLE DIRECTION; 52 ft. length center-to-center; dual roll idlers to trough shape belt; 12 inch belt of 2-ply nylon, rubber coated; belt speed, 500 FPM; head shaft speed, 150 RPM; rated capacity of 2400 cubic ft. of granular material per hour; channel beam frame construction, with:	1

Item No.	Description	No. Required

(a) One (1) discharge housing
(b) One (1) drive guard
(c) Trough weather cover (hinged)
(d) Flat frame cover
(e) Three (3) trough hoppers with belt seals
(f) Suppliers recommended motor and drive, operable on 230 v., 60 Hz., 3 phase, with magnetic starters
(g) Replacement parts selected by supplier but not to exceed $200

Preferred Brand: Universal Industries
Dual Idler
Belt Conveyor
Model No.3220-12

Suppliers: Universal Industries
Ferrell-Ross
Burrows

Estimated Cost, FOB Supplier $3,800.00

15. Belt conveyor, inclined; for conveying ear corn; 20 ft. length; metal frame for permanent installation; capacity of 250-300 bushels of ear corn per hour at 40° slope; complete with drive and motors operational on 230 v., 60 Hz., 3 phase. 1

Preferred Brand: Equipment Specialists, Inc. (sole supplier)

Supplier: Equipment Specialists, Inc.

Estimated Cost, FOB Supplier $1,700.00

16. Bin, metal construction, 3 ft. x 3 ft. x 2 ft. deep; exclusive of hopper bottom sides to be tapered at 45° angle to 12 in. square opening. 1

Supplier: To be locally fabricated in El Salvador

Estimated Cost $250.00

17. Corn sheller; sheller to be suitable for seed corn; 250-300 bushels per hour shelling capacity; as determined from inlet end of sheller, grain discharge to be left hand, fan discharge to be over to right, cylinder rotation to be running to right; with motor of required horse power operable on 230 v., 60 Hz., 3 phase; with magnetic starter. 1

Preferred Brand: Western No.4 Sheller

Suppliers: Union Iron Works
Corn States Hybrid Service
Burrows
Seedburo

Estimated Cost, FOB Supplier $5,000.00

Item No.	Description	No. Required
18. See Note 1 At End	Conveyor, Belt; portable; with flights on belt for conveying cobs; aluminum construction; belt 6 inches wide with 1 inch flights spaced at 12 inches; 4-ply belt neoprene impregnated; corded rubber bead pulley; 20 ft. in length; with: (a) Overhead motor mount (b) ½ h.p. motor; with sheave and drive belt; 115/230,60 Hz., Preferred Brand: Burrows Series 2500 Belt Conveyor Suppliers: Burrows Seedburo Estimated Cost, FOB Supplier $700.00	1
19.	Elevator, Belt-Bucket Type; for seed; 230 cubic feet per hour capacity with 75% bucket filling and belt speed, 110-125 FPM; bucket spacing 4¼ inches; metal construction; 34 ft. discharge height; complete with: (a) Dump hopper on up-leg (b) Bottom boot cleanout with 4 in. legs (c) Offset two-way valve, 6 in., with adapter and transitions (d) Two (2) C.I. adjustable elbows, 6 in. (e) Six (6) clamp rings (6 in.) (f) Five (5) ft. flexible metal spouting, 6 in. (g) Six (6) 6 in. loose flanges (h) Service platform (i) Service ladder (28 ft.) (j) Safety cage (25 ft.) (k) Weather and dust sealing (l) Ten (10) cartriges of mastic (m) One (1) 10 ft. section of 6 in. rigid metal spouting (12 guage) flanged at both ends (n) One (1) drive guard (o) ½ h.p. motor, 110/230 v., 60 Hz., one phase, and magnetic starter (p) Replacement parts selected by supplier (drive belts, belting, buckets) not to exceed $150.00. Preferred Brand: Universal Industries Model C2-175 (Easy Dump) Suppliers: Universal Industries Burrows Seedburo Estimated Cost, FOB Supplier $2,400.00	1
20.	Conveyor, Drag-Flite Type; one direction flow; 9 inch size; 1900 cubic feet per hour capacity; high density polyethylene flights mounted on sprocket driven chain convey seed in formed U-trough; trough of 12 guage metal; fitted with quick release 14 guage all-weather cover. To consist of following (approx. 14 ft. length):	1

Item No.	Description	No. Required

(a) One (1) standard 10 ft. section with chain, flights, cover and supports.
(b) One (1) standard by-pass inlet
(c) Standard take-up head section and contoured tail section
(d) Manufacturer's recommended motor and drive operable on 220 v., 60 Hz., 3 phase, with magnetic starter.

Preferred Brand: Peerless Drag Flite, or Screw Conveyor Super-Flo

Suppliers: Essmueller Company
Screw Conveyor Corporation
Burrows
Seedburo

Estimated Cost, FOB Supplier $1,700.00

21. Bin, Metal, for holding seed above air-screen cleaner; with framing for support from floor; bin dimensions to be 6 ft. square 4 ft. deep exclusive of hopper bottom; hopper bottom walls to be 50° angle tapering to 6 in. x 24 in. centered opening with slide gate shutoff. — 1

Supplier: To be fabricated locally according to design and specifications in Drawings No. 6 and 10.

Estimated Cost, Local $400.00

22. See Note 2 at end — Seed Cleaner, Air and Screen Type; cleaner to have four screens with adjustable shoe shake and screen pitch; two independent adjustable air systems (upper and bottom air); screen frame size 42 in. x 60 in. with synchronized brush type screen wipers. Over-all cleaner dimensions (extremes): 152½ in. long; 76 in. wide; 98½ in. height. Average capacity of 60-100 bushels per hour of clean seed. Complete with: — 1

(a) Roll-feed hopper
(b) Fans mounted 45o angle to rear
(c) Fan outlets to have square to round adapters
(d) Screen knockers on top screens
(e) Waste products discharge on right side
(f) Vibrating spout to discharge clean seed on left side
(g) Supplier recommended motor and drive operable on 220/440 volt, 60 Hz., 3 phase, with magnetic starter and motor mount
(h) Safety guards and framing
(i) 12 screens, sizes to be selected by purchaser to complement existing inventory of screens.

Preferred Brand: Ferrell-Ross Super X 29-D or Crippen H-442

Suppliers: Ferrell-Ross
Crippen Mfg. Co.
Mercater Corp.

Estimated Cost, FOB Supplier $10,000.00

Item No.	Description	No. Required
23. See Note 2 at end	Dust collector, cyclone type; all metal; collector No. 16 size for one collector use with item no. 22 (air-screen cleaner); 18 in. pipe; 4600 CFM; standard guage metal. Dust collector(s) be of type for use with cleaner in Item 22.	1

Preferred Brand: Ferrell-Ross, No. 16
Crippen

Suppliers: Ferrell-Ross
Crippen
Mercator Corporation

Estimated Cost, FOB Supplier $1,200.00

24.	Belt-Bucket elevator; 34 ft. discharge height; self-supporting; all metal construction except belting; 175 bushel of seed per hour at 75% bucket fill; belt speed, 110-125 FPM; 4¼ in. bucket spacing; complete with following:	1

(a) Dump hopper
(b) Bottom boot cleanout with 4 inch legs
(c) Required buckets, splicing, pre-punched belting and assembling hardware; with spacers for insertion behind buckets (washer type)
(d) One (1) two-way offset valve, 6 in. diameter; with adapter and transition
(e) Six (6) in. diameter adjustable elbow
(f) Six (6) ft. of flexible metal spouting, 6 in. diameter; with two (2) loose 6 in. flanges.
(g) 10 ft. of rigid metal spouting, 6 in. diameter; flanged at both ends (12 guage)
(h) Two (2) 6 in. clamp rings
(e) ½ h.p. motor and drive, 110/220 v., 60 Hz., one phase, and magnetic starter.

Preferred Brand: Universal Industries
C2-175 (Easy Dump)
Elevator

Suppliers: Universal Industries
Ferrell-Ross
Burrows
Mercator Corporation

Estimated Cost, FOB Supplier $2,200.00

25.	Bin, metal; for receiving and holding seed above disc separator; bin 3 ft. square and 2 ft. deep exclusive of hopper bottom; hopper bottom walls to taper at 50° angle to centered 4 in. opening fitted with slide gate shutoff.	1

Supplier: Bin to be locally fabricated in El Salvador as per design and specification in Drawings No.6and 7.

Estimated Cost: Local $200.00

Item No.	Description	No. Required
26. See Note #2a.	Disc seed separator for rice; machine to be capable of removing short material from rice seed; 18 in. diameter cast discs with pockets mounted on shaft; 27 discs; disc-by-disc materials level control; adjustable gate in discharge opening; inlet openings for positive settings; self-cleaning; drop bottoms on both the main and return conveyor sections for quick, thorough clean-out. Supplier to specify disc pockets and disc arrangement on basis of test sample submitted by buyer; with manufacturer's recommended motor and drive, operable on 220 v., 60 Hz., 3 phase. Preferred Brand: Carter-Day Model 1827 Disc Separator (for rice) Suppliers: Hart-Carter Americas (sole supplier) Estimated Cost, FOB Supplier $4,200.00	1
27.	Elevator, Belt-Bucket type; for seed; 230 cubic feet hour capacity with 75% bucket fill and belt speed of 110-125 FPM; bucket spacing 4¼ inches; metal construction; 22 ft. discharge height; complete with: (a) Required buckets, belts, belt splicers and assembling hardware (b) Dump hopper and spout hopper (one of each) (c) 45° elbow; 6 in. with adapter, transition and slip ring (d) Six (6) clamp rings (6 in.) (e) 5 ft. of flexible metal spouting, 6 in., with six (6) loose flanges (f) Two (2) 10 ft. sections of rigid metal spouting (12 guage) flanged both ends (g) Bottom boot cleanout with 4 inch legs (h) 1/3 h.p. motor drive, 115/230 v., 60 Hz., one phase and magnetic starter Preferred Brand: Universal Industries Model C2-175 (Easy Dump) Suppliers: Universal Industries Ferrell-Ross Burrows Estimated Cost, FOB Supplier, $1,800.00	1
28. See Note #3	Bin, metal; for receiving and holding seed over precision grader separator; 4 ft. square and 4 ft. deep exclusive of hopper bottom; hopper bottom to have walls tapering at 50° angle to centered 4 in. discharge opening; discharge fitted with slide gate shut off. Supplier: To be fabricated locally in El Salvador as per design and specifications in Drawings No. 6 and 7. Estimated Cost; locally $250.00	1

Item No.	Description	No. Required
29. & 30. See Note #4	Width and Thickness Grader; for seed; separations to be made by revolving cylinders with slotted or round openings; all metal construction; quick cylinder change feature; overall dimensions of separator - 33 in. wide, 84 in. long; 45 in. wide; complete with:	2

(a) 1. Vibrating conveyor with motor to discharge at tailing end of machine (for one separator).
2. Vibrating conveyor with motor to discharge at feed end of machine (for second separator).

(b) 1/3 h.p. motor and drive operable on 110/220 v., 60 Hz., one phase, with magnetic starter.

(c) Twelve (12) slotted and round hole cylinder assemblies to be determined on basis of test samples of corn and rice seed provided by buyer to supplier.

Preferred Brand: Carter-Day
Precision Grader No.2

Suppliers: Hart Carter Americas
Mercator Company

Estimated Cost, FOB Supplier $10,800.00
($5,400.00 each)

31. 32. 33. 41. 42.	Bin metal; for receiving and holding seed from precision graders and other machines; 5 ft. square, 4 ft. deep exclusive of hopper bottom hopper bottom to have walls tapering at 50° angle to centered 4 in. discharge opening; discharge fitted with slide gate shut-off. (There is some variation in hopper bottoms, see Drawings No.6, 7 and 8.	5

Supplier: To be fabricated locally in El Salvador as per design and specifications in Drawings 6, 7 and 8.

Estimated Cost, Local $1,750.00
($350.00 each)

34.	Conveyor, Trough Belt-Type; for horizonal conveying of seed; capacity of 1500 bushels per hour; belt speed of 250 FPM; head shaft speed of 170 RPM; heavy-duty construction: metal framing; 16 ft. long; with:	1

(a) Belt, assembling hardware
(b) Manufacturer's recommended drive and motor, operable on 230 v., 60 Hz.
(c) Discharge housing (fits head assembly)

Preferred Brand: Universal Industries
Model KS-1500, Trof-Belt

Suppliers: Universal Industries
Burrows
Seedburo

Estimated Cost, FOB Supplier $1,000.00

Item No.	Description	No. Required
35.	Elevator, Belt-Bucket Type; for seed; 230 cubic feet per hour capacity at 75% bucket fill, and belt speed of 110-125 FPM; bucket spacing 4¼ inches; metal construction; 26 ft. discharge height from 3-way valve; complete with:	1

(a) Required belt, splicers, buckets, and assembling hardware
(b) Dump hopper
(c) Three-way valve, 6 in., with adapter and transitions
(d) Two (2) C.I. adjustable elbows, 6 in.
(e) 10 ft. of flexible metal spouting, 6 in., with four (4) loose 6 in. flanges
(f) Six (6) 6 in. clamp rings
(g) Two (2) 10 ft. sections of rigid metal spouting, 6 in. flanged on both ends
(h) ½ h.p. motor, 115/230 v., 60 Hz., one phase; magnetic starter
(i) Bottom boot cleanout with 4 inch legs

Preferred Brand: Universal Industries
Model C2-175 (Easy Dump)

Suppliers: Universal Industries
Ferrell-Ross
Burrows

Estimated Cost, FOB Supplier $1,600.00

36.	Bin, metal; for receiving waste product from gravity table; 4 ft. square, 4 ft. deep exclusive of hopper bottom; hopper bottom with side walls tapering at 50° angle to 4 in. centered discharge; discharge fitted with slide gate shut-off.	1

Supplier: To be locally fabricated in El Salvador as per design and specifications in Drawings 5, 7, and 8.

Estimated Cost, Locally $250.00

37.	Elevator, Belt-Bucket Type; for seed; 94 cubic feet per hour capacity; belt speed of 82-98 FPM; bucket spacing 3¼ inches; metal construction; 22 ft. discharge height; complete with following:	1

(a) Required belting, splicers, buckets, and assembling hardware
(b) Dump hopper
(c) Off-set two-way valve, 6 in., with adapter and transition
(d) Two (2) C.I. adjustable elbows, 6 in.
(e) 10 ft. of flexible metal spouting, 6 in. with two (2) loose 6 in. flanges
(f) Two (2) 6 in. clamp rings
(g) One (1) 10 ft. section of 6 in. rigid metal spouting, 6 in. flanged on both ends
(h) Bottom boot cleanout with 4 inch legs
(i) 1/3 h.p. motor and drive, operable on 115/230 v., 60 Hz., one phase with magnetic starter

Item No.	Description	No. Required
	Preferred Brand: Universal Industries Model B2-75 (Easy Dump) Suppliers: Universal Industries Ferrell-Ross Burrows Estimated Cost, FOB Supplier $1,400.00	
38.	Bin, metal; for receiving and holding seed for feed to gravity table; 5 ft. square, 5 ft. deep exclusive of hopper bottom; hopper bottom with side walls tapering at 50° angle to 4 in. corner discharge, fitted with slide gate close-off. Supplier: To be locally fabricated in El Salvador as per design and specifications in Drawings No. 7 and 8. Estimated Cost, Local $350.00	1
39. See Note #5	Gravity separator, for seed; rectangular deck, 36 in. x 72 in.; multiple fans located under deck, separately adjustable; equipped with "A" type deck for cleaning larger seed, and of perforated metal or coarse steel wire (whichever is best for corn seed); over-all dimensions of machine: 79 in. length, 45 in. width, 54 in. height (variable); machine to have 5 adjustments: controllable air; speed of travel; side inclination; end inclination; and rate of feed. Complete with motor of required horse power and drive, operable on 220/440 v., 60 Hz., 3 phase, with starter. Separator with LEFT HAND DISCHARGE. Preferred Brand: Oliver H-Cap No. 80 Suppliers: Oliver Mfg. Company Mercator Corporation Burrows Estimated Cost, FOB Supplier $3,400.00	1
40.	Elevator, Belt Bucket-Type; for seed; 230 cubic ft. per hour capacity; belt speed, 110-125 FPM; bucket spacing 4¼ inches; metal construction; 24 ft. discharge height from three-way valve; complete with: (a) Required buckets, belting, beltsplices and assembling hardware (b) Dump hopper (c) Three-way valve, 6 in., with adapters and transitions (d) Two (2) clamp rings (6 in.) (e) 15 ft. flexible metal spouting, 6 in. with twelve (12) loose 6 in. flanges (f) Three (3) 10 ft. sections of rigid metal spouting, 6 in., 12 guage (g) Bottom boot cleanout with 4 inch legs (h) 1/3 h.p. motor and drive, operable on 110/220 v., 60 Hz., one phase with magnetic starter.	1

Item No.	Description	No. Required
	Preferred Brand: Universal Industries Model C2-175 (Easy Dump) Suppliers: Universal Industries Ferrell-Ross Mercator Corporation Burrows Estimated Cost, FOB Supplier $1,600.00	
41.	See under Item 31.	
42.	See under Item 31.	
43. See Note #6	Seed Treater; metered slurry type; for applying chemical seed treatments to seed; capacity of 300 bushels of seed per hour; equipped with film coater; dipper sizes suitable for applying standard seed treatments (fumicide, insecticide) to corn and sorghum; complete with mixing tank and agitator; manufacturer's recommended motors and drives, operable on 110/220 v., 60 Hz., single phase. Sole Model: Gustafason S-100 slurry seed treater Suppliers: Gustafason Mercator Estimated Cost, FOB Supplier $2,800.00	1
44.	Elevator, Belt-Bucket Type; for seed; 230 cubic ft. per hour capacity; belt speed, 110-125 FPM; bucket spacing 4½ inches; metal construction; 24 ft. discharge height; complete with: (a) Required buckets, belting, splices and assembling hardware (b) Dump hopper (c) Bottom boot cleanout with 4 inch legs (d) Two-way valve with adapter and transition (e) 5 ft. flexible metal spouting, 6 in., with two (2) loose 6 in. flanges (f) 10 ft. rigid metal spouting, 6 in., flanged both ends (g) 1/3 h.p. motor and drive, operable on 110/220 v., 60 Hz., one phase, with magnetic starter Preferred Brand: Universal Industries Model C2-175 (Easy Dump) Suppliers: Universal Industries Mercator Corporation Ferrell-Ross Burrows Estimated Cost, FOB Supplier $1,600.00	1

Item No.	Description	No. Required
45.	Bagging-Weighing-Sewing System; consisting of:	1

(1) Automatic gross bagger with capacity of 25 to 140 lbs. in open mouth bags; cam grip bag holder with easy release holder bar; accuracy of ± 2 oz. capacity of seven 50 lb. bags/minute-paper, textile, plastic or burlap; bagger-scale with pedestal (height adjustable).
(2) Sewing head (bag closer); sewing head (bag closer) for all paper and textile bags; heavy duty; self-lubricating; sealed in bearings and moving parts; two to four stitches per inch; Federal type 401; two thread stitch; ½ h.p. sewing head motor with enclosed motor starter and take-up wheel; automatic thread cutter.
(3) Sewing head pedestal; adjustable height - 20.5 to 48"; horizontal movement to permit centering of needle over variable width bags; initiator for automatic start of sewing head when inpulsed by moving bag.
(4) Flat belt-bag sewing conveyor, oil resistant, 12" wide and approximately 7'4" long rubber coated belt; self cleaning "cage" type drive and tail pulley; speed reducer; chain drive to drive pulley; with bag guide vertically and horizontally adjustable, back mounted; with bag stop limit switch and conveyor restart switch activated by foot pedal which also activates sewing head.
(5) Entire system unitized and connected for one-man operation. operable on 115/230 v., 60 Hz.

Preferred Brand: Howe-Richardson Uni-Pak

Suppliers: Howe-Richardson
Seedburo
Burrows
Mercator Corporation

Estimated Cost, FOB Supplier $4,000.00

NOTE: Supply of thread, sewing needles and sewing machine space parts will have to be ordered, when bid on packaging system is accepted; there will depend on exact brand and model of sewing head used.

46. Vacuum cleaner, heavy duty industrial type; vacuum cleaner with external filter and by-pass motor for dry or wet pickup; interchangeable and removable motor unit; stainless steel tanks; with carrier base and handle; adaptable to 2" hose and attachments; 115 v. motor, 60 Hz.; 76 h.p. output. With following accessories: 2

(a) 10' of 2" hose with swivel sleeve for connecting to cleaner
(b) 10' of 2" extension hose
(c) Nipple for connecting extension hose to swivel hose
(d) Aluminum double curved handle for 2" hose
(e) 22" floor tool with fibre shoes for dry pickup on rough floors
(f) 15" flat crevice tool
(g) Aluminum hand nozzle

Item No.	Description	No. Required
	Preferred Brand: Tornado Model 420 Suppliers: Burrows Seedburo Estimated Cost, FOB Supplier $1,300.00 ($ 650.00 each)	
47.	Blower, hand held; 115 v., 60 Hz., 1.5 h.p. motor (input); 49" water lift static; nozzle velocity (open) of 24,500 FPM; with blower nozzle and 25' extension cord. Preferred Brand: Tornado Model 860 Suppliers: Burrows Seedburo Estimated Cost, FOB Supplier $400.00 ($200.00 each)	2
48.	Bag truck, Minneapolis type; two wheel bag truck; 9" diameter rubber tires; hardwood frame and handles; heavy weight iron nose with steel strap up handles; 10" nose length. Preferred Brand: Minneapolis Type Suppliers: Burrows Seedburo Or Local Estimated Cost, FOB Supplier $400.00 ($100.00 each)	4
49.	Platform bag truck; 4 wheels, rubber tires; two 10 x 3" wheels and two 8 x 2½" casters; steel frame with hardwood deck; heavy steel armored pockets, locked and bolted both ways; removable push handle (metal); load capacity of 3,500 lbs. Preferred Brand: None, to meet specifications Suppliers: Burrows Seedburo Estimated Cost, FOB Supplier $900.00 ($300.00 each)	3
50.	Platform scale, portable; double beam type; 100 x ½ lb.; 1,000 lbs. capacity with counter poise weights (provided); open-type lever system; metal construction; corrosion resistant finish; with casters. Preferred Brand: Fairbanks-Morse No. 1180 Suppliers: Burrows Seedburo Mercator Corporation	2

Item No.	Description	No. Required
	Estimated Cost, FOB Supplier $800.00 ($400.00 each)	
51.	(a) Flexible metal spouting, 6 in. diameter, for spouting seed.	10/10 ft. sections
	(b) Rigid metal spouting (12 guage)	10/10 ft. sections
	(c) Flanges, loose, 6 in. diameter, for joining spouting in (a) and (b)	20
	(d) Adjustable elbows for discharge from belt-bucket elevator, 6 in., 0 to 90 degree	10
	Preferred Brand: Universal Industries	
	Suppliers: Universal Industries Burrows	
	Estimated Cost, FOB Supplier $1,000.00	
52.	Assorted miscellaneous items for quality control of seed to be selected and specified by CENTA specialists.	
53.	Heater-Blower unit, for drying seed or grain; heater to be diesel oil burner modified to deliver 150,000 BTU's/hour; fan to be of centrifical type capable of delivering 3,500 cfm air at 1.00 in. static pressure; standard controls and safety devices; stemmed thermometer; all necessary electrical starters and mechanical drive components; electric drive motor to be sized to meet specifications (CFM), probably 5 h.p., operable on 230 v., 60 Hz., 3 phase; spare parts as selected by supplier on basis of experience but not to exceed $200/unit.	1
	Preferred Brand: American Drying Systems Model No. 675 (modified)	
	Suppliers: American Drying Systems Read Steel Products Campbell	
	Estimated Cost, FOB Supplier $3,900.00	

Notes

1. This conveyor is apparently on order by CENTA (Concurso No. 54/75 (4 June, 1975)).

2. An air-screen cleaner is apparently on order, but specifications call for much larger cleaner than needed. We recommend Ferrell-Ross Super X 29-D, or Crippen H-442.

2a This disc separator is apparently already on order.

3. Drawings are being prepared for construction of bins.

Notes (cont.)

4. One width and thickness grader is apparently already on order. Another will be needed. Read specifications under items 29 and 30 very carefully. Note that one precision grader should discharge vibrating conveyor at "tailing" end of machine, while the other grader should discharge vibrating conveyor at feed end of machine.

5. Gravity table (Oliver No. 50) is apparently already on order.

6. Seed treater is apparently already on order.

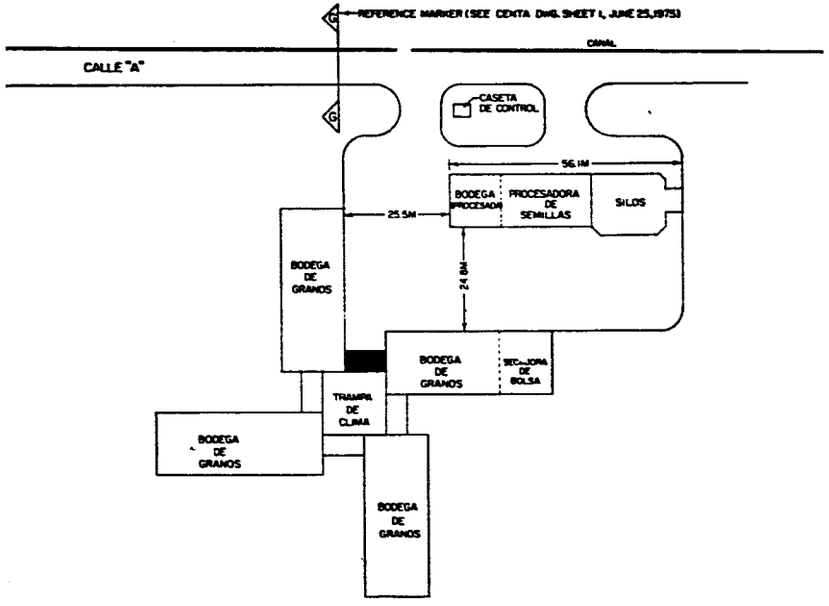

ESCALA = 1:500

MISSISSIPPI STATE UNIVERSITY
MISSISSIPPI AGRICULTURAL EXPERIMENT STATION
SEED TECHNOLOGY LABORATORY
STATE COLLEGE, MISSISSIPPI

SEED FACILITIES
SAN ANDRES EXPERIMENT STATION
EL SALVADOR, C.A.

DESIGNED BY: GBW, JCD	DATE: SEPTEMBER, 1975	SHEET 1 of 11
DRAWN BY: GMD	FILE NO. TA75-09	
APPROVED BY: JCD		

SCALE 3/32" = 1'-0"

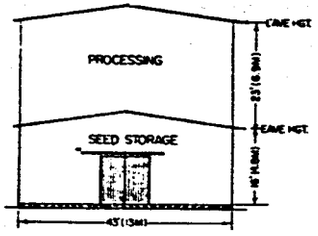

END VIEW

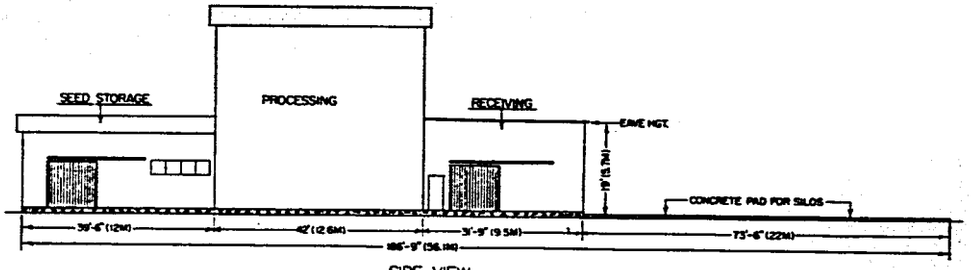

SIDE VIEW

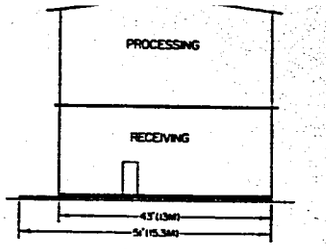

END VIEW

ELEVATIONS

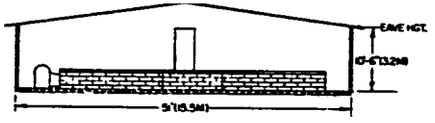

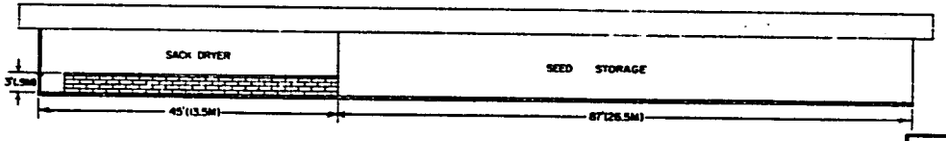

SCALE 1/8" = 1'-0"

ELEVATIONS

MISSISSIPPI STATE UNIVERSITY
MISSISSIPPI AGRICULTURAL EXPERIMENT STATION
SEED TECHNOLOGY LABORATORY
STATE COLLEGE, MISSISSIPPI

SEED FACILITIES
SAN ANDRES EXPERIMENT STATION
EL SALVADOR, C.A.

DESIGNED BY: GBW, JCD	DATE: SEPTEMBER, 1975	SHEET 2 of 11
DRAWN BY: GMD	FILE NO. TA75-09	
APPROVED BY: JCD		

FOR LEGEND SEE REPORT TA75-09

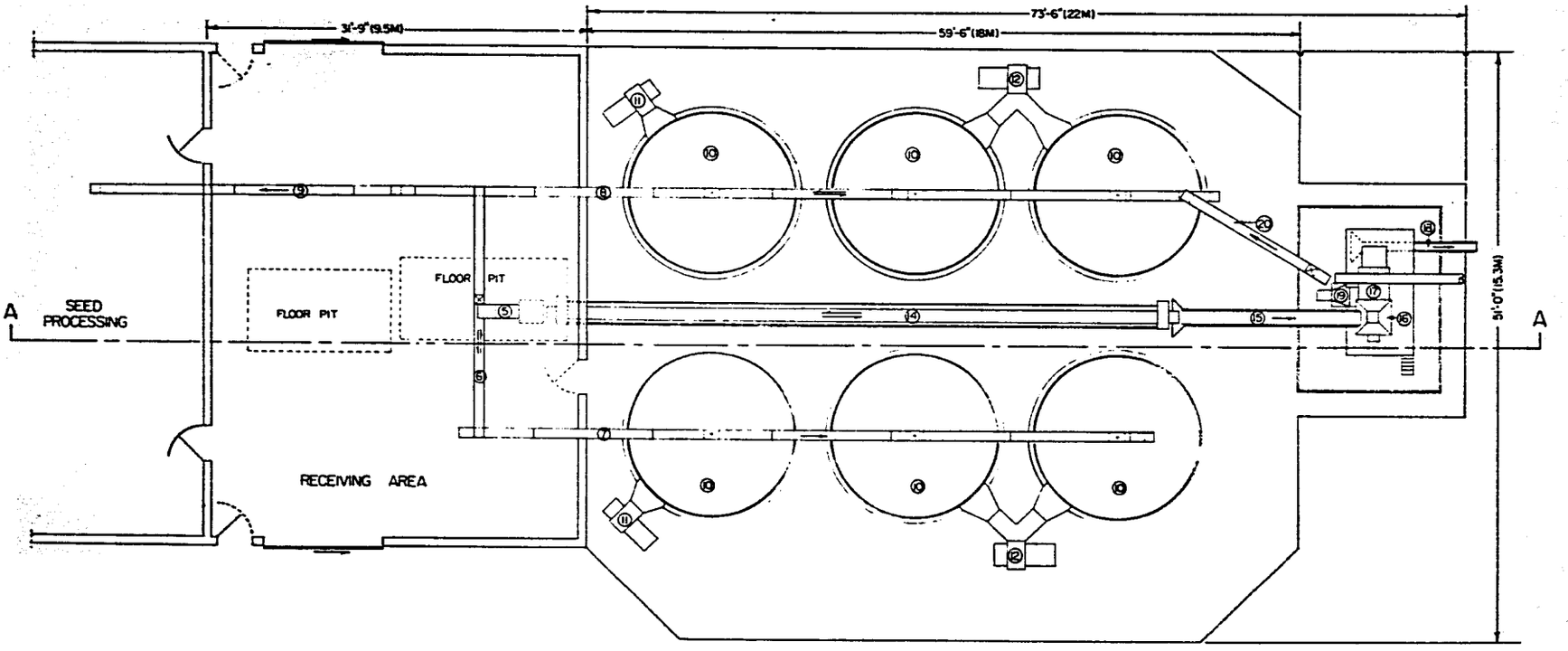

PLAN VIEW (OVERHEAD)

SCALE 1/4" = 1'-0"

SCALE (FEET) 0 1 2 3 6

SCALE (METERS) 0 1 2

MISSISSIPPI STATE UNIVERSITY
MISSISSIPPI AGRICULTURAL EXPERIMENT STATION
SEED TECHNOLOGY LABORATORY
STATE COLLEGE, MISSISSIPPI

SAN ANDRES EXPERIMENT STATION
EL SALVADOR, C.A.

DESIGNED BY: GBW, JCD	DATE: SEPTEMBER, 1975	SHEET 3 of 11
DRAWN BY: GMD	FILE NO. TA75-09	
APPROVED BY: JCD		

FOR LEGEND SEE REPORT TA75-09

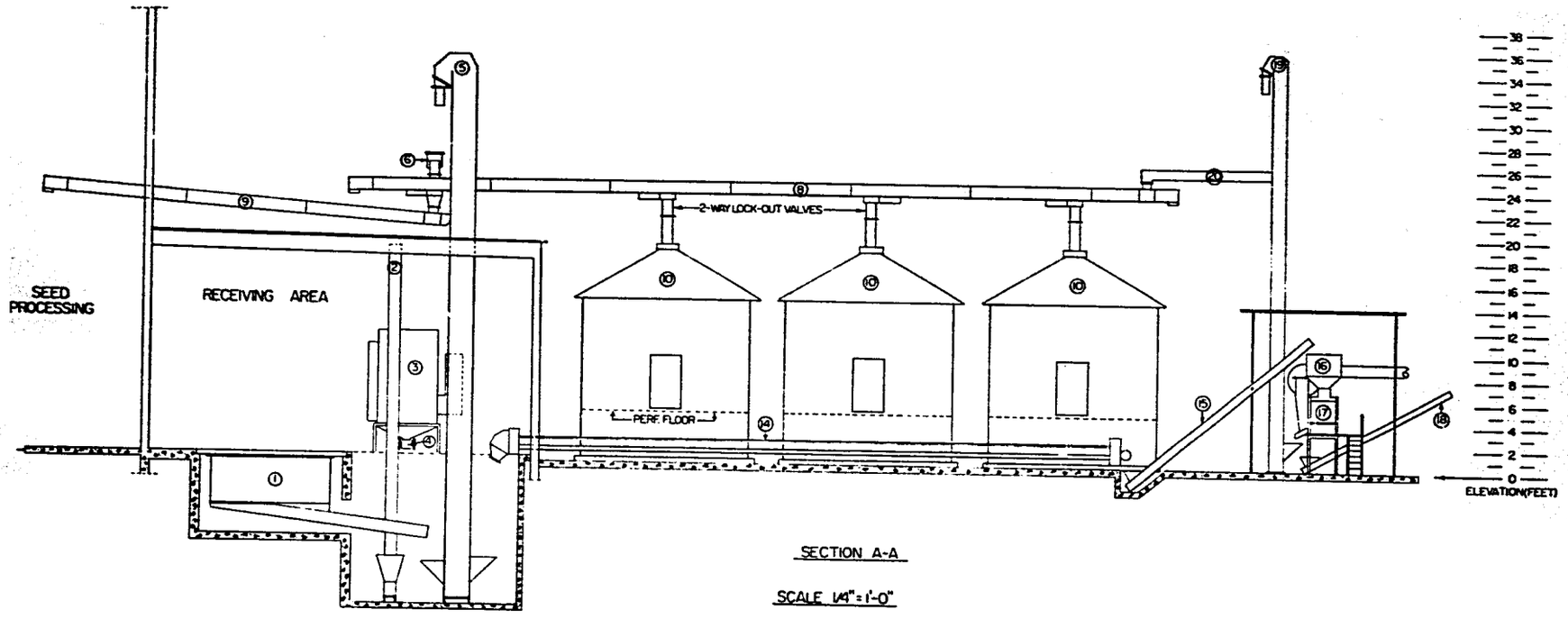

SECTION A-A

SCALE 1/4" = 1'-0"

SCALE (FEET)
0 1 2 3 6

SCALE (METERS)
0 1 2

MISSISSIPPI STATE UNIVERSITY
MISSISSIPPI AGRICULTURAL EXPERIMENT STATION
SEED TECHNOLOGY LABORATORY
STATE COLLEGE, MISSISSIPPI

SAN ANDRES EXPERIMENT STATION
EL SALVADOR, C.A.

DESIGNED BY: GBW, JCD	DATE: SEPTEMBER, 1975	SHEET 4 of 11
DRAWN BY: GMD		
APPROVED BY: JCD	FILE NO. TA75-09	

FOR LEGEND SEE REPORT TA75-09

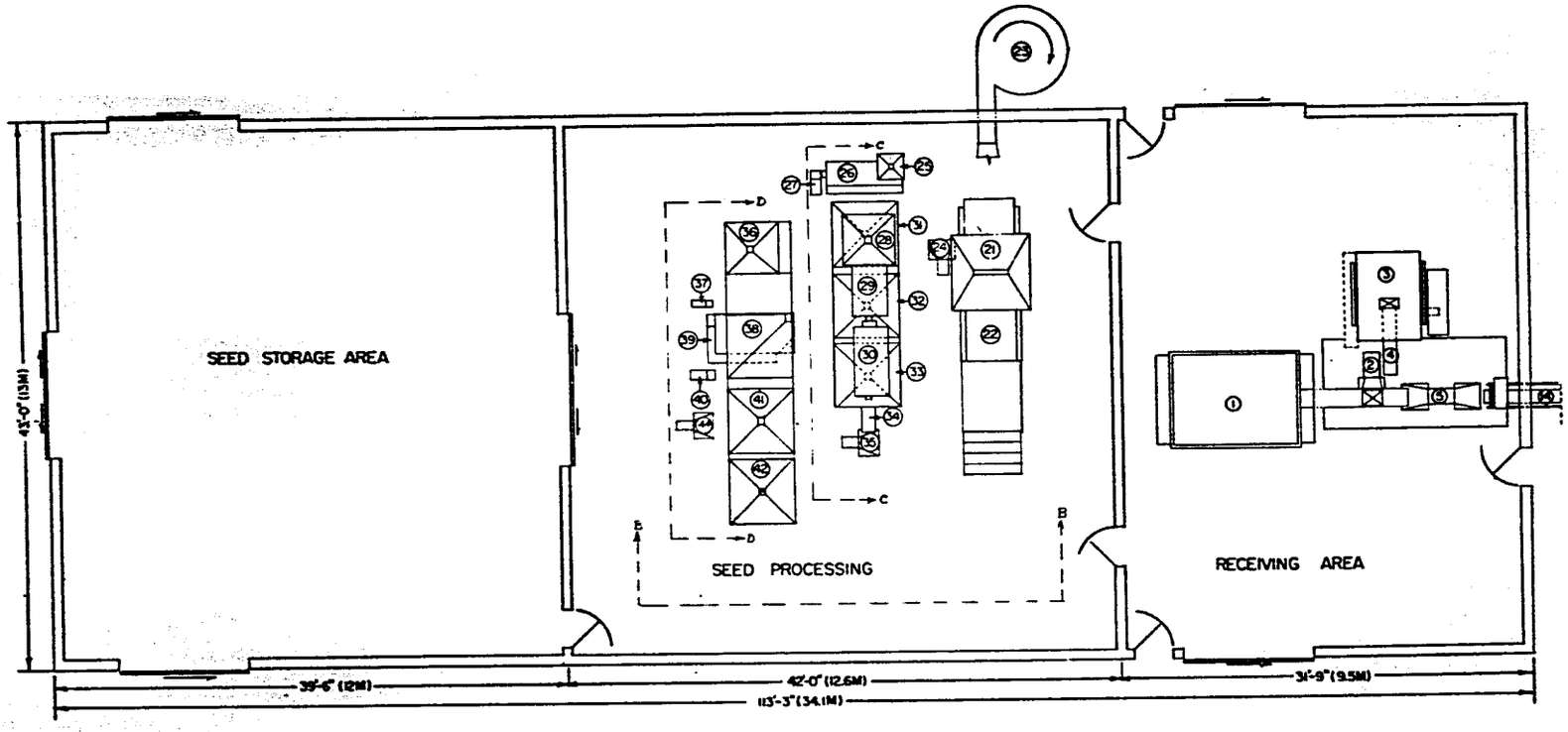

PLAN VIEW(FLOOR)

SCALE 1/4" = 1'-0"

SCALE(FEET) 0 1 2 3 6

SCALE (METERS) 0 1 2

MISSISSIPPI STATE UNIVERSITY
MISSISSIPPI AGRICULTURAL EXPERIMENT STATION
SEED TECHNOLOGY LABORATORY
STATE COLLEGE, MISSISSIPPI

SAN ANDRES EXPERIMENT STATION
EL SALVADOR, C.A.

DESIGNED BY: GBW, JCD
DRAWN BY: GMD
APPROVED BY: JCD
DATE: SEPTEMBER, 1975
FILE NO. TA75-09
SHEET 5 of 11

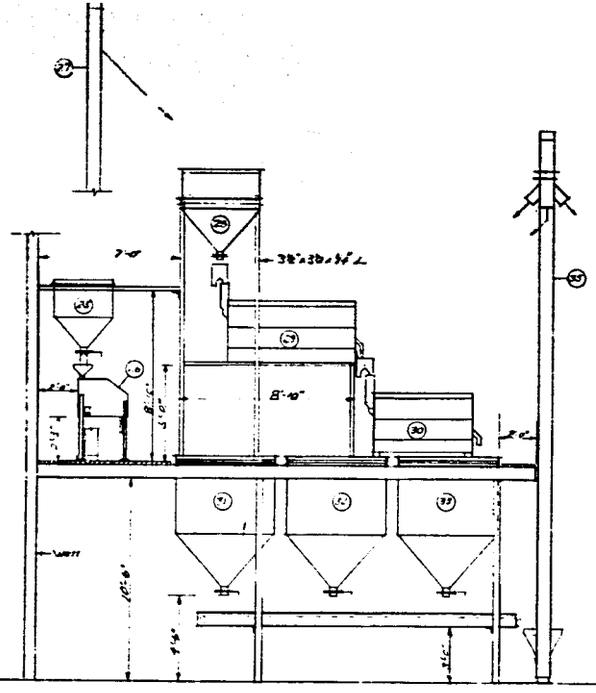

SECTION C-C
Scale: 3/8"=1'-0"

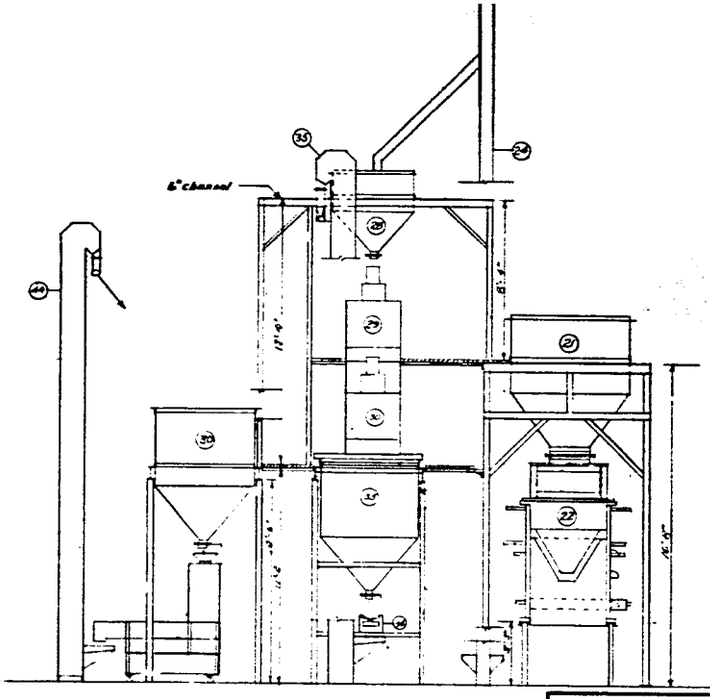

SECTION B-B
Scale: 3/8"=1'-0"

MISSISSIPPI STATE UNIVERSITY
MISSISSIPPI AGRICULTURAL EXPERIMENT STATION
SEED TECHNOLOGY LABORATORY
STATE COLLEGE, MISSISSIPPI

SAN ANDRES EXPERIMENT STATION
EL SALVADOR, C.A.

DESIGNED BY: GBW JCD	DATE: SEPT 1975	SHEET 6 of 11
DRAWN BY: GMD	FILE NO. TA75-09	
APPROVED BY: JCD		

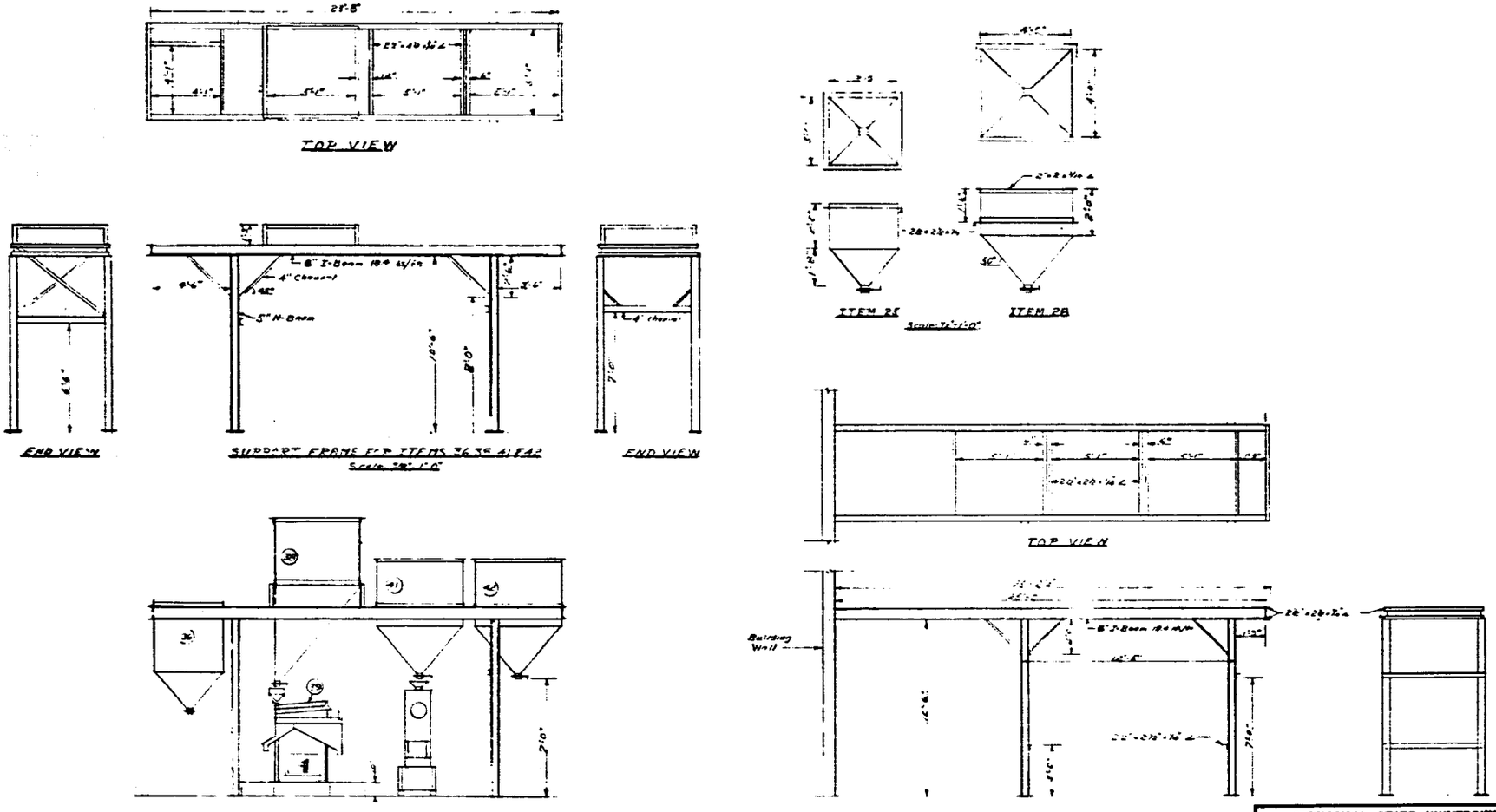

MISSISSIPPI STATE UNIVERSITY
MISSISSIPPI AGRICULTURAL EXPERIMENT STATION
SEED TECHNOLOGY LABORATORY
STATE COLLEGE, MISSISSIPPI

SAN ANDRES EXPERIMENT STATION
EL SALVADOR, C.A.

DESIGNED BY: GBW JCD	DATE: SEPT. 1975	SHEET 7 of 11
DRAWN BY: GMD		
APPROVED BY: JCD	FILE NO. TA75-09	

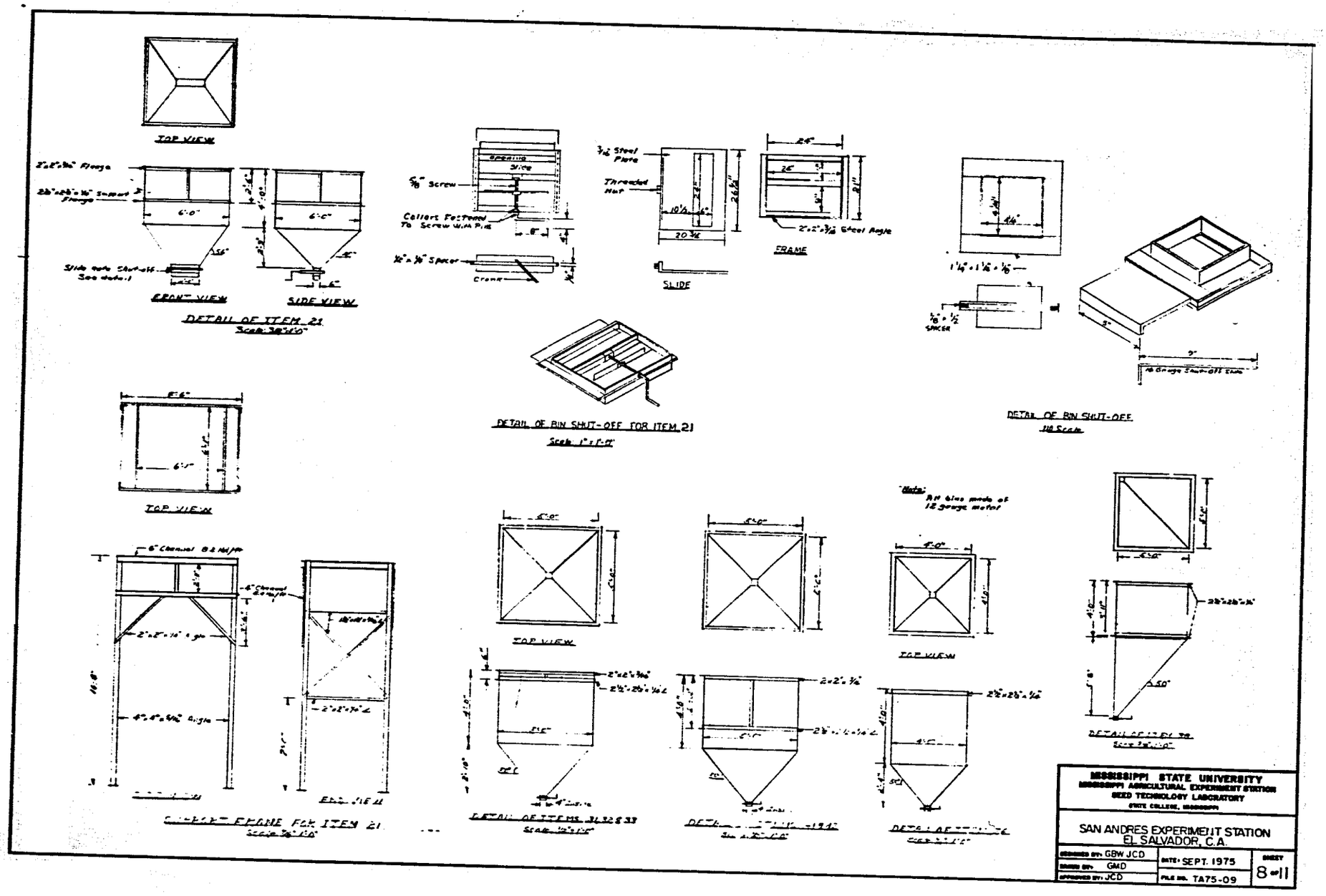
TOP VIEW
FRONT VIEW
SIDE VIEW
DETAIL OF ITEM 21
Scale 3/8"=1'-0"
Screw
Collars Fastened To Screw With Pins
Crank
SLIDE
FRAME
Steel Angle
Threaded Nut
Steel Plate
SPACER
DETAIL OF BIN SHUT-OFF FOR ITEM 21
Scale 1"=1'-0"
DETAIL OF BIN SHUT-OFF
1/8 Scale
TOP VIEW
TOP VIEW
TOP VIEW
DETAIL OF ITEMS 31,32 & 33
MISSISSIPPI STATE UNIVERSITY
MISSISSIPPI AGRICULTURAL EXPERIMENT STATION
SEED TECHNOLOGY LABORATORY
STATE COLLEGE, MISSISSIPPI
SAN ANDRES EXPERIMENT STATION
EL SALVADOR, C.A.
DESIGNED BY: GBW JCD
DRAWN BY: GMD
APPROVED BY: JCD
DATE: SEPT. 1975
FILE NO. TA75-09
SHEET 8 of 11

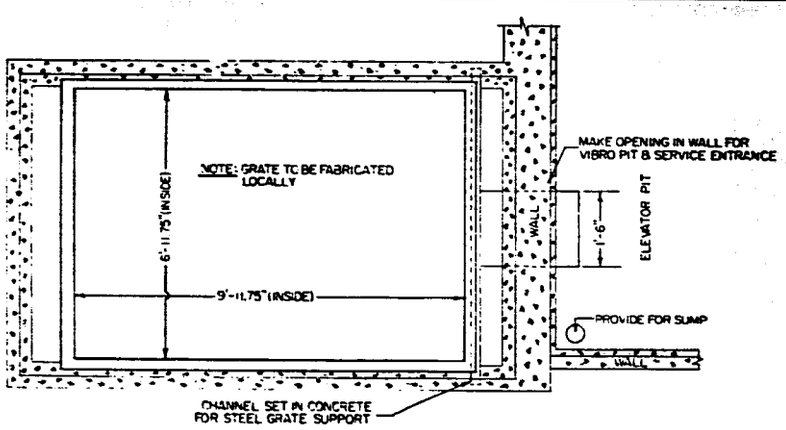

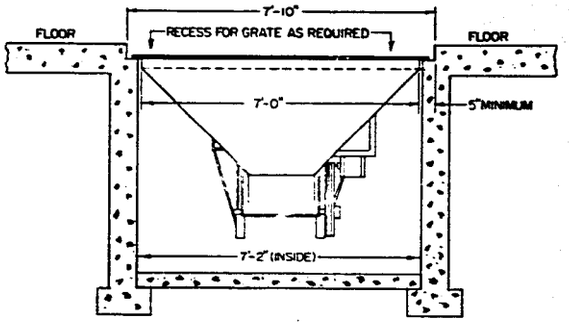

END VIEW SECTION E-E

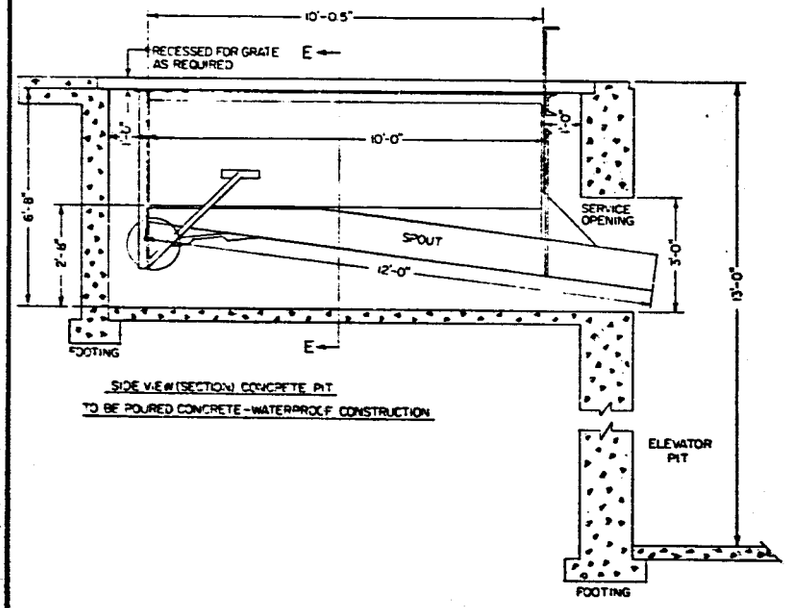

SIDE VIEW (SECTION) CONCRETE PIT
TO BE POURED CONCRETE - WATERPROOF CONSTRUCTION

A.T. FERRELL & CO.
CLIPPER VIBRO PIT ARR'GT
7'x10'x4'---150 BU. CAP.
SCALE 3/4"=1'-0"

MISSISSIPPI STATE UNIVERSITY
MISSISSIPPI AGRICULTURAL EXPERIMENT STATION
SEED TECHNOLOGY LABORATORY
STATE COLLEGE, MISSISSIPPI

SAN ANDRES EXPERIMENT STATION
EL SALVADOR, C.A.

DESIGNED BY: GBW, JCD	DATE: OCTOBER, 1975	SHEET 9 of 11
DRAWN BY: GMD		
APPROVED BY: JCD	FILE NO. TA75-09	

FOR LEGEND SEE REPORT TA75-09

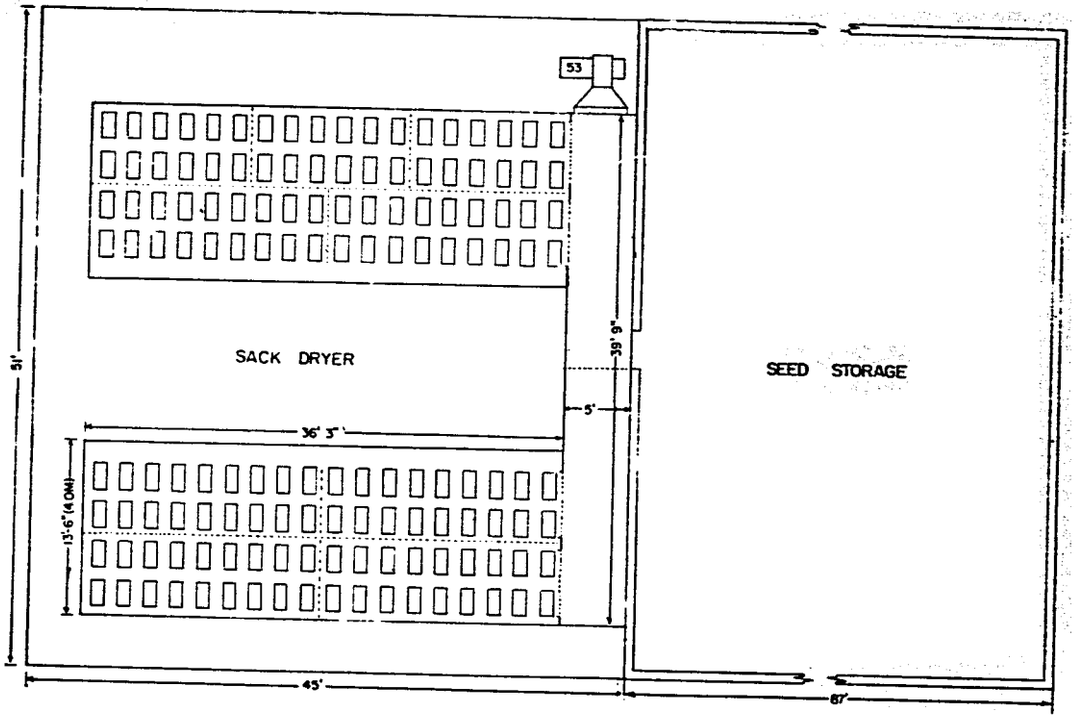

PLAN VIEW
SCALE 1/4" = 1'-0"

MISSISSIPPI STATE UNIVERSITY
MISSISSIPPI AGRICULTURAL EXPERIMENT STATION
SEED TECHNOLOGY LABORATORY
STATE COLLEGE, MISSISSIPPI

SAN ANDRES EXPERIMENT STATION
EL SALVADOR, C.A.

DESIGNED BY: GBW, JCD	DATE: OCTOBER, 1975	SHEET 10 OF 11
DRAWN BY: GMD	FILE NO. TA75-09	
APPROVED BY: JCD		

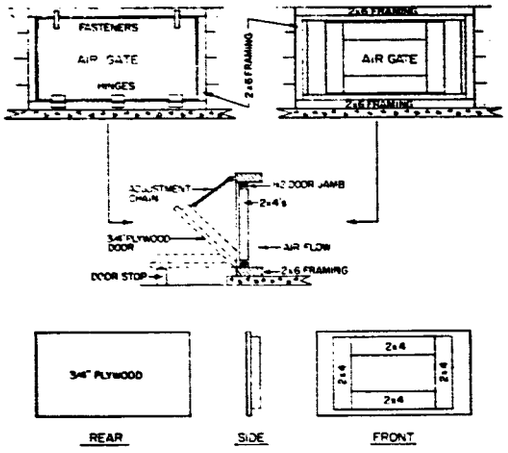

AIR GATE CONSTRUCTION DETAILS
(NO SCALE)

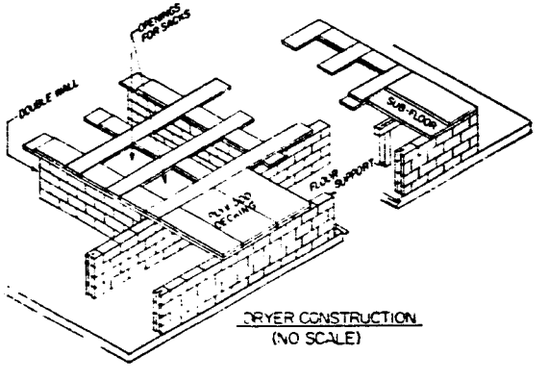

DRYER CONSTRUCTION
(NO SCALE)

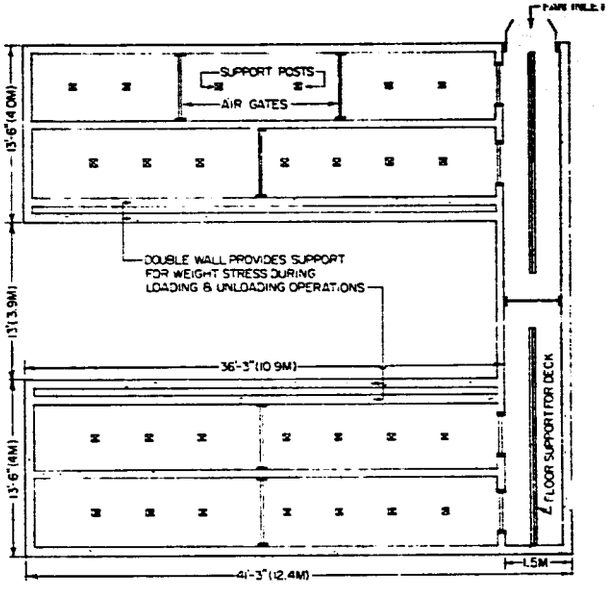

DRYER (SUB-STRUCTURE)
SCALE 1/4" = 1'-0"

SCALE (FEET) 0 1 2 3 6

SCALE (METERS) 0 1 2

MISSISSIPPI STATE UNIVERSITY
MISSISSIPPI AGRICULTURAL EXPERIMENT STATION
SEED TECHNOLOGY LABORATORY
STATE COLLEGE, MISSISSIPPI

SEED FACILITIES
SAN ANDRES EXPERIMENT STATION
EL SALVADOR, C.A.

DESIGNED BY: GBW, JCD	DATE: OCTOBER, 1975	SHEET 11 of 11
DRAWN BY: GMD	FILE NO. TA75-09	
APPROVED BY: JCD		