AGENCY FOR INTERNATIONAL DEVELOPMENT
WASHINGTON, D. C. 20523

BIBLIOGRAPHIC INPUT SHEET

FOR AID USE ONLY

1. SUBJECT CLASSIFICATION

A. PRIMARY: Agriculture

B. SECONDARY: Irrigation

2. TITLE AND SUBTITLE

Modeling sediment transport in hydraulic structures

3. AUTHOR(S)

Mahmood, Khalid

4. DOCUMENT DATE	5. NUMBER OF PAGES	6. ARC NUMBER
1975	13 p.	ARC

7. REFERENCE ORGANIZATION NAME AND ADDRESS

Department of Civil Engineering, Colorado State University
Fort Collins, Colorado 80521

8. SUPPLEMENTARY NOTES *(Sponsoring Organization, Publishers, Availability)*

(In Proceedings of the Symposium on Modeling Techniques, ASCE/San Francisco) September 3-5, 1975

9. ABSTRACT

A report on the development of three mathematical models of sediment transport in hydraulic structures. These models were developed in the context of sediment routing in surface irrigation systems, and specifically relate to vortex tube sand traps, irrigation turnouts and bed level transients in sand-bed canals. Water resource developments on alluvial streams often involve sediment loads that need to be routed through the systems. This routing depends on the sediment transport characteristics of the constituent hydraulic structures. Small-scale physical modeling of sediment transport through structures is difficult because it generally is impossible to satisfy simultaneously the governing equations for the hydraulic and sedimentation phenomena. Mathematical models increasingly are being developed for these studies. Where possible, the mathematical models have the advantages of low cost, increased generality, and economy of time.

10. CONTROL NUMBER

PN-AAB-650

11. PRICE OF DOCUMENT

12. DESCRIPTORS

Hydraulic structures
Models
Sediment transport

13. PROJECT NUMBER

14. CONTRACT NUMBER

CSD-2460 211(d)

15. TYPE OF DOCUMENT

AID 590-1 (4-74)

Reprinted from the
Proceedings of the Symposium on
Modeling Techniques
ASCE/San Francisco, Calif./September 3-5, 1975

MODELING SEDIMENT TRANSPORT IN HYDRAULIC STRUCTURES

by

Khalid Mahmood[1], M.ASCE

ABSTRACT

Water resource developments on alluvial streams often involve sediment loads that need to be routed through the systems. This routing depends on the sediment transport characteristics of the constituent hydraulic structures. Small scale physical modeling of sediment transport through structures is difficult because it is generally impossible to simultaneously satisfy the governing equations for the hydraulic and sedimentation phenomena. Mathematical models are being increasingly developed for these studies. Where possible, the mathematical models have the advantages of low cost, increased generality and economy of time.

Development of three mathematical models of sediment transport in hydraulic structures is presented herein. These models were developed in the context of sediment routing in surface irrigation systems. Specifically the models relate to vortex tube sand traps, irrigation turnouts and bed level transients in sand-bed canals.

INTRODUCTION

Irrigation diversions from alluvial rivers carry a sediment load that is related to the conditions in the river and to the design of the diversion structure. In low head diversions from sand-bed rivers the sediment loads are substantial, so that the system as a whole needs to be designed for sediment discharge equilibrium. This equilibrium implies that the total sediment mass entering over a finite period of time equals the sediment outflow from the system.

To achieve sediment discharge equilibrium, it is necessary to route specified quantities of sediment through various components of the system. Sediment transport characteristics of these components are therefore needed. Small scale physical modeling of the sediment transport through hydraulic structures is a difficult undertaking because it is generally impossible to simultaneously satisfy the governing equations for the hydraulics of the flow and the sedimentation aspects such as particle entrainment, movement as bed load and as suspended load. On the other hand, if the governing equations for sediment transport through these structures can be simplified it

1
Associate Professor, Civil Engineering Department, Colorado State University, Fort Collins, Colorado 80523

MODELING SEDIMENT TRANSPORT IN HYDRAULIC STRUCTURES

BY

Khalid Mahmood

Abstract

Water resource developments on alluvial streams often involve sediment loads that need to be routed through the systems. This routing depends on the sediment transport characteristics of the constituent hydraulic structures. Small scale physical modeling of sediment transport through structures is difficult because it is generally impossible to simultaneously satisfy the governing equations for the hydraulic and sedimentation phenomena. Mathematical models are being increasingly developed for these studies. Where possible, the mathematical models have the advantages of low cost, increased generality and economy of time.

is possible to develop mathematical models that have the usual advantages of economy of cost and time and of increased generality. This paper deals with three different mathematical models of sediment transport in hydraulic structures. These models relate to the sediment routing through an irrigation system designed for sediment discharge equilibrium. Specifically, these are models of vortex tube sand traps, irrigation turnouts and of bed level transients in sand-bed canals.

VORTEX TUBE SAND TRAPS

In irrigation diversion and distribution systems, it is more economical to control the sediment inflow at the diversion structures and to eject excess sediment near the headworks than to treat a sediment problem that has been diffused through the distribution system. A variety of sediment control measures have been evolved in the past. The vortex tube ranks as the more successful of the on-line continuous-operation sediment control measures. It consists of a tube built in the crest of a bed contraction. The tube has a slit on top and is laid across the flow normally or at an angle of 30°-90°. The tube discharges into an escape channel (Fig. 1).

The water and sediment conduction through the vortex tube involves two phenomena: (1) the spatially varied flow in the tube and (2) the sediment transport as bed load and as suspended load in the approach flow. A mathematical model has been developed [7][1] for water and sediment conduction through the vortex tube. The assumptions made in this model are:

1. The flow entering the tube is unaffected by the presence of sediment so the hydraulics of vortex tube flow can be uncoupled from the sedimentation aspects.

2. The upstream transition from the sand bed to the bed contraction is well rounded and gradual so large scale turbulence and flow separation are not caused at this junction.

3. The length of bed contraction from the channel bed upto the tube opening is short so the sediment concentration in the flow entering the tube is the same as in the equilibrium sediment concentration profile in the channel.

Upcoupling the hydraulic and sedimentation aspects of vortex tube flow makes it possible to solve the hydraulics of the flow. This solution is used to determine the sediment influx. The two solutions are subsequently checked to see if the underlying assumptions are satisfied.

---

1 Numbers in brackets [ ] refer to the list of references-Appendix I

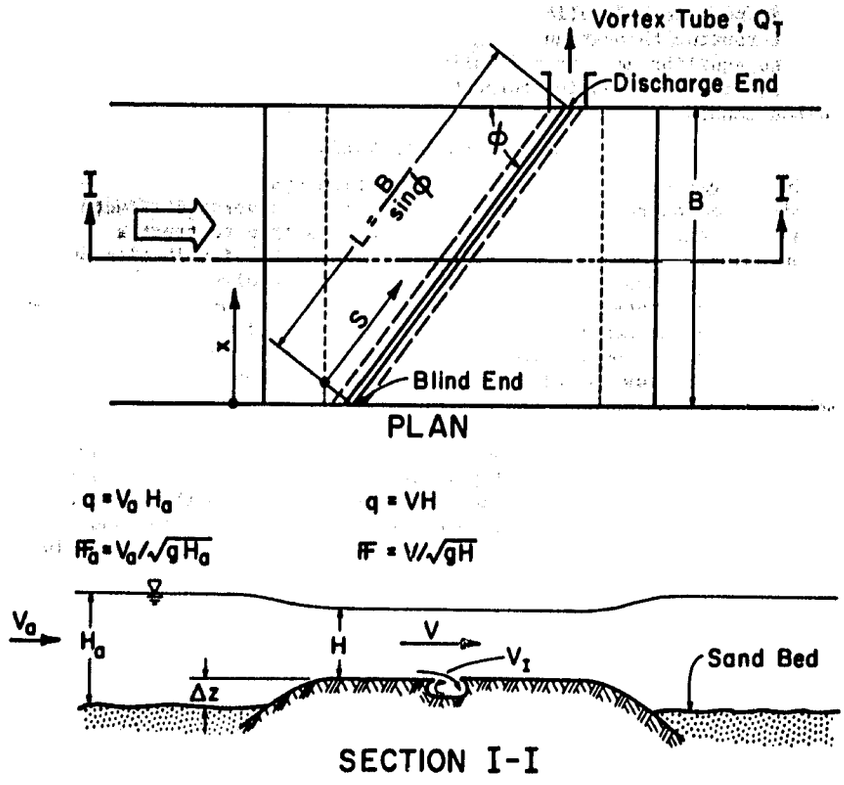

Figure 1. Schematic layout of a Vortex Tube Sand Trap.

Hydraulics of Vortex Tube Flow

The flow through the tube is modeled by considering a forced vortex formation due to the inflow through the slit and a spatially varied flow along the tube. For a prismatic tube the governing equation derived from the continuity and force-momentum relations along the direction of tube flow is a homogeneous, second order non-linear differential equation with constant coefficients:

$$Q'Q'' + A_* Q'^2 + B_* Q\, Q' + C_* Q^2 = 0 \tag{1}$$

where Q(s) is the discharge inside the tube, s is the distance along the tube measured from the blind end, $Q' = dQ/ds$ and $Q'' = dQ'/ds$. Coefficients A_*, B_* and C_* are known functions of the tube geometry, flow coefficients and the Froude number of the flow over the bed contraction. Equation (1) has an exponential solution

$$Q(s) = Q_0 \exp\,[ks] \tag{2}$$

where Q_0 is a constant greater than 0, s is the distance along the tube measured from the blind end and k is the largest positive root of the cubic equation

$$k^3 + A_* k^2 + B_* k + C_* = 0 \tag{3}$$

Verification of Eq. (1) and evaluation of coefficients A_*, B_* and C_* has been made for different tube shapes used in Robinson's laboratory study [7]. Equation (1) can be used to determine the discharge influx per unit length of the tube, $q_y(s)$ $(=Q'(s))$. Using assmuption (2), the segment of flow near the channel bed that feeds the tube can thus be identified.

Sediment Inflow

Using assumption (3) and the results of Eqs. (1), (2) and (3), the sediment inflow in the vortex tube can be calculated. It requires a velocity distribution and a sediment concentration model for the approaching flow in the sand-bed channel. In this case, a power law velocity distribution in the depth of flow is assumed and the sediment transport is closely modeled after Einstein's phenomenological model [1]. The resulting expression for the rate of bed material inflow per unit length of the tube, $g_y(s)$ from the sand-bed upto a distance y(s) into the flow is

$$g_y = l_1 H_a^{m_1} + l_2 H_a^{m_2} + (q_y)^{m_0} l_3 H_a^{m_3} \tag{4}$$

where H_a is depth of the approach flow (Fig. 1), y is the vertical distance from the sand-bed into the channel flow that contains discharge q_y per unit length of the tube and l_1, l_2, l_3, m_0, m_1, m_2 and m_3 are known functions of the bed material, channel flow and sediment transport parameters.

Water and Sediment Conduction

Equations (2) and (4) can be combined to yield the total water and sediment conduction through a vortex tube. The results of this model are compared for one run from the laboratory data [9] in Fig. 2. The correspondence is good considering that only the general evaluation of hydraulic coefficients was made from the laboratory study.

The preceding model can be used to mathematically model the water and sediment conduction through vortex tube sand traps for different design and operational conditions.

IRRIGATION TURNOUTS

The farm diversions are made through turnouts in the canal and water is delivered to the farm through small water course channels. In many surface irrigation systems, the total sediment load diverted with the farm water diversions is a major factor in achieving sediment discharge equilibrium of the system [4,5,6]. A mathematical model of sediment withdrawal by an orifice type turnout was developed [5,6]. The assumptions made in this model are:

1. The hydraulic and sedimentation aspects of flow through the turnout can be uncoupled.

2. The convective acceleration of the channel flow due to the turnout is small.

The hydraulic solution of the channel flow in the vicinity of the turnout is obtained by replacing the turnout with a uniformly distributed sink of the same strength as the turnout. A number of images of the sink are used in the plane normal to flow to satisfy the boundary conditions (refer Fig. 3). The flow fields due to the sink and its images are superimposed on the channel flow. From the resulting flow field around the turnout a region is determined in the channel cross-section upstream of the turnout and beyond its influence, so that all the flow from this region enters the turnout. As an illustration these regions for different turnout settings, d_c and discharges, Q_t are shown in Fig. 4 for a channel with depth of flow d = 4.03 ft and the average velocity in the vertical of 1.82 fps.

The sediment conduction through the turnout is based on the second assumption. If the convective acceleration between the undisturbed flow region and the turnout is small, then the sediment content of the parcel of fluid entering the turnout is about the same as it carried in the quilibrium flow in the undisturbed region. From theoretical models of bed material transport [1,2] the sediment conduction in the turnout can therefore be calculated by integration over the region feeding the turnout. For the turnout shown in Fig. 4, the variation of quantities C_{rat}, D_{50r} and σ_r are shown in Fig. 5. Here, C_{rat} is the ratio of bed material concentration, D_{50r}

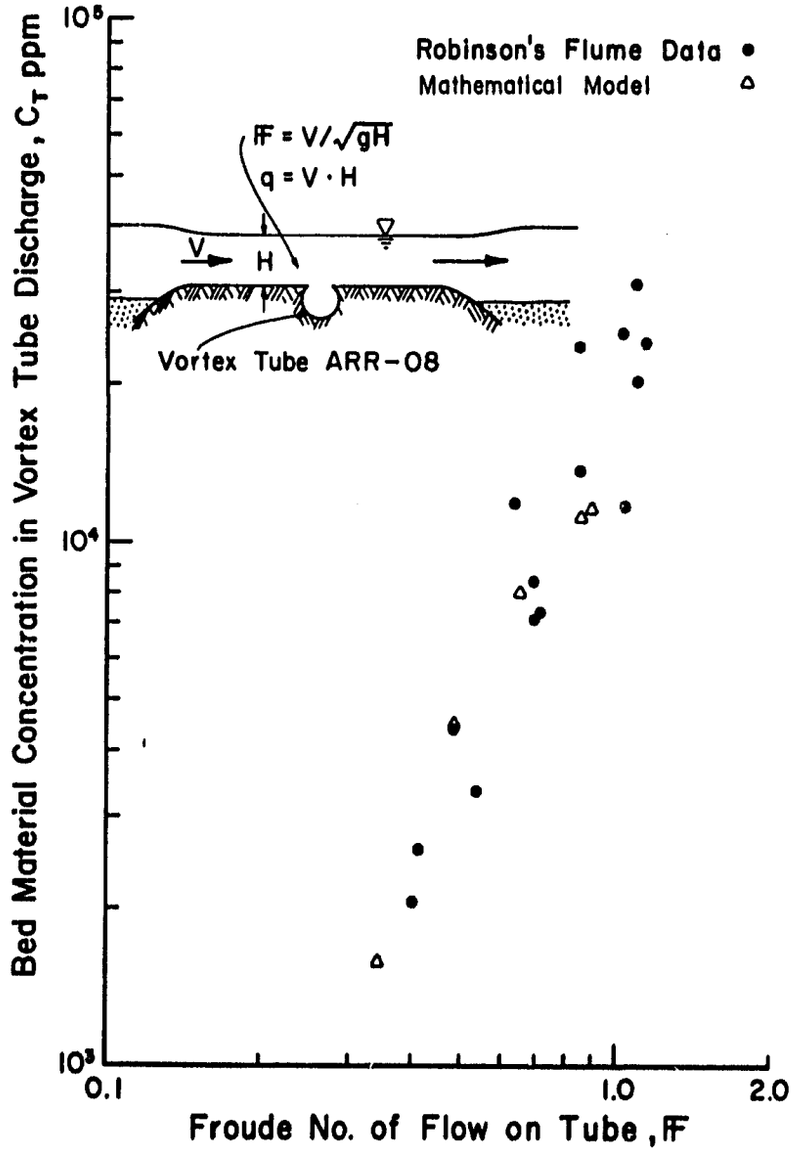

Figure 2. Comparison of the Mathamatical Model results and the Laboratory Flume data for Robinson's Vortex Tube ARR-08 (after reference 7).

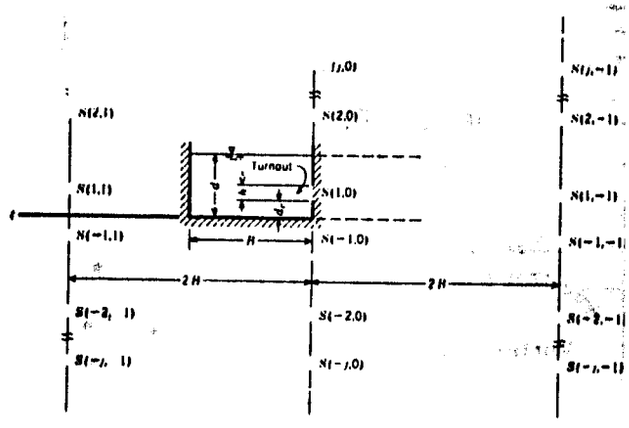

Figure 3. Arrangement of uniformly distributed sinks to satisfy boundary conditions of channel flow.

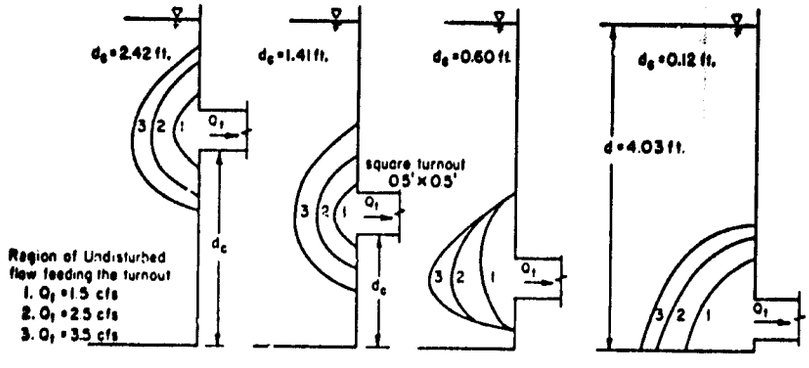

Figure 4. Regions in channel cross section, upstream of the turnout contributing the turnout flow as determined by the mathematical model (after reference 6).

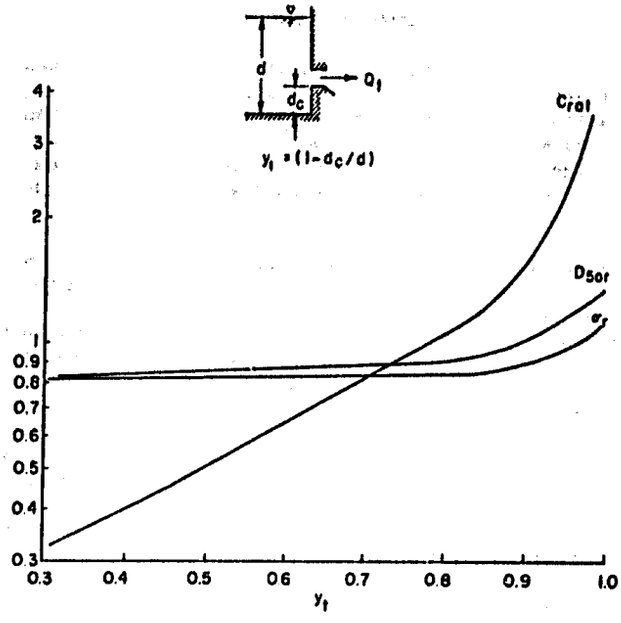

Figure 5. Variation of Bed Material Load characteristics with turnout setting y_t determined from the mathematical model (after reference 6).

is the ratio of the median size and σ_r the ratio of gradation coefficient between the bed material load conducted in the turnout and that transported in the channel.

This model can be used to mathematically model the water and sediment conduction through the farm turnouts in the context of sediment discharge equilibrium of a surface irrigation system.

SAND-BED CANALS

The conveyance and distributary channels are vital components of surface irrigation systems. They transmit the discharge required for the irrigation areas downstream. If a channel cannot transmit the water and sediment loads imposed on it by the requirements of sediment discharge equilibrium or by the exigencies of the actual operation, then the portion of the system downstream of the channel will be starved.

Unlined sand-bed channels can be designed for specified equilibrium bed material load within limits. However, the discharges in canal systems as well as their sediment loads vary seasonally. During the high flow seasons, more water is available for diversion and the sediment loads are also high. As an example the hydrograph of discharge and sediment load entering Lower Bari Doab Canal at Balloki Headworks for 1962-63 is shown in Fig. 6. The effect of seasonal sediment load is to induce bed level transients in the channels. These transients are generally formed in the head reaches of the system and migrate in the direction of flow. In channel systems where a number of transients coexist, they can coalesce to form larger transients. In any case, the bed transients are bottlenecks in a surface irrigation system and their behavior needs to be modeled to predict the system performance. This has been done by developing a mathematical model [8]. This model is based on two assumptions:

1. The flow in sand-bed canals can be considered one dimensional so the channel phenomena are functions only of one linear dimension which is the distance along the direction of flow.

2. The hydraulic transients in canals travel much faster than the bed level transients so that when movement of bed level transients is being investigated, the water flow can be considered as steady.

With these assumptions, the governing equations are:

<u>Equation of Motion</u>

$$\frac{1}{g}\frac{\partial}{\partial t}\left(\frac{Q}{A}\right) + \frac{\partial}{\partial x}\left(\frac{Q^2}{2gA^2} + Y\right) + S_f = 0 \qquad (5)$$

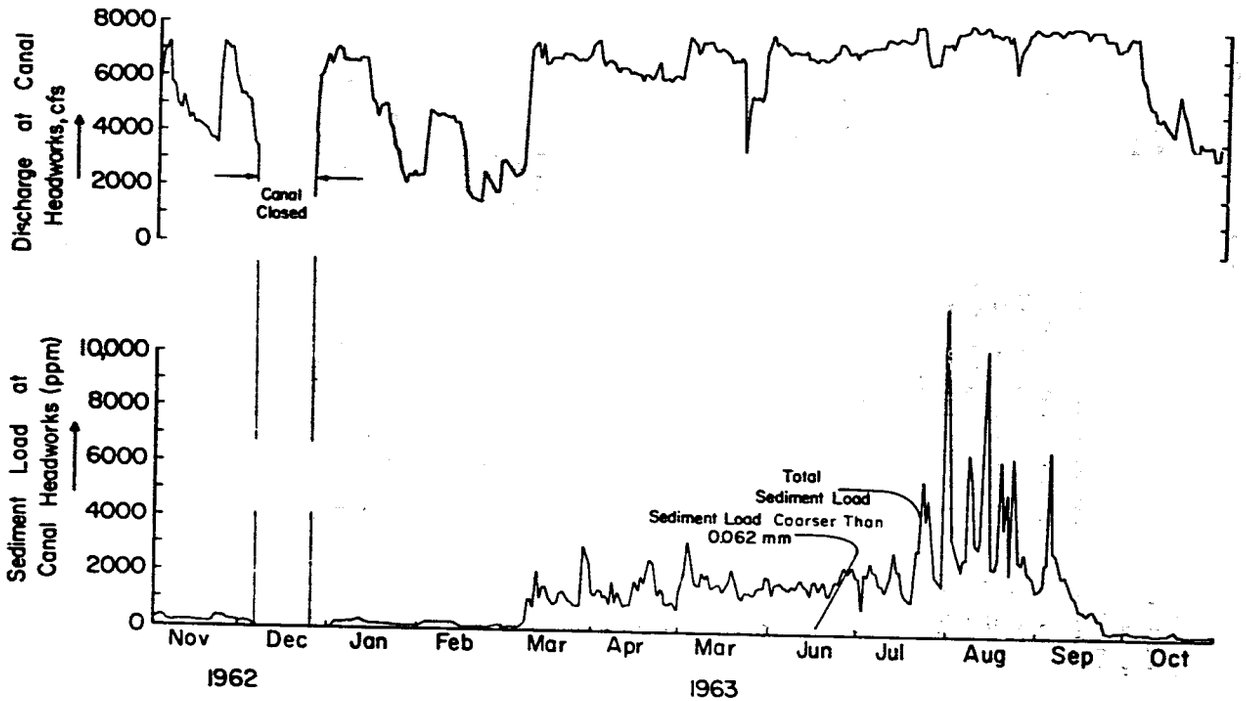

Figure 6. Hydrograph of discharge and sediment load entering Lower Bari Doab Canal at Balloki Headworks in Pakistan for 1962-63.

Equation of Continuity for the Bed Material

$$\frac{\partial}{\partial x}(G_s) + \frac{\partial}{\partial x}(G_b) + \frac{\partial}{\partial t}(C_s A) + (1-p)\frac{\partial(BZ)}{\partial t} = 0 \qquad (6)$$

In Eqs. (5) and (6), Q = the constant discharge in the channel, A = the cross-sectional area, g = the gravitational acceleration, Y = the water surface elevation, S_f = the energy gradient assumed to be equal to the energy gradient for a representative average flow, G_s = the suspended bed material load, G_b = the bed load, C_s = the average spatial bed material concentration in the cross section, p = the porosity of the channel bed, Z = the bed elevation, B = the deformable bed width (assumed equal to the width of the rectangular cross section), x = the distance along the channel bed measured in the downstream direction and t = the time. Some of these quantities are shown in the definition sketch-Fig.7. Also all the terms in Eq. (5) have units of slope and G_s and G_b in Eq. (6) are expressed in units of solid volume discharge per unit time and the value of p is constant in space and time. The cross-sectional area A = BH where H = the depth of flow and B = a known function of x, which is invariant in time. Finally it is assumed that the mass density of the sediment water mixture in Eqs. (50 and (6) is the same as that of water.

In addition to Eqs. (5) and (6), supplementary equations are available from the theory of alluvial channel flow, which relate S_f, G_s, G_b and C_s with the hydraulic parameters of the flow. With their addition, Eqs. (5) and (6) form a system of hyperbolic equations in two variables Y(x,t) and Z(x,t) that can be solved numerically.

The supplementary equations have been developed in this model as simple power functions of the depth of flow H following the phenomological models of flow in sand bed channels developed by Einstein [1] and by the writer [3]. The numerical scheme adopted in this model is Preissmann's implicit linearized scheme [2].

In the study of bed level transients, two different problems have been studied: (1) the development of a bed wave as a result of the sediment inflow transient and (2) the migration and modification of the bed wave in time. The results of one such study are shown in Fig. 8.

This model is being used to simulate the formation and migration of bed level transients in the Link Canals of Pakistan.

CONCLUSION

Small scale physical model studies of sediment transport in hydraulic structures generally suffer from the drawback that the governing questions for the hydraulic and sedimentation aspects

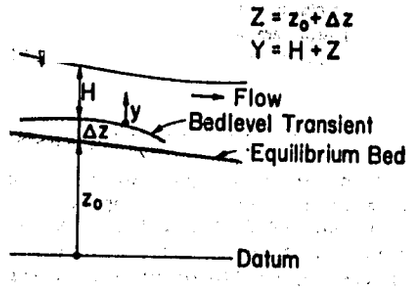

Figure 7. Definition sketch for Bed level transients in sand-bed Canals.

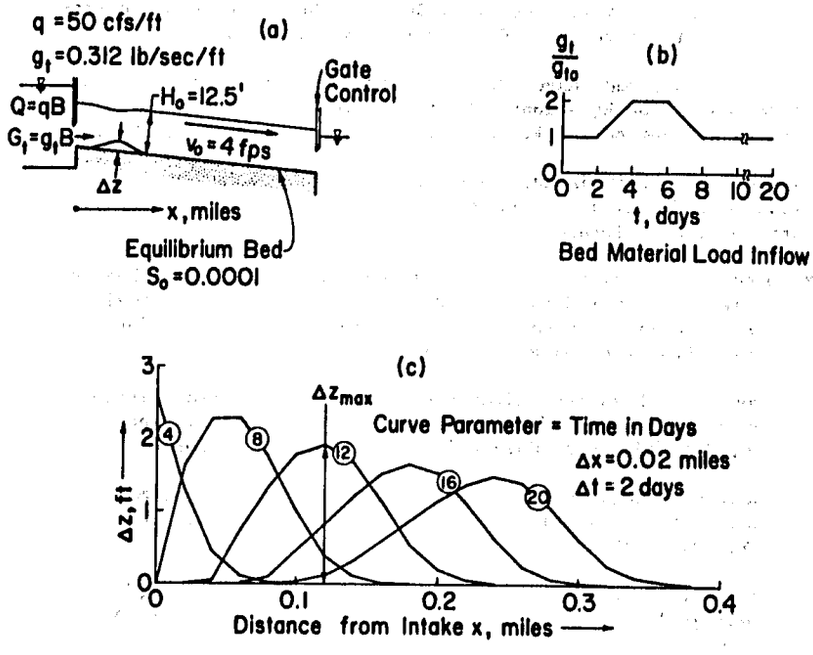

Figure 8. Development and migration of a bed level transient (c) as a result of the sediment inflow transient (b) in a sand-bed channel (a) (after reference 8).

cannot be satisfied simultaneously. Under favorable circumstances, mathematical models can be developed for these problems. Where possible, the mathematical models have the usual advantages of low cost, increased generality and economy of time. Summaries of three models of sediment transport in hydraulic structures have been presented herein. These models are all related to the problem of sediment discharge equilibrium in surface irrigation systems.

ACKNOWLEDGEMENTS

The studies reported herein are part of a continuing research on the Alluvial River Mechanics Project, supported by National Science Foundation Grant No. ENG72-00274 A01 with the writer as its principal investigator. The turnout and the vortex tube studies were also partly supported by US AID Grant No. AID/csd-2460 to Colorado State University on Optimum Utilization of Water Resources with E. V. Richardson as the project leader.

APPENDIX I - REFERENCES

1. Einstein, H.A., "The Bed-Load Function for Sediment Transportation in Open Channel Flow," Technical Bulletin No. 1026, U.S. Department of Agriculture, Soil Conservation Service, 1950.

2. Liggett, J.A., and Cunge, J.A., "Numerical Methods of Solutions of Unsteady Flow Equations," Unsteady Flow in Open Channels Editors K. Mahmood and V. Yevjevich, Vol. 1, Chapter 4, 1975.

3. Mahmood, K., "Flow in Sand-Bed Channels," CUSUSWASH Water Management Technical Report No. 11, Colorado State University, Fort Collins, Colorado, 1971.

4. Mahmood, K., "Sediment Equilibrium Considerations in the Design of Irrigation Canal Networks," Paper No. A-65, International Symposium on River Mechanics, International Association for Hydraulic Research, Bangkok, 1973.

5. Mahmood, K., "Planning Sediment Distribution in Surface Irrigation Systems," CUSUSWASH Water Management Technical Report No. 26, Colorado State University, Fort Collins, Colorado, 1973.

6. Mahmood, K., "Sediment Routing in Irrigation Canal Systems," Journal of the Irrigation and Drainage Division, ASCE, Vol. 100, No. IR1, March 1974.

7. Mahmood, K., "Flow through Vortex Tube Sediment Ejectors," Proceedings Irrigation and Drainage Specialty Conference, ASCE, Logan, Utah, August 1975.

8. Mahmood, K., "Mathematical Modeling of Morphological Transients in Sand Bed Canals," Paper No. B8, XVI th Congress of the International Association for Hydraulic Research, Sao Paulo, Brazil, 1975.

9. Robinson, A.R., "Vortex Tube Sand Trap," Transactions ASCE Vol. 127, Pt. III, 1962.