AGENCY FOR INTERNATIONAL DEVELOPMENT
WASHINGTON, D. C. 20523

BIBLIOGRAPHIC INPUT SHEET

FOR AID USE ONLY

1. SUBJECT CLASSIFICATION

A. PRIMARY: SCIENCE AND TECHNOLOGY

B. SECONDARY: SCIENCE AND TECHNOLOGY

2. TITLE AND SUBTITLE

THE ROLE OF STANDARD REFERENCE MATERIALS IN MEASUREMENT SYSTEMS

3. AUTHOR(S)

J.P. CALI, T.W. MEARS, R.E. MICHAELIS, W.P. REED, R.W. SEWARD, C.L. STANLEY, H.T. YOKKEN AND H. H. KU

4. DOCUMENT DATE: JANUARY 1975

5. NUMBER OF PAGES: 59 PAGES

6. ARC NUMBER: ARC 389.6-C153

7. REFERENCE ORGANIZATION NAME AND ADDRESS

U.S. DEPT.OF COMMERCE
NATIONAL BUREAU OF STANDARDS
WASHINGTON, D.C. 20234

8. SUPPLEMENTARY NOTES *(Sponsoring Organization, Publishers, Availability)*

9. ABSTRACT

This publication is a guide to the use of Standard Reference Materials (SRM's) and should be useful to all users of SRM's particularly those in countries developing national measurement systems. It is not intended to be an exhaustive description of the NBS-SRM program, but rather a review of the role SRM's play in the measurement system, how SRM's are certified, and what the certification means. To illustrate the use of SRM's, several selected industries are described in which SRM's have significant contributions.

10. CONTROL NUMBER: PN-AAB-040

11. PRICE OF DOCUMENT:

12. DESCRIPTORS

CERTIFICATION, MEANING OF MEASUREMENT, MEASUREMENT, PRECISION, REFERENCE METHOD, SPECIFICITY, SYSTEMIC ERROR

13. PROJECT NUMBER: 931-11-995-910

14. CONTRACT NUMBER: TA(CE)5-71

15. TYPE OF DOCUMENT: MONOGRAPH

AID 590-1 (4-74)

NBS MONOGRAPH 148

U.S. DEPARTMENT OF COMMERCE / National Bureau of Standards

The Role of Standard Reference Materials in Measurement Systems

NATIONAL BUREAU OF STANDARDS

The National Bureau of Standards[1] was established by an act of Congress March 3, 1901. The Bureau's overall goal is to strengthen and advance the Nation's science and technology and facilitate their effective application for public benefit. To this end, the Bureau conducts research and provides: (1) a basis for the Nation's physical measurement system, (2) scientific and technological services for industry and government, (3) a technical basis for equity in trade, and (4) technical services to promote public safety. The Bureau consists of the Institute for Basic Standards, the Institute for Materials Research, the Institute for Applied Technology, the Institute for Computer Sciences and Technology, and the Office for Information Programs.

THE INSTITUTE FOR BASIC STANDARDS provides the central basis within the United States of a complete and consistent system of physical measurement; coordinates that system with measurement systems of other nations; and furnishes essential services leading to accurate and uniform physical measurements throughout the Nation's scientific community, industry, and commerce. The Institute consists of a Center for Radiation Research, an Office of Measurement Services and the following divisions:

Applied Mathematics — Electricity — Mechanics — Heat — Optical Physics — Nuclear Sciences[2] — Applied Radiation[2] — Quantum Electronics[3] — Electromagnetics[3] — Time and Frequency[3] — Laboratory Astrophysics[3] — Cryogenics[3].

THE INSTITUTE FOR MATERIALS RESEARCH conducts materials research leading to improved methods of measurement, standards, and data on the properties of well-characterized materials needed by industry, commerce, educational institutions, and Government; provides advisory and research services to other Government agencies; and develops, produces, and distributes standard reference materials. The Institute consists of the Office of Standard Reference Materials and the following divisions:

Analytical Chemistry — Polymers — Metallurgy — Inorganic Materials — Reactor Radiation — Physical Chemistry.

THE INSTITUTE FOR APPLIED TECHNOLOGY provides technical services to promote the use of available technology and to facilitate technological innovation in industry and Government; cooperates with public and private organizations leading to the development of technological standards (including mandatory safety standards), codes and methods of test; and provides technical advice and services to Government agencies upon request. The Institute consists of a Center for Building Technology and the following divisions and offices:

Engineering and Product Standards — Weights and Measures — Invention and Innovation — Product Evaluation Technology — Electronic Technology — Technical Analysis — Measurement Engineering — Structures, Materials, and Life Safety[4] — Building Environment[4] — Technical Evaluation and Application[4] — Fire Technology.

THE INSTITUTE FOR COMPUTER SCIENCES AND TECHNOLOGY conducts research and provides technical services designed to aid Government agencies in improving cost effectiveness in the conduct of their programs through the selection, acquisition, and effective utilization of automatic data processing equipment; and serves as the principal focus within the executive branch for the development of Federal standards for automatic data processing equipment, techniques, and computer languages. The Institute consists of the following divisions:

Computer Services — Systems and Software — Computer Systems Engineering — Information Technology.

THE OFFICE FOR INFORMATION PROGRAMS promotes optimum dissemination and accessibility of scientific information generated within NBS and other agencies of the Federal Government; promotes the development of the National Standard Reference Data System and a system of information analysis centers dealing with the broader aspects of the National Measurement System; provides appropriate services to ensure that the NBS staff has optimum accessibility to the scientific information of the world. The Office consists of the following organizational units:

Office of Standard Reference Data — Office of Information Activities — Office of Technical Publications — Library — Office of International Relations.

---

[1] Headquarters and Laboratories at Gaithersburg, Maryland, unless otherwise noted; mailing address Washington, D.C. 20234.
[2] Part of the Center for Radiation Research.
[3] Located at Boulder, Colorado 80302.
[4] Part of the Center for Building Technology.

THE ROLE OF STANDARD REFERENCE MATERIALS IN MEASUREMENT SYSTEMS

J. P. Cali, T. W. Mears, R. E. Michaelis, W. P. Reed,
R. W. Seward, C. L. Stanley, and H. T. Yolken

Office of Standard Reference Materials
Institute for Materials Research
National Bureau of Standards
Washington, D.C. 20234

and

H. H. Ku

Applied Mathematics Division
Institute for Basic Standards
National Bureau of Standards
Washington, D.C. 20234

U.S. DEPARTMENT OF COMMERCE, Frederick B. Dent, *Secretary*
NATIONAL BUREAU OF STANDARDS, Richard W. Roberts, *Director*

Issued January 1975

Library of Congress Catalog Card Number: 74-600196

National Bureau of Standards Monograph 148

Nat. Bur. Stand. (U.S.), Monogr. 148, 54 pages (Jan. 1975)

CODEN: NBSMA6

U.S. GOVERNMENT PRINTING OFFICE
WASHINGTON: 1975

For sale by the Superintendent of Documents, U.S. Government Printing Office, Washington, D.C. 20402
(Order by SD Catalog No. C13.44:148). Price $1.15

Preface

This publication has been prepared as an aid to all users of Standard Reference Materials, and should be especially helpful to users in countries that are developing national measurement systems. Standard Reference Materials (SRM's) represent one aspect of the total measurement system needed to produce adequate measurements for science, technology, and industry. This publication attempts to describe the role SRM's play in the total measurement system, but is not intended to be an exhaustive description of the NBS-SRM program.

The information contained in this publication must be viewed within the context of the individual nation's measurement needs and priorities, which of course vary from country to country. Further, this information should be useful not only to new industries, but also to mature industries seeking to improve their quality control procedures.

This publication covers the role of SRM's in a measurement system, both general and specific uses of SRM's, and selected fields in which SRM's have made significant contributions.

The desirability of a general publication on the use of Standard Reference Materials has long been recognized. However, the initial impetus to undertake such a task came from the U.S. Agency for International Development (U.S.A.I.D.) as part of their program to provide technical assistance to developing countries. U.S.A.I.D. also furnished partial financial support for this endeavor.

For further information on Standard Reference Materials, write to the Office of Standard Reference Materials, National Bureau of Standards, Washington, D.C. 20234.

Contents

	Page
Preface	iii
I. Introduction	1
A. The Measurement Process	1
B. Compatibility in Measurement	2
C. Meaningful Measurement	2
D. A Systems Approach to Meaningful Measurement	3
E. Economic and Social Costs of Making "Bad" Measurements	7
References	8
II. Considerations for the Use of SRM's	9
A. Proper SRM Selection	9
B. Potential Pitfalls in Standards Usage	10
C. Special Handling and Storage	11
D. Sources of Information on NBS-SRM's	11
References	12
III. Certified Values and Their Meaning—Uncertainties	13
A. Material Variability	13
B. Measurement Errors	14
C. Instrument and Operator Errors	16
D. Differences Among Measurement Methods	16
E. Uncertainties of Certified Values	17
F. Statements of Uncertainty of SRM Certificates	17
References	18
IV. Specific Areas of Use for SRM's	19
A. Metals Industries	19
References	22
B. Rubber Industry	22
References	23
C. Nuclear Measurement System	23
References	24
D. Inorganic Standards	24
Sources of Information	25
E. The Clinical Measurement System	26
References	31
Appendices	34

Standard Reference Materials: The Role of SRM's in Measurement Systems

J. P. Cali, T. W. Mears, R. E. Michaelis, W. P. Reed, R. W. Seward, C. L. Stanley, and H. T. Yolken

Office of Standard Reference Materials
Institute for Materials Research, National Bureau of Standards, Washington, D.C. 20234

H. H. Ku

Applied Mathematics Division
Institute for Basic Standards, National Bureau of Standards, Washington, D.C. 20234

This publication is a guide to the use of Standard Reference Materials (SRM's) and should be useful to all users of SRM's particularly those in countries developing national measurement systems. It is not intended to be an exhaustive description of the NBS-SRM program, but rather a review of the role SRM's play in the measurement system, how SRM's are certified, and what the certification means. To illustrate the use of SRM's, several selected industries are described in which SRM's have made significant contributions.

Key words: Certification; meaningful measurement; measurement; measurement system; precision; reference method; specificity; SRM; standard; Standard Reference Material; systematic error.

I. INTRODUCTION

Standard Reference Materials represent one facet of the national measurement system in the United States. Before describing the role they play, the meaning of measurement must first be discussed.

Most measurements are made to communicate information on properties of material things in a purposeful way to accomplish useful goals. Communications can be effective or ineffective. In parallel, measurements can be meaningful or not meaningful. Meaningful measurements allow us to make decisions on a solid, objective basis. For example, a transaction involving 10 kilograms of sucrose of 99 percent purity is likely to cause little controversy between buyer and seller, because analytical instruments and scales are available to determine 99 percent purity and 10 kilograms to within some specified degree of tolerance. On the other hand, measurements of fragrance and taste on a scale of desirability are still highly subjective, and decisions based on results of "experts" are frequently subject to controversy.

The principle difference in the two situations is that the first involves numbers associated with distinct, well-defined properties, while the second does not. To see what constitutes meaningful measurements, and how they may be propagated throughout the industrial and technological communities, the measurement process must be examined.

A. The Measurement Process

The Measurement in science and technology is that process whereby a numerical value is associated with a distinct, specific, and unique property of a material. The magnitude of the number is related to the amount or degree of that property in a particular material or similar class of materials. The word "material" is taken in its broadest sense to include all those things considered to constitute the physical objects of the observable universe.

In 1939, Shewhart [1] [1] pointed out two aspects of the measurement process that he described as quantitative and qualitative. The former aspect concerns numbers associated with a scale, pointer reading, counter, or the like. In much of this publication, this quantitative consideration will be associated with a well-characterized material, called a Standard Reference Material (SRM). In these materials, one or more properties will have a number of numbers assigned in a manner analogous to the numbers associated with a meter stick, although in many instances the SRM will have one, unique value, rather than a series of incremental values. Thus, while a meter stick may have numerous divisions of the meter along its length, a copper alloy SRM will have just one number associated with its copper content. In any case, the SRM represents the quantitative aspect of measurement, especially useful where composition is the property under

[1] Figures in brackets indicate the literature references at the end of each chapter.

measurement. The qualitative aspects of measurement are included in what is often called the procedure, or the method. Included in this factor are such things as apparatus, reagents, indeed all those things that are used or can affect the course of the measurement. Obviously, the experimenter or measurer, the sequence of operations, control of the ambient conditions, etc., must be stated in the written method used by the operator to make the actual measurements.

Experience over many centuries has taught man that, if he can agree on one universal set of coherent scales, he can more effectively communicate with his fellow man across time and geographical boundaries. In priciple, there is no logical reason why many different sets could not be utilized, as historically they have, but the economic, political, and social benefits of one universal set are so apparent, that most of the world's nations have now agreed to use the set of measurement scales called the International System of Units (Système International d'Unités) and abbreviated as SI. This rational, self-consistent system of units of measurement includes the base units (mass, length, time, electric current, thermodynamic temperature, luminous intensity, and the mole), and the derived units (area, density, energy, etc.), together with rules for their use [2, 3].

Having defined the units, access to the units is provided through highly refined measurement processes. In some cases one can reconstruct the unit, in others one relies on artifacts such as sets of weights, gauge blocks, and the like whose magnitudes in terms of the unit have been carefully established—especially when the magnitudes met in local measurement practice are far removed from (i.e., are large multiples or small fractions of) the base unit. The uncertainty in the use of such reference standards is a function of both the method and the process precision. The uncertainty of the assigned value of the reference standards becomes a systematic error of the process in which the artifact is used.

B. Compatibility in Measurement

If measurements between nations, between industries, between buyer and seller, indeed between any two or more parties are to be useful for some realizable purpose, the measurements must be compatible. Assume two different laboratories measure the same specific property on samples taken from the same lot of a stable material. If the two independently determined values agree, the two measurements, and hence, the two laboratories are said to be compatible. The critical question is, "Agree within what limits?" In practical measurement situations, these limits should be defined in terms of the useful end requirements. Having established the limits, one is concerned with verifying that the results of the measurement are compatible with the limits.

Dr. Robert D. Huntoon, former Director of the NBS Institute for Basic Standards, discussed fully his concept on the importance of compatibility at the 6th Materials Research Symposium, Standard Reference Materials and Meaningful Measurements [4].

C. Meaningful Measurement

By definition, a measurement system produces the numerical value of the amount of a well-defined property of a material.

The technique by which such a numerical property of a material is obtained is called a measurement method. The use, or the realizations, of the method over time yields values produced by the measurement process.

The practical measurement processes of industry are varied and complex. In some instances, such as the measurement of the disintegration of nuclear particles using a radiation detector, the process is essentially a counting operation and therefore conceptually simple. However, in the majority of situations, the process is far more complex and consists of a sequence of operations, each of which may be a process of some complexity. At the end of this sequence of operations, a numerical result emerges together with an estimate of uncertainty. In most cases this result can be expressed in units according to an accepted system of base and derived units—for science and technology, that system is the SI. While every one could start with a fresh realization of the base units, the accumulative systematic error as one moves through the process can be large. Such an approach, in addition to being costly may not produce results that are within the desired limits. It is here that the role of SRM's emerges. The SRM serves a role similar to that of a set of weights or gauge blocks. With carefully prepared SRM's, the uncertainty of the result is mostly a function of the uncertainty of the SRM and the measurement process.

If a measurement process is to be meaningful, then the numerical values obtained should be *specific*, *precise*, and free of *systematic error* (or bias) within the agreed on or practical limits required for the end use. When these goals have been achieved, then the measurement results may be said to be accurate. Thus, by this definition, a meaningful measurement is termed an accurate measurement. A full and complete discussion of all concepts of accuracy is not appropriate for this publication as it is a subject that measurement scientists are not completely agreed upon in all of its ramifications. (For detailed discussions on the term "accuracy," see references [5, 6].)

1. Specificity.

During the measurement process, only the property under test must be measured, and not some

combinations of properties that may give the false impression of singularity. Non-specificity can be considered a special case of systematic error, and could be included in that discussion. However, especially in the measurement of chemical composition, its insidiousness as a special source of error is so striking (when found) that special emphasis is warranted.

2. *Precision.*

A high degree of precision in a measurement process is demonstrated when essentially the same numberical value is repeatedly obtained. In some measurement circles, the measure of precision within the same laboratory is called repeatability; between different laboratories, reproducibility. (Alternatively, the terms, "intra-" and "inter-laboratory" precision, respectively, are often used.) The interplay and complications of varying degrees of inaccuracy with varying degrees of imprecision in a measurement process are discussed in depth by Eisenhart [6]. In practice, as opposed to theoretical considerations, a high degree of accuracy is usually positively correlated with a high degree of precision. *But*, also in practice, highly precise systems are sometimes found to be highly inaccurate. This is a real danger and must be carefully considered. More detail on this is presented in Chapter III (B).

3. *Systematic Error.*

The third requirement for a measurement to be meaningful is that it be free of systematic error. When systematic errors are present then the numerical result differs from the "true value." From a practical point of view for the large majority of measurements made in industry and technology, the "true value" can be considered in an operational sense. This requires that a careful assessment be made of the systematic errors in each step of the measurement process. When the systematic errors have been identified and eliminated, the resulting numerical value can be equated to the "true value." Furthermore, the value obtained by this process should be essentially the same as that obtained by any other acceptable process used to measure the same property of the same material.

4. *Other Desirable Characteristics.*

There are, of course, other desirable attributes of measurement—sensitivity of detection, a large dynamic range, ease of operation, speed, low cost, and several others. These, however, are pragmatic considerations by and large, while specificity, precision, and freedom from systematic error are absolute essentials to the attainment of meaningful measurement. The use of SRM's in measurement will be shown to have some impact in attaining many of these other desirable attributes.

D. A Systems Approach to Meaningful Measurement

There are several ways in which a meaningful measurement system can be built, maintained or expanded. Many of these modes are now in operation in various sciences, industries, and technologies. Principal among these are: calibration services, especially for instruments calibrated at a central, competent source and returned to the user; publication of standard reference data, which if critically evaluated and given together with the detailed measurement procedure, allows others to use the data directly or to reproduce the original measurements; the provision of measurement signals (time interval, frequency, etc.) via a central source to users; transfer through methodology dependent upon locally produced materials of realizable purity and stability (e.g., specification of the purity of platinum used to realize the candela); manufactured devices and/or materials made available to produce compatibility in a narrow field on a relative rather than absolute (or accuracy) basis.

In this discussion emphasis will be placed on a meaningful measurement system based on SRM's and reference methodology. Together, these provide a mechanism whereby compatibility can be transferred with speed and modest cost into practical measurement fields. There are five major components of this system that will be described, some in more detail than others. The relationships of these components are shown in figure 1.

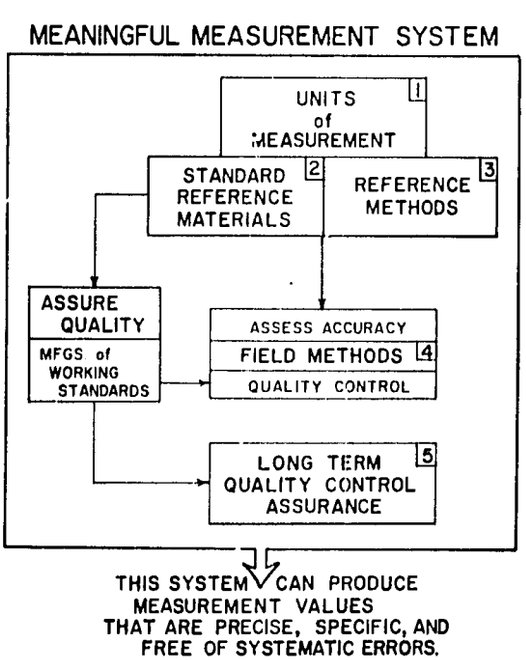

FIGURE 1.

1. *Component 1—A Rational, Self-consistent System of Units of Measurement.*

As stated earlier, international agreement on a large scale has been reached to make this system the SI. In scientific measurement areas (metrology, physics, chemistry, etc.) the SI is now used on a wide scale. Full implementation has not yet occurred, primarily in areas of industrial technology. The most obvious example is that of the U.S. where many engineering and technical measurements are still made and reported in non-SI units. Hopefully, this situation will be resolved within the next 10 years or so, since a recommendation has been made to the U.S. Congress that the U.S. "go metric" (i.e., adopt the SI) [7]. For well over 90 percent of the SRM's issued in the U.S. through NBS, the properties are given in SI units, although the corresponding non-SI units may also be reported. For some engineering oriented SRM's, arbitrary, non-coherent units are used where the SRM is made part of a test recipe (e.g., the "flame spread index" of the Surface Flammability SRM). For purposes of this publication, component 1 is the SI, even though occasionally certain exceptions must be taken.

2. *Component 2—The Materials to Realize in Practice the SI Units and Their Derivatives.*

To realize (or determine) the SI unit candela, platinum of a specified and known purity is necessary because the candela is defined in terms of the radiation of a black body at the freezing temperature of *platinum*. In carrying out this determination a rigorously written procedure will also be specified and the eventual accuracy will depend on both the purity of the platinum and the adequacy of the method. Such methodology is called a reference method (see, Component 3, next). Similarily, if the mass of copper in an industrial copper alloy is to be determined with known accuracy, so that compatibility throughout the copper industry is to be propagated, then a copper alloy of known copper content and a reference method of analysis to specify the actual steps in its determination must be available.

In much of the world, these well-characterized materials are called Standard Reference Materials (SRM's) and are prepared, measured, and certified, in most instances, by national standards laboratories. At NBS, the formal definition of an SRM, which includes these primary uses, is given in figure 2. Examples of these uses, for specific areas of technology, are included in later chapters of this publication.

The key characteristic of an SRM is that the properties of interest be measured and certified on the basis of accuracy. At NBS there are three routes that are used to accomplish this goal.

A Formal Definition of NBS Standard Reference Materials (SRM's)

SRM's are well-characterized and certified materials, produced in quantity:

(1) To help develop reference methods of analysis or test; i.e., methods proven to be accurate.

and/or

(2) To calibrate a measurement system in order to:

(a) Facilitate the exchange of goods

(b) Institute quality control

(c) Determine performance characteristics

(d) Characterize at scientific frontiers

and/or

(3) To assure the long-term adequacy and integrity of the quality control process.

thus

Ensuring the Compatability and Meaningfulness of Measurement in the Nation

for

. . . Science and Technology
. . . Production and Distribution of Goods and Services
. . . Government

FIGURE 2.

(a) Measurement of the property using a previously validated reference method. By definition, a reference method is a method demonstrated to be accurate. When such a method exits, then any unknown material (falling within the scope and limitations of the method) may have its property measured accurately. To minimize the possibility of personal bias, or other unforeseen difficulties, two or more analysts, working independently, but using the same methodology, must perform the work. Table 1 gives an illustration of this route of measurement.

TABLE 1. *SRM 610—Trace elements in glass*
(Lead at 500 ppm—nominal)

Rod No.	Analyst 1	Analyst 2
2	426.5	— — —
13	426.2	— — —
18	425.6	425.9
48	426.1	426.0
56	426.9	425.0
66	426.0	425.4
78	426.2	425.6
106	425.7	— — —
Average	426.15	425.58
σ	±0.41	±0.40
95% L.E.	±.98	±1.11

(b) Where previously established reference methods do not exist, then two or more independent, reliable measurement methods are used. A reliable method is one of high precision, but one whose systematic biases have not been fully discovered and evaluated. In this route, the *estimated* systematic biases of each method are evaluated by the analyst and must be small relative to the overall uncertainty of the final certified value. Table 2 illustrates this route.

TABLE 2. *SRM 1577—Bovine Liver*
(Cadmium by 2 or more independent methods)

Sample	Concentration ($\mu g/g$)		
	ID-MS	Atomic absorp.	Polarography
1	0.32	0.29	— — —
1	.29	— — —	— — —
2	.26	.24	0.26
2	.27	.26	— — —
3	.27	.26	.16*
3	.27	.27	— — —
4	.28	.24	.28
4	— — —	.27	— — —
5	— — —	.30	.28
6	.26	.26	— — —
X	.28	.27	.27
2σ	.04	.04	.01

Range (all results) 0.24 — 0.32
Recommended value 0.27 ± 0.04

*Outlier, discarded for sound reasons.

(c) The third route is a variation of the second. Where a previous issue of an SRM is available to be used to assure intralaboratory quality control, then many laboratories can be formed in an *ad hoc* network to perform the work. Each laboratory uses the method felt to be most reliable (and accurate) under that laboratory's operating conditions, *but* must run the prior SRM in parallel with the unknown as a check. The results will be used only when the certified value of the prior SRM is obtained. Obviously, only laboratories of the highest technical competence and thoroughly knowledgeable and familiar with the particular material under study should participate in such work. At NBS, this route is most often used to measure and certify renewal SRM's. Renewal SRM's are replacements for SRM's the supply of which has been exhausted; they are materials closely similar to the original SRM's. Table 3 illustrates this route.

TABLE 3. *SRM 337—Basic Open-Hearth Steel*
(Carbon by interlaboratory comparison)

Analyst	Method/variation (Note: Combustion step common to all)	Percent carbon
1	Gravimetric—1g sample	1.08
2	Gravimetric—3g sample	1.06
2	Volumetric—1g sample	1.06
3	Gravimetric—factor weight (2.73 g) sample	1.06
3	Gasometric—1g sample	1.07
4	Gravimetric—half-factor weight (1.36 g) sample	1.06
5	Gravimetric—half-factor weight (1.36 g) sample	1.08
5	Thermal conductivity—0.7 g sample	1.08
6	Gravimetric—0.7 g sample	1.07
Mean		1.07

4 Different methods
6 Different sample weights

All Labs used SRM 16d as control

Finally, in the definition of an SRM, the phrase "produced in quantity" has important implications for anyone considering SRM's as an integral part of their quality-control process. At NBS, a six to ten year supply of an SRM is usually produced at the time of certification. As the supply of an SRM gets low, a renewal SRM is planned. This assures all users of an adequate, continuous, and reliable source of supply, so that the quality control of their measurement procedures may be maintained and improved on a continuing basis over the life of their operations.

3. *Component 3—Reference Methods of Measurement Used With or Base on SRM's.*

A reference method is defined as "a method of proven and demonstrated accuracy." These have been called variously: umpire methods, referee methods, standard methods, and so forth. In any

case, the operational definition just given is the crux of the matter, although international agreement on a descriptor would help to avoid future misunderstanding. Absolute accuracy, implying methods with *no* systematic biases, is an unattainable goal, not achievable by mere mortals. It is important to realize that the cost of obtaining greater accuracy increases exponentially. Therefore, only that degree of accuracy required should be sought, making allowance for further advances in the current state-of-the-art. A good guideline is to strive for a reference method whose accuracy is three times better than that currently required by the end use.

The development of reference methods is a time-consuming, expensive, and complex process, involving these steps (although permutations are possible).

(1) A group of experts surveys the literature to choose a candidate method—one expected to have small systematic biases. They also decide what the accuracy goal should be for the reference method, considering the required end use.
(2) A central laboratory is chosen to: coordinate the work; develop the statistical design; prepare and distribute samples that have been previously measured by the central laboratory using an independent method of known accuracy, but one not usually available to the field in question; and distribute the SRM—a necessary precondition is the availability of the appropriate SRM.
(3) The group of experts, in conjunction with the central laboratory, writes the first version of a detailed procedure (protocol), and helps select a group of measurement laboratories (usually 6 to 10 laboratories) willing to cooperate in performing the work called for in the protocol.
(4) The central laboratory distributes the protocol, sample, SRM, and instructions to the cooperating laboratories. The cooperating laboratories perform the work according to a schedule. The analytical data plus other pertinent information are returned to the central laboratory.
(5) The group of experts and qualified personnel from the central laboratory, including statisticians, analyze the data, identify sources of error and then revise the protocol to eliminate them.
(6) Steps 4 and 5 are repeated as often as necessary until the accuracy goal is achieved.
(7) The protocol is written in final form and published in a journal, a collection of reference methods, or another appropriate publication.

A recently developed reference method in clinical chemistry, which illustrates the conditions just set forth, is that for the determination of calcium in serum [8].

The number of reference methods, world-wide, is discouragingly small, and in view of the needs, an interim solution to this question of accuracy may have to suffice for now. Some scientists have proposed accuracy by edict, a scheme whereby experts declare a particular method to be the accurate method against which all other alternative methods will be assessed. If the method chosen by edict is carefully selected and some modest interlaboratory testing done, then this interim solution may meet present pressures. This approach should assure compatibility at least.

In the long run no substitute exists for the hard, scientific work that establishes in the laboratory the accuracy of the analytical method.

4. Component 4—Establishment of Compatibility into a Wider Area of Technology via the SRM and Reference Method.

Components 1, 2, and 3 are sufficient in themselves to bring about accurate measurements in a few well-qualified laboratories. The real problem is, however, to improve the quality of and make compatible the measurement in the average laboratory on a routine basis. There are two aspects to this problem, one involving the field (routine) methods per se, the other concerned with commercially produced (or in-house) working standards.

Assessment of field methods. As reference methods and SRM's become available, responsible groups should begin the assessment of the various field methods currently in use. When the test materials to be used in the assessment process are characterized on an absolute (accuracy) basis via the reference method and SRM, the inaccuracies of the tested field methods will become readily apparent. Alternatively, in some cases, an SRM can be used alone for this purpose. As the testing data accumulate and become widely disseminated, a selection process will occur, and highly inaccurate methods will tend to fall into disuse and eventually disappear. For those field methods having desirable characteristics (speed, low-cost, etc.) it should be possible to correct or eliminate any systematic biases found, thereby placing them, in turn, on an accurate basis.

Many reference methods will not be suitable (because of complexity, cost, or lack of speed) for use in daily routine practice. Furthermore, not every laboratory will have the facilities or instruments required by the reference method, while other laboratories may prefer to determine some constituents through use of simpler methods. Indeed, it is not necessary nor even desirable to do away with present field methods, as long as they are tested against the reference method.

Upgrading the quality of working standards. Given SRM's and reference methods, the manufacturers of working, or secondary standard materials, including reagents, and instruments will be able to test those products for accuracy. In the U.S., some manufacturers already are using SRM's, where available, to test the quality of their reagents and secondary standards. Without reference methodol-

ogy, this testing must necessarily be on a relative rather than an absolute basis.

The implementation of these assessment activities is more complex and difficult, than those of Components 1, 2, and 3. Modes of implementation, including legal requirements, differ from country to country. In the U.S., standardization in most fields of technology is strictly a voluntary process, as opposed to the practice in many nations where standardization procedures are usually legally imposed. Agreement on the quality of products moving in international trade is possible and current trends indicate that efforts in this direction are increasing.

5. Component 5—Assuring the Long-Term Integrity of the Measurement Process.

Measurement systems are notorious in one respect. Unless carefully monitored, they tend to get out of control. Loss of precision is usually the first indication that the measurement process is not in a state of quality control. In most measurement laboratories, this question is one of almost daily concern and one that has been extensively studied and addressed. Although each individual laboratory must ultimately be responsible for assuring its own quality control, professional societies and governmental agencies can, and often do, provide a mechanism that helps to assure, to a degree, long-term quality control.

If SRM's and reference methods are available, the mechanism for assuring the long-term integrity of the measurement process in a large number of measurement laboratories is quite straightforward:

(a) The sponsoring or testing agency prepares a series of test samples incorporated in a suitable matrix that cover the range of values likely to be encountered in real life.

(b) The properties are determined by the sponsors' laboratory (or laboratories) using the reference method to obtain values of known accuracy.

(c) The test samples, as unknowns, are distributed with suitable instructions and reporting forms to the laboratories under test who perform the work as instructed. In true blind studies, these samples will not be differentiable from daily, routine samples.

(d) Results are returned to the sponsoring agency and statistically analyzed. In a well-designed and controlled program, each laboratory should receive back the following information for each property tested: its day-to-day precision within the laboratory; the accuracy of the method used; its rank compared to other laboratories using the same methodology; the accuracy of its method compared to alternative methods; a statement of acceptability of the results (if norms for that technology have been established).

E. Economic and Social Costs of Making "Bad" Measurements

In today's highly technological society, the costs of making "bad" measurements can be monumental. On the other hand, the benefits that can accrue from "good" measurements, both economically and socially, can be equally large. A measurement system that is non-compatible is obviously a wasteful system. In such systems, the transfer of useful measurement data across different technological or geographic boundaries becomes difficult or impossible, and certainly wasteful. In measurement systems not in a constant state of quality control, the expenditure of a significant portion of the available measurement time in redoing measurements obtained during the out-of-control period is not uncommon. The examination of two large U.S. industries illustrates the economic side of measurements. The first is that of the U.S. steel industry, whose measurement system is long established and well under control. The second is the U.S. "health" industry, especially clinical chemistry, which has areas in which lack of agreement between laboratories has received publicity.

1. The Steel Measurement System in the U.S.

In the U.S. today the quality and composition of well over 90 percent of all the steel produced is maintained or measured through a measurement system based on the concepts outlined. Over 300 SRM's are made available by NBS to cover essentially all of the major steels produced. Reference methods developed over many years are maintained and published primarily through the American Society for Testing and Materials (ASTM), a standards body strongly supported by the steel industry. The manufacturers of the working standards check and maintain their quality against the primary NBS–SRM's. Long-term quality control is a constant activity of the various steel producers' laboratories working in collaboration with the various technical committees of the ASTM. Through implementation and maintenance of their measurement system, steel producers and users routinely produce results with an accuracy of 1 to 2 percent, making more than one-half billion (5×10^8) analyses every year, with turn-around times of 3–5 minutes from the time the sample is taken to the time the analytical results are available.

The cost per analysis of steel by spectrographic means is between one and two dollars. If the present measurement system used in the steel industry eliminated only 1 percent of the "bad" analyses (and the figure over many years has been much higher than this), then the current, direct saving today is at least $5,000,000 per year.

2. The Clinical Chemistry Measurement System in the U.S.

The situation in clinical chemical measurements is vastly different. Because the work load in clinical

chemical laboratories increased so dramatically over the past few years, hand methods of analysis were replaced by automated methods of unknown accuracy, and in many instances, of unknown specificity. Furthermore, no reference methods as defined herein existed in clinical chemistry whereby the new automated methods could be assessed. Imposed on the system also were shortages of trained personnel, a rapid proliferation of instruments and new methodologies, the need for very fast response times, etc. In short, meaningful measurement throughout large segments of the system did not exist. It should be added, however, that scientists and physicians in this area are fully aware of these problems and are instituting on a national basis those steps necessary to bring about meaningful measurement.

Meanwhile, the economic costs of the current situation are very high. In the U.S. in 1973, according to one source [9], approximately 3×10^9 clinical tests will be performed by the nation's 12,500 clinical laboratories. The director of a large hospital clinical laboratory estimates that from 10 to 25 percent of all measurements made must be repeated because of error, or are sufficiently unreliable as to provide no useful information to the physician, and are therefore worthless.

The cost per analysis in clinical chemistry is one to two dollars. If the situation is no worse than the 10 percent mentioned above, then the current (1973) cost of "bad" measurements will be at a minimum, $\$3 \times 10^8$. The potential savings in this field alone would pay several times over the total per year investment of all the world's standards laboratories for the production, measurement, and certification of SRM's.

3. *Social Costs.*

Social costs of "bad" measurements are not so readily assessed. Such costs do exist, however, as one small example will show. In 1971, the editors of the *San Francisco Examiner* were interested in the degree of contamination of San Francisco Bay. Samples of mud were sent as unknowns to three local measurement laboratories. The results for four contaminants are shown in table 4. These data are meaningless in terms discussed in this publication. From such discordant data, only fruitless controversies will arise, which will tend to obscure the real problems—in this case, the level of pollution in San Francisco Bay.

TABLE 4. *Results reported in San Francisco Examiner September 19, 1971 (in μg/g).*

	DDT	DDE	Mercury	Lead
LAB 1	0.80	2.80	0.80	3.30
LAB 2	.68	1.20	.10	21
LAB 3	.14	0.47	.10	50

References

[1] Shewhart, W. A., Statistical Method from the Viewpoint of Quality Control, Dept. of Agriculture, (Washington, D.C. 1939).

[2] Metric Practice Guide, ASTM, E-380-70 (1970).

[3] ISO Recommendation R 1000, reprinted by ANSI (New York, New York, 1969).

[4] Huntoon, R. D., Standard Reference Materials and Meaningful Measurements—An Overview (Proceedings, Sixth Materials Research Symposium, Gaithersburg, Md., Oct. 29, 1973). In Press.

[5] Ku, H. H., editor, Precision measurement and calibration, Vol. 1, Statistical concepts and procedures, NBS Spec. Publ. 300-1 (1969).

[6] Eisenhart, C., Realistic Evaluation of the Precision and Accuracy of Instrument Calibration Systems, J. Res. Nat. Bur. Stand. (U.S.) 67C (Eng. & Instr.) No. 2, 161-187 (Apr.-June 1963). Also available as Paper 1.2 in Reference 5.

[7] De Simone, D. V., A Metric America, Nat. Bur. Stand. (U.S.), Spec. Publ. 345 (1971).

[8] Cali, J. P., Mandel, J., Moore, L., and Young, D. S., A referee method for the determination of calcium in serum, Nat. Bur. Stand. (U.S.), Spec. Publ. 260-36, 136 pages (May 1972).

[9] Untitled news article, Lab World, 1246 (Nov. 1972).

II. CONSIDERATIONS FOR THE USE OF SRM's

The introductory chapter provided the rationale for using Standard Reference Materials and outlined their relationship to meaningful measurements. As such the preceding chapter presented an overview of the NBS-SRM program and the general concepts of SRM usage. In this chapter, other considerations that must be faced by SRM users are described.

SRM's are designed to provide analysts with the means to check or calibrate within their laboratory their entire measurement system by providing them with well-characterized materials—SRM's—and the analytical results of the characterization procedures—Certificates. As such, SRM's eliminate the need to ship instruments to a central calibration facility or to have inspection teams come to the laboratory.

The first problem facing the user or potential user is that of availability. Is the material he needs available as a well-characterized standard? What are the sources of availability? Next, the user must decide what grade of SRM is needed and what form is needed (solid, powders, liquid, gaseous).

All of these questions must be answered if the user is to make a rational decision. An overriding question that all users must answer is that of cost. Not only the cost of the actual SRM's or the cost of analysis, but especially the cost that would result by not using SRM's should be considered. The cost aspect is specific to each user and different in each case, and can only be discussed in general terms. The purpose here is to point out that cost is often a prime consideration in the use of SRM's.

This chapter is not designed to answer these questions, but rather to provide users with information to help them answer their own questions. Therefore, this chapter will cover the process of selecting appropriate SRM's and problems encountered in their use; and sources of information on NBS-SRM's.

A. Proper SRM Selection

Basically, SRM's have three possible uses. They may be used as "control" materials analyzed simultaneously with "unknown" materials; as "calibration" materials to calibrate instrumentation; or, as "known" materials in the development of new techniques or instrumentation. In each instance, the SRM provides the results that the analyst should obtain. Hence, the analyst is provided with the means for a critical examination of his entire measurement system.

The NBS-SRM program began with cast iron-chip standards provided by the American Foundrymen's Association. These metal standards together with those subsequently prepared by NBS were produced to meet the needs of the expanding American iron and steel industry in the early 1900's. These early standards, applicable to the analytical methods then employed, are typical of "control" standards. As "controls," the SRM's are analyzed simultaneously with the "unknowns" regardless of the specific test method used. When the analytical results obtained for the SRM agree with the certified values within stated limits, then the method of analysis is in control and the results obtained for the "unknown" are reliable. The methods used, such as gravimetry, titrimetry, and volumetry, are chemical methods and thus have a high degree of specificity and use relatively simple detection systems.

When an SRM is used as a "control," the method of measurement may be biased because of the matrix of the material; consequently, to avoid possible matrix effects, both the SRM and the unknown must have similar compositions. The degree of correspondence required is related to the selectivity of the method—the greater the selectivity, the less need for a one-to-one correspondence. In addition, three other factors should be considered: homogeneity of the unknown sample, sample size (of both SRM and unknown), and the acceptable degree of agreement (or disagreement) between the analyst's results and those certified for the SRM.

In any analytical work, sample size is a function of both material homogeneity and the analytical method. For NBS-SRM's, sample size is not normally specified because the material is homogeneous for the sample sizes normally required by the particular method for which the SRM was intended. For those SRM's where homogeneity may be a problem, the minimum sample size to be used is stated on the Certificate.

The types of methods using SRM's as "control" standards usually involve mass or volume measurements. As technology advanced, new demands were placed on the analyst giving rise to instrumental techniques. The absolute measurement of mass and volume were replaced by relative measurements, e.g., light intensity, plate density, or current. In many cases, the selectivity of the chemistry employed was replaced by the selectivity of the instrument in measuring a certain physical property, such as thermal conductivity. This resulted in a demand for new SRM's to calibrate the instruments. Because instrumental techniques are relative, i.e., they do not measure a chemical property directly, matrix effects must be closely examined and accounted for.

The first major use of "calibration" SRM's was in the preparation of emission spectroscopic curves in the early 1940's. These curves were strictly empirical in nature and had to be established by relating instrumental response to a series of SRM's. Examination showed that the response or shape of the analytical curves was affected by a variety of matrix effects, that included matrix composition and metallurgical condition of the specimen.

The impetus for SRM's to generate such curves came from the steel industry as did the original demand for "control" SRM's. The need for "calibration" SRM's was two-fold, first to standardize

analytical results from laboratory to laboratory and from run to run, and secondly to reduce the time required to analyze samples accurately so that analyses could be made quickly (3–5 minutes) during production of large batches of material. The problems that were encountered in the steel industry then are being faced today by many other segments of technology that are now using instrumental methodology, that is, the use of rapid, relative methods, to produce accurate analyses of a large number of samples in a relatively short period of time. Consequently, the use of SRM's for calibration work is of particular interest to a large and growing segment of both the scientific and technical communities because of the widespread use of instrumentation.

A variety of ways exists for using calibration SRM's to generate calibration curves. Usually one or more of the following problems must be considered:

(a) Matrix—the sample and the SRM's used to make the calibration curve should give the same instrumental response with respect to interferences from the matrix. The user must know what the possible interferences are and to what extent they might interfere.

(b) Calibration curves—when possible, the calibration curves should be prepared using two or more SRM's so that the value of the unknown is closely bracketed and may be interpolated from the curve. Unless the curve is supported by a proven theory, one point calibrations may be most unreliable. Extrapolation from such calibration curves may result in misleading conclusions if the analytical situation is not clearly understood.

(c) Physical condition—physical condition of SRM's and unknowns must be similar. For example, in x-ray fluorescence spectroscopy both SRM's and unknowns should have the same surface finish to obtain an equivalent instrumental response.

NOTE: Certified SRM's do not, by themselves, guarantee meaningful measurements, i.e., they do not obviate the prerequisite for trained, experienced personnel.

A third use of SRM's is for the development of new analytical methods. Perhaps a more general term would be scientific use. This use is characterized not so much by the need for precise measurement of a specific property, but more by the need to provide a common matrix material containing known concentrations of various elements for developing new measurement techniques. Such SRM's permit researchers in different locations to cooperate in developing new methods. For example, the development of the reference method for calcium in serum [1] was greatly simplified because a clinical SRM for calcium existed—Calcium Carbonate, SRM 915. Currently NBS issues SRM's for this purpose in several areas, e.g., trace elements in orchard leaves and trace elements in glass. Both of these SRM's contain a variety of trace elements—one is a botanical matrix similar to many biochemical and environmental samples, and the other is a silicate matrix similar to many rock-type samples of interest to geologists and others interested in minerals and ores. In addition, a special effort has been made to provide a few high-purity materials for use as source material for analytical method development, and in some cases, characterization of physical properties. The elements certified in this type of SRM are measured by several different techniques and possible interferences are identified. Such certification makes these SRM's invaluable for comparison of various measurement techniques.

The development of any SRM is generally undertaken to answer a specific measurement need. Once the SRM is prepared and knowledge obtained of its composition, homogeneity, physical condition, and other factors, it has often been found useful for a variety of other measurement needs. All of these needs, however, will encompass either control, calibration, or method development.

B. Potential Pitfalls in Standards Usage

Regardless of the end use, several other factors must be considered in the selection of the appropriate SRM. Two of these are the grade of the standard required and any special handling or storage requirements the user must follow to maintain the integrity of the standard. Standards are often discussed in general terms without a clear definition of what is meant by the word "standard." Various international and national scientific and technical groups have established official definitions for various grades of standards that pertain to their field. There is little agreement on these definitions among the various groups. At the National Bureau of Standards, when an adjective is used to describe the grade of an SRM, the adjective generally correlates with the definition given by the scientific group for which that SRM is most applicable. For inorganic chemicals, the International Union of Pure and Applied Chemistry (IUPAC) definitions regarding "primary," "working," and "secondary" standards are used. Thus, the IUPAC definition of a primary standard "a commercially available substance of purity 100 ± 0.02 percent," is used for NBS Primary Chemical Standards. A more detailed discussion of the classification of purity of chemicals is given in chapter IV, E, Reagent Chemicals. In the following discussion the use of the words "primary" and "secondary" does not necessarily conform to any specific definition of grades, but is used merely to distinguish between two "levels" or "grades" of standards.

Primary standards serve a specific need, but are not generally used on a daily routine basis. Rather they are used to ascertain the quality of secondary standards that would be used daily. Therefore the grade of the standard material to be used must be decided by the user based on the intended use.

Secondary standards come into existence in a variety of ways. Commercial firms, study groups, individual laboratories, or groups of laboratories may prepare and issue these standards. Ideally these standards should be related to and measured against the primary standards and therefore be more useful in the measurement system. Of course, each time accuracy is transferred along the measurement infrastructure an additional uncertainty is added. Therefore, the more measurement levels between the primary and the secondary standard, the greater the uncertainty will be. However, within a well controlled measurement system, using a reference method and a well characterized primary standard, the degree of degradation should not be great.

The use of primary standards issued by a recognized standards body and the use of secondary standards prepared by commercial firms or groups of laboratories strengthens the whole measurement system. Experience at NBS has shown that no one organization can possible supply all of the standard reference materials needed by one nation. Therefore, a national measurement system should include a recognized standards laboratory that produces primary standards, and another level of standards production that prepares secondary standards directly related to the primary standards.

Scientifically, the preparation of secondary standards provides a second group of scientists who compare the primary to the secondary standard and thus provides an important check on the quality of the primary standard. This independent checking of the primary standard provides an extra base of scientific skills and helps strengthen the measurement infrastructure.

The availability of lower-cost secondary standards promotes wider use of standards. Such availability reduces the demands upon the national standards laboratory to be the major supplier of all standards. This in turn permits the national standards laboratory to devote more of its resources to the development of other needed primary standards.

C. Special Handling and Storage

Any storage condition that would alter the certified value of a material must be avoided. Despite the obviousness of this statement, careful examination of storage conditions is mandatory to avoid many potential problems.

With inorganic materials, e.g., steel chips, little warning is necessary. Furthermore, the usual requirements for a standard is that it be stable, nonhygroscopic, and nonefflorescent in most atmospheres. These requirements tend to make standards easy to store. However, in most laboratories and industries, certain specific cases arise where standards must be used that do not have all of these properties. In such cases, storage and shipment involve real and serious problems. NBS has issued many SRM's that pose storage problems, but which are adequate for the intended purpose if properly handled. Some of these SRM's include coal, which contains volatiles; cement, which tends to hydrate; and SO_2 permeation tubes, which are affected by a high humidity. Careful laboratory storage of these SRM's in desiccators, sealed vials, amber bottles, and similar containers is usually called for. These are typical laboratory requirements, and should present no added problem for the user.

Storage in inventory and the packaging for shipment do however present difficult problems for a standards producer that must be solved to make a standard reliable and generally available. Here the nature of a material must be considered at the very start of an effort to produce a standard. With many new packaging materials available, a variety of ways exists to solve these problems and most materials can be suitably packaged for both storage and shipment.

Perhaps the major consideration for users in the storage of standards is that of maintaining the material's integrity in the period from certification to use. At NBS all SRM's are stored in sealed containers. Once the seal is broken by the user and the container is opened, the original contents may easily be contaminated. Thus in a laboratory situation, some policy concerning the use of standards must exist to prevent contamination. The integrity of a laboratory's measurement process rests on this consideration as much as with the analyst's technique and the reliability of his method.

D. Sources of Information on NBS SRM's

These sources of information include: SRM Certificates; SRM Catalogs and Catalog Supplements; a series of NBS Special Publications (the "260 Series"), specifically devoted to SRM's; brochures on selected groups of SRM's; and individual announcements of new SRM's. In addition, papers on SRM's and the SRM program are presented in technical publications and scientific meetings in the United States and other countries by NBS staff members.

The Certificate issued with an SRM is the single, most important source of information for a specific SRM. It is an integral part of the SRM as it provides the certified data, accuracy limits, instructions for the correct use of the SRM, and other pertinent information. With very few exceptions, each SRM is issued with some form of certification. The few exceptions are so noted in the Catalog with the reason for the exception.

The form of certification varies with the type of SRM. For SRM's certified for chemical composition, a "Certificate of Analysis" is issued. For engineering type standards and SRM's certified for a physical property, a "Certificate" is issued. Occasionally, such terms as "Certificate of Calibration" and "Certificate of Viscosity Values" have been used. In this publication no distinction is

made between different titles and for the most part the term "Certificate" is used.

For many years, NBS has issued some Certificates with the word "Provisional" printed on them. Although what was to be inferred from this word had never been formally explained, its intended use was to indicate that additional information would be made available at a later (usually unspecified) date.

The type of information to be made available would include such possibilities as:

(1) Some certified values were to be remeasured and recertified at higher levels of accuracy than was originally done.
(2) Some values given "For Information Only" were to be certified at a later date.

The use of the word "Provisional" has caused confusion among some SRM users and will no longer be used on future Certificates. Any technical limitations or restrictions that are necessary are stated on the Certificate.

The most valuable source of information for the selection of SRM's is the Standard Reference Materials Catalog issued by NBS. This Catalog lists and describes all of the SRM's available from NBS as well as many of the materials currently in the process of being certified. Supplements to the Catalog are issued periodically describing SRM's issued since the Catalog was printed, listing those no longer available, and giving current prices of SRM's.

Another valuable source of information is the series of NBS Special Publications devoted to Standard Reference Materials. Called the "260 Series," these publications are numbered as: 260–1, 260–2, etc., and all have as a main title, "Standard Reference Materials." The "260 Series" is dedicated to the dissemination of information on all phases of SRM's as related to meaningful measurement including the preparation, measurement, certification, correct use of NBS-SRM's, and the development of reference methods of analysis. In general, much more detail will be found in these publications than is generally allowed or desirable in scientific journal articles. These publications enable the user to assess the validity and accuracy of the measurement processes employed, to judge the statistical analysis, and to learn the details of techniques and methods utilized for work entailing the greatest care and accuracy. An additional purpose for these publications is to supplement the information given on the Certificate so that new applications may be developed in diverse fields not foreseen when the SRM was originally issued. Appendix A is a complete listing of the "260 Series."

A group of brochures that list SRM's prepared for specific fields is yet another effort to assist users in selecting SRM's. Some of these list additional SRM's that have a general applicability. The availability of each new SRM is announced by NBS through several mechanisms, primarily by direct mailing to users and potential users of SRM's.

A source of information that should be of particular interest to all SRM users is the "Proceedings of the 6th Materials Research Symposium, Standard Reference Materials and Meaningful Measurements" [2]. This symposium reviewed the SRM programs of several Governments and national and international organizations and the SRM needs and measurement problems in many industries and scientific disciplines.

References

[1] Standard Reference Materials. A Referee Method for the Determination of Calcium in Serum, Nat. Bur. Stand. (U.S.), Spec. Publ. 260–36, 136 pages (May 1972).
[2] Proceedings 6th Materials Research Symposium, Standard Reference Materials and Meaningful Measurements, Oct. 29–Nov. 2, 1973 (in press).

III. CERTIFIED VALUES AND THEIR MEANING —UNCERTAINTIES—

In the development of each SRM, assurances must be obtained that the material used is uniform and stable, that test methods yield repeatable and consistent results, and that the conditions under which the material is to be used are carefully described. Eventually, these qualitative statements will have to be translated into quantitative terms, using data generated from the tests, and condensed into a Certificate that will be understandable and useful to the user.

This condensation of information is no easy task! Ideally, the experimental conditions could be described in detail and all of the numerical values of individual determinations could be presented so that the user could judge how best to use these results. This has been done in a few cases and published in the "260 Series."

Generally, the cost and work involved in a detailed presentation is not justified in relation to the number of times it will be profitably used. In most cases, therefore, the data are processed and condensed into the form presented on the Certificate. The numerical values are normally expressed in two parts: the certified value of the property and the uncertainty of this value.

The uncertainty of the certified value denotes how well this value is known. A number of different expressions have been used for the statement of uncertainty, depending on how the SRM was developed, which group of scientists was involved, and the use for which it was intended. A number of commonly used expressions are described in this section.

In many cases, the statements of uncertainty are based, to a certain extent, on the subjective judgement of the scientists involved, rather than on a strict interpretation of the data. Acquisition of data is expensive, sometimes prohibitively so, and these factors must be weighed against the intended use of the SRM.

The uncertainty of the certified value of an SRM is made up of at least two components: inhomogeneity of the material and measurement errors. Regardless of the form of an SRM, none are issued with a guarantee that the property of interest is identical for each item in a lot. The homogeneity of the material is usually checked by a rapid method of analysis on selected portions of the bulk material, or on a randomly chosen number of items. If the results show that the variability of sampled material is within the specified limits, the material is accepted.

A. Material Variability

The selection of samples and the analysis of data are usually performed in consultation with a statistician. The emphasis here, depending on the form of material, is to detect trends or patterns; e.g., from one end to the other of a steel rod; from the center to the edge of a plate; from the top to the bottom portion of material in a drum; or to check on the variability of the material among ampoules and bottles. A proper, statistically designed experiment helps to assure that conclusions are valid, and to reduce the number of samples used to reach such conclusions.

The outcomes possible from homogeneity testing are:

(1) Homogeneity is not a problem, or material variability is negligible in relation to either measurement errors or to the use of the SRM (pp. 17–21, NBS 260–1);

(2) Material variability is a major factor in the total uncertainty, in which case the material is rejected, reworked, or each specimen is individually measured and certified; or

(3) Material variability is of the same magnitude as the measurement error, and must be included as a component of the uncertainty.

Of the three cases, the last is the one most frequently encountered. Two sub-classes are apparent: one where a trend is detected and one where no trend is detected.

Where a trend has been detected, e.g., along a steel rod to be cut into pieces, the unusable portion is discarded and, hopefully, the trend in the remaining portion is linear. In such a case, a line can be fitted to the values measured along the rod. The maximum departure from the average of points on the fitted line is taken as a measure of inhomogeneity, assuming measurement error is small in comparison to the trend.

Where no trend is detected, but the results of measurements showed variability that is not negligible, a statistical concept called "statistical tolerance interval" could be used. To illustrate this concept, suppose a solution is prepared and packaged into 1000 ampoules, of which 30 are analyzed. For this example, the tolerance limit concept states essentially that based on the measured values of the 30 ampoules almost all of the 1000 ampoules will not differ from the average of the 30 ampoules by more than the given limits. In statistical terms, it would read: "The tolerance interval (average $\pm\Delta$) is constructed such that it will cover at least 95 percent of the population with probability 0.99."[2]

This statement does not guarantee that the tolerance interval will include all of the ampoules. It says 99 percent of the time the tolerance interval will include at least 95 percent of the ampoules. The "99 percent of the time" refers to the way this tolerance interval is constructed, i.e., if 30 ampoules were selected from the population repeatedly, and the same experiment were performed over and over again, 99 percent of the tolerance intervals so con-

[2]The statement is true only for a population of infinite size; however, the correction for populations of finite size is negligible where finite size is large.

structed would cover at least the proportion (95%) of the total population as specified.

How is this interval constructed? First, the average and standard deviation from the 30 ampoules are computed:

Average: $$\bar{X} = \frac{1}{n} \sum_{i=1}^{n} X_i \qquad (1)$$

Standard deviation: $$S = \left[\frac{1}{n-1} \sum_{i=1}^{n} (X_i - \bar{X})^2 \right]^{1/2} \qquad (2)$$

where $X_1, X_2, \ldots X_i \ldots X_n$ are the measured values, with $n = 30$. Here $\bar{X}$ is an estimate of the mean, m, of the 1000 ampoules, and S is an estimate of the measure of the dispersion, σ, among these ampoules. These two values, $\bar{X}$ and S, contain practically all the information available on the 1000 bottles and can be used to calculate the tolerance interval "$\bar{X} \pm \Delta$."

The value of Δ is computed as a multiple of S, that is, $\Delta = KS$. The value of K depends on three parameters:

1. n: The number of samples measured (30),
2. P: The proportion of the total to be covered (95%), and
3. γ: The probability level specified (0.99).

A table of "factors for two-sided tolerance limits for normal distributions" [1] gives the value for K as 2.841 when $n = 30$, $\gamma = 0.99$, and $P = 0.95$.

The term "two-sided" means that we are interested in both over and under limits from the average. The term "normal distribution" refers to the distribution of all the values of interest and is a symetrical, bell-shaped distribution usually encountered in precision measurement work.

Figure 1 is a histogram of the ratios of the emission rate of ^{137}Cs in SRM 4233, ^{137}Cs Burn-Up Standard, to a radium standard, and frequency curve of a normal distribution can be fitted to these data.

There were 98 ampoules of ^{137}Cs involved; each ampoule was measured in April, September, and November, 1972. By averaging the three measurements, the measurement error was considerably smaller than the difference of weights of active solutions among these ampoules, and the plot showed essentially the inhomogeneity of the amount of solution in the ampoules.

Values of 30 ampoules were selected from the 98 values by using a random number table, and $\bar{X}$ and S are computed by expressions (1) and (2), giving:

$$\bar{X} = 0.11675, S = 0.000801$$

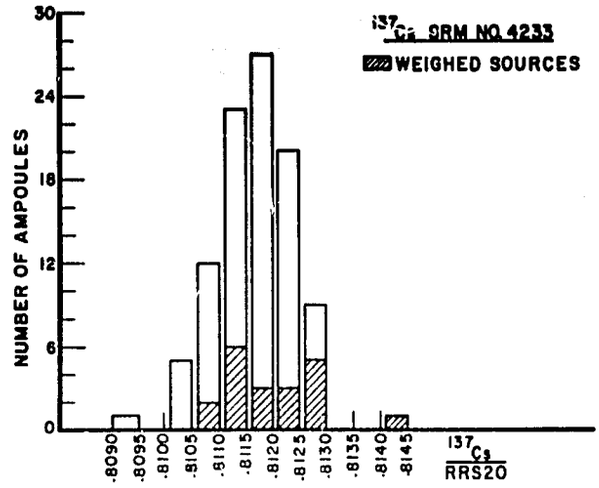

FIGURE 1. *Histogram of the frequency (number of ampoules) versus the ratio of the activity of Cs-137 standards to a radium reference standard, RRS20.*

The tolerance interval for at least 95 percent coverage with probability level 0.99 is $\bar{X} \pm KS$, or;

$$0.81168 - 2.841 \times 0.00080 = 0.80941$$
$$\text{to}$$
$$0.81168 + 2.841 \times 0.00080 = 0.81395$$

This interval covers the values of 96 ampoules, i.e., all except the single ampoule on the extreme left and the one on the extreme right.

If 30 values were selected repeatedly, the values of $\bar{X}$ and S would not be the same, but the intervals from $\bar{X} - KS$ to $\bar{X} + KS$ will have the property of covering at least 95 percent of all values 99 percent of the time.

Tolerance limits and interval are useful concepts when a finite number of samples are taken from a larger stock of material. As the number of samples, n increases, the value of K decreases and eventually settles down to 2 (actually 1.96) when $\bar{X} = m$, and $S = \sigma$. Over the years, however, chemists have resisted the use of this term mainly because the concept is somewhat complicated. The more conservative ones use a factor of 3, and sometimes the range between maximum and minimum is used.

B. Measurement Errors

In discussing measurement errors, the terms "precision," "systematic error or bias," and "accuracy" are usually used. The meanings of these terms are not rigidly fixed, but depend to a large extent on the interpretation and use of the data.

If two equally trained operators, A and B, make four analyses on a uniform material each day for 4 days on one instrument, and 4 days again on a similar instrument, the results, 16 sets of 4 measurements, may look like those in figure 2. What can be seen from this plot?

(1) The spreads among each set of four values are comparable, perhaps slightly smaller for Instrument II than Instrument I.
(2) There appears to be more variability between daily results than within sets of daily results, particularly for Instrument I.
(3) Operator B gives lower results than Operator A.
(4) Instrument I gives lower results than Instrument II.

Figure 2 is constructed for the purpose of demonstration, and actual measurements could be better or worse than shown. However, this plot does show some four types of factors that contributed to the total variability of these measurements: (1) factors acting within days, (2) factors acting between days, (3) factors due to instrument systems, and (4) factors due to operators.

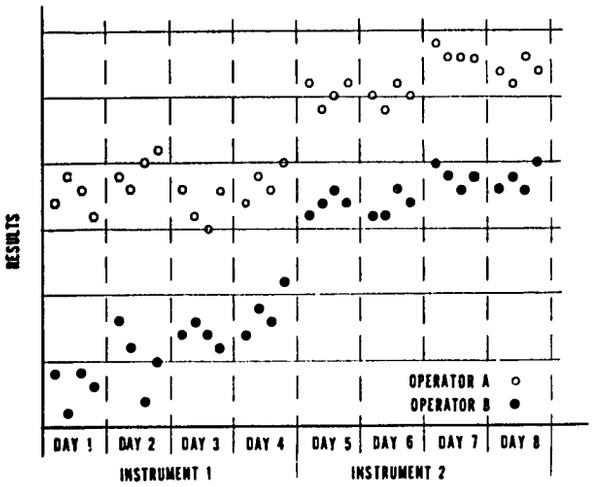

FIGURE 2. *An example of results of measurements by two operators using two instruments on eight different days.*

Appropriate techniques are available for the separate estimation of the effect of these four factors and standard deviations could be computed corresponding to each of them. However, the limited number of operators and instruments prevent the computation of standard deviations as reliably for factors (3) and (4), as for factors (1) and (2). The time and work involved certainly impose limits on any efforts to do so.

The exclusion of factors relating to instruments and operators is one of the main causes for the unreasonable differences usually encountered in interlaboratory, or round-robin types of tests [4]. Because instruments vary from time to time and operators change, the result from a laboratory at a given time represents only one of the many results that could be obtained, and the variability caused by these two sources must be considered as part of the precision of the laboratory. The standard deviation computed without regard to these effects would underestimate the precision.

If by the proper use of standards and reference methods [2], these two sources of errors were eliminated, the standard deviation computed from the 16 averages of sets of 4 measurements would be the proper measure of precision. Presumably the grand average of the 16 values would be reported.

The average of many values is more stable than individual measurements, and the relationship between the standard deviation of individual measurements and the average of n such measurements can be expressed as:

$$\sigma^2(\bar{X}_n) = \frac{\sigma^2(X)}{n}$$

in other words, the standard deviation of the average is smaller than standard deviation of individual measurements by a factor of $\frac{1}{\sqrt{n}}$. One important provision must hold for this relationship to be true, i.e., that the n measurements are independent of each other. "Independence" can be defined in a probability sense, but for this paper, measurements may be called independent if they show no trend or pattern. This is certainly not true in figure 2, and to say that the standard deviation of the average of all 64 values is 1/8 of the standard deviation of an individual measurement would grossly overestimate the precision. Moreover, this relationship is exact only if the true value of standard deviation, symbol σ, is known. As the computed standard deviation, symbol S, is itself an estimate of σ from the set of measured values, the relationship is only approximately true.

The use of the standard deviation computed from daily averages rather than individual values is preferred because a component of variability between days, or over time, is usually present in precision measurement.

The basic information available on the measurement errors are:
(1) The number of independent determinations or the number from which an average was computed and reported;
(2) An estimate of the standard deviation, S.

From (1) and (2) several useful, derived statistics can be computed:
(3) Standard deviation of the mean of n measurements, $S(\bar{X}_n) = \frac{S}{\sqrt{n}}$. This is sometimes called standard error of the mean to differentiate from the standard deviation of individual determinations. Note: as n becomes large, the value of $S(\bar{X}_n)$ becomes very small, showing that the average of large numbers of measurements approaches a constant value "m" which is usually the objective of the measurement procedure.

(4) Confidence interval for the mean. Each time n measurements are made, a value of the average of the measurements is reported. These averages will differ from time to time within certain limits. One interval of the type $\bar{X} \pm \delta$ can be constructed such that the interval between $\bar{X} - \delta$ to $\bar{X} + \delta$ will be fairly certain to include the value of m desired. The interval is computed by:

$$\delta = t \frac{S}{\sqrt{n}}$$

where "t" is a tabular value of Student's statistic depending on two parameters $(n-1)$ and $(1-\alpha)$. The probability level, $(1-\alpha)$, is similar to "γ" used in tolerance limits, and is usually set at 0.95 or 0.99 and commonly referred to as 95 percent or 99 percent confidence level. The statement may read: "The interval $\bar{X} - \delta$ to $\bar{X} + \delta$ is the 95 percent confidence interval for the mean based on n determinations," or "The half-width of the 95 percent confidence interval for the mean is δ, based on n determinations" [1].

The confidence interval for the mean is concerned only with the probability of including the mean and not of including a specified proportion of population as was the case of the statistical tolerance interval. With n large, the confidence interval tends toward zero, whereas the tolerance interval approaches some constant width, as previously explained.

(5) 2-sigma (or 2s), 3-sigma (or 3s) limits. These limits are similar to the tolerance interval in the sense that the interval between these limits will cover a large percentage of the individual measurements that were or might be made. The expected coverage, however, depends critically on the number of measurements used to estimate σ. Hence, if a measurement is made by the user of an SRM having the same precision as that obtained by NBS, his measurements should fall within these limits when σ is well established. Otherwise there is evidence of systematic difference. (For a discussion of two-sigma and three-sigma limits see ASTM Standard E-177-71) [3].

C. Instrument and Operator Errors

Instrument and operator types of errors have not yet been treated. An ideal situation would be to eliminate them from the measurement process, or to use more instruments and more operators and then estimate standard deviations associated with these sources. When neither of the above is feasible or practical, the least that can be done is to use two instruments. If the confidence intervals for the results of the two instruments do not overlap, then there is good evidence of instrument difference. The difference between these two instruments is probably the lower bound of errors caused by the instruments, because adding a third instrument could only make the total range of difference larger, and not smaller.

Using his experience and judgement, an analyst may arrive at reasonable bounds for these types of errors. If the bound is not computed from measurement data, then its validity can not be supported by statistical analysis. In such cases, these bounds are "guesstimates" and the only recourse is to treat them as limits to systematic errors.

The detection of differences and the separation of the total variability into its identifiable components can be facilitated through careful planning and statistical design of the experiment.

D. Differences Among Measurement Methods

Each measurement method purports to measure the desired property of a material, but seldom does a method measure the property directly. In most cases the method actually measures some other property that is related to the property by theory, practice, or tradition, and then converted to the value of the desired property through these relationships. Discrepancies among results of different measurement methods are legend, even for measurements leading to the determination of fundamental physical constants [5]!

In the preparation of an SRM, usually two or more measurement methods are employed for each property measured. If these methods are well established by virtue of past experience, the results yielded by these methods usually agree to within the uncertainty assigned to each method.

In a few cases these differences are so large that the results cannot be reconciled, and these results are then reported separately for each individual method, but not certified. An example of this type of reporting is SRM 1091, Stainless Steel. The nitrogen content was measured by vacuum fusion and pressure bomb-distillation, and gave results of 861 and 945 ppm, with standard deviations of 3 and 20 ppm, respectively. A report of the average of the two methods would be highly misleading.

Clearly one or both methods have a systematic error that is large compared to the variability of material or the measurement uncertainty. By definition the nitrogen content in the sample of steel is a constant, and the difference between the value obtained (including its own measurement uncertainty) and the true nitrogen content is a measure of the inaccuracy of the method.

Accuracy in its absolute sense is a luxury that we can hardly afford. In practice, inaccuracy of some standards is defined by using a reference method so that at least the same benchmark will be used by every one in the field. Primary Standard Reference Materials are intended for such purposes. The importance of reference methods to supplement the use of these standards is also being emphasized [2].

E. Uncertainties of Certified Values

The term "uncertainty," while indicating the likely inaccuracy of a reported value, does not seem to give such a rigid connotation as that of "accuracy." The uncertainty of an SRM value is usually made up of three components, some supported by data and some not:

(1) A tolerance limit giving bounds to material inhomogeneity based on data and statistical computations.
(2) A confidence limit for the mean giving bounds to measurement error based on data and statistical computations.
(3) A combination (addition of absolute values or the square root of the sum of the squares) of estimated bounds to "known" sources of possible systematic error based on experience and judgement (in other words, there is no data, or not enough data, to make a statistical calculation).

The word "known" is quoted above to contrast with systematic errors that are "unknown" or unsuspected. These unsuspected errors could occur in a number of ways—a component in the physical system, a minor flaw in the theoretical consideration, or the rounding error in a computation. As more uniform material becomes available, and more precise measurement methods are developed, these types of errors will be detected by design or by chance and hopefully will be eliminated. Improved accuracy in the measurement of a property is basically an expensive iterative process and unwarranted demand for accuracy could mean the waste of resources.

F. Statements of Uncertainty on SRM Certificates

A variety of statements of uncertainty can be found in past and current Certificates issued for SRM's. Some of these statements are well formulated and supported by data, others are not; some of these statements contain a wealth of information that is useful to exacting users, but overwhelming to others; some statements are oversimplified with a resulting loss of information. Because the originator of an SRM has to keep all classes of users in mind, the use of a single form of statement is not usually possible. The intention is that all these statements are unambiguous, meaningful, and contain all the information that is relevant for potential users. In practice, however, it is difficult to impose these requirements on all of the more than 850 items now listed in the SRM Catalog.

Some of the commonly used statements are listed below:

EXAMPLE 1: Uncertainty expressed in significant digits.

AISI 4340 Steel (SRM 1261)

Element	Percent, by weight
Carbon	0.38_2
Manganese	0.66

According to the explanation given in the text: "The value listed is not expected to deviate from the true value by more than ± 1 in the last significant figure reported; for a subscript figure, the deviation is not expected to be more than ± 5." Thus, the carbon percent by weight is between 0.377 and 0.387; and that for manganese is between 0.65 and 0.67. These uncertainties include material inhomogeneity, measurement errors, and possible bias between laboratories, because these values are ". . . the present best estimate of the true value based on the results of the cooperative analytical program."

When twenty to thirty elements are to be certified for one sample, this method gives a concise and convenient summary of the results. As these limits are expressed in units of 5 and 10, some information is unavoidably lost for some of the elements. However, it is important to use all of the digits given including the subscripts.

EXAMPLE 2: Standard deviation of a single determination.

Fe-3Si Alloy Microprobe Standard (SRM 483)
Silicon 3.22 ± 0.02 weight percent

The value "± 0.02" is explained as "Standard deviation of a single determination based on results obtained on SRM's 483 and 125b, but also including similar method error estimations from previous determination" [6].

A tolerance-interval type of uncertainty statement, e.g., 3s = 0.06, might have been more meaningful, because it would include both method imprecision and material inhomogeneity.

EXAMPLE 3: 95 percent confidence limits for the mean.

Rubidium chloride (SRM 984)
Absolute abundance ratio . . . 2.593 ± 0.002

"The indicated uncertainties are overall limits of error based on 95 percent confidence limits for the mean and allowances for the effects of known sources of possible systematic error."

Because the isotopic ratio is a constant and is not subject to errors of material inhomogeneity, the

95 percent confidence limits for the mean refer to measurement error only. This is computed from,

$$t\frac{S}{\sqrt{n}}, \text{ as previously described.}$$

The effects on known sources of possible systematic error are discussed in detail in, Absolute isotopic abundance ratio and atomic weight of terrestial rubidium [7].

EXAMPLE 4: 95 percent confidence limits for a single determination.

Rubidium chloride (SRM 984)
RbCl, rubidium assay, weight percent . . .
99.90 ± 0.02

"The indicated tolerance is at least as large as the 95 percent confidence level for a single determination."

The 95 percent confidence limits for a single determination are calculated as "tS," using the same expression as that in (3) but without the denominator, $\sqrt{n}$. The expression "tS" is without statistical interpretation and a more meaningful expression is desirable.

EXAMPLE 5: 2-sigma or 3-sigma limits.

Glass Filters for Spectrophotometry (SRM 930a)
Absorbance . . . 0.500 ± 0.0022

"This uncertainty is the sum of the random error of ± 0.1 percent (2SD limit) and of estimated biases which are ± 0.4 percent."

Each glass filter was individually calibrated, and the standard deviation refers to measurement error, including the cleanliness of the surface. As these glass filters will be used time after time, a multiple of the standard deviation is a proper measure of variability. Note: The estimated systematic error is much larger than the measurement error, as usually is the case in measurements of high precision.

EXAMPLE 6: Average, standard deviation, and number of determinations.

Oxygen in Ferrous Metals (ppm by weight)

SRM No.	Material	Vacuum Fusion			Neutron Activation			Inert Gas Fusion		
		$\bar{X}$	s	n	$\bar{X}$	s	n	$\bar{X}$	s	n
1090	Ingot Iron	484	14	216	492	28	6	497	13	12
1091	Stainless Steel (AISI 431)	131	8	286	132	7	6	129	8	11
1092	Vacuum Melted Steel	28	2	105	28	4	5	29	5	20

$\bar{X}$ = mean oxygen value; s = standard deviation of a single determination; n = number of independent determinations.
(Note: The standard deviation includes error due both to the imprecision of the analytical method and to possible heterogeneity of the material analyzed.)

One criticism against this mode of presentation is that the user will have to compute the uncertainty based on his own understanding of the relationships.

References

[1] Natrella, M. G., Experimental Statistics, NBS Handbook Nat. Bur. Stand. (U.S.), HandB. 91, (Aug. 1966).

[2] Cali, J. P., Mandel, J., and Moore, L. J., A Referee Method for the Determination of Calcium in Serum, Nat. Bur. Stand. (U.S.), Spec. Publ. 260-36. 136 pages (May 1972).

[3] Standard Recommended Practice for Use of the Term Precision and Accuracy as Applied to Measurement of a Property of a Material, ASTM designation E177-71, American Society for Testing and Materials, 1916 Race Street, Philadelphia, Pa. 19103.

[4] Ku, H. H., Editor, Precision Measurement and Calibration—Statistical Concepts and Procedures, Nat. Bur. Stand. (U.S.), Spec. Publ. 300, Vol. 1, 346 pages (Feb. 1967).

[5] Eisenhart, C. E., Contribution to Panel Discussion on Adjustment of the Fundamental Constants, Nat. Bur. Stand. (U.S.), Spec. Publ. 343, (1970).

[6] Yakowitz, H., Fiori, C. E., and Michaelis, R. E., Standard Reference Materials: Homogeniety Characterization of Fe-3Si Alloy, Nat. Bur. Stand. (U.S.), Spec. Publ. 260-22, 30 pages (Feb. 1971).

[7] Catanzaro, E. J., Murphy, T. J., Garner, E. L., and Shields, W. R., Absolute Isotopic Abundance Ratio and Atomic Weight of Terrestial Rubidium, J. Res. Nat. Bur. Stand. (U.S.), **73A** (Phys. and Chem.), No. 5, 511-516 (Sept.-Oct. 1969).

IV. SPECIFIC AREAS OF USE FOR SRM's

In today's technologically advanced world, standardization is a must. The application of meaningful measurement is being applied to an ever growing list of properties of materials. Thus, the documented need for additional Standard Reference Materials has grown to unprecedented proportions.

Science and technology are continuously invading and exploring new and more severe environments such as the reaches of space, the depths of the ocean, and travel at supersonic speeds. The requirements for SRM's therefore have become correspondingly more exacting and complex. For example, chemical composition SRM's certified for a half-dozen elements with an uncertainty of a fraction of a percent were adequate for the steel industry in the 1920's. Some 50 years later, certification of up to 40 elements (some close to the one-part-per-million level) is necessary for certain SRM's designed for composition control in evaluating alloys having special metallurgical properties such as strength, ductility, and corrosion resistance.

Significantly, recent specifications covering the chemical composition of materials have been set with reduced allowable tolerances, and this trend seems likely to continue. These specifications are generally designed to ensure that the material will fulfill all of the performance requirements of the material's end-use. An example is the high-temperature alloys used in turbine blades, particularly those in jet engines. Not only is close control necessary for major and minor constituent elements, but also for certain tramp elements such as lead and bismuth that have proved harmful to the performance of these materials. Recently specifications have been written limiting the content of lead to a maximum of 5 parts-per-million and bismuth to a maximum of a half-part-per-million. For applications where material failure could be catastrophic, the close scrutiny of almost every element in the periodic table will soon be necessary. Similar examples can be found for almost all segments of science and industry. The following sections describe the availability of SRM's, sources of methodology, and standardization activities in five selected industries.

A. Metals Industries

Well over half of the currently available SRM's are metals widely used in industrial applications. Although a number have been certified for their physical properties, the great majority of SRM's are certified for chemical composition. The chemical composition SRM's generally are provided in two main forms—chips and solids. The chip SRM's are used in procedures that involve dissolution of the sample before chemical analysis. These SRM's are used as controls or in the validation or development of chemical methods. The solid metal SRM's are used primarily for the calibration and analytical control using optical emission and x-ray spectroscopic methods of analysis.

1. Chip Form Metal SRM's.

These SRM's consist generally of alloys whose nominal compositions have been selected to provide a wide range of analytical values for the various elements that are of vital concern to the chemist and metallurgist. The chips are usually sized between 16- and 40-mesh sieves and are prepared from selected portions of commercial ingots produced to NBS specifications. The Certificates provided with each SRM give the chemical composition determined at NBS and most Certificates also include values obtained by other laboratories that cooperated in the analytical program for certification. NBS issues a Catalog of SRM's that provides the nominal chemical composition for each of these SRM's to serve as a guide to the user in the selection of the appropriate standards to meet his needs. The official document, however, is the Certificate. For illustrative purposes, the Certificate of Analysis for Standard Reference Material 8j, Bessemer Steel (Simulated) 0.1 percent carbon is given as Appendix B. This is the official document that accompanies SRM 8j. Some features of this Certificate are important to note. The first standard was prepared in 1909 and it was called Standard Sample No. 8. Subsequent renewals of this material were numbered 8a, 8b, 8c. . . . 8j. Thus, 8j is the eleventh lot of this type of material. While each of the lots may differ somewhat in detailed analyses, all retain the relatively high level of phosphorus and sulfur and the low alloy metal content characteristic of this type of steel.

While the Bessemer steel making process is little used today (hence "Simulated" appears in the descriptive name), the demand by analysts for this composition provided sufficient justification to warrant its renewal in 1972. NBS and three industrial laboratories cooperated in the analytical program for certification of this standard. Two parts of the Certificate are of most concern to the analyst: first, the values reported by the laboratories and the average or mean of those values, and secondly, a brief synopsis of the methods employed for the determination of the various elements in the cooperating laboratories. This enables the analyst to see immediately the variability among laboratories. Thus the analyst can objectively view the results in the light of the methodology used to obtain them. With respect to methodology, emphasis is made that relative methods are normally not used in the actual certification of a standard. Only reference or umpire methods of demonstrated accuracy are used in the actual analyses. Although many laboratories have developed their own reference or umpire methods of analysis, both NBS and cooperating laboratories rely heavily on Standard Methods developed in interlaboratory (round-robin) compari-

son programs and subsequently published by the American Society for Testing and Materials (ASTM).

When an SRM similar in composition to the unknowns to be analyzed is run as a "control" along with the unknowns, analytical results obtained for the SRM that are divergent from the certified value usually indicate possible methodology problems. The analyst should not apply correction factors to the "unknowns" based on divergent results of the SRM's. Rather, modification and closer control of his method should be undertaken until the results on the SRM control are substantially in agreement with the NBS certified values. Then and only then can the analyst have reasonable assurance that the numbers reported for the "unknowns" are reliable.

The chip form SRM's have been lathe cut with a serrated tool. The lathe cuttings are machine ground, sieved (usually through 16- to 40-mesh sieves) and then thoroughly blended. This provides highly homogeneous lots of material of uniformly sized particles. For many materials, particularly cast irons, the finer sized particles may differ appreciably in composition from larger size particles; consequently, the "fines" (smaller than 40 mesh) and the very coarse (larger than 16 mesh) are discarded. However, in analyzing "unknowns" representative samples must be taken that include the proper proportion of both coarse and fine particles. Sampling and sample preparation techniques are described in detail in the Annual Book of ASTM Standards (currently 1973 edition) [1].

2. *Solid Form Metal SRM's.*

A wide variety of SRM's have been prepared in solid form for calibrating optical emission and x-ray spectroscopic methods of analysis. These methods are extensively used in the metals industry by producers for the production quality control of about 90 percent of their output, and by consumers for acceptance testing of more than 75 percent of their purchases. Basically, spectroscopic methods of analysis are comparative type methods and require SRM's matching the test samples closely in composition, form, and physical condition. To utilize the prime advantages of high speed and high accuracy in the analysis of metals and alloys by these methods, SRM's must be in forms suitable for use without further processing. When the first spectroscopic standards were issued in 1944, the materials were prepared in the form designed for emission spectrographic analysis only. As direct-reading emission spectrometers came into being and with the advent of x-ray fluorescence analysis in the early 1950's, a disk form equally suitable to either method evolved. Since the late 1950's, all of the solid form steel standards made available from NBS have been prepared as disks, usually 32 mm (1 1/4 in) in diameter and 19 mm (3/4 in) thick. In recent years, material from the same melt has been prepared in several forms to serve the needs of most analytical methods.

Spectrometric methods of analysis require a graduated set of SRM's for establishing analytical curves. Previously, most spectroscopists maintained that it was necessary to have a minimum of three standards for each different alloy to be analyzed, and many spectroscopists wanted the standards available in both chill-cast and wrought metallurgical conditions. With the many thousands of different kinds of alloys being produced, standardizing agencies such as NBS soon realized that they could hope to fulfill only the basic needs of industry for these standards. They also recognized that the producer was in a position to prepare his own standards (usually chill-cast materials), but the consumer normally did not have the capability to produce the standards he needed for acceptance testing (usually wrought products). Therefore, NBS concentrated largely on the preparation of wrought-type SRM's.

The solid form metal SRM's available from NBS include various iron and steel compositions and nonferrous base alloys. Despite the variety of compositions of these SRM's and their individual development, the history of the low-alloy steels and associated iron SRM's present an excellent example of the development of solid metal SRM's.

The low alloy steel SRM's are divided into three groups: those prepared in the mid-1940's, those in the mid-1950's (called the "1100" series), and those introduced in 1970 (called the "1200" series). The original low alloy steels were prepared for spectroscopic methods of analysis from the cores that remained after the ingots were lathe cut to produce the chip form SRM's. Those materials that were found to be satisfactory after homogeneity testing were fabricated into the final shapes and sizes. Although entirely satisfactory for conventional spectroscopic methods, these older SRM's generally do not meet the stringent homogeneity requirement needed by the newer microchemical methods. Consequently many of these will be discontinued when the present supply is exhausted.

The "1100" series was prepared in the mid-1950's and consists of eight SRM's "tailored" to provide a useful concentration range for some 25 elements. The planning, preparation, homogeneity testing, and certification of these SRM's were performed through a major cooperative program between industry and NBS. This series was planned to meet the newer, critical requirements for calibration in the iron and steel industry. Material for these SRM's was prepared by the most modern melting, casting, and fabricating techniques then available to provide large quantities of the material of the highest homogeneity. The materials were extensively characterized including investigations by means of electronprobe microanalyzers and quantitative metallographic techniques [2, 3].

First issued in 1957, the "1100" series gained widespread acceptance. The demand for these SRM's proved so great that the supplies of some of

the disk type SRM's were exhausted before their planned replacements were available.

Consequently, a set of five SRM's—the "1200" series—was planned and prepared to replace the "1100" series.

The "1200" series consists of 4 low-alloy steels and an electrolytic iron containing a graded series of 40 elements. Material from the same melt is available in 4 forms: disks, SRM's 1261–1265, 31 mm in diameter and 19 mm thick for optical emission, and x-ray spectrometric methods; chips, SRM's 361–365, for solution chemical methods; rods, SRM's 661–665, 3.2 mm in diameter and 51 mm long for microchemical methods; and rods, SRM's 1095–1099, 6.4 mm in diameter and 102 mm long for determining gases in metals by vacuum or inert-gas fusion techniques or neutron activation methods of analysis.

Extensive planning, preparation, homogeneity testing, and certification were carried out for the "1200" series involving a major cooperative program between industry and NBS. Appendix C shows the present status of the certification of the "1200" series.

NOTE: The more recent Certificates of Analysis for solid spectrochemical SRM's contain the following statement on precision and accuracy.

> "The value listed for a certified element is the *present best estimate* of the "true" value based on the results of the analytical program. The value listed is not expected to deviate from the "true" value by more than ±1 in the last significant figure reported; for a subscript figure the deviation is not expected to be more than ±5. Based on the results of homogeneity testing, maximum variations within and among samples are estimated to be less then the uncertainty figures given above."

An example of the use of this statement is illustrated for SRM 1264. The carbon content in 1264 is certified at 0.87_0 percent. This signifies that the "true" carbon content is expected to be in the range from 0.865 to 0.875 percent. The silicon in 1264 is certified at 0.067 percent. This signifies that the "true" silicon content of the standard is expected to lie within the range of 0.066 to 0.068 percent.

Unless the user has access to and utilizes the proper methodology, SRM's alone are essentially useless. The main reference for methodology is the ASTM Book of Standards, Part 32. All proposed, tentative, and standard methods of analysis for both optical emission and x-ray fluorescence are included. In addition, ASTM Committee E2 on Emission Spectroscopy publishes a compilation that includes not only all of the methods and practices included in Part 32, but also a variety of suggested methods that are based solely on the authors' experiences. This compilation has been invaluable in establishing suitable methods for analysis of a variety of products—not only for new laboratories, but also for well-established laboratories that are confronted with new analytical problems. This compilation is generally published every four years.

Numerous other books and periodicals exist that contain both chemical and spectrochemical methods of analysis. Most of these are referenced in *Chemical Abstracts* published by the American Chemical Society.

Where differences arise and agreement must be reached between producer and consumer, the use of ASTM methods together with suitable SRM's is recommended and extremely useful. These ASTM methods have been tested and proven in extensive interlaboratory comparison programs. Often these programs will specify the use of standards, such as SRM's, together with unknowns analyzed by ASTM chemical procedures. The general agreement that is reached on these unknowns by the volunteering laboratories attest to both the precision and to the accuracy of the methods under test.

Neither the National Bureau of Standards nor any other national laboratory can hope to provide all the SRM's needed. Consequently, users should know the commercial sources of standards [4] or be prepared to make their own standards.

3. *Gases in Metals.*

A variety of SRM's, both ferrous and nonferrous, are available for the determination of gases in metals, particularly oxygen and nitrogen, but also including hydrogen, for titanium-base alloys. These SRM's are for application in the vacuum fusion method for the determination of gases in metals. The nitrogen content, however, can be determined by chemical and Kjeldahl techniques, while more recently neutron activation has been used rather extensively in the determination of oxygen in metals. In addition, inert gas fusion techniques may be used to determine oxygen, nitrogen, and hydrogen in metals.

4. *High-Purity Materials.*

Several high-purity metal SRM's have been made to meet the needs of analysts determining impurity elements in metals. They are intended to serve as benchmarks in testing methods and equipment. They are also expected to be valuable in developing new or improved methods or techniques that extend the sensitivity of detection in the determination of trace constituents in various materials. On the Certificate of Analysis for high-purity SRM's the state-of-the-art information on the chemical composition is supplied. The Certificates are revised whenever significant, new information is generated.

SRM's certified for their physical properties play a vital role in servicing the National Measurement System [5]. They serve as the transfer mechanism for physical property measurements between national standardizing laboratories and industrial, university, and government laboratories.

A number of metal SRM's certified for their physical properties have been made available and considerable information regarding these may be found in the SRM Catalog [6]. Included are SRM's certified for physical properties such as thermal con-

ductivity, thermal expansion, magnetic susceptibility, thermal emittance, and specular reflectance.

Specific details regarding the certification measurements and the use of these SRM's are stated on the Certificate that accompanies each SRM. Most Certificates provide literature references to additional information that may be of value to the user. For several of these SRM's, an NBS Special Publication in the "260 Series" has been written and is available.

References

[1] ASTM Designation E30-73: Standard Methods for Chemical Analyses of Steel, Cast Iron, Open-Hearth Iron, and Wrought Iron, 1973 Annual Book of ASTM Standards, Part 32, American Society for Testing and Materials, Philadelphia, Pennsylvania (1973).

[2] Standard Reference Materials: Metallographic Characterization of an NBS Spectrometric Low-Alloy Steel Standard, Nat. Bur. Stand. (U.S.), Misc. Publ. 260-3 (October 1964).

[3] Standard Reference Materials: Homogeneity Characterization of NBS Spectrometric Standards II: Cartridge Brass and Low-Alloy Steel. Nat. Bur. Stand. (U.S.), Misc. Publ. 260-10 (Dec. 1965).

[4] Report on Avaliable Standard Samples, and High-Purity Materials for Spectrochemical Analysis 1963, ASTM Spec. Tech. Publ. No. 58-E. American Society for Testing and Materials, Philadelphia, Pennsylvania (1963).

[5] Huntoon, R. D., Concept of a National measurement system, Science **158**, No. 3797, pp 67-71 (October 6. 1967).

[6] Standard Reference Materials: 1973 Catalog, Nat. Bur. Stand. (U.S.), Spec. Publ. 260, 1973 ed. 96 pages (April 1973).

B. Rubber Industry

Crude rubber, be it natural or synthetic, is a highly variable material. There is considerable art in the manufacture of uniform, salable consumer products from these crude materials.

Prior to World War II, the rubber products used in the United States were made from natural rubber. As World War II approached it became evident that the supply of natural rubber would be endangered. Research and development was begun on a number of synthetic materials to assure the supply of this critical commodity. By 1943, a number of synthetic rubber plants were in operation.

In order to guarantee the uniformity of products from the various plants, the U.S. Government took steps almost immediately to establish a standardization program. The history of these developments and the problems related to the establishment of a rubber SRM program have been described by Roth and Stiehler [1].

The principal source of Standard Reference Materials for the rubber industry is the National Bureau of Standards. In the selection of rubbers and rubber-compounding materials to be issued as SRM's, the National Bureau of Standards depends on the advice and recommendations of the ASTM Sub-Committee D11.20 on Compounding Materials and Procedures. The present NBS-SRM program is based on the following five rubbers:

SRM	Type
385	Natural rubber
386	Styrene-butadiene type 1500 rubber (SBR 1500)
388	Butyl rubber
389	Styrene-butadiene type 1503 rubber (SBR 1503)
391	Acrylonitrile-butadiene rubber

Each of these rubber SRM's are characterized for homogeneity and comparability to the preceding lots. The specific rubber is blended with the appropriate SRM rubber-compounding ingredient and vulcanized according to the most current revision of ASTM Method D15 [2]. The vulcanized rubbers are then measured for Mooney viscosity, stress at a given elongation and at failure, and strain under a given load. All except the natural rubber (SRM 385) are measured for electrical conductivity [3]. Each rubber SRM is issued with a Certificate.

Rubber-compounding SRM's are not issued with Certificates. Consequently each renewal of a rubber-compounding material must be as similar as possible to its predecessor. At present, the state-of-the-art in rubber chemistry is such that numerical values cannot be assigned to the properties of interest. Indeed, at this time, it is not even certain what the specific properties are that affect the various properties of rubbers. Therefore, every effort is made to supply renewals that are chemically similar to their predecessor, but more importantly, the properties they impart to the vulcanizate must be similar to those imparted by their predecessors. The rubber-compounding SRM's currently available are:

SRM	Type
370	Zinc oxide
371	Sulfur
372	Stearic acid
373	Benzothiazyl disulfide (MBTS)
374	Tetramethylthiuram disulfide (TMTD)
376	Light magnesia
377	Phenyl-B-naphthylamine
378	Oil-furnace black (HAF)
379	Conducting black
380	Calcium carbonate
381	Calcium silicate
382	Gas-furnace black (SRF)
383	Mercaptobenzothiazole
384	*N*-tertiary-Butyl-2-Benzothiazolesulfenamide

When these materials are renewed, they are evaluated in the same manner as the rubber SRM's. This is done by making two recipes, one with the intended renewal and the other with the material to be replaced. The new lot is accepted as the renewal only after a consistency is established between the various rubbers and rubber-compounding materials that is independent of the renewal lot.

Huge amounts of carbon black are used in the formulation of rubber; therefore, a secondary standard supply known as "Industrial Reference Blacks" has been established by ASTM Committee D-11 (Rubber) and D-24 (Carbon Black). The present material is "Industrial Reference Black No. 4" and is available from any sales office of the Geoffrey Cabot Corporation.

Because of the importance of the changes in properties of rubbers upon immersion in oils, a series of ASTM Reference Oils has been developed. These are designated as "ASTM Reference Oils No. 1, No. 2, and No. 3" and are described in ASTM Method D47 [2]. Oil No. 1 is no longer available, and a replacement is being sought. Oils No. 2 and No. 3 are available from the Sun Oil Co., Philadelphia, Pa.

The rubber industry in the United States has been most active in the International Standards Organization Committee ISO/TC 45 on Rubber. Consequently, many of the ISO methods strongly resemble those of ASTM. The ASTM methods for both rubber and carbon blacks are described in Part 28 of the Annual Book of ASTM Standards [2]. These standard procedures are developed and are continually revised by ASTM Committee D-11 on Rubber and D-24 on Carbon Black.

References

[1] Roth, F. L., and Stiehler, R. D., Standard Materials for Rubber Compounding, Proc. Intern. Rubber Conf. No. 8-13, 1959, p 232, American Chemical Society, Washington, D.C., 1959.

[2] Annual Book of ASTM Standards, Part 28, Rubber, Carbon Black, Gaskets, American Society for Testing and Materials, Philadelphia, Pa., 1972.

[3] McKinney, J. E., and Roth, F. L., Carbon black differentiation by electrical resistance of vulcanizates, Ind. Eng. Chem. **44**, 159 (1952).

C. The Nuclear Measurement System

In the area of nuclear measurement, as in most other areas where the measurements to be made are chemical (analytical) in nature, the primary chemical SRM's issued by NBS are applicable. These primary chemical SRM's conform to the IUPAC definition of primary chemicals in that they are at least 99.98 percent pure substances. These NBS-SRM's can be used to calibrate typical chemical systems such as acid-base reactions and oxidation-reduction reactions. They are listed in Appendix D.

In addition to the chemicals usually thought of as primary standards, NBS issues three other materials that have primary applicability in the area of nuclear materials for the analysis of chemical composition and also a variety of other SRM's either directly or indirectly related to nuclear measurement systems. These SRM's were developed over a long period of time in conjunction with the U.S. Atomic Energy Commission (AEC) and are listed in Appendix E.

The uranium oxide chemical assay Standard, SRM 950a, was developed as an outgrowth of the NBS position as a referee laboratory in the 1950-1960 period. A complete description of the development and a discussion of the stoichiometry problems and their resolution is included in Analysis of Uranium Concentrate at the National Bureau of Standards [1], and Analytical Mass Spectrometry Section: Summary of activities, July 1969 to June 1970 [2].

The plutonium metal standard, SRM 949 (now SRM 949d), has been issued by the National Bureau of Standards since 1962. This high-purity chemical SRM was prepared and issued in cooperation with the AEC and is intended as an assay standard for the analysis of plutonium and plutonium based fuels. This particular SRM is one of the primary standards used by fuel processors, fabricators, users, and regulating agencies.

While the use of the plutonium metal SRM is quite broad, the packaging, preparation, and analytical details present problems of maintaining adequate supplies of this SRM. To remedy these problems, the preparation of a plutonium chemical compound for assay purposes was undertaken in 1967. A variety of plutonium compounds was investigated for stability and stoichiometry as possible "candidate SRM's." A report on the stoichiometry and stability of plutonium sulfate tetrahydrate by C. Pietri was published in 1968 [3]. As a result of this report and other work at NBS and the AEC's New Brunswick Laboratories, a chemical assay standard of plutonium sulfate tetrahydrate was prepared and is now issued as SRM 944 by NBS as an alternate SRM for the plutonium metal SRM, 949d. While the former SRM does not duplicate the matrix effect of the latter SRM, it is more readily available, more convenient to use, and is suitable for most analytical work.

In addition to the uranium and plutonium chemical compounds, NBS issues a series of Uranium oxide isotopic SRM's and three plutonium isotopic SRM's as described in Appendix E. These SRM's are intended to be used as calibration standards in making mass spectrometric measurements. The details of preparation and analysis of these materials are found in NBS Special Publication 260-27, Uranium Isotopic Standard Reference Materials [4] and in NBS Technical Note 546, p. 24 [2].

A variety of other isotopic SRM's available from NBS relates to the measurement of the age-dating isotopes of strontium and lead and are listed in Appendix F. One of these, SRM 988, is a precisely measured solution of pure strontium-84 to be used as a spike solution to make isotope dilution age-dating measurements. Another SRM-987, Strontium Carbonate-is a contemporary rock and chemical assay standard. In addition to the strontium dating SRM's, three lead isotopic SRM's are issued for the calibration of mass spectrometers making lead dating measurements.

Besides the NBS role in the standardization of nuclear measurements, other laboratories, especially those within the AEC. issue standards relating to this same activity. The New Brunswick Laboratory for example issues several series of standards: Uranium bearing ore standards; pitchblende; and monazite counting standards; UF_4, UO_3, Th metal, Be metal, and UO_2 issued for chemical assay and/or impurities; and three graded series, ThO_2, U_3O_8, and BeO, certified for a variety of trace elements.

The AEC's Oak Ridge National Laboratory (ORNL) issues a series of stable isotopic materials with nominal isotopic compositions that vary from those usually found in nature. In the past these were listed in the ORNL isotopes catalog; however, they are now listed in Radio Isotopes, Stable Isotope Research Materials [5].

The number of nuclear materials issued by foreign nations is somewhat limited. However, NBS distributes fissile nuclear material to the International Atomic Energy Agency (IAEA) member countries, through IAEA; and to countries that have entered into an AEC agreement on the use of fissile material.

Measurement methodology for nuclear material is available from several sources. As this particular discipline is relatively new, most laboratories have developed their own analytical handbooks to deal with the analytical problems that they face. The Los Alamos Scientific Laboratory (LASL), Argonne National Laboratory (ANL), and others have written their own procedures outlining in detail the analytical methods used. A valuable source of specific information in the general analysis of these materials is Analysis of Essential Nuclear Reactor Materials [6].

The basic reference methods have been or will be incorporated into the Book of ASTM Standards. These now appear in the 1973 Book of ASTM Standards, Part 32; but after 1974, they will appear in a new, separate volume, Part 45. In addition, most methods approved by ASTM are incorporated without change as standard methods by American National Standards Institute (ANSI).

Although other sources of standard methods or reference methods are somewhat limited, most specific methods and essentially all of the general methodology have been published in scientific journals. Periodic reviews of the appropriate journals provide a convenient means of staying abreast of current analytical procedures.

References

[1] Anaylsis of Uranium Concentrate at the National Bureau of Standards, Nat. Bur. Stand. (U.S.) Misc. Publ. 260-8, 96 pages (Dec. 1965).

[2] Analytical Mass Spectrometry Section: Summary of Activities July 1969 to June 1970, NBS Tech. Note 546, pp. 23-24 (1970).

[3] Pietri, C., The Stability of Plutonium Sulfate Tetrahydrate, and Analytical Standard: A Ten-Year Evaluation, Talanta, **18**, 849-852 (1971).

[4] Uranium Isotopic Standard Reference Materials, Nat. Bur. Stand. (U.S.), Spec. Publ. 260-27, 40 pages (Feb. 1971).

[5] Radio Isotopes, Stable Isotope Research Materials, available from the Isotope Development Center, Oak Ridge National Laboratory, P.O. Box X, Oak Ridge, Tennessee.

[6] Rodden, C. J., Analysis of Essential Nuclear Reactor Materials, C. J. Rodden, ed., 1-157, U.S. Atomic Energy Commission, Superintendent of Documents, U.S. Government Printing Office, Washington, D.C. 20402 (1964).

D. Inorganic Standards

The Standard Reference Materials described in this section are economically important either in themselves or in the preparation of some product. For the most part, these are naturally occuring materials; consequently, they contain a wide range of minor and trace constituents. Depending upon the end use of the material, these constituents may enhance or detract from the economic value or technological use of a material. Therefore, producers must carefully select the material that has the best balance between desirable and undesirable constituents. To aid industry in this selection process, NBS has issued a variety of SRM's certified for chemical composition, including such materials as ores, cements, fertilizers, minerals, refractories, and glasses.

The standardization efforts of NBS for inorganic materials have been directed toward the accurate determination of those constituents that are essential to the users, but not necessarily toward the total characterization of the material.

Two fluorspars, SRM's 79a and 180, illustrate these efforts. Although both SRM's are certified for calcium fluoride content only, they are certified for different purposes. SRM 180, a higher purity fluorspar, is issued primarily for use by geochemists, while SRM 79a is issued as an assay standard for the U.S. Bureau of Customs and fluorspar importers. SRM 79a is certified at 97.39 wt % CaF_2 primarily for use by the Bureau of Customs to determine the duty to be assessed on imported fluorspar, which is based on the CaF_2 content. For acid-grade fluorspar (containing at least 97% CaF_2), the duty charged per ton is less than the duty charged for metallurgical-grade fluorspar (containing less than 97% CaF_2). In 1972 the duty for fluorspar was $2.10 per long ton for the acid grade and $8.40 per long ton for the metallurgical grade. In that year, the total fluorspar consumption in the U.S. was 1,276,329 long tons, of which 1,181,530 long tons were imported and for which duty was paid. Thus, the economic importance of such an SRM is easily seen.

While the fluorspar SRM's illustrate the importance of the major constituent of a material, many glasses require minor constituent measurement and certification. Glasses generally consist of a mixture of the oxides of silicon, barium, calcium, sodium, and potassium. The physical properties of the finished glass depend on the quantities of these

oxides, the presence and quantities of other metal oxides, and the preparation techniques used (heating rate, annealing procedures, etc.). For example, a low-expansion, heat-resistant glass (borosilicate) usually contains a significant amount of B_2O_3, and its amount must be accurately controlled by the producer.

To aid in the analysis of such glasses, NBS issues two SRM's certified for B_2O_3 content: SRM 92, Low-Boron glass (0.70 wt. % B_2O_3) and SRM 93a, High-Boron glass (12.6 wt. % B_2O_3).

Currently NBS issues 14 ores, 8 cements, 3 fertilizers, 9 minerals, 7 refractories, and 6 glasses certified for chemical composition. Seven of the eight cements are new SRM's issued since the 1973 Catalog. The analyses of the cements are given in Appendix G. Besides these SRM's a special glass was prepared and doped with 61 trace elements to form (nominal) concentration levels at 500, 50, 1, and 0.02 ppm. These SRM's, called Trace Elements in Glass, were developed for use in calibrating instruments and in checking analytical techniques and procedures employed in the determination of trace elements in glass and glass-like inorganic matrices (e.g., ores, ceramics).

NBS also issues ten glass SRM's certified for viscosity, relative stress optical coefficient, softening point, annealing point, and strain point.

In addition to the standards available from NBS a variety of similar standards are available from other sources including:

Geological Survey of Canada
Department of Energy, Mines, and Resources
555 Booth Street
Ottawa 4, Ontario

Bureau of Analysed Samples, Ltd.
Newham Hall
Middlebrough, Yorkshire, England

Office National des Measurements
Budapest XII Hungary

The Iron and Steel Institute of Japan
No. 5 Otemachi 1-chome
Chiyoda-Ku-Tokyo 100
Japan

Schweizerische Arbeitsgemeinschaft
fuer Stein und Erden
Mineralogisch-petrographische Institut
Sahlistrasse 6
Bern, Switzerland

The American Society for Testing and Materials, 1916 Race Street, Philadelphia, Pennsylvania, 19013, is currently revising its DS 2 Publication: Report on Available Standard Samples, Reference Samples, and High-Purity Materials for Spectrochemical Analysis (1963). This publication provides a ready reference for sources and availability of standards, reference samples, and high-purity materials.

Methods of analysis, specifications or research information related to several inorganic SRM's are given below. Standardization activities for most of these materials are under the sponsorship of the American Society for Testing and Materials through one of its committees: C-1 on Cements, C-8 on Refractories, C-14 on Glass and Glass Products, and E-16 on Sampling and Analysis of Metal Bearing Ores and Related Materials. Additional standardization activities for cements are conducted by the Portland Cement Association.

Sources of Information

Glasses:

1. Napolitano, A., and Hawkins, E. G., Viscosity of a Standard Soda-Lime-Silica Glass, J. Res. NBS **68A** (Phy. and Chem.), No. 5, 439–448 (Sep–Oct 1964).
2. Napolitano, A., and Hawkins, E. G., Viscosity of a Standard Borosilicate Glass, NBS Spec. Publ. 260–23 (1970).
3. Napolitano, A., and Hawkins, E. G., Viscosity of a Standard Lead-Silica Glass, NBS Misc. Publ. 260–11 (1966).
4. Annual Book of ASTM Standards, Part 13 (1973), Chemical Analysis of Glass Sand, ASTM Designation C 146–66; Chemical Analysis of Soda-Lime Glass, ASTM Designation C169–69; Test for Annealing Point and Strain Point of Glass, ASTM Designation C 336–69; Test for Softening Point of Glass, ASTM Designation C 338–57.
5. Gills, T. E., Thompson, B. A., and Masters, L. W., Determination of Trace Elements in Glass by Activation Analysis Using Hydrated Antimony Pentoxide for Sodium Removal, Anal. Chem. **42**, No. 14 (1970).
6. Maienthal, E. J., Determination of Trace Elements in Silicate Matrices by Differential Cathode Ray Polarography, Anal. Chem. **45**, No. 4 (1973).
7. Barnes, J. L., Garner, E. L., Gramlich, J. W., Moore, L. J., Murphy T. J., Machlan, L. A., Shields, W. R., Tatsumoto, M., and Knight, R. J., Determination of Lead, Uranium, Thorium and Thallium in Silicate Glass Standard Materials by Isotope Dilution Mass Spectrometry, Anal. Chem. **45**, No. 6 (1973).

Ores:

8. Annual Book of ASTM Standards, Part 32 (1973), Test for Silica in Iron Ores and Manganese Ores, ASTM Designation E 247–71; Test for Manganese in Manganese Ore by the Pyrophosphate (Potentiometric) Method, ASTM Designation E 248–68; Test for Total Iron in Iron Ores by Stannous Chloride Reduction and Dichromate Titration, ASTM Designation E 278–71; Test for Manganese in Iron Ores, ASTM Designation E 314–71; Test for Iron in Manganese Ores, ASTM Designation E 316–71; and Chromium Oxide in Chrome Ores, ASTM Designation E 342–71.

Minerals:

9. Shultz, J. I., Bell, R. R., Rains T. C., and Menis, O. Methods of Analysis of NBS Clay Standards, NBS Spec. Publ. 260–37 (1972).
10. Annual Book of ASTM Standards, Part 13 (1973), Chemical Analyses of Chrome Containing Refractories and Chrome Ores, ASTM Designation C 572–70; Chemical Analysis of Fire Clay and High-Alumina Refractories, ASTM Designation C 573–70; Chemical Analysis of Magnesite and Dolomite Refractories, ASTM Designation C 574–70; and Chemical Analysis of Silica Refractories, ASTM Designation C 575–70.

Cements:

11. Annual Book of ASTM Standards, Part 9 (1973), Standard Specification for Portland Cement, ASTM Designation C 150–70;

Test for Fineness of Portland Cement by Air Permeability Apparatus, ASTM Designation C 204–68; and Test for Fineness of Portland Cement by Turbidimeter, ASTM Designation C 115–70.

E. The Clinical Measurement System

The practice of medicine is still fundamentally an art in terms of measurement science, primarily because of the extreme complexity of physiological systems. Consequently, a physician still depends to a large extent on his ability to build up a lore, and to use that lore to diagnose and treat various maladies. During the past 100 years, a number of scientific disciplines have come into being in the practice of medicine. These include: radiology, histology, microbiology, hematology, clinical chemistry, and others. This section is devoted almost entirely to clinical chemistry.

The functioning of the human body, and indeed any biological system, depends upon the coordinated operation of almost countless chemical subsystems. Because people are different, the parameters defining these systems vary considerably among healthy people [1], but show marked deviations in the case of many illnesses. In principle, by keeping records of levels of various chemical and biochemical constituents in the various body fluids, cells, and tissues, the onset of illness could be predicted before physical symptoms are apparent.

The accuracy, and sometimes even the precision, of the data generated by clinical chemistry laboratories is in need of improvement. Many practicing physicians use clinical chemistry data to support diagnoses based on other medical or physiological symptoms. Further, because of the lack of precision and accuracy in these data, the physician using such data usually applies a large safety factor. Thus, normal ranges for various chemical constituents have been developed based on large populations. This situation cannot noticeably change until the accuracy and precision of clinical chemistry data are greatly improved.

Many problems associated with the imprecision and inaccuracy of today's clinical chemistry data may be attributed to four sources:

(1) The lack of high-quality reference standards.
(2) The lack of well-designed and critically evaluated test methods.
(3) The rapid turnover and/or lack of motivation among many of the people actually making the measurements.
(4) The change in the specimen from the time it is removed from the body until the actual measurement of the desired parameter is begun.

Only SRM's and reference methods (1 and 2, above) will be considered in this section.

Clinical chemistry is basically no different from any other type of analytical chemistry. It depends upon acid-base reactions, oxidation-reduction reactions, the weighing of a precipitate, the evaluation of a color, etc. For such reactions, several groups of SRM's are available from NBS.

These SRM's designed for acid-base and oxidation-reduction reactions are usually high-purity chemicals, which are evaluated in terms of the desired reaction. These "primary chemicals" are listed in Appendix D.

The use of these "primary" chemical SRM's permit the achievement of the most accurate data presently possible in the areas of acid-base and redox titrimetry. However, these SRM's are not an end in themselves. Samples of these SRM's must be accurately weighed; they must be dissolved into solution using clean glassware calibrated according to NBS instructions [2]; consideration must be given to the temperature, i.e., the solution must be allowed to reach equilibrium at room or other specified temperature before diluting to the volumetric mark; the quality of the distilled water must be frequently evaluated; and, consideration must be given to the environment in which the measurements take place. An excellent example of high-accuracy oxidation-reduction titrimetry has recently been published [3].

1. Spectrophotometry.

One of the more frequently used techniques in the clinical chemistry laboratory is spectrophotometry. The importance of this technique is enchanced because it is often used to obtain the final number from which the required data is calculated. Spectrophotometers tend to fall under the general heading of "semiautomatic" and as such their maintenance and calibration are frequently neglected or overlooked [4].

Accurate spectrophotometry depends principally on five parameters: the stability of the light source; the performance of the monochromator and accurate knowledge of the wavelength of the light as it passes through the sample; the pathlength through the sample; the reduction of stray light to a minimum; and. the performance of the detector (photometer).

The stability of the light source is more or less an inherent feature of the construction of the instrument. A certain amount of instability can be overcome by the use of double-beam instruments. The control of this parameter does not lend itself to the use of SRM's.

The performance of the monochromator is also a structural feature of the instrument. However, the wavelength accuracy must be determined periodically at several points. The knowledge of the accuracy of one wavelength does not guarantee a corresponding accuracy or lack of bias at another wavelength. The mercury emission spectrum offers a number of accurately known wavelengths, table 1 [5], and is the method of choice in those cases where

it can be adapted to the spectrophotometer. In cases where the use of the mercury lamp is not convenient, the absorption spectra of holmium oxide and didymium glass [6] provide a useful alternative, table 2.

TABLE 1. *Mercury reference wavelengths useful for spectrophotometer wavelength calibration*

Wavelength (nm)	Wavelength (nm)
1. 253.65	7. 404.66
2. 269.73	8. 407.78
3. 302.15	9. 435.84
4. 313.16	10. 546.07
5. 334.15	11. 576.96
6. 365.01	12. 579.07

Almost invariably, clinical spectrophotometry measurements are made on liquids. The liquids are contained in rectangular-parallel pipedal cuvettes, and the pathlength of the beam through the liquid to be measured is defined by the dimensions of this cuvette. Cuvettes are available from many commercial sources, but the quality varies widely.

TABLE 2. *Characteristic wavelengths of didymium and holmium glasses*

	nm	±	nm
Holmium	241.5		0.20
Holmium	279.4		.30
Holmium	287.5		.35
Holmium	333.7		.55
Holmium	360.9		.75
Holmium	418.4		1.10
Holmium	453.2		1.40
Holmium	536.2		2.30
Didymium	573.0		3.00
Didymium	586.0		3.00
Holmium	637.5		3.80
Didymium	685.0		4.50

A standard reference cuvette (SRM 932) is available from NBS. SRM 932 is an all-quartz cuvette provided with two optically transparent and parallel windows (the Certificate for SRM 932 is Appendix H [7]).

Stray light is light of other than the desired wavelength passing through or around the sample at the time of measurement. Stray light may be estimated by setting the instrument at 100 percent transmittance, inserting a sharp cutoff filter, and measuring the photometer reading. Any indicated transmittance may be attributed to stray light. There are no Standard Reference Materials for stray light, although such work has been proposed.

The photometric response of the spectrophotometer is the measurement upon which the calculation of the desired result is based. Consequently, much effort has been expended to develop standards in this regard for the accurate calibration of spectrophotometers. For many years NBS has offered a series of glass filters identified as SRM 2101–2105, Color Standards for Spectrophotometer-Tristimulus Integrator Systems [8]. Since a small error in the determination of the wavelength will result in a gross error in the transmittance, the use of a more neutral filter for this purpose is highly desirable; that is, a filter whose transmittance shows relatively small variations with wavelength. Such filters are issued as SRM 930a, Glass Filters for Spectrophotometry (see Appendix I).

While glass filters provide a highly accurate means of calibrating the photometric components of a spectrophotometer, in many cases the use of such filters is either inconvenient or nearly impossible. To alleviate this problem, NBS developed SRM 931, Liquid Absorbance Standards for Ultraviolet and Visible Spectrophotometry (see Appendix J). The filters in SRM 931 were prepared by dissolving high-purity cobalt and nickel in a mixture of nitric and perchloric acids. The absorption spectra of the resulting solution is shown in figure 1.

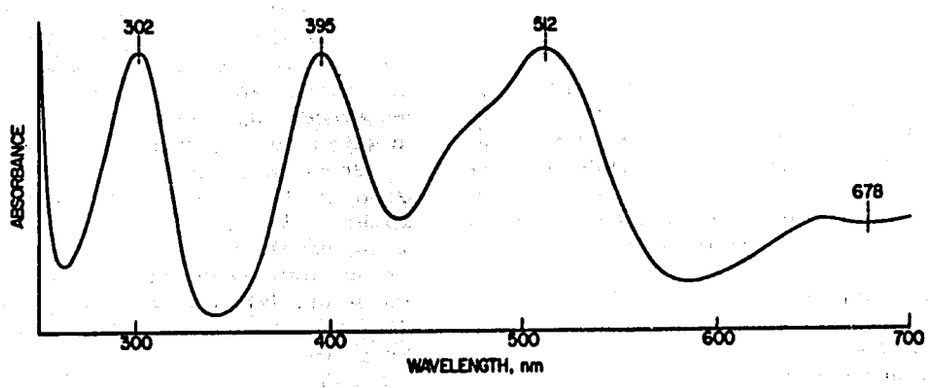

FIGURE 1. *Relative absorbance spectra of NBS-SRM 931, Liquid Filters for Spectrophotometry.*

The maxima at 302 and 512 nm is caused by absorption by NO_3^- and $Co(H_2O)_6^{++}$, respectively. The maximum at 395 nm and the plateau at 650–700 nm are caused by $Ni(H_2O)_6^{++}$. The pH of these solutions is about 1. The absorption curve (fig. 1) of this SRM is wavelength dependent [9]. The certified values for "net absorbance" of SRM 931 are given on the Certificate (Appendix J).

The possibility exists that measurements could be made with an instrument meeting all criteria for accuracy and precision and still yield poor results. This could be caused by faulty operator techniques, problems with cuvettes, or improper preparation of solutions. To test the entire spectrophotometric measurement system, a stable, easily prepared solution having accurately known spectral characteristics is highly desirable. Several such solutions have been proposed, some of which are listed below:

(a) An alkaline solution of potassium chromate [10].
(b) Solutions of potassium dichromate in 0.01 *N* sulfuric acid at concentrations of 0.0500 and 0.1000 gram per liter [11].
(c) Solutions of cobalt ammonium sulfate in dilute sulfuric acid [8].
(d) Potassium nitrate solution.

NBS has supplies of certain high-purity salts that are currently being issued as SRM's for other purposes. These include potassium hydrogen phthalate (SRM 84h), potassium dichromate (SRM 136c), potassium nitrate (SRM 193), and benzoic acid (SRM 350). NBS plans to measure the absorption spectra of solutions of each of these materials and may issue a set of the four materials as an SRM with directions for preparing solutions of known characteristics.

2. *Ion-Selective Electrodes.*

The use of the ion-selective electrode in the clinical laboratory is not new. The determination of acidity (pH) has been carried out for many years [12]. More recently, the use of ion-selective electrodes has been extended to include various inorganic electrolytes [13]. Still more recently, electrodes have been designed to measure organic compounds [14]. As the areas of usefulness of the various ion-selective electrodes are extended and their miniaturization is achieved, their use in the clinical laboratory should increase markedly.

It has long been recognized that the pH of blood reflects the acid-base balance of the body. The pH level is controlled between relatively narrow limits by intricate mechanisms involving the production, elimination and buffering of acids by the body. Its measurement is of great significance and may be related to a large number of specific pathologic conditions, including respiratory, gastro-intestinal, and renal diseases [15].

In routine measurements of pH, the electrode and emf measuring potentiometer used are not highly stable and must be calibrated periodically for accurate work. The subject of standards for acidity measurements has been discussed [16], and NBS has issued a series of SRM's defining the pH scale from 1.7 to 10.0. The mixed phosphate buffers (SRM 186Ic, KH_2PO_4, and SRM 186IIc, Na_2HPO_4) have been useful in the normal physiological range, although problems with their use, such as precipitation of serum calcium, do exist. To correct some of these problems, mixtures of tris(hydroxymethyl)aminomethane, and its hydrochloride have come into use, and SRM's of these materials are now available (see Appendix K).

The determinations of other electrolytes by ion-selective electrode techniques are performed as for pH. Again, careful calibration is necessary for accurate results. At present, three SRM's are available for calibration of ion-selective electrodes (Appendix L). Each SRM is certified for the activity coefficient of the cation and anion as well as the p(Ion) value at several concentrations. Plans have been made to prepare calcium and silver SRM's for ion-selective electrodes.

3. *Clinical SRM's.*

The generalized techniques described previously and the SRM's that control them are used to determine many different constituents of body fluids. Also available from NBS is a group of SRM's for standardization of methods used for specific components (Appendix M).

All of the materials listed in Appendix L are highly purified. The serum constituent to which they refer is obvious, except that of D-Mannitol (SRM 920) which is used in the determination of triglycerides. Each of the SRM's is dissolved in the appropriate solvent and subjected to the same manual or automatic treatment as the serum.

The clinical SRM's have been criticized as being "useless in this form . . . what the clinical laboratory needs are SRM's in a serum or other matrix." However, analytical biological chemistry has not reached the state-of-the-art where this can be done. Homogeneous sera samples could doubtlessly be prepared, but at present this would lead only to improvement in precision, while the goal of standardization in clinical chemistry is compatibility through accuracy. At this time, the only route to accuracy is through the use of a reference method that will give accurate results with both pure-material SRM's and serum. When reference methods are perfected, the preparation of accurately characterized serum SRM's will be possible.

For electrolytes, the state-of-the-art is such that most constituents can be determined directly in serum using isotope-dilution mass spectrometry. Certain other electrolytes can be determined by "classical chemical" or carefully controlled spectro-

scopic methods. In cooperation with the Center for Disease Control, NBS is studying the development of SRM's containing sodium, potassium, calcium, magnesium, lithium, and chloride at three concentrations in serum, and the development of associated reference methods. Such development will be a genuine break-through, but the certification of similar organic and biochemical-type SRM's in serum must await the development and improvement of organic analytical methodology.

Research and development work on additional SRM's is being pursued. In many cases this work demands the development of new analytical competences. A priority list for clinical SRM's (Appendix N) was developed by the NBS Analytical Chemistry Division Clinical Chemistry Advisory Panel in 1973, and work on the higher priority materials is underway. The Catalog of Standard Reference Materials will list these materials when they become SRM's.

4. *Reagent Chemicals.*

As equally important as the use of SRM's to control the quality of data, is the use of quality reagents used to produce the data. These reagents serve a variety of functions: reactant, stabilizer, solvent, buffer, catalyst, cofactor, etc. Each reagent chemical added to the chemical system introduces some impurities, some of which may produce unexpected and possibly undesirable results [17].

At present two major works deal with specifications for reagent chemicals. One is published in the United States by the American Chemical Society [18], the other in Great Britain by Analar Standards, Ltd. [19]. Both of these sets of specifications require minimum assay values and define in depth the limits for impurities.

Throughout the world there are a number of pharmacopeial compendia. These primarily define chemicals that are to be used as drugs so that there will be no toxic or other deleterious effect. There are two such volumes in the United States, the United States Pharmacopeia [20] and National Formulary [21].

A generalized scheme was devised by the IUPAC Analytical Standards sub-committee to classify reagent chemicals [22]. This system embraces only highest purity chemicals as follows:

Grade A: atomic-weight standard.
Grade B: ultimate standard—a substance which can be purified to virtually atomic-weight standard.
Grade C: primary standard—a commercially available substance of purity 100±0.02 percent.
Grade D: working standard—a commercially available substance of purity 100±0.05 percent.
Grade E: secondary standard—a substance of lower purity, which can be standardized against primary (Grade C) material.

Obviously, a great many reagents in the area of biological and organic chemistry do not fit into this system. Radin has worked for several years to extend this classification to include such materials. However, his efforts have not been widely accepted to date. The National Academy of Sciences has attempted to fill this gap with "Specification and Criteria for Biochemical Compounds" [23] which provides specifications and criteria for about 500 biochemicals.

The most important, and possibly the least studied, reagent in clinical chemistry is reagent water. Nothing varies so much from laboratory to laboratory or with time. Generally, the quality of reagent water is assessed on the basis of its conductivity or concentrations of inorganic salts. Only the specialist thinks about possible organic and biological impurities. Specifications for reagent water are given in the ACS Reagent Chemicals [18] and in the ASTM Book of Standards [24]. The problems and implications arising from the contaminants in reagent water have been documented by Winstead [25].

5. *Kits.*

In recent years the use of self-contained kits has greatly increased in clinical chemistry, especially in the physician's office or in the small laboratory. A kit has been defined as any single reagent or combination of reagents and instruments packaged together with instructions for use in a clinical laboratory. This definition could be quite easily interpreted to include everything from the simplest reagent test tube ensemble intended for a specific determination to a multichannel automated analysis machine.

There are some 400 companies in the United States engaged in the manufacture of clinical kits. These manufacturers and the nature of their kits are described in the publication "List of Test Kits for Clinical Laboratories" issued by the Center for Disease Control [26]. For data on any specific kit, the reader should write directly to the manufacturer.

Studies have been made by J. E. Logan and his associates at the Canadian Communicable Disease Center on methods and instrument in use in Canadian Clinical Laboratories [27, 28]. These workers have also studied the merits of various kits for the determination of calcium [29], glucose [30], urea nitrogen [31], and cholesterol [32].

6. *Sources of Methodology.*

In most of the sections of this publication, the methods described as used in the laboratories are of the standardized type. Such methods have been developed by consensus procedures and often have a quasi-legal status. Such methods are developed by the American Society for Testing and Materials, the International Standards Organization, and various special groups such as the Trade Association of Pulp and Paper Industries (TAPPI) and the American Association of Textile Chemists and Colorists (AATCC).

In the clinical laboratory the situation is different. No standard methods exist in the ASTM sense. In general, the methods used in a given laboratory are chosen by the director of that laboratory from the journal literature and textbooks. Many of the methods used in clinical laboratories are the methods adopted by a kit manufacturer or are those employed by the automated systems in use in that laboratory.

The following textbooks and journals are suggested without comment as sources of laboratory methods.

a. Textbooks

(1) Henry, R. J., Clinical Chemistry, Principles and Technics, Hoeber Medical Division, Harper and Row, 1964 (and later revisions).

(2) Todd-Sanford-Clinical Diagnosis by Laboratory Methods, 14th Edition, O. Davidson and J. B. Henry, Ed., W. B. Saunders Co., Philadelphia, Pa. 1969.

(3) Fundamentals of Clinical Chemistry, N. W. Tietz, Ed., W. B. Saunders Co., Philadelphia, Pa. 1970.

(4) Reynolds, M. D., Clinical Chemistry for the Small Hospital, C. C. Thomas, Springfield, Ill. 1969.

b. Journals

(1) American Journal of Clinical Pathology (monthly), American Society of Clinical Pathologists, Chicago, Ill.

(2) Clinical Chemistry (monthly), American Association of Clinical Chemists, Winston-Salem, N.C.

(3) Clinical Biochemistry (monthly), Canadian Society of Clinical Chemists, Ottawa, Ontario.

(4) Clinica Chimica Acta (monthly), Elsevier Publishing Co., Amsterdam, Netherlands.

(5) Analytical Chemistry (monthly), American Chemical Society, Washington, D.C.

Every second year, a review of analytical methods used in the clinical laboratory is published in this journal, usually in the April issue, as was the case in 1973 [33].

c. Standard Methods in Clinical Chemistry.

In recent years, the American Association of Clinical Chemists has published a periodical treatise entitled, Standard Methods of Clinical Chemistry. These volumes tend to follow the technique of the much older *Organic Syntheses.* A chemist submits what he feels is a good method. This method is then checked by two or more other clinical people. If found satisfactory, it is published. The following criteria have been established for choosing a "Standard Method:"

(1) The method has been published previously, therefore is not presented as new material.

(2) The method may offer an unusually advantageous feature for determining the unknown, such as the Berthelot reaction for ammonia used in the analysis of urea nitrogen.

(3) The method is "sound," has "stood the test of time," and is "widely used."

(4) The method improves another one by overcoming objectionable features and by increasing desirable qualities such as sensitivity, precision, and reliability.

(5) The method promotes the accuracy of analysis, e.g., by introducing a more nearly pure standard.

7. *Reference Methods.*

NBS offers a number of SRM's for use in the steel industry, which are usually in such a form that they can be used side by side with the steels being analyzed. In clinical chemistry this is not the case. The NBS clinical SRM's are pure materials, whereas in the clinical laboratory the substances being analyzed are usually in a complex matrix such as serum, urine, or other body fluid.

The present state-of-the-art has not developed sufficiently to enable NBS to issue an SRM in which a clinically important component is incorporated into serum. Thus, accurate methods are necessary that will give equally accurate results for a given component regardless of whether that component is in the pure form or in serum. The need for such accurate methods has lead to the development of reference methods.

A reference method is defined as a method of known and proven accuracy, that is, the principal systematic errors or biases of the measurement process have been found, mechanisms elucidated, and these errors eliminated, or reduced to tolerable levels, or when actual physical elimination is impossible, a correction applied [34]. A reference method is not necessarily a legally imposed, a preferred, or a qualification method. It is not necessarily an easily used method, indeed, it may be quite possible that relatively few scientists will be capable of using it. The real value of a reference method is its use in evaluating the more commonly used daily routine methods.

One reference method, Calcium in Serum [34], is an atomic absorption spectrometry analysis based on the method published by Pybus, Feldman, and Bowers [35]. This method was carefully worked through several interlaboratory comparison exercises; the results were evaluated after each exercise and the procedure was changed as necessary. Fortunately, an absolute value for calcium in serum could be obtained by the extremely accurate isotope-dilution mass-spectrometric method. After five exercises, it was felt that the state-of-the-art had been reached. The reference method for calcium is estimated to give a value for calcium that is within ±2 percent of the "true value."

Over the next few years a number of other reference methods will be developed to bring greater accuracy to clinical chemistry.

8. Standardization Activities.

A quality control system is essentially an intelligence or surveillance operation. It yields information that can be used to bring about remedial action and initiate a search for sources of error. A complete system of quality surveillance includes two aspects. The first is the measurement of internal precision or reproducibility and is concerned with *internal comparability*. The second is an estimate of comparability with other laboratories. One way to accomplish this *inter-laboratory comparability* is by the exchange of stable reference samples.

Proficiency Testing is a special type of *external surveillance* of the laboratory. It is, usually limited in scope, intermittent, and relatively slow in response. It is a method by which a large number of laboratories may be intercompared, but it should not be regarded as a substitute for internal quality control [36].

Quality control systems involve the distribution of samples to the participating laboratories. A goal for precision and accuracy may or may not be established for a given exercise. The distributed samples are analyzed by the participating laboratories, the data returned to the evaluating group and statistically analyzed. Each laboratory is evaluated and, if appropriate, rated on its relative attainment of the predetermined goal. If necessary, remedial and improvement measures are suggested.

At present there are two major interlaboratory quality control operations in the United States. Since 1949, the Standards Committee of the College of American Pathologists has maintained this service for its members. More recently, as a result of the Medicare Act, the Center for Disease Control has established a "Proficiency Testing" program to evaluate clinical laboratories operating in interstate commerce and/or under the Medicare Program.

In addition to the above, two major activities are directed toward standardization of materials, reagents, apparatus, and methods. The Standards Committee of the American Association of Clinical Chemists is engaged in development of SRM's, the studies of control materials, and education of clinical personnel. The group is divided into several subcommittees including, e.g., Organic Standards, Spectrophotometry Standards, Protein Standards, Inorganic Standards, and Enzymes. The National Committee for Clinical Laboratory Standards consists of representatives of professional societies, clinical laboratory supplies manufacturers, and government. Its goal is a series of standard specifications and methods in areas of clinical chemistry, hematology, instrumentation, and microbiology.

Additional activities are underway at the State level in many places. As the importance of accuracy in clinical chemistry is generally recognized, the work of these various standardization activities will assume added importance.

References

[1] Young, D. S., Factors Influencing the Concentration of Serum Constituents in Well Individuals, American Assoc. of Clinical Chemists Meeting, Cincinnati, Ohio, August 24, 1972.

[2] Hughes, J. C., Testing of Glass Volumetric Apparatus, NBS Circ. 602 (1959).

[3] Sappenfield, K. M., Marinenko, G., and Hague, J. L., Comparison of Redox Standards, Nat. Bur. Stand. (U.S.), Spec. Publ. 260-24, 97 pages (Jan. 1972).

[4] Rand, R. M., Practical Spectrophotometric Standards, Clin. Chem. **15**, 839 (1969).

[5] Manual of Recommended Practices in Spectrophotometry, Amer. Soc. for Testing & Matls., Philadelphia, Pa. (1966).

[6] Edisbury, J. R., Practical Hints on Absorption Spectrometry (Plenum Publishing Co., New York, N.Y., 1967).

[7] Mavrodineanu, R., and Lazar, J. W., Standard Reference Materials: Standard quartz cuvettes for high-accuracy spectrophotometry, Clin. Chem. **19**, No. 9, 1053 (Sept. 1973).

[8] Standards for checking the calibration of spectrometers (200–1000 mμ); NBS Letter Circ. No. 1017 (1955).

[9] Mavrodineanu, R., Nat. Bur. Stand. (U.S.), Tech. Note 584, O. Menis and J. I. Schultz, Eds. 175 pages (Dec. 1971).

[10] Haupt, G. W., An alkaline solution of potassium chromate as a transmittance standard in the ultraviolet, J. Opt. Soc. Amer. **42**, 441 (1952).

[11] PSG Collaborative test of 94 recording spectrometers, Photoelec. Spectrometry Group Bull. **16**, 441 (1965).

[12] Bates, R. G., Determination of pH, Theory and Practice, (John Wiley & Son, New York, New York, 1964).

[13] Ion-Selective Electrodes, R. A. Durst, Ed., Nat. Bur. Stand. (U.S.), Spec. Publ. 314, 474 pages (Nov. 1969).

[14] Guilbault, G. G., and Shu, F. R., Enzyme electrodes based on the use of a carbon dioxide sensor, Urea and l-Tyrosine Electrodes, Anal. Chem. **44**, 2161 (1972).

[15] Meinke, W. W., Standard Reference Materials for clinical measurements, Anal. Chem. **43**, 28A (1971).

[16] Bates, R. G., Standardization of acidity measurements, Anal. Chem. **40**, (1968).

[17] Schaffer, R., Diagnostic Materials in Clinical Analysis, International Conference on Standardization of Diagnostic Materials, Atlanta, Georgia, June 1973.

[18] Reagent Chemicals, 4th Edition, Am. Chem. Soc., Washington, D.C., 1968.

[19] Analar Standards for Laboratory Chemicals, 6th Edition, Analar Standards, Ltd., London, 1967.

[20] The Pharmacopeia of the United States of America, 18th Revision, the United States Pharmacopeial Convention, Bethesda, Maryland, 1970.
[21] The National Formulary, 13th Edition, American Pharmaceutical Association, Washington, D.C., 1970.
[22] Report Prepared by the Analytical Standards Subcommittee, Analyst **90**, 251 (1965).
[23] Specifications and Criteria for Biochemical Compounds, 3rd edition, E. S. Tipson, Ed., National Academy of Sciences, Washington, D.C., 1972.
[24] Annual Book of ASTM Standards, Part 23—Water; Atmosphere Analysis, Amer. Soc. for Testing & Matls., 1972.
[25] Winstead, M., Reagent Grade Water, Am. Soc. Med. Tech., The Steck Company, Austin, Texas, 1967.
[26] List of Test Kits for Clinical Laboratories (Clinical Chemistry, Hematology, Microbiology), Center for Disease Control, Atlanta, Ga., 1972.
[27] Logan, J. E., A Survey of Methods and Instruments in Use in Laboratories of Members of the Canadian Society of Clinical Chemists Across Canada, Clin. Biochem. **2**, 215 (1969).
[28] Logan, J. E., Renton, H. M., and Allen, R. H., The use of diagnostic kits and reagents in the Clinical Laboratories of Canada, Clin. Biochem. **3**, 81 (1970).
[29] Sunderland, M. L. E., Weatherburn, M. W., and Logan, J. E., Observations on diagnostic kits for the determination of calcium in serum, Clin. Biochem. **4**, 16 (1971).
[30] Logan, J. E., Waddell, L. D., and Krynski, I. A., Observations on diagnostic kits for the determination of glucose, Clin. Biochem. **4**, 16 (1971).
[31] Logan, J. E., Renton, H. M., and Eby, P. W., Observations of diagnostic kits for the determination of urea nitrogen, Clin. Biochem. **2**, 189 (1969).
[32] Krynski, I. A., and Logan, J. E., Observations on Diagnostic Kits for the Determination of Cholesterol, Clin. Biochem. **2**, 105 (1968).
[33] Gochman, N., and Young, P. S., Analytical Review—Clinical Chemistry, Anal. Chem. **45**, 11R (1973).
[34] Cali, J. P., Mandel, J., Moore, L., and Young, D. S., A referee method for the determination of calcium in serum, Nat. Bur. Stand. (U.S.), Spec. Publ. 260-36, 136 pages (May 1972).
[35] Pybus, J., Feldman, F. J., and Bowers, G. N., Jr., Measurement of Total Calcium in Serum by Atomic Absorption Spectrometry, With Use of a Strontium Internal Reference, Clin. Chem. **16**, 998 (1970).
[36] Boutwell, J. H., Quality Control—Clinical Chemistry, Center for Disease Control, Atlanta, Ga., 1968.

Appendices

	Page
A. List of NBS Publications in the Standard Reference Materials "260" Series	34
B. Certificate of Analysis, Standard Reference Material 8j, Bessemer Steel (Simulated), 0.1% Carbon	36
C. Summary of Compositions, 1200 Series Iron and Steel Standards	37
D. Primary, Working, and Secondary Standard Chemicals Available from the National Bureau of Standards	38
E. Special Nuclear Standard Reference Materials Available from the National Bureau of Standards	39
F. Isotopic Reference Standards Available from the National Bureau of Standards	40
G. Summary of Composition for Portland Cements, SRM's 633–639	40
H. Certificate, Standard Reference Material 932, Quartz Cuvette for Spectrophotometry	41
I. Certificate, Standard Reference Material 930a, Glass Filters for Spectrophotometry	43
J. Certificate, Standard Reference Material 931, Liquid Absorbance Standards for Ultraviolet and Visible Spectrophotometry	46
K. Standard Reference Materials for pH Available from the National Bureau of Standards	50
L. Ion-Selective Electrode Standard Reference Materials Available from the National Bureau of Standards	50
M. NBS—Clinical Standard Reference Materials	51
N. Priority of Work on Clinical Standard Reference Materials	51

Appendix A. List of NBS Publications in the Standard Reference Materials "260" Series

NBS Spec. Publ. 260, Standard Reference Materials: 1973 Catalog, April 1973, $1.25.*

NBS Misc. Publ. 260-1, Standard Reference Materials: Preparation of NBS White Cast Iron Spectrochemical Standards, June 1964, NTIS No. COM 74-11061, Springfield, Va. 22151.**

NBS Misc. Publ. 260-2, Standard Reference Materials: Preparation of NBS Copper-Base Spectrochemical Standards, October 1964, NTIS No. COM 74-11063, Springfield, Va. 22151**.

NBS Misc. Publ. 260-3, Standard Reference Materials: Metallographic Characterization of an NBS Spectrometric Low-Alloy Steel Standard, October 1964, NTIS No. COM 74-11060, Springfield, Va. 22151.**

NBS Misc. Publ. 260-4, Standard Reference Materials: Sources of Information on Standard Reference Materials, February 1965, NTIS No. COM 74-11059, Springfield, Va. 22151.**

NBS Misc. Publ. 260-5, Standard Reference Materials: Accuracy of Solution X-Ray Spectrometric Analysis of Copper-Base Alloys, March 1965. (Out of print).

NBS Misc. Publ. 260-6, Standard Reference Materials: Methods for the Chemical Analysis of White Cast Iron Standards, July 1965.

NBS Misc. Publ. 260-7, Standard Reference Materials: Methods for the Chemical Analysis of NBS Copper-Base Spectrochemical Standards, October 1965, NTIS No. COM 74-11067, Springfield, Va. 22151.**

NBS Misc. Publ. 260-8, Standard Reference Materials: Analysis of Uranium Concentrates at the National Bureau of Standards, December 1965, NTIS No. COM 74-11066, Springfield, Va. 22151.**

NBS Misc. Publ. 260-9, Standard Reference Materials: Half Lives of Materials Used in the Preparation of Standard Reference Materials of Nineteen Radioactive Nuclides Issued by the National Bureau of Standards, November 1965, NTIS No. COM 74-11065, Springfield, Va. 22151.**

NBS Misc. Publ. 260-10, Standard Reference Materials: Homogeneity Characterization on NBS Spectrometric Standards II: Cartridge Brass and Low-Alloy Steel, December 1965, NTIS No. COM 74-11064, Springfield, Va. 22151.**

NBS Misc. Publ. 260-11, Standard Reference Materials: Viscosity of a Standard Lead-Silica Glass, November 1966. 25 cents.*

NBS Misc. Publ. 260-12, Standard Reference Materials: Homogeneity Characterization of NBS Spectrometric Standards III: White Cast Iron and Stainless Steel Powder Compact, September 1966. 20 cents.*

NBS Misc. Publ. 260-13, Standard Reference Materials: Mossbauer Spectroscopy Standard for the Chemical Shift of Iron Compounds, July 1967. 40 cents.*

NBS Misc. Publ. 260-14, Standard Reference Materials: Determination of Oxygen in Ferrous Materials—SRM 1090, 1091, and 1092, September 1966. 30 cents.*

NBS Misc. Publ. 260-15, Standard Reference Materials: Recommended Method of Use of Standard Light-Sensitive Paper for Calibrating Carbon Arcs Used in Testing Textiles for Colorfastness to Light, June 1967. Superseded by SP260-41.

NBS Spec. Publ. 260-16, Standard Reference Materials: Homogeneity Characterization of NBS Spectrometric Standards IV: Preparation and Microprobe Characterization of W-20% Mo Alloy Fabricated by Powder Metallurgical Methods, January 1969, NTIS No. COM 74-11062, Springfield, Va. 22151.**

NBS Spec. Publ. 260-17, Standard Reference Materials: Boric Acid; Isotopic and Assay Standard Reference Materials, February 1970. 65 cents.*

NBS Spec. Publ. 260-18, Standard Reference Materials: Calibration of NBS Secondary Standard Magnetic Tape (Computer Amplitude Reference) Using the Reference Tape Amplitude Measurement "Process A," November 1969. Superseded by SP260-29.

NBS Spec. Publ. 260-19, Standard Reference Materials: Analysis of Interlaboratory Measurements on the Vapor Pressure of Gold (Certification of Standard Reference Material 745). January 1970. 30 cents.*

NBS Spec. Publ. 260-21, Standard Reference Materials: Analysis of Interlaboratory Measurements on the Vapor Pressures of Cadmium and Silver, January 1971. 35 cents.*

NBS Spec. Publ. 260-22, Standard Reference Materials: Homogeneity Characterization of Fe-3Si Alloy, February 1971. 35 cents.*

NBS Spec. Publ. 260-23, Standard Reference Materials: Viscosity of a Standard Borosilicate Glass, December 1970. 25 cents.*

NBS Spec. Publ. 260-24, Standard Reference Materials: Comparison of Redox Standards, January 1972. $1.*

NBS Spec. Publ. 260-25, Standard Reference Materials: A Standard Reference Material Containing Nominally Four Percent Austenite, February 1971. 30 cents.*

NBS Spec. Publ. 260-26, Standard Reference Materials: National Bureau of Standards—

U.S. Steel Corporation Joint Program for Determining Oxygen and Nitrogen in Steel, February 1971. 50 cents.*

NBS Spec. Publ. 260-27, Standard Reference Materials: Uranium Isotopic Standard Reference Materials, April 1971. $1.25.*

NBS Spec. Publ. 260-28, Standard Reference Materials: Preparation and Evaluation of SRM's 481 and 482 Gold-Silver and Gold-Copper Alloys for Microanalysis, August 1971, NTIS No. COM 71-50365, Springfield, Va. 22151.**

NBS Spec. Publ. 260-29, Standard Reference Materials: Calibration of NBS Secondary Standard Magnetic Tape (Computer Amplitude Reference) Using the Reference Tape Amplitude Measurement "Process A-Model 2," June 1971. NTIS No. COM 71-50282, Springfield, Va. 22151.**

NBS Spec. Publ. 260-30, Standard Reference Materials: Standard Samples Issued in the USSR (A Translation from the Russian), June 1971, NTIS No. COM 71-50283, Springfield, Va. 22151.**

NBS Spec. Publ. 260-31, Standard Reference Materials: Thermal Conductivity of Electrolytic Iron SRM 734 from 4 to 300 K, November 1971, NTIS No. COM 71-50563, Springfield, Va. 22151.**

NBS Spec. Publ. 260-32, Standard Reference Materials: Standard Quartz Cuvettes For High Accuracy Spectrophotometry. December 1973. 55 cents.*

NBS Spec. Publ. 260-33, Standard Reference Materials: Comparison of Original and Supplemental SRM 705, Narrow Molecular Weight Distribution Polystyrene, H. L. Wagner, May 1972, NTIS No. COM 72-50526, Springfield, Va. 22151.**

NBS Spec. Publ. 260-34, Standard Reference Materials: Thermoelectric Voltage, April 1972, NTIS No. COM 72-50371, Springfield, Va. 22151.**

NBS Spec. Publ. 260-35, Standard Reference Materials: Thermal Conductivity of Austenitic Stainless Steel, SRM 735 from 5 to 280 K, April 1972. 35 cents.*

NBS Spec. Publ. 260-36, Standard Reference Materials: A Referee Method for the Determination of Calcium in Serum. SRM 915, May 1972, NTIS No. COM 72-50527, Springfield, Va. 22151.**

NBS Spec. Publ. 260-37, Standard Reference Materials: Methods of Analysis of NBS Clay Standards, June 1972, NTIS No. COM 72-50692, Springfield, Va. 22151.**

NBS Spec. Publ. 260-38, Standard Reference Materials: Preparation and Calibration of Standards of Spectral Specular Reflectance, May 1972. 60 cents.*

NBS Spec. Publ. 260-39, Standard Reference Materials: The Eddy Current Decay Method for Resistivity Characterization of High-Purity Metals, May 1972. 55 cents.*

NBS Spec. Publ. 260-40, Standard Reference Materials: Selection of Thermal Analysis Temperature Standards Through a Cooperative Study (SRM 758, 759, 760) August 1972. 65 cents.*

NBS Spec. Publ. 260-41, Standard Reference Materials: Use of Standard Light-Sensitive Paper for Calibrating Carbon Arcs used in Testing Textiles for Colorfastness to Light, August 1972, NTIS No. COM 72-50775, Springfield, Va. 22151.**

NBS Spec. Publ. 260-42, Standard Reference Materials: The Characterization of Linear Polyethylene, SRM 1475, September 1972. 45 cents.*

NBS Spec. Publ. 260-43, Standard Reference Materials: Preparation and Homogeneity Characterization of an Austenitic Iron-Chromium-Nickel Alloy, November 1972. 45 cents.*

NBS Spec. Publ. 260-44, Standard Reference Materials: Preparation and Use of Superconductive Fixed Point Devices, SRM 767, December 1972. 75 cents.*

NBS Spec. Publ. 260-45, Standard Reference Materials: Powdered Lead-Based Paint, SRM 1579, March 1973. 50 cents.*

NBS Spec. Publ. 260-47, Standard Reference Materials: Electrical Resistivity of Electrolytic Iron, SRM 797, and Austenitic Stainless Steel, SRM 798, from 5 to 280 K. February 1974. 55 cents.*

NBS Spec. Publ. 260-48, Standard Reference Materials: Description and Use of Precision Thermometers for the Clinical Laboratory, SRM 933 and SRM 934, May 1974. 60 cents.*

---

*Send order with remittance to Superintendent of Documents, U.S. Government Printing Office, Washington, D.C. 20402. Remittance from foreign countries should include an additional one-fourth of the purchase price for postage.

**Send order to: National Technical Information Service (NTIS), Springfield, Va. 22151.

Appendix B. Certificate of Analysis, Standard Reference Material 8j, Bessemer Steel

National Bureau of Standards

Certificate of Analysis

Standard Reference Material 8j

Bessemer Steel (Simulated), 0.1% Carbon

	C	Mn	P	S	Si	Cu	Ni	Cr	V	Mo
ANALYST	Combustion-chromatographic	Persulfate-Arsenite	Spectrophotometric	Combustion-Titration	Perchloric acid dehydration	Spectrophotometric	Spectrophotometric			Spectrophotometric
1	0.081[a]	0.505[b]	0.098	0.077[c]	0.059[d]	0.022[e]	0.114	0.048[f]	0.015[g]	0.037
2	.080	.500	.095[h]	076	.048[d]	.018[e]	.110[i]	{.048[j] .046[k]}	.016[k]	.038
3	.082	.505	{.094[l] .095[h]}	.077[c]	{.056[d] .060[r]}	.020[m]	{.116[n] .115}	.046[o]	.014[p]	.041
4	.080	{.509 .508[q]}	{.095[h] .094}	.078[c]	{.063[d] .065[r]}	.020[m]	{.110[n] .113}	.046[s]	.015[t]	.038
Average	0.081	0.505	0.095	0.077	0.058	0.020	0.113	0.047	0.015	0.038

[a] 1-g sample, tin-coated copper accelerator.
[b] Potentiometric titration.
[c] 1-g sample burned in oxygen at 1425 °C and sulfur dioxide absorbed in starch-iodide solution. Iodine liberated from iodide by titration, during the combustion, with standard KIO_3 solution.
[d] Double dehydration.
[e] Diethyldithiocarbamate photometric method.
[f] Chromium separated from the bulk of the iron in a 10-g sample by $NaHCO_3$ hydrolysis, oxidized with peroxydisulfate, and titrated potentiometrically with ferrous ammonium sulfate.
[g] Vanadium separated as in (f), oxidized with HNO_3 and titrated potentiometrically with ferrous ammonium sulfate.
[h] Alkali-molybdate.
[i] Same value obtained by gravimetric method.
[j] Diphenylcarbazide photometric method.
[k] Atomic absorption spectrometry.
[l] Gravimetric – $Mg_2P_2O_7$.
[m] Neocuproine photometric method.
[n] Dimethylglyoxime gravimetric method.
[o] Peroxydisulfate oxidation – $Fe(NH_4)(SO_4)_2$ – $KMnO_4$ titration.
[p] $FeSO_4(NH_4)_2S_2O_8$-$KMnO_4$ titration.
[q] KIO_4 photometric method.
[r] Silicomolybdate photometric method.
[s] Chromium oxidized with peroxydisulfate and titrated amperometrically with ferrous ammonium sulfate.
[t] $KMnO_4$-KNO_2-Urea-$Fe(NH_4)_2(SO_4)_2$.

The material for the preparation of this standard was prepared at the Carpenter Technology Corporation, Reading, Pennsylvania.

The overall direction and coordination of the technical measurements leading to certification were performed under the chairmanship of O. Menis and J. I. Shultz.

The technical and support aspects involved in the preparation, certification, and issuance of this Standard Reference Material were coordinated through the Office of Standard Reference Materials by R. E. Michaelis.

Washington, D.C. 20234
April 10, 1972

J. Paul Cali, Chief
Office of Standard Reference Materials

List of Analysts

1. S. A. Wicks, R. K. Bell, and E. R. Deardorff, Analytical Chemistry Division, Institute for Materials Research, National Bureau of Standards.
2. R. W. Bley, Inland Steel Company, East Chicago, Indiana.
3. R. H. Rouse, Bethlehem Steel Corporation, Sparrows Point, Maryland.
4. F. P. Valente, U. S. Army Materials and Mechanics Research Center, Watertown, Massachusetts.

Appendix C. Summary of Compositions, 1200 Series Iron and Steel Standards

NBS No.	1261	1262	1263	1264	1265
Element	Percent, by weight				
C	0.38_2	0.16_0	0.62	0.87_0	0.0067
Mn	.66	1.04	1.50	$.25_5$	.0057
P	.015	0.042	$.02_9$	$.01_8$	$.002_5$
S	.017	.038	.008	.028	.0059
Si	.223	.39	.74	.067	$.008_0$
Cu	.042	.50	$.09_8$	$.24_9$	.0058
Ni	1.99	.39	.32	$.14_2$	.041
Cr	0.69	.30	1.31	$.06_5$	$.007_2$
V	.011	$.04_1$	0.31	$.10_5$	.0006
Mo	.19	$.06_8$	.030	.49	.0056
W	$.01_5$	.21	$.04_5$	.10	(∿.00004) a/
Co	.030	.30	.048	.15	$.007_0$
Ti	.020	.084	.050	.24	.0006
As	.017	$.09_2$	.010	$.05_2$	(.0002)
Sn	$.01_1$	.016	(.095)	[.005] b/	(∿.0002)
Al (Total)	$.02_1$	$.09_5$	.24	(.008)	(.0007)
Nb	.022	.29	.049	$.15_7$	(<.00001)
Ta	.020	.20	(.053)	.11	-(<.00005) c/
B	.0005	.0025+	$.0009_1$	.011	.00013
Pb	$.00002_5$	$.0004_3$	.0022	.024	$.00001_5$ x
Zr	.009	.19	.049	.068	-(<.00001)
Sb	$.004_2$	.012	$.001_6$	(.035)	-(<.00005)
Bi	.0004	(.002)	(.0008)	(.0009)	-(<.00001)
Ag	.0004	(.0010)	(.0038)	(.00002)	(∿.000002)
Au	(<.00005)	(<.00005)	.0005	.0001	-(<.000002)
Ca	(<.0001)	(.0002)	(<.0001)	(<.0001)	-(<.00001)
Mg	(.0001)	(.0006)	(.0005)	(.0001)	-(<.00002)
Se	.004	[.001]	[.0001]	[.0003]	-(<.00001)
Te	.0006	(.0005)	(.0022)	[.0002]	-(<.00001)
Zn	(.0001)	(.0005)	(.0004)	[.001]	(<.0001) x
Ce	$.001_3$	(.0011)	(.0016)	(.00025)	-(<.000005)
La	.0004	.0004	.0006	.00007	-(<.000005)
Nd	.0003	(.0005)	(.0007)	(.00012)	-(<.000005)
Pr	(.00014)	(.00012)	(.00018)	(.00003)	-(<.000005)
Hf	[.0002]	[.006]	[.0015]	[.005]	-(<.00002)
N	(.0037)*	(.0041)*	(.0041)*	[.003]*	(∿.0011)*
O	(.0009)*	(.0011)*	(.0007)*	[.0017]*	(∿.0063)*
H	[<.0005]	[<.0005]	[<.0005]	[<.0005]	(∿.0001)
Ge	[.006]	[.002]	[.010]	[.003]	(∿.0014)
Fe (by diff.)	(95.6)	(95.3)	(94.4)	(96.7)	(99.9)

* From gasometric certificates, SRM's 1095 through 1099

\+ Isotopic dilution mass spectrometry - 0.00265; nuclear track - 0.00234

x Revised final value

a/ Values in parentheses are not proposed for certification. These values usually were obtained by a single analytical method of analysis.

b/ Values in brackets also are not proposed for certification. They are nominal or approximate values from the heat analyses.

c/ Dash indicates "not detected." Values in parentheses following the dash are conservative "upper limits" of detection by specific methods of analysis.

Appendix D. Primary, Working, and Secondary Standard Chemicals Available from the National Bureau of Standards

SRM	Type	Certified Use	Purity
17	Sucrose	Polarimetric Value	([a])
40h	Sodium Oxalate	Reductometric Value	99.95
41a	Dextrose (D-Glucose)	Reductometric Value	([b])
83c	Arsenic trioxide	Reductometric Value	99.99
84h	Acide potassium phthalate	Acidimetric Value	99.99
136c	Potassium dichromate	Oxidimetric Value	99.98
350	Benzoic Acid	Acidimetric Value	99.98
723	Tris(hydroxymethyl)aminomethane	Basimetric Value	99.97
944	Plutonium Sulfate Tetrahydrate	Assay	100
949d	Plutonium Metal	Assay	99.99
950a	Uranium oxide (U_3O_8)	Uranium Oxide Standard Value	99.94
951	Boric Acid	Acidimetric and Boron Isotopic Value	100.00
960	Uranium Metal	Assay	99.975
984	Rubidium Chloride	Assay and Isotopic	99.90
987	Strontium Carbonate	Assay and Isotopic	99.98
988	Strontium-84 Spike	Assay and Isotopic	99.9
999	Potassium Chloride	Assay Standard for {Potassium / Chloride}	99.98 / 99.99

[a] Sucrose—Moisture < 0.01 percent, Reducing Substances < 0.02 percent, Ash 0.003 percent.
[b] Dextrose—Moisture < 0.2 percent, Ash < 0.01 percent.

Appendix E. Special Nuclear Standard Reference Materials Available from the National Bureau of Standards

Number	Description	Certified for
[a]950a	Uranium oxide	Uranium oxide content 99.94%
[a]960	Uranium metal	Uranium content 99.975%
949d	Plutonium metal	Plutonium content 99.99%
944	Plutonium sulfate tetrahydrate	Plutonium content 47.50%
945	Plutonium metal matrix	Trace elements

		[b]Isotopic Abundance (Atom Percent)				
		^{238}Pu	^{239}Pu	^{240}Pu	^{241}Pu	^{242}Pu
946	Plutonium sulfate tetrahydrate	0.247	83.128	12.069	3.991	0.565
947	Plutonium sulfate tetrahydrate	0.296	75.696	18.288	4.540	1.180
948	Plutonium sulfate tetrahydrate	0.011	91.574	7.914	0.468	0.0330

			Isotopic Abundance (Atom Percent)			
			^{234}U	^{235}U	^{236}U	^{238}U
U-0002	U_3O_8	Depleted	0.00016	0.01755	<0.00001	99.9823
U-005	U_3O_8	Depleted	.00218	.4895	.00466	99.504
U-010	U_3O_8	Enriched	.00541	1.0037	.00681	98.984
U-015	U_3O_8	Enriched	.00850	1.5323	.0164	98.443
U-020	U_3O_8	Enriched	.0125	2.038	.0165	97.933
U-030	U_3O_8	Enriched	.0190	3.046	.0204	96.915
U-050	U_3O_8	Enriched	.0279	5.010	.0480	94.915
U-100	U_3O_8	Enriched	.0676	10.190	.0379	89.704
U-150	U_3O_8	Enriched	.0993	15.307	.0660	84.528
U-200	U_3O_8	Enriched	.1246	20.013	.2116	79.651
U-350	U_3O_8	Enriched	.2498	35.190	.1673	64.393
U-500	U_3O_8	Enriched	.5181	49.696	.0755	49.711
U-750	U_3O_8	Enriched	.5923	75.357	.2499	23.801
U-800	U_3O_8	Enriched	.6563	80.279	.2445	18.820
U-850	U_3O_8	Enriched	.6437	85.137	.3704	13.848
U-900	U_3O_8	Enriched	.7777	90.196	.3327	8.693
U-930	U_3O_8	Enriched	1.0812	93.336	.2027	5.380
U-970	U_3O_8	Enriched	1.6653	97.663	.1491	0.5229

[a] Available without license

[b] Isotopic composition slowly changes due to radioactive decay.

Appendix F. Isotopic Reference Standards Available from the National Bureau of Standards

SRM	Isotopic Reference Standards	Element Certified
951	Boric Acid	Boron
952	Boric Acid, 95% enriched ^{10}B	Boron
975	Sodium Chloride	Chlorine
976	Copper Metal	Copper
977	Sodium Bromide	Bromine
978	Silver Nitrate	Silver
979	Chromium Nitrate	Chromium
980	Magnesium Metal	Magnesium
*981	Lead Metal, Natural	Lead
*982	Lead Metal, Equal Atom (206/208)	Lead
*983	Lead Metal, Radiogenic (92%–206)	Lead
984	Rubidium Chloride, assay and isotopic	Rubidium
987	Strontium Carbonate, assay and isotopic	Strontium
988	Strontium-84 Spiked, assay and isotopic	Strontium

*Sold as a set of three only; 981, 982, and 983.

Appendix G. Summary of Composition for Portland Cements, SRM's 633-639

SRM No.	633	634	635	636	637	638	639
Constituent	P-e-r-c-e-n-t by w-e-i-g-h-t						
Al_2O_3	3.7_4	5.2	6.2	3.1	3.3	4.5	4.3
CaO	$64._5$	$62._6$	$59._8$	$63._5$	$66._0$	$62._1$	$65._8$
MgO	1.0_4	3.4	1.2_5	4.0	0.7_2	3.8_4	1.2_9
TiO_2	0.24	0.30	0.32	0.17	0.21	0.25	0.31
SiO_2	21.9	20.7	18.5	23.2	23.1	21.4	21.6
SO_3	2.1_8	2.1_6	7.0	2.3	2.3_3	2.3	2.4
P_2O_5	0.24	0.10	0.17	0.09	0.25	0.06	0.08
Mn_2O_3	0.04	0.28	0.09	0.12	0.06	0.05	0.08
K_2O	0.16_5	0.43	0.45	0.57	0.24_5	0.59	0.05
Na_2O	0.6_4	0.14	0.07	0.10	0.13	0.12	0.6_5
SrO	0.31	0.12	0.22	0.04	0.10	0.07	0.15
Fe_2O_3	4.2	2.8_7	2.6_5	1.6_2	1.8_0	3.5_8	2.4_2
Loss on Ignition	0.7_5	1.6_1	3.2_5	1.1_6	1.6_8	0.9_5	1.0

Appendix H. Certificate, Standard Reference Material 932, Quartz Cuvette for Spectrophotometry

National Bureau of Standards Certificate

Standard Reference Material 932

Quartz Cuvette for Spectrophotometry

R. Mavrodineanu and J. W. Lazar

This Standard Reference Material consists of a single, accurately calibrated cuvette that is issued for use in the production of accurate spectrophotometric data on liquids. The design and dimensions of the all-quartz cuvette are shown in Figure 1. The pathlength of the cuvette is defined by the distances between the two optically transparent windows taken at several heights within the cuvette. Cuvettes issued as Standard Reference Material 932 range in pathlength between 9.97 and 10.03 mm. The inner surfaces of the windows are parallel within 0.002 mm. The pathlength and parallelism are certified with an uncertainty of ±0.0005 mm as determined by measurements (at 20 °C) taken at each 4 mm of height at positions within the cell from 2 mm of the bottom to within 6 mm of the window top.

Cuvette number 46 is issued with this certificate. For this cuvette the following measurements were obtained.

Height mm (approx.)	Pathlength mm
37 (Top)	9.9946
33	9.9938
29	9.9938
25	9.9942
21	9.9946
18	9.9954
14	9.9958
10	9.9963
6	9.9963
2 (Bottom)	9.9967

The cuvette must be handled with great care and should be held only by the frosted-quartz side windows. When not in use, it should be stored in the container provided for this purpose. Extended exposure to laboratory atmosphere and dusty surroundings is to be avoided.

Washington, D. C. 20234
November 5, 1973

J. Paul Cali, Chief
Office of Standard Reference Materials

Appendix H. Certificate, Standard Reference Material 932, Quartz Cuvette for Spectrophotometry—Continued

The cuvette was designed and produced at the National Bureau of Standards using special techniques and non-fluorescent optical-quality fused silica. The transparent windows are attached to the body of the cuvette by direct fusion, and the unit was stress-released by annealing. The overall flatness of each surface of a transparent window is within two fringes (546 nm Hg line), and each window's surfaces are parallel within one micrometer. The radiation pathlength measurements of the cuvette were performed using electronic feeler-gauge type instruments capable of a resolution of 5 parts in 10^6. The development and production of SRM 932 is a result of the combined efforts of the Analytical Chemistry Division of the Institute for Materials Research, the Optical Physics Division of the Institute for Basic Standards, and the Instrument Shops Division.

E. P. Muth and E. I. Klein designed and assembled the cuvette, respectively, and the actual radiation pathlength measurements were performed by E. G. Erber.

The overall direction and coordination of the technical measurements leading to certification were performed under the chairmanship of O. Menis and J. A. Simpson.

The technical and support aspects involved in the preparation, certification and issuance of this Standard Reference Material were coordinated through the Office of Standard Reference Materials by T. W. Mears.

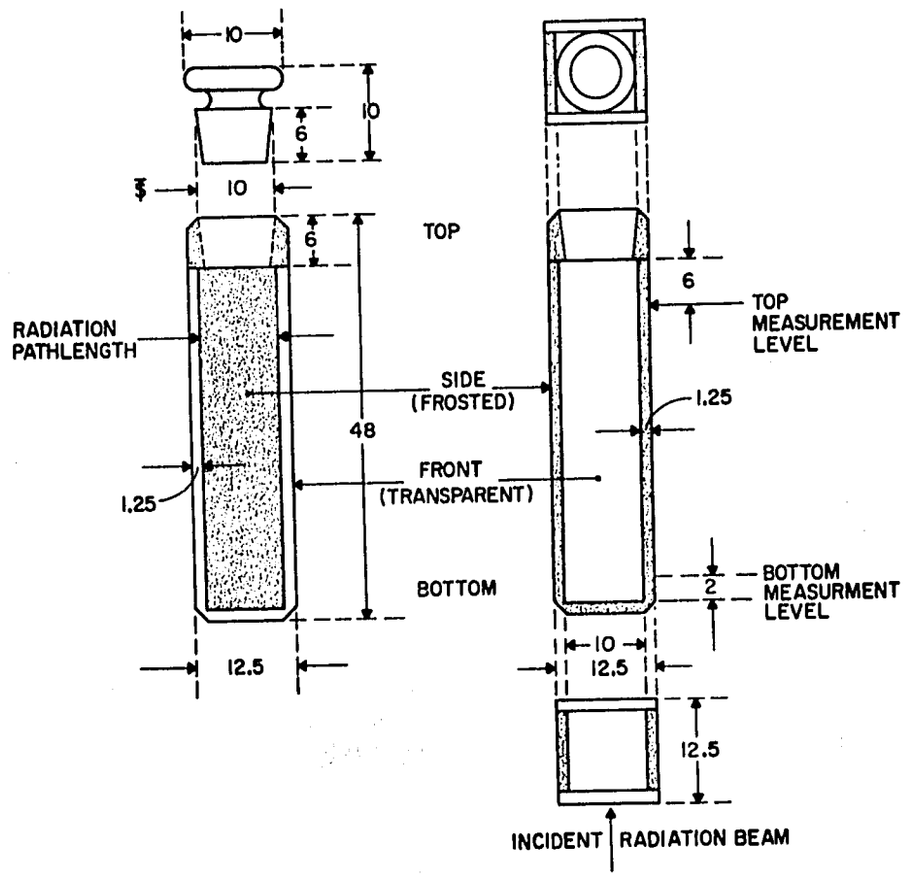

Appendix I. Certificate, Standard Reference Material 930a, Glass Filters for Spectrophotometry

National Bureau of Standards Certificate

Standard Reference Material 930a

Glass Filters for Spectrophotometry

R. Mavrodineanu and J. R. Baldwin

This Standard Reference Material is intended as a reference source for the calibration of the photometric scale of spectrophotometers. It consists of three individual filters. Each filter bears an identification number, and the upper left corner has been removed to indicate correct placing in the metal holder.

Filter and Set Identification Number	ABSORBANCE (A)				TRANSMITTANCE (%T)			
	Wavelength and (Bandpass) nm				Wavelength and (Bandpass) nm			
	440.0 (2.2)	465.0 (2.7)	590.0 (5.4)	635.0 (6.0)	440.0 (2.2)	465.0 (2.7)	590.0 (5.4)	635.0 (6.0)
1-179	1.027	0.954	1.052	1.003	9.39	11.11	8.87	9.94
2-179	0.770	0.716	0.788	0.752	16.98	19.24	16.29	17.71
3-179	0.511	0.4661	0.514	0.501	30.84	34.19	30.60	31.56

The transmittance values given are certified with a relative uncertainty of ±0.5 percent (example: a nominal value of absorbance of 0.500 ± 0.0022). This uncertainty is the sum of the random error of ± 0.1 percent (2SD limit) and of estimated biases which are ± 0.4 percent. These biases are due to possible systematic errors. Measurements were made at 25 °C. Room temperature variations within several degrees Celsius of this temperature will not significantly affect the calibration of these filters.

It is recommended that the filters be handled only by the edges and with soft plastic (polyethylene) gloves and optical lens tissue. When not in use they should be stored in their holders and in the box provided for this purpose. Extended exposure to laboratory atmosphere and dusty surroundings should be avoided.

The overall direction and coordination of the technical measurements leading to certification were performed under the chairmanship of O. Menis and J. I. Shultz.

The technical and support aspects involved in the preparation, certification, and issuance of this Standard Reference Material were coordinated through the Office of Standard Reference Materials by T. W. Mears.

Washington, D. C. 20234
May 15, 1973

J. Paul Cali, Chief
Office of Standard Reference Materials

Appendix I. Certificate, Standard Reference Material 930a, Glass Filters for Spectrophotometry—Continued

The transmittance measurements were made with the high-accuracy spectrophotometer designed and constructed at the National Bureau of Standards [1]. The accuracy of this instrument was established by light-addition measurements.

The neutral NG-4 and NG-5 glasses for the filters were provided by Schott of Mainz, Germany, and are designated as "Jena Colored and Filter Glass." Nominal transmittance for a filter 1.5 mm thick is 20 percent at 400.0 nm wavelength and 32 percent at 700.0 nm wavelength. Between these limits the transmittance varies in a monotonic manner [2].

The filter holder is black anodized aluminum alloy and has the following nominal dimensions: height: 57 mm, width: 73 mm, depth: 13 mm. This holder and the size and shape of the filters were selected to conform to the dimensions of the sample compartment of most conventional spectrophotometers. The filters are approximately 30.5 mm long, 11 mm wide, and 2.0 mm and 1.5 mm thick for the NG-4 glass and 1.5 mm thick for the NG-5 glass. Corresponding to these thicknesses are nominal transmittances of 10, 20, and 30 percent, respectively. These thicknesses were selected to provide a means for calibrating the photometric scale at three different levels. The exposed surface of the glass filter is approximately 29 mm by 8 mm, starting from a distance of 1.5 mm from the filter holder base (see figure).

The transmittance of filters depends on the intrinsic properties of the material. Spectral bandpass, wavelength [2,3,5], geometry of the optical beam, surface conditions, and positioning of the filter also affect the transmittance values, and can lead to further biases. The certified data will be reproduced when transmittance measurements are made under similar conditions. The effective spectral bandpasses used to determine the certified values are given on the face of the certificate and the transmittance measurements are made by producing the vertical image of the slit (about 8 mm by 0.5 mm), using a convergent beam geometry with an opening of f:10, in the middle of the entrance face of the glass filter. (The filter should be positioned in the spectrophotometer as shown in the figure, to obtain correct values.)

Prior to the certification measurements, each filter was examined for surface defects and then thoroughly cleaned. If, through handling, the surface of the filter becomes contaminated with dust, it may be cleaned with a small soft brush attached to a rubber tube connected to a vacuum source [2,4]. If the surface becomes contaminated with fingerprints, they must be eliminated before making measurements. This may be accomplished by removing the filter from its holder, breathing lightly on it, and rubbing the surface gently with optical lens tissue. The clean filter is then replaced in its proper position in its holder. To remove and replace the filter in the metal holder, the spring-loaded plate should be removed with care to prevent damage to the filter. As little handling as possible is recommended.

NOTE: The check of the calibration of photometric scales defines only one of the parameters required for obtaining accurate transmittance values and molar absorptivities. Other factors that also must be established are wavelength accuracy, stray light, cell parameters, fluorescence, polarization, reflection, and temperature coefficient. Some of these variables are discussed in NBS publications [1,2,5]. It is planned to summarize various aspects of accurate spectrophotometric measurements in an NBS-260 Special Publication that would provide additional data on specific Standard Reference Materials. In the interim, SRM 930a, should be used as described in the certificate. Consult the manufacturer of the instrument if differences are obtained that exceed those specified by the manufacturer.

We wish to acknowledge the cooperation of George N. Bowers, Jr., M.D., of Hartford Hospital, Hartford, Connecticut; Royden N. Rand, Ph.D., of the Hospital of the University of Pennsylvania, Philadelphia, Pennsylvania; and Donald S. Young, M.B., Ph.D., of the National Institutes of Health, Bethesda, Maryland.

Appendix I. Certificate, Standard Reference Material 930a, Glass Filters for Spectrophotometry—Continued

1. R. Mavrodineanu, An Accurate Spectrophotometer for Measuring the Transmittance of Solid and Liquid Materials, NBS Journal of Research 76A, No. 5, 405-425 (1972).

2. R. Mavrodineanu, Solid Materials to Check the Photometric Scale of Spectrophotometers, NBS Tech. Note 544, O. Menis and J. I. Shultz, ed., pp 6-17, U.S. Government Printing Office, Washington, D.C. 20402 (Sept. 1970), ibid NBS Tech. Note 584, pp. 2-21 (December 1971).

3. K. S. Gibson, Spectrophotometry. NBS Circ. 484 (Sept. 1949).

4. J. R. Edisbury, Practical Hints on Absorption Spectrophotometry, Plenum Press, New York (1967).

5. Collected Papers from NBS Conference on Accuracy in Spectrophotometry and Luminescence Measurements, NBS Journal of Research 76A, No. 5, 375-510 (1972).

METAL HOLDER FOR THE COLORED GLASS FILTERS

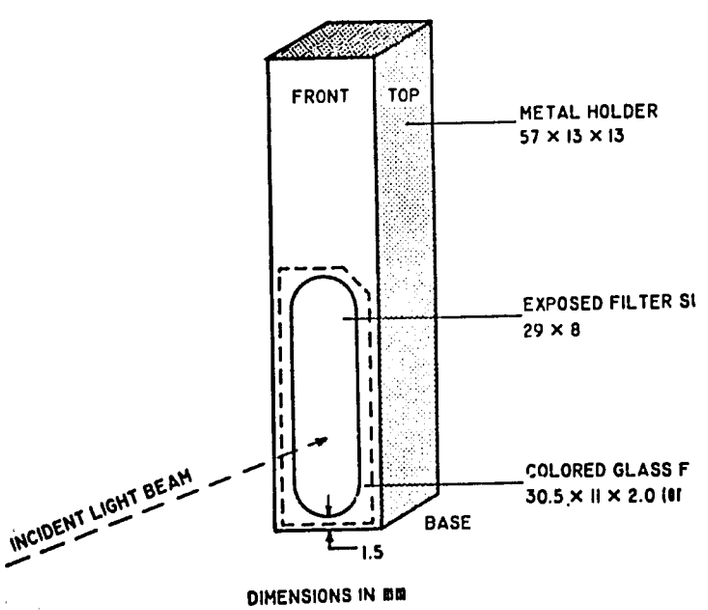

Appendix J. Certificate, Standard Reference Material 931, Liquid Absorbance Standards for Ultraviolet and Visible Spectrophotometry

National Bureau of Standards
Certificate
Standard Reference Material 931
Liquid Absorbance Standards for Ultraviolet and Visible Spectrophotometry

R. W. Burke and E. R. Deardorff

These liquid filters are intended as reference solutions for checking the accuracy of the photometric scale of narrow bandpass spectrophotometers. They are applicable for calibrating those instruments that can provide an effective spectral bandpass of 1.5 nm or less at 302 nm, 2.0 nm or less at 395 nm, 3.3 nm or less at 512 nm and 8.5 nm or less at 678 nm.

Net Absorbance[a]

Filter	Wavelength and (Bandpass), nm			
	302(1.0)	395(1.7)	512(2.0)	678(6.5)
"A"–"Blank"	0.307±0.003	0.304±0.003	0.303±0.003	0.115±0.002
"B"–"Blank"	0.608±0.005	0.605±0.005	0.606±0.005	0.229±0.003
"C"–"Blank"	0.906±0.007	0.907±0.007	0.911±0.007	0.345±0.003

[a]Net absorbances ("A"–"Blank," "B"–"Blank," and "C"–"Blank") were determined using 10.00 mm cuvettes at 25.0 °C, see Instructions for Use.

Absorbance measurements were performed on a high precision double-beam spectrophotometer equipped with a double monochromator. The accuracy of the photometric scale of this instrument was established with the NBS high-accuracy spectrophotometer described by R. Mavrodineanu [1]. The uncertainties of the certified values are twice the standard deviation, commonly referred to as the "95 percent confidence level."

These filters are certified for absorbance at 25.0 °C. Absorbances at other temperatures in the range 17 to 37 °C may be calculated using the formula on page 2.

While no long-term stability studies have been performed on this particular lot of filters, studies of similar preparations have indicated that these filters should be stable for at least one year.

The overall direction and coordination of technical measurements leading to certification were performed under the chairmanship of O. Menis and J. I. Shultz.

The technical and support aspects involved in the preparation, certification, and issuance of this Standard Reference Material were coordinated through the Office of Standard Reference Materials by T. W. Mears.

Washington, D.C. 20234
January 17, 1972

J. Paul Cali, Chief
Office of Standard Reference Materials

Appendix J. Certificate, Standard Reference Material 931, Liquid Absorbance Standards for Ultraviolet and Visible Spectrophotometry—Continued

Absorbance at various temperatures (17 to 35 °C)

$$A_t = A_{25}[1+C_A(t-25)]$$

where: A_t = Absorbance at temperature t (°C)
A_{25} = Absorbance certified at 25.0 °C
C_A = Fractional change in absorbance per °C

The values of C_A, at the four wavelengths, are given below. [NOTE: At wavelength 302 nm, absorbance decreases with increasing temperature; at the other wavelengths, absorbance increases with increasing temperature.]

Wavelength, nm	C_A
302	−0.0014
395	+0.0014
512	+0.0018
678	+0.0014

Instructions for Use

1. Select two clean 10.00 mm cuvettes free of scratches. At least one should be fitted with a ground glass or Teflon stopper to minimize evaporation. Reserve it for all sample measurements.

2. Mark each of the cuvettes to assure the same orientation in the spectrophotometer.

3. Place the cuvettes in their respective holders and fill with distilled water. (Borosilicate Pasteur-type pipettes fitted with rubber bulbs are recommended for transferring all solutions to and from the cuvettes. Soft glass pipettes, which are available commercially, contain residual amounts of ultraviolet absorbing material, but may be used after proper cleaning. Several rinses, first with isopropyl alcohol and then with distilled water, are generally adequate.)

4. Obtain the optical mismatch of the cuvettes at 302, 395, 512, and 678 nm, using the spectral bandpass limitations given on the face of the certificate.

5. Empty the cuvettes by suction without removing them from their holders, refill with distilled water and measure the absorbances again at each of the above wavelengths.

6. Repeat the emptying and refilling operation until constant absorbance readings are obtained.

7. Using the liquid filters provided, measure, in turn, the absorbances of the "Blank," "A," "B," and "C" against distilled water. Shake each ampoule before opening to remix any condensate which may have collected in the neck (the ampoules have been presscored directly below the gold band to facilitate opening).

8. Subtract the appropriate "Blank" reading from the absorbances obtained for "A," "B," and "C." These net absorbances should agree with the certified values within the uncertainties specified. Consult the manufacturer of the instrument if they do not.

The absorbances of these filters will depend not only on the accuracy of the photometric scale but also on the wavelength accuracy and the spectral bandpass. A mercury lamp is recommended for checking the wavelength scale. In addition, for those spectrophotometers having a hydrogen (H) or deuterium (D) source, the two emission lines at 486.1 and 656.3 nm (H) or 486.0 and 656.1 nm (D) may provide a convenient check at these wavelengths.

Appendix J. Certificate, Standard Reference Material 931, Liquid Absorbance Standards for Ultraviolet and Visible Spectrophotometry—Continued

To insure that the measured absorbances are not significantly different from the certified values, the following restrictions are placed on the size of the spectral bandpass selected: To obtain ±0.1 percent of the true value, the effective spectral bandpass should not exceed 1.5, 2.0, 3.3, and 8.5 nm at 302, 395, 512, and 678 nm, respectively. For ±0.2 percent, the respective bandpasses are 2.2, 2.9, 4.8, and 12.3 nm. Additional information on the effect of spectral bandpass on the absorbances of these filters is given in the figure below. These curves are not to be used, however, to correct the measured absorbances.

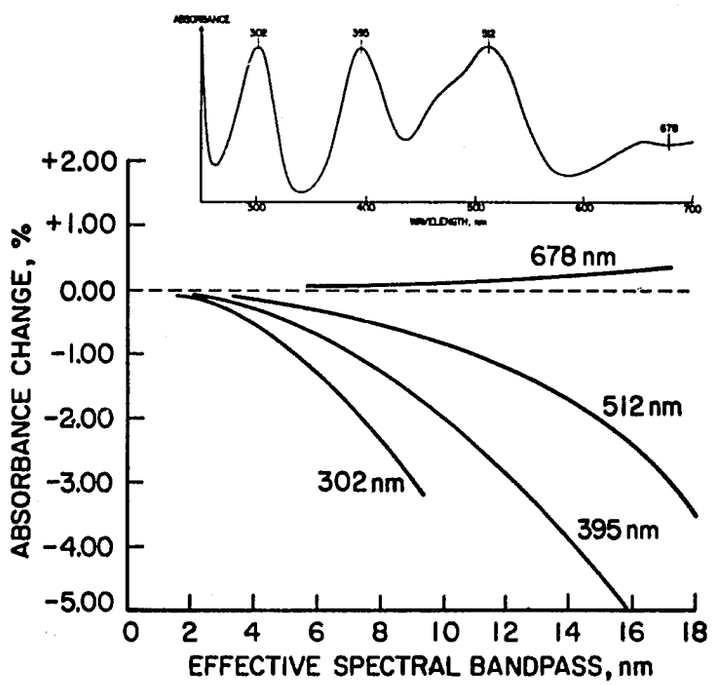

Preparation of filters

The filters were prepared by dissolving high purity cobalt and nickel in a mixture of nitric and perchloric acids. The absorption spectrum of the resulting solution is shown in figure above. The maxima at 302 and 512 nm are due to absorption by NO_3 and $Co(H_2O)_6^{++}$, respectively. The maximum at 395 nm and the plateau at 650-700 nm is due to $Ni(H_2O)_6^{++}$. The pH of these filters is about 1.

Reference

[1] R. Mavrodineanu, NBS Technical Note 584, O. Menis and J. I. Shultz, ed., pp. 2-21, U.S. Government Printing Office, Washington, D.C. 20402 (Dec. 1971).

Appendix J. Certificate, Standard Reference Material 931, Liquid Absorbance Standards for Ultraviolet and Visible Spectrophotometry—Continued

Absorbance at various temperatures (17 to 35 °C)

$$A_t = A_{25}[1+C_A(t-25)]$$

where: A_t = Absorbance at temperature t (°C)
A_{25} = Absorbance certified at 25.0 °C
C_A = Fractional change in absorbance per °C

The values of C_A, at the four wavelengths, are given below. [NOTE: At wavelength 302 nm, absorbance decreases with increasing temperature; at the other wavelengths, absorbance increases with increasing temperature.]

Wavelength, nm	C_A
302	−0.0014
395	+0.0014
512	+0.0018
678	+0.0014

Instructions for Use

1. Select two clean 10.00 mm cuvettes free of scratches. At least one should be fitted with a ground glass or Teflon stopper to minimize evaporation. Reserve it for all sample measurements.

2. Mark each of the cuvettes to assure the same orientation in the spectrophotometer.

3. Place the cuvettes in their respective holders and fill with distilled water. (Borosilicate Pasteur-type pipettes fitted with rubber bulbs are recommended for transferring all solutions to and from the cuvettes. Soft glass pipettes, which are available commercially, contain residual amounts of ultraviolet absorbing material, but may be used after proper cleaning. Several rinses, first with isopropyl alcohol and then with distilled water, are generally adequate.)

4. Obtain the optical mismatch of the cuvettes at 302, 395, 512, and 678 nm, using the spectral bandpass limitations given on the face of the certificate.

5. Empty the cuvettes by suction without removing them from their holders, refill with distilled water and measure the absorbances again at each of the above wavelengths.

6. Repeat the emptying and refilling operation until constant absorbance readings are obtained.

7. Using the liquid filters provided, measure, in turn, the absorbances of the "Blank," "A," "B," and "C" against distilled water. Shake each ampoule before opening to remix any condensate which may have collected in the neck (the ampoules have been prescored directly below the gold band to facilitate opening).

8. Subtract the appropriate "Blank" reading from the absorbances obtained for "A," "B," and "C." These net absorbances should agree with the certified values within the uncertainties specified. Consult the manufacturer of the instrument if they do not.

The absorbances of these filters will depend not only on the accuracy of the photometric scale but also on the wavelength accuracy and the spectral bandpass. A mercury lamp is recommended for checking the wavelength scale. In addition, for those spectrophotometers having a hydrogen (H) or deuterium (D) source, the two emission lines at 486.1 and 656.3 nm (H) or 486.0 and 656.1 nm (D) may provide a convenient check at these wavelengths.

Appendix K. Standard Reference Materials for pH Available from the National Bureau of Standards

SRM	Type	pH(S) (at 25 °C)	Wt/Unit (grams)
185e	Potassium Hydrogen Phthalate	4.004	60
186Ic	Potassium Dihydrogen Phosphate	(6.863)	30
186IIc	Disodium Hydrogen Phosphate	(7.415)	30
187b	Borax	9.183	30
188	Potassium Hydrogen Tartrate	3.557	60
189	Potassium Tetroxalate	1.679	65
191	Sodium Bicarbonate	10.014	30
192	Sodium Carbonate		30
922	Tris(hydroxymethyl)aminomethane	7.699	25
923	Tris(hydroxymethyl)aminomethane Hydrochloride		35

Appendix L. Ion-selective Electrode Standard Reference Materials Available from the National Bureau of Standards

SRM No.	Name	Molality	Activity		p(cation)	p(anion)	g/unit
			Ion	a			
2201	Sodium Chloride	1.0	Na^+	0.6956	0.157		125
			Cl^-	.620		0.208	
2202	Potassium Chloride	1.0	K^+	.623	.206		160
			Cl^-	.586		.232	
2203	Potassium Fluoride	1.0	F^-	.645		.190	125

Appendix M. NBS—Clinical Standard Reference Materials

SRM	Type	Purity (mol %)	Unit
911a	Cholesterol	99.8	2g
912	Urea	99.7	25g
913	Uric Acid	99.7	10g
914	Creatinine	99.8	10g
915	Calcium Carbonate	99.9+	20g
916	Bilirubin	99.0	0.1g
917	D-Glucose	99.9	25g
918	Potassium Chloride	99.9	30g
919	Sodium Chloride	99.9	30g
920	D-Mannitol	99.8	50g
921	Cortisol	98.9	1g
922	Tris(hydroxymethyl)aminomethane	99.9	25g
923	Tris(hydroxymethyl)aminomethane HCl	99.7	35g
924	Lithium Carbonate	100.5	30g
925	VMA (4-hydroxy-3-methoxymandelic acid)	99.4	1g
926	Bovine-Serum Albumin powder	IN PREPARATION	
927	Bovine-Serum Albumin (7% solution)	IN PREPARATION	
928	Lead Nitrate	IN PREPARATION	
929	Magnesium Gluconate	IN PREPARATION	
930b	Glass Filters for Spectrophotometry	IN PREPARATION	
931a	Liquid Filters for Spectrophotometry	IN PREPARATION	
932	Quartz Cuvette for Spectrophotometry	1 each	
933	Clinical Laboratory Thermometers	Set of 3	
934	Clinical Laboratory Thermometer	1 each	

Appendix N. Priority of work on Clinical Standard Reference Materials

[1] Primary protein standard (Bovine serum albumin).
[2] Spectrophotometry liquids in UV-visible range. (Extension of SRM 931 to 300 and 240 nm.)
[3] High-purity solid materials for spectrophotometry:
  a. Potassium dichromate;
  b. Potassium hydrogen phthalate.
[4] Standard cuvette for spectrophotometry.
[5] Cyanomethemoglobin—No SRM planned. NBS will cooperate in verification of the international standard.
[6] NADH (reduced-form of nicotinamide adenine denucleotide).
[7] Sodium pyruvate.
[8] Spectrofluorimetry standard—Quinine sulfate.
[9] Ionic activity standards:
  a. pH buffers in isotonic saline;
  b. Ion-selective electrode standards Ca^{++} $CaCl_2 \cdot 2H_2O$), F^-(KF);
  c. pCO_2 and pO_2.
[10] Toxicology standards—phenobarbital, pentobarbital, secobarbital, diphenylhydantoin.
[11] Abuse drug standards—morphine, methadone.
[12] Alcohol standards.
[13] Magnesium salt.
[14] Lead in blood.
[15] Saturated triglyceride—tripalmitin.
[16] UV spectrophotometry glasses.
[17] Human albumin.
[18] Temperature standardization in the clinical laboratory.
[19] Publications relating to techniques used in the clinical laboratory.
[20] Stray light standard for spectrophotometry.
[21] Particle size standards.

NBS-114A (REV. 7-73)

U.S. DEPT. OF COMM. BIBLIOGRAPHIC DATA SHEET	1. PUBLICATION OR REPORT NO. NBS-MN 148	2. Gov't Accession No.	3. Recipient's Accession No.

4. TITLE AND SUBTITLE

Standard Reference Materials:

The Role of SRM's in Measurement Systems

5. Publication Date

January 1975

6. Performing Organization Code

7. AUTHOR(S) J.P. Cali, T.W. Mears, R.E. Michaelis, W.P. Reed, R.W. Seward, C.L. Stanley, H.T. Holken, and H.H. Ku

8. Performing Organ. Report No.

9. PERFORMING ORGANIZATION NAME AND ADDRESS

NATIONAL BUREAU OF STANDARDS
DEPARTMENT OF COMMERCE
WASHINGTON, D.C. 20234

10. Project/Task/Work Unit No.

11. Contract/Grant No.

12. Sponsoring Organization Name and Complete Address *(Street, City, State, ZIP)*

Same as Number 9.

13. Type of Report & Period Covered

Final

14. Sponsoring Agency Code

15. SUPPLEMENTARY NOTES

Library of Congress Catalog Card Number: 74-600196

16. ABSTRACT *(A 200-word or less factual summary of most significant information. If document includes a significant bibliography or literature survey, mention it here.)*

This publication is a guide to the use of Standard Reference Materials (SRM's) and should be useful to all users of SRM's, particularly those in countries developing national measurement systems. It is not intended to be an exhaustive description of the NBS-SRM program, but rather a review of the role of SRM's play in the measurement system, how SRM's are certified, and what the certification means. To illustrate the use of SRM's several selected industries are described in which SRM's have made significant contributions.

17. KEY WORDS *(six to twelve entries; alphabetical order; capitalize only the first letter of the first key word unless a proper name; separated by semicolons)* Certification; meaningful measurement; measurement; measurement system; precision; reference method; specificity; SRM; standard reference material; systematic error.

18. AVAILABILITY [X] Unlimited

[ ] For Official Distribution. Do Not Release to NTIS

[X] Order From Sup. of Doc., U.S. Government Printing Office Washington, D.C. 20402, SD Cat. No. C13.44:148

[ ] Order From National Technical Information Service (NTIS) Springfield, Virginia 22151

19. SECURITY CLASS (THIS REPORT)

UNCLASSIFIED

20. SECURITY CLASS (THIS PAGE)

UNCLASSIFIED

21. NO. OF PAGES

54

22. Price

$1.15

USCOMM-DC 29042-P74

NBS TECHNICAL PUBLICATIONS

PERIODICALS

JOURNAL OF RESEARCH reports National Bureau of Standards research and development in physics, mathematics, and chemistry. Comprehensive scientific papers give complete details of the work, including laboratory data, experimental procedures, and theoretical and mathematical analyses. Illustrated with photographs, drawings, and charts. Includes listings of other NBS papers as issued.

Published in two sections, available separately:

- **Physics and Chemistry (Section A)**

Papers of interest primarily to scientists working in these fields. This section covers a broad range of physical and chemical research, with major emphasis on standards of physical measurement, fundamental constants, and properties of matter. Issued six times a year. Annual subscription: Domestic, $17.00; Foreign, $21.25.

- **Mathematical Sciences (Section B)**

Studies and compilations designed mainly for the mathematician and theoretical physicist. Topics in mathematical statistics, theory of experiment design, numerical analysis, theoretical physics and chemistry, logical design and programming of computers and computer systems. Short numerical tables. Issued quarterly. Annual subscription: Domestic, $9.00; Foreign, $11.25.

DIMENSIONS/NBS (formerly Technical News Bulletin)—This monthly magazine is published to inform scientists, engineers, businessmen, industry, teachers, students, and consumers of the latest advances in science and technology, with primary emphasis on the work at NBS.

DIMENSIONS/NBS highlights and reviews such issues as energy research, fire protection, building technology, metric conversion, pollution abatement, health and safety, and consumer product performance. In addition, **DIMENSIONS/NBS** reports the results of Bureau programs in measurement standards and techniques, properties of matter and materials, engineering standards and services, instrumentation, and automatic data processing.

NONPERIODICALS

Monographs—Major contributions to the technical literature on various subjects related to the Bureau's scientific and technical activities.

Handbooks—Recommended codes of engineering and industrial practice (including safety codes) developed in cooperation with interested industries, professional organizations, and regulatory bodies.

Special Publications—Include proceedings of high-level national and international conferences sponsored by NBS, precision measurement and calibration volumes, NBS annual reports, and other special publications appropriate to this grouping such as wall charts and bibliographies.

Applied Mathematics Series—Mathematical tables, manuals, and studies of special interest to physicists, engineers, chemists, biologists, mathematicians, computer programmers, and others engaged in scientific and technical work.

National Standard Reference Data Series—Provides quantitative data on the physical and chemical properties of materials, compiled from the world's literature and critically evaluated. Developed under a world-wide program coordinated by NBS. Program under authority of National Standard Data Act (Public Law 90-396).

Building Science Series—Disseminates technical information developed at the Bureau on building materials, components, systems, and whole structures. The series presents research results, test methods, and performance criteria related to the structural and environmental functions and the durability and safety characteristics of building elements and systems.

Technical Notes—Studies or reports which are complete in themselves but restrictive in their treatment of a subject. Analogous to monographs but not so comprehensive in scope or definitive in treatment of the subject area. Often serve as a vehicle for final reports of work performed at NBS under the sponsorship of other government agencies.

Voluntary Product Standards—Developed under procedures published by the Department of Commerce in Part 10, Title 15, of the Code of Federal Regulations. The purpose of the standards is to establish nationally recognized requirements for products, and to provide all concerned interests with a basis for common understanding of the characteristics of the products. The National Bureau of Standards administers the Voluntary Product Standards program as a supplement to the activities of the private sector standardizing organizations.

Federal Information Processing Standards Publications (FIPS PUBS)—Publications in this series collectively constitute the Federal Information Processing Standards Register. The purpose of the Register is to serve as the official source of information in the Federal Government regarding standards issued by NBS pursuant to the Federal Property and Administrative Services Act of 1949 as amended, Public Law 89-306 (79 Stat. 1127), and as implemented by Executive Order 11717 (38 FR 12315, dated May 11, 1973) and Part 6 of Title 15 CFR (Code of Federal Regulations). FIPS PUBS will include approved Federal information processing standards information of general interest, and a complete index of relevant standards publications.

Consumer Information Series—Practical information, based on NBS research and experience, covering areas of interest to the consumer. Easily understandable language and illustrations provide useful background knowledge for shopping in today's technological marketplace.

NBS Interagency Reports—A special series of interim or final reports on work performed by NBS for outside sponsors (both government and non-government). In general, initial distribution is handled by the sponsor; public distribution is by the National Technical Information Service (Springfield, Va. 22151) in paper copy or microfiche form.

Order NBS publications (except Bibliographic Subscription Services) from: Superintendent of Documents, Government Printing Office, Washington, D.C. 20402.

BIBLIOGRAPHIC SUBSCRIPTION SERVICES

The following current-awareness and literature-survey bibliographies are issued periodically by the Bureau:

Cryogenic Data Center Current Awareness Service (Publications and Reports of Interest in Cryogenics). A literature survey issued weekly. Annual subscription: Domestic, $20.00; foreign, $25.00.

Liquefied Natural Gas. A literature survey issued quarterly. Annual subscription: $20.00.

Superconducting Devices and Materials. A literature survey issued quarterly. Annual subscription: $20.00. Send subscription orders and remittances for the preceding bibliographic services to the U.S. Department of Commerce, National Technical Information Service, Springfield, Va. 22151.

Electromagnetic Metrology Current Awareness Service (Abstracts of Selected Articles on Measurement Techniques and Standards of Electromagnetic Quantities from D-C to Millimeter-Wave Frequencies). Issued monthly. Annual subscription: $100.00 (Special rates for multi-subscriptions). Send subscription order and remittance to the Electromagnetic Metrology Information Center, Electromagnetics Division, National Bureau of Standards, Boulder, Colo. 80302.