CONCRETE SHELL HEAT EXCHANGER PROTECTIVE COATINGS

Iqbal Rashid

May 73

ABSTRACT

Protective coatings applied on concrete substrates might blister under vacuum. It has been anticipated that coatings applied on the inside of concrete surfaces of steam condensers might blister when there is a vacuum (28.5 in of Hg) on the inside. A variety of coatings have been tested to see when blistering is a problem.

Different coatings have been put through a vacuum test and some good results have been obtained. Two types of coating system applications can be identified: (a) ones which form tough, tenacious and solid surface films on concrete surface and (b) breather films which act more like semi-permeable membranes. Epoxies, silicone rubbers, butyl rubbers belong to the former group while acrylic resins, styrene-butacdiene compounds and silicone resin belong to the latter. Chlorinated rubbers and ordinary roof cement, both blister when put under vacuum.

It has also been identified that part of the blistering problem can be evaded by using proper concrete and concrete surface preparation techniques. Therefore, coatings (applications to concrete surfaces) have been found and tested such that they will not blister under high vacuum environmental exposure.

INTRODUCTION

Most if not all, undervdeveloped countries do not posses either the materials or the technical expertise in connection with iron or steal technology, with regards to projects which require hugh iron and steel structural components. These countries then have to resort to imports which involves large sums of foreign exchange. It is proposed that in order to circumvent the heavy cost factor due to iron/steel, a materials substitution plan for cost reduction purposes be investigated. Most of the underdeveloped countries do possess materials and to some extent technical ability regarding concrete technology. The focus of interest of this project is to evaluate the technical feasibility of substituting concrete or ferrocement in place of steel for heat exchanger shells in power plants. This may involve the shell itself, the end casings or other structural supports: concrete however would only replace the containment components of the heat exchanger shell.

Each new unusual application brings with it a set of problems. The heat exchanger shell for power plants, made out of concrete is no exception. In the shell design there will be steam at the outlet of the turbine(100-150°F and 28.5 Hg vacuum) coming into the condenser which after undergoing heat exchange becomes condensate which is pumped back to the boiler into the power generation cycle. If this containment for the steam were to be made out of concrete, would there be any problems associated with the concrete-containment substrate being exposed to the steam? The one that can be very damaging to concrete is Pure Water Corrosion.

Pure Water Corrosion

Portland cement concrete is corroded in certain structures, such as pipelines, where large volumes of pure or soft water flow for long periods.(1)

The severity of attack is related to the quality both of the water and the concrete. It may be of a low order with best quality concrete. Desalinated waters in pure form are particularly aggressive. As a first step toward disintegration, calcium hydroxide is removed in solution, this material being more soluble in cold water than in warm. If the water contains free carbon dioxide, its aggressiveness is further increased and both calcium hydroxide and calcium carbonate go into the solution in the form of calcium bicarbonate.

In additon, the hydrated calcium silicates in set portland cement are stable only in contact with an alkaline solution, so that if calcium hydroxide which is present in solid cement is removed, the silicates are decomposed with a liberation of calcium hydroxide which in turn is removed. In this way reactions can continue until most of the hydrated silicates are decomposed and the leaching action can be advanced to a stage where no cementatious material remains to bind the aggregate together.

The ph value of water is a measure of its aggressiveness and must be considered in relation to its hardness and the content of free carbon dioxide. Thus, soft water with a ph value of over 7 can be aggressive if its temporary hardness (which is removable by boiling) is negligible i.e. below 10 parts of calcium and magnesium carbonate (present is bicarbonates) for million of water. On the other hand, if the temporary hardness is below 50 ppm, serious corrosion is unlikely to take place if the ph value is as low as 5. If the temporary hardness is below 10 ppm corrosion can be serious, even if the content of free CO_2 is negligible. In order to inhibit corrosion, surface applications on concrete substrate have to be incorporated. Materials used as surface treatments for concrete may be classified as those which penetrate the surface of the concrete and produce a lining on the pores or those which form tough surface films and fill the pores completely.

Some work has been done by the OSW [2] on surface treatment for concrete exposed to water at varying conditions. These surface treatments are basically in the form of protective coatings applied onto the concrete.

The application of a coating on the inside surface of concrete heat exchanger shells presents a new problem. The pressure differential due to ambient atmosphere on the outside and the high vacuum (steam) on the inside of the heat exchanger shell provides a driving potential for any air or moisture present in the concrete. This entrapped air then works against the integrity of the coating and eventually might blister it. The blister in time gives way and exposes the pure water to the concrete which has to be avoided. Water repellency tests of coatings are unnecessary since data to the same order could be obtained from the OSW [2]. The blistering problem of the coatings, however will be tested.

OBJECTIVES

It has been identified that due to the application of protective coatings on the inner surface of the concrete heat exchanger whell the problem of the blistering of the coating might arise (due to the pressure differential). Any surface application on the concrete must therefore ensure the following:

a) a protective coating on the concrete surface which inhibits steam exposure to concrete and

b) that this protective coating does not blister, due to pressure differential (Fig.1) + (Fig.2).

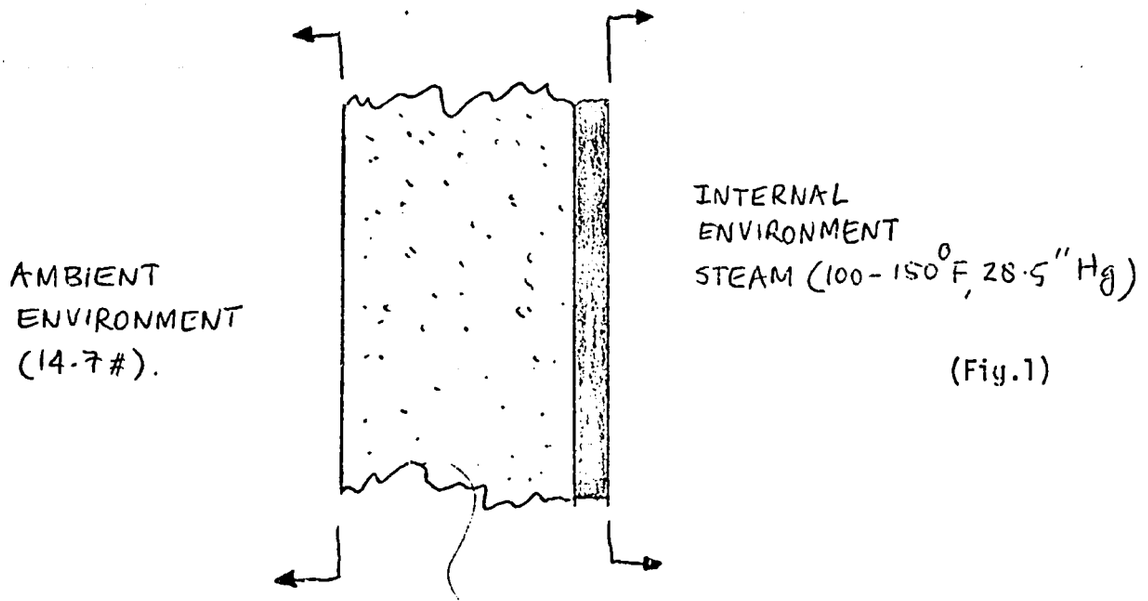
AMBIENT
ENVIRONMENT
(14.7#).
INTERNAL
ENVIRONMENT
STEAM (100-150°F, 28.5" Hg)
CONCRETE HX-SHELL

(Fig.1)

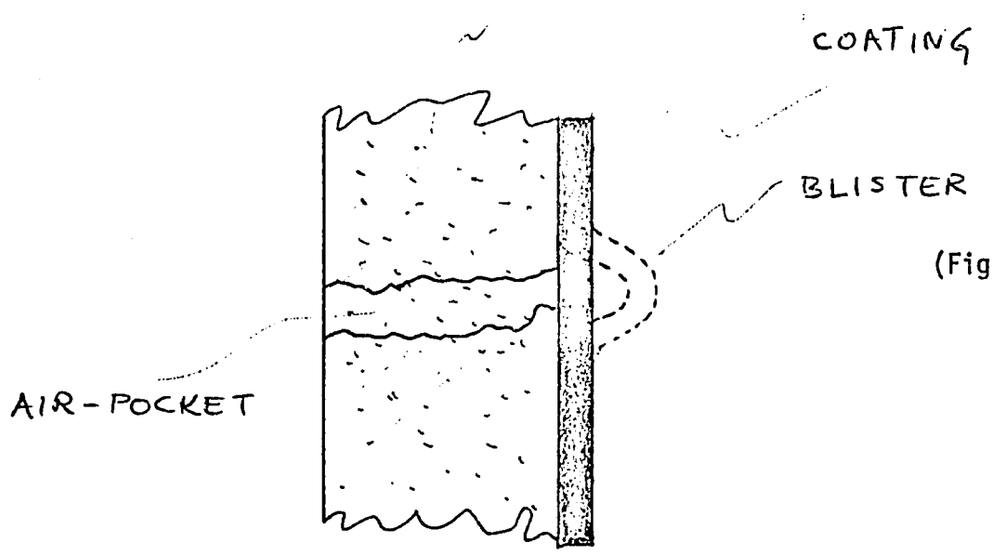
COATING
BLISTER
AIR-POCKET

(Fig.2)

METHODOLOGY

Blistering process can be avoided by either making the concrete air and/or moisture tight or with the application of a coating which will not blister or with a combination of the two. In the next chapter, the concrete mixture and surface preparation necessary in order to make the concrete sufficiently air tight will be discussed. In the last chapter the specific qualities of commercial coatings will be looked upon - essentially coatings which will not blister.

Sample and Apparatus

Actual samples were prepared and put to the vacuum test in order to observe which coatings will not blister. The concrete specimen was 3" dia by 3" long. The apparatus was arranged as shown in the following figure.

Fig.3: Vacuum Test Schematic

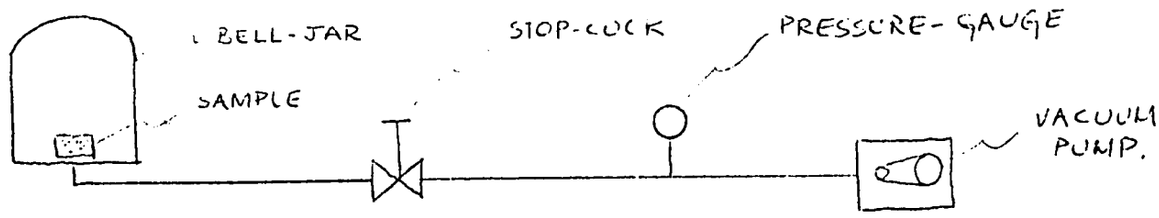

The vacuum pump is capable of pulling down pressure in the bell-jar chamber from ambient pressure to 29" Hg (vacuum) in 45 seconds.

The actual test will proceed in the following manner:

a. The prepared sample with a coating was placed into the bell jar.

b. The stop cock valve was opened.

c. The vacuum pump was turned on and the pressure drop noted. When gage reads 29" Hg vacuum the pump was stopped.

d. The vacuum was released and the sample taken out.

e. Blisters were looked for.

Experimental Work

The blistering process would not even start if the concrete containment wall could be made air/moisture tightand absolutely impervious to the passage of air through concrete. This is difficult to achieve however. The concrete can be prepared in the following manner so that the ideal conditions are approached.

Concrete Mix

Portland cement is the most important masonary material used in modern construction. Its numerous advantages make it one of the most economical, versatile and universally used construction materials available. A concrete structure, either plain or reinforced, is almost unique among the many systems of modern construction. In its plastic state concrete can be readily handled and placed in forms and cast into any desired shape.

A plastic concrete is a concrete mix that is readily molded, yet changes its shape slowly if the mold is immediatedly removed. The degree of plasticity influences the quality and character of the finished product.

a. Workability - this property indicates relative ease or difficulty of placing and consolidating concrete in the form.

b. Nonsegregation - a plastic concrete should be handled so that there will be a minimum of segregation and the mix will remain homogenous.

c. Uniformite - uniform quality of the hardened concrete is desirable from both economic and strength considerations.

Hardened concrete in its finished form is the actual basis of any concrete design. The essential qualities which must be considered are:

a. Strength - strength is the ability of the concret to resist a load in composition, flexure or shear. The principal influencing factor on strength is the ratio of water to cement.

b. Durability - is the ability of the hardened mass to resist effects of the elements,such as wind, frost or snow, chemical reaction etc. Air-entraining cements produce concretes with improved durability.

c. Water-tightness - this is an essential requirement of the concrete.

Keeping in mind the above mentioned requirements for successful concrete application, the following ingredients were mixed for the concrete sample.

1. Portland ASTM Type 1 cement.

2. Tap Water - purpose of which is to start the hydration process, coat the aggregate and permit the mix to be worked.

3. Aggregates - consisting of clean, hard,strong, desirable particle free of chemicals or coatings of clay or other fine materials that affect the bond of the cement paste. The aggregate comprised of regular sand, gravel and crushed stone.

4. Admixture - Air-entraining darex : an aqueous solution of highly purified and modified salts of sulfonated hydrocarbon. Unlike air entrapped in non-air-entrained concrete which exists in the form of relatively large air voids which are not dispersed uniformly throughout the mix with the use of darex the entrained air exists in the form of minute disconnected bubbles well dispersed throughout the mass. Air-entrained concrete possesses advantages such as improved workability, freeze-thaw resistance, sulfate resistance and water tightness.

The samples prepared were of the following proportions by weight.

	Parts
cement	2.5
sand	7.5
water	1.5

Admixture was proportioned as 9 c.c for 94 lbs of cement. The sample was wet cured for 7 days and dry cured for 21 days. Some surface preparation was applied to all samples.

Surface Preparation

Surfaces of concrete substrates have to be treated such that protective treatments can be applied. Surfaces can also be treated such that complete air tightness, at the surface is achieved. Besides the requirements for maintaining structurally sound and strong concrete, there are four basic problems that arise from painting concrete surfaces.

1. Free moisture within the concrete remaining from the original mixing and curing.
2. The presence of soluble alkaline substance that are brought to the surface by outward movement of moisture and deposited as efflorescence.
3. Smooth glazed areas resulting from casting against a non-absorbant form; or laitence (a weak surface deposit resulting from excessive trowelling or vibration during pouring).
4. Possible contamination with form oil or concrete curing compounds.

The following steps were taken to prepare the concrete samples for coatings.

1) Acid etched: Dilute solution of muriatic acid was spread on the surface. As soon as bubbling ceased the sample was flushed with water.

2) Re-entrant holes were removed by steel wool. Sandblasted surfaces, however will provide a rougher surface and better cleaning.

Any holes bigger than 1/16" should be filled with fillers or the surface be given a sack-rub finish or else silicon retrafluoride gas treatment (ocration).

Protective Coatings

The successful application of paintable surfaces submerged in water depends upon the proper combination of:

1. Type of surface
2. Age of surface
3. Chemistry of surface
4. Chemistry of water
5. Water velocity and wave action
6. Surface preparation
7. Temperature of water and/or surface

The vacuum test is necessary because knowledge about prior tests of this nature could not be found in literature. It is not very difficult to identify two different kinds of coating applications which will not blister under vacuum conditions.

1) Coating applications which are breathing.

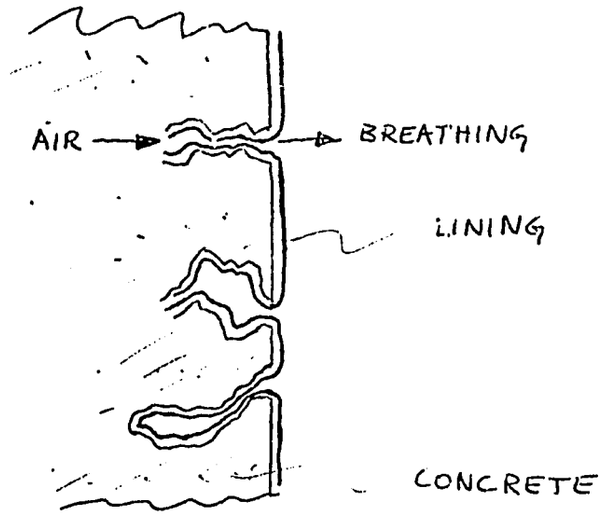

(Fig.4)

2) Coatings which form a tough tenacious wall which will not strain under the pressure differential across the coating.

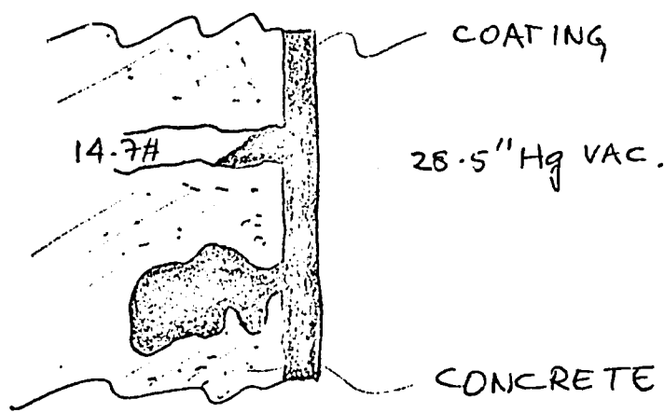

(Fig.5)

The following are the various classes of coatings (by material) and the conditions under which they are best suited for application.[Ref.8]

ALYKYDS

Formed by esterification of polyhydric alcohol (glycerol) and a polybasic acid (phthalic acid) modified with a dryin oil. Hardens by solvent evaporation and oxidation. Good resistance to atmospheric weathering but not resistant to chemical splash and spillage. Also not suitable for application over alkaline surfaces. Temperature resistance 225°F. $4.00-8.00/gal.

VINYLS

Polyvinyl chloride - polyvinyl acetate co-polymer dissolved in strong polar solvent, generally a ketone. Coating hardens by solvent evaporation. Resistance to water and salt solutions. Initial adhesion is poor. Pinholes in dried films more prevalent than other types. Relatively low thickness per cost (1.5-2.0 mils) $6.00-9.00/gal.

CHLORINATED RUBBERS

Formed by adding chlorine to unsaturated isoprene units. Hardens by solvent evaporation, low moisture permeability and excellent resistance to water. Degraded by heat (200°F dry and 140°F wet), but can be stabilized to improve these properties. $6.50-9.50/gal.

EPOXY, AMINE CURED

Reaction of active hydrogens of aliphatic amines with epoxy groups of bis-phenol-A epichlorhydrin resin. Coating hardens by solvent evaporation and cures by cross linking. Excellent resistance to water. Harder and less flexible than other epoxies. Temperature resistance 225°F dry and 190°F wet. Maximum properties require about 7 days to cure. $9.00-13.00/gal.

EPOXY, POLYAMIDE CURED

Reactive polyamide resins combined with epoxide groups in the epoxy resin. Coating hardens by solvent evaporation but cures by cross linking. Superior water resistance and excellent adhesion. Temperature resistance 225°F dry and 150°F wet. Cures for 7 days at 70°F. $7.00 to $12.00/gal.

EPOXY, ESTER

Formed by reaction between epoxy resin and unsaturated fatty acids. Coating hardened by solvent evapoartion and oxidation. Least resistant of epoxy family. Usually sufficient to resist normal atmospheric corrosive attack. Temperature resistance 225°F dry. Easy to apply.

EPOXY, COAL TAR

Coal tar mixed with epoxy resin and cured using either amine or a polyamide. Coating hardens and cures by crodd linking. Excellent resistance to fresh water immersion. Temperature resistance 220°F dry and 150°F wet. Low cost per unit coverage $6.50 to 8.50/gal.

LATEX

Latex resins (styrene - butadiene, polyvinyl acetates, acrylic or blends) are emulsified in a water vehicle. After application the water evaporates and the resin particles coalesce and sinter to form the coating. Excellent resistance to water. Ease of application. Good concrete and masonary sealers because breathing film allows passage of water vapor. $5.00-8.00/gal.

Polyesters

An unsaturated polyester is further reacted with diallyl phthalate to cross link and harden. Excellent resistance to water. Good adhesive and cohesive strength - very short pot life. $9.00 to $13.00/gal.

SILICONE

Composed of the siloxane bond with various organic side chains. As a water repellent, resinous silicones in hydrocarbon solvents are used on masonary, silicone products on penetrating concrete deposit a water repellent lining in the exterior pores or capillaries. Forms a "breathing film" cost $5.00 - 8.00/gal. With alminum pigments added it can stand 1000°F temperatures.

Ref.[9] has an extensive catalogue of addresses of manufacturers for the above castings.

The OSW [2] conducted tests of coatings applied on concrete under various conditions of water/steam temperature exposures. They have had good results with the following type of coatings:
neoprene, epoxy-phenolic, vinyl, coal tar epoxy, phenolic, chlorinated polyether, epoxy, polyvinyl fluoride, polyvinylidene fluoride, Butyl rubbers. Keeping in mind the results of these coatings, the following coatings were selected for the vacuum test:

Table 1

COATING	DOES IT BLISTER?
Plasite No.7155/Epoxy Phenolic	
Tarset/Coal Tar Epoxy	
Colma-Kota M/Epoxy-Resin-Based	no
Eccomold L28/Epoxy-Resin	no
Cadipox/Epoxy-Polyamine	no
Primerce/Epoxy Polyamide	no
Acri-Seal/Acrylic Resin	no
Thompsons Water Seal	no
Magic Kote/Styrene-Acrylic Compound	no
Daracone/Silicone Water Repellent	no

Krylac/Vinyl-Acrylic + Block Primer	no
Super-Por, Seal/Silicone resin	no
Parlon/Chlorinate Rubber	no
Endcor/Chlorinated Rubber	yes
G.E. Silicone Rubber	no
Enjau Butyl LM 450/Butyl Rubber	no
Bitumastic/Koppers	yes
Roof cement	yes

In the following pages a full description of the coatings, in the same S/No. order as in Table 1, and the results are described.

1) Product: Epoxy-Phenolic Plastic No.7155

Address: Wisconsin Protective Coating Corp.
Technical Bulletin M-7
Millmar Associates
9A St. Burlington, Mass.
Mr. Joe Bolger Tel: 935-6260

Application & Results

Plasite no.7155 is a high resistant heavy build protective coating. It is a water resistant phenolic coating cross linked with epoxy resin and polymerized with an alkaline type curing agent. Ref.[10] depicts excellent results of this coating in a high purity water environment.

2) Product: Coal-Tar Epoxy Tarset

Address: Porter Coatings Tarset Group
Peter Kahn & Co.
32 Berkshire Road
Newton, Mass.
Mr. Peter A. Jahn Tel: 244-8158

Application & Results

Coal Tar epoxies behave well when exposed to high-purity water under varying temperature condition [2].

Product: Sika Chemical

Address: A.H. Harris & Son, Inc.
Hyde Park, Mass. 02136
Mr. William D. Liddell Tel: 364-2234

Application & Results

Colma Kote-M is a two component 100% solids epoxy-resin based high build coating. It protects dry, damp, wet and underwater concrete from corrosin and deterioration. It forms a vapor barrier.

Colma Kote-M was brush applied. It did not blister when under vacuum. Its easy to apply although it contains aklaline amines and proper caution is necessary. Holes bigger than 1/16" may first be filled with epoxy grout.Ref.[1] discusses how the wet-concrete problem is solved by this coating.

4) Product: Epoxy Resin/Eccomold L28

Address: Emerson & Cummings Inc.
Canton, Mass.
Mr. John Adams Tel: 828-3700

Application & Results

Eccomold L28 is a general purpose epoxy laminating resin. With the use of catalyst 9 it can be room cured and produces laminates of high strength. It has reasonable ease of brush application and forms a thick hard film on the concret surface. It also fills the holes with no initial filling required. It does not blister, under vacuum.

5) Product: Polyamine Cured Epoxy Rsin/Cadipox Enamel 100 Series

Address: Cadillac Paint & Varnish Co.
156 Western Avenue
Boston, Mass.
Mr. John O'Hare Tel: 254-0335

Application & Results

Cadipox - Enamel is a polyamine cured two pack, pure epoxy resin system of high molecular weigth, designed to give hard wearing, chemically resistant coatings of high gloss and good color. It was brush applied with proper sample preparation. Fills up the holes on the concrete surface and forms a thick surface film. It does not blister under vacuum.

6) Product: Epoxy Polyamide/Primer CE

Address: Water-Proofing Company
119 Chandler St.
Boston, Mass.
Mr. Peter Nota Tel: 536-4204

Application & Results

Primer CE is a general purpose epoxy polyamide. In comparison with the other epoxies, the primer CE is relatively easy to handle and apply. It forms a tough surface film on the concrete surface. It does not blister when put under vacuum test.

7) Product: Acrylic Resin / Acri-Seal "S"

Address: Water-Proofing Company
119 Chandler St.
Boston, Mass.
Mr. Peter Nota Tel: 536-4204

Application & Results

Acri-Seal "S" is a clear colorless special blend of highly polymerized acylic resins, in aromatic solvents. Acri-Seal also comes as a water base. Properly prepared samples were dipped into coatings. They form transparent coatings and compared to the epoxies form negligibly thin films. The solvent base and the water base Acri-Seal coatings did not blister.

8) Product: Polmerized - Copolycarvitol / Thompson's Water Seal

Address: E.A. Thompson Co. Inc.
Mr. William D. Liddell Tel: 364-2234

Application & Results

Thompson's water seal is a clear dolution of polymerized organic and inorganic solids, carried in a low aromatic, high aniline solvent blend. It penetrates into the concrete surface carrying solids right

into the pores where expansion takes place. This action literally "corks-up" the pores deep into the material being treated. The sample was dipped and dye was added to impart color to the transparent fluid. It does not blister under vacuum.

9) Product: Styrene-Acrylic Compound / Magic Kote.

Address: Symons Manufacturing Co.
188 Providence St.
Hyde Park, Mass.
Mr. William H. Liddell Tel: 364-2234

Application & Results

Magic Kote cure and seal is a scientific compound that locks in the moisture while allowing the concrete to breathe. This is s styrene-acrylic compound with no fillers oils, waxes or chlorinated resins. Properly prepared samples were soaked with this coating. It does not blister under vacuum.

10) Product: Silicone Water Repellent Dara Cone

Address: W.R. Grace & Co.
188 Providence St.
Hyde Park, Mass.
Mr. W.D. Liddell Tel: 364-2234

Application & Results

Daracone is a solution of not less than 5% by weigth non-volatile silicone resin solids in a special penetrating type solvent. It contains no fillers. The samples were flooded such that deep penetration is achieved. As the solvents volatilize, the silicone forms a water repellent lining on the interior of each pore. This lining robs the water of its capillary action and prevents moisture from entering through the masonary. If moisture is already present inside the structure, the

plugged pores permit breathing. This coating does not blister under vacuum.

11) Product: Vinyl-Acrylic Latex / Krylac Masonary Finish

Address: Kyanize
Evrett, Mass. Tel: 387-5000

Application & Results

Krylac Masonary finish is a vinyl-acrylic latex emulsion formulated to provide high resistance to alkali and forms a special "Breather-type" film that won't blister, crack or peel. Samples were first treated with a coat of kynize block primer to fill holes. Then coats of Krylac were first thinly applied with a final thick coat. Easy to apply. It does not blister under vacuum test.

12) Product: Silicone Resin / Super-Por-Seal (with silicone)

Address: Celanese-DE-VO-KO
888 Providenc Highway
Dedham, Mass Tel: 326-6417

Application & Results

Super-por-seal is a modified silicone resin. It prevents efflorescence or "leaking" out of lime salts. Properly prepared samples were flooded with the coating. No surface film if formed. Dye was added to give color. It does not blister under vacuum.

13) Product: Chlorinated Rubber / Parlon/Clorafin

Address: Hercules
Coatings & Speciality Products
1330 Boylston St.
Chestnut Hill, Boston
Mr. J.E. Upham Tel: 731-2650

Application & Results

Parlon chlorinated rubber, a versatile film forming polymer, originally in powder form is mixed with clorafin, the plasticizer in proper proportions and is then mixed with Toluene (reagent). The mixture is then applied on to the concrete sample. This coating application does not blister under vacuum.

14) Product: Chlorinate Rubber / Endcor

Address: Dampney
85 Paris
Evrett, Mass.
Mr. Ron Child Tel: 389-2805

Application & Results

Endcor chlorinated rubber topcoat forms a chemical resistant sealer coat on concrete. It has to be thinned for the initial coats. It forms thin surface films. This coating blisters under vacuum.

15) Product: Silicone Rubber/GE-Silicone-Rubber

Address: G.E.
Refractors & Building Spec. Inc.
Cambridge, Mass.
Mr. Penny Tel: 864-1111 or 1215

Application & Results

GE silicone weather topping is a new, economical weather-proofing providing excellent protection. The sample was first applied with a primer (S.C.P. 3150) and then with the silicone rubber coating. Silicones are neither organic nor inorganic. The primer provides good adhesion to the silicone rubber. A fexible but hard surface film is formed. This coating application does not blister under vacuum.

16) Product: Butyl LM / Enjay Butyl LM 430

Address: Enjay Chemical Co.
1330 Boylston St.
Chestnut Hill, Mass.
Mr. Charles Hull Tel: 734-7600

Application & Results

The butyl LM coatings provide outstanding low water vapor and gas permeability when applied on concrete surfaces. The coating is mixed with lead peroxide curative and hydrocarbon solvent to be ready for application. Surface films are formed. This coating does not blister under vacuum.

17) Product: Bitumastic / Bitumastic Concrete Penetrant

Address: Koppers Protective Coatings
49 Needham St.
Newton Highlands, Mass.
Mr. Frank Layton Tel: 527-5165

Application & Results

This coating is very toxic and brings discomfort in application. It generally cracks and peels and therefore not a suitable coating application.

CONCLUSIONS

A variety of coatings have been tested and it has been found that most of them will not blister due to the vacuum. Most of these applications form either tough, thick surface films on the concrete or produce a lining on the surface and does not plug the pores in the concrete.

Epoxies and Butyl Rubber form tough films whereas the silicone resins and styrene acrylic compounds form linings. The OSW [2] report gives extensive results on the former type of coatings under exposure to water/steam of different temperatures. Since, the latter type of coatings are more easily handled than the epoxies it is suggested that these coatings be used.

1) Taylor, W.H., Concrete Technology and Practice, 3rd edition, 1969 Agnus and Robertson, p.275

2) Evaluation of Concrete and Related Materials for Desalination Plants OSW R & D Progress Report No. 345

3) Mr. O.J. O'Neil, Civil Engineering Department MIT, Personal Communication

4) Design and Control of Concrete Mixtures, 11th edition. Portland Cement Assoc - Eng. Bull.

5) Concrete and Masonary - Technical Manual TM 6-742 HQ- Dept of the Army, June, 1970

6) Whitener, Jack R., Ferro-Cement Boat Construction, Cornell Martime Press, Inc., 1971.

7) et. al 1. pg.315

8) Tator, K.B., "Protective Coatings" Chemical Engineering Dec. 4, 1972 pg.75

9) et. al 6. pg.74

10) Singleton, W.T., Power Industry Plasite Agents Meeting March 12-13, 1965, Green Bay Wisconsin. Master Book Section V-14A.

11) Sika News Spring , 1972 pg.10 Sika Chemical Corp., Wyndhurst, N.J.

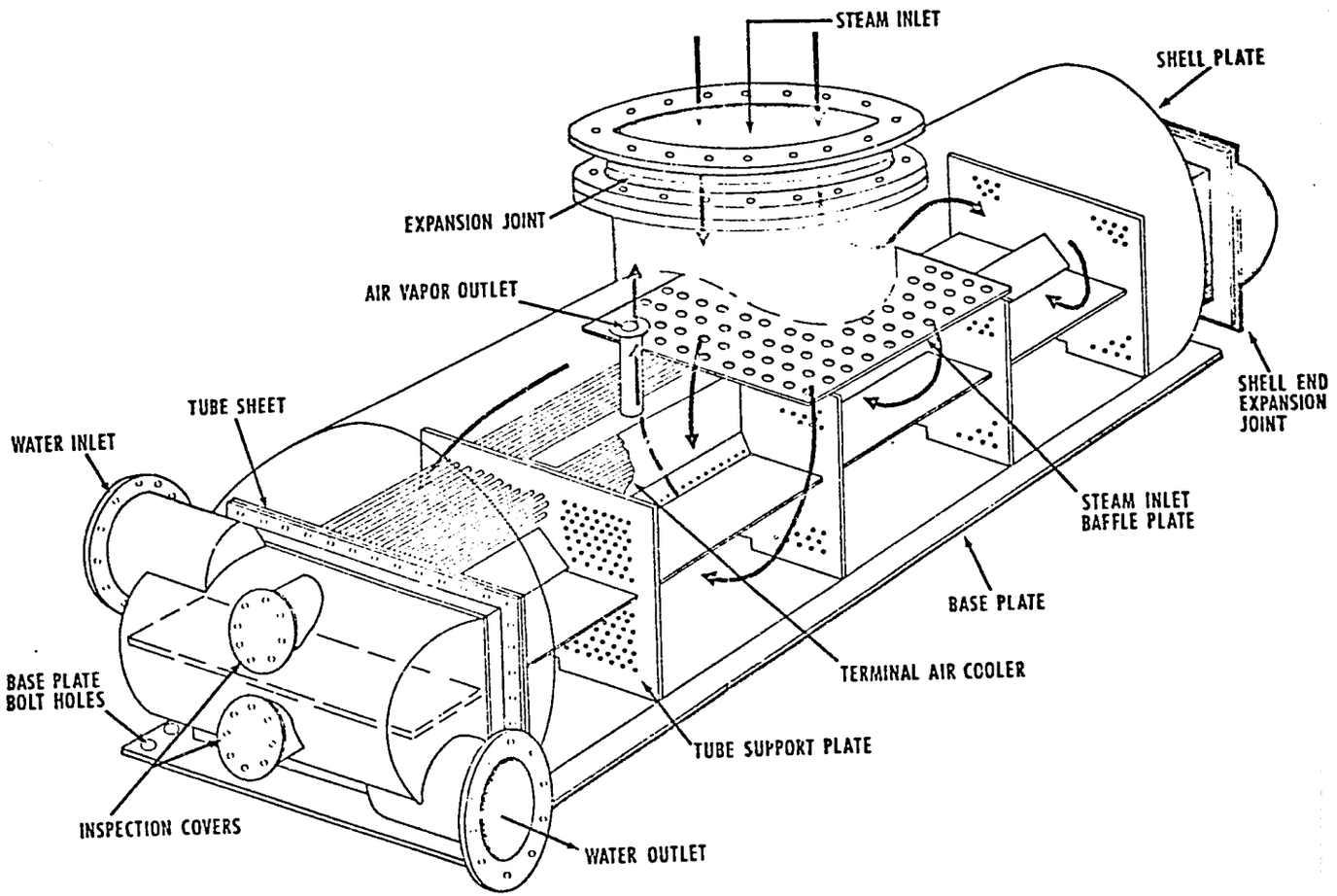
STEAM INLET
SHELL PLATE
EXPANSION JOINT
AIR VAPOR OUTLET
SHELL END EXPANSION JOINT
TUBE SHEET
WATER INLET
STEAM INLET BAFFLE PLATE
BASE PLATE
TERMINAL AIR COOLER
BASE PLATE BOLT HOLES
TUBE SUPPORT PLATE
INSPECTION COVERS
WATER OUTLET

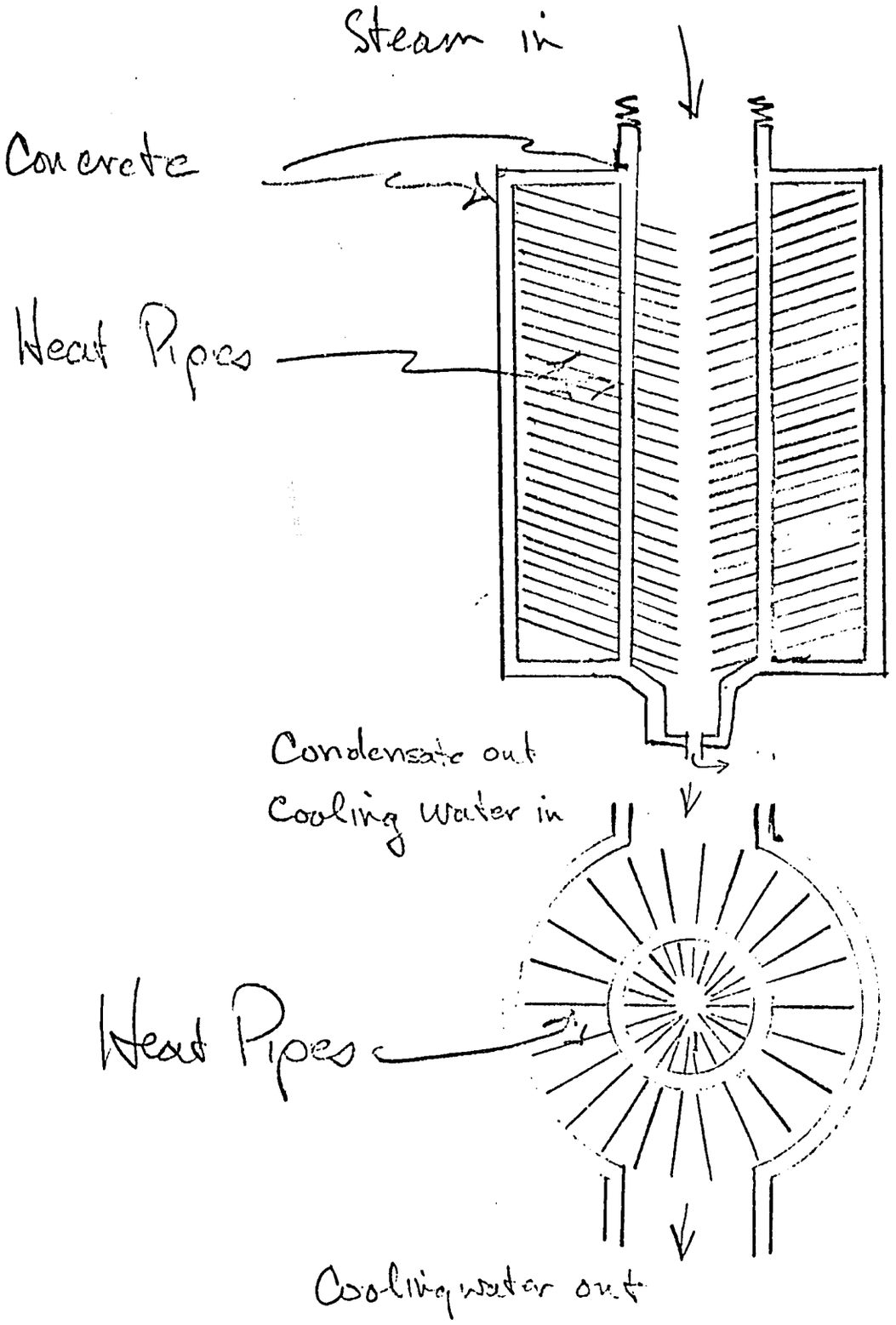

Concrete Shell Steam Condenser