A STUDY ON FERRO-CEMENT :
THEORIES, PROPERTIES AND APPLICATIONS

BY

CARLOS RAMON VARELA

Submitted in Partial Fulfillment
of the Requirements for the
Degree of Bachelor of Science
at the

MASSACHUSETTS INSTITUTE OF TECHNOLOGY

December, 1972

Signature of the Author .....
Department of Mechanical Engineering

Certified by .....
Thesis Supervisor

Accepted by .....
Chairman, Departamental Committee on Theses

ABSTRACT

A literature review on the characteristics of ferro-cement is undertaken. A description of the material is given with an outline of existing theories on its behavior. The engineering properties are examined with emphasis on explanation of the physical phenomena and methods of analysis of mechanical behavior.

Topics in which no work in ferro-cement has been done, but which are considered important for the future application of this material to mechanical systems, are also covered.

Mention is made of fiber type reinforcement of concrete; methods for fast curing and quality control are discussed.

CONTENTS

Title Page			1
Abstract			2
Contents			3
List of Figures			5
Chapter I		Introduction	6
	I.1	History	7
	I.2	Ferro-cement	8
	I.3	Theoretical Approach	10
Chapter II		Mechanical Properties	19
	II.1	Tensile Tests on Ferro-cement	19
	II.2	Ultimate Strenght and Elongation	25
	II.3	Analysis of Ferro-cement in Bending	26
	II.4	Shear in Ferro-cement	30
	II.5	Fatigue Tests on Ferro-cement	35
	II.6	Modulus of Elasticity	40
Chapter III		Surface Phenomena	42
	III.1	Corrosion	42
	III.2	Abrasion	46
	III.3	Abrasion of Hydraulic Structures (Cavitation)	48
Chapter IV		Mortar	49
	IV.1	Mortar Composition	49
	IV.2	Curing of Concrete	51

Chapter V	Other Considerations	57
V.1	Cost	57
V.2	Mortar Reinforced with Random Steel Fibers	59
V.3	Future Work in Ferro-cement	61
References		64
Appendix A	Determination of Specific Surface of Reinforcement and of Fraction Volume of Reinforcement	68
Appendix B	Methos of Analysis of Ferro-cement	70
Appendix C	Tabulation of Selected Reported Data Table I : Reinforcement Parameters Table II: Tensional Properties Table III: Properties in Flexure Table IV : Shear Properties	83

LIST OF FIGURES

Figure		Page
1	Showing Mesh Weaving Angle	10
2	Effect of Spacing of Reinforcement on Cracking Strenght of Concrete (Ref. 3)	15
3	Stress at First Crack vs. Specific Surface of Reinforcement	18
4	Typical Stress Strain Curve for Ferro-cement in Tension	20
5	Section of Reinforced Beam	23
6	Ultimate Load of Composite vs. Ultimate Capacity of Reinforcement (Ref. 1)	25a
7	Elongation at Failure vs. Specific Surface of Reinforcement (Ref. 1)	25b
8	Diagram of Beam in Bending	27
9	Direction of Shear Stresses	30
10	Shear Test Apparatus	32
11	Shear Strenght vs. Angle of Shear (Ref. 14)	33
A.1	Section of a Beam	68
B.1	(a) Original Beam (b) Equivalent Beam	71
B.2	Direction of Principal Axis Relative to Beam	72
B.3	Transformed Beam Showing Areas of Con-crete Added and their Location	73
B.4	Cross-section of Beam Used for Example	78

CHAPTER I

INTRODUCTION

Concrete is among the oldest engineering materials used by man, and ranks today among the most widely used, especially in the construction industry. It consists of a mixture of Portland cement, sand, gravel and water.

In this investigation we try to find further applications of this material, the feasibility of substituting concrete for metals and other engineering materials in fabrication of machinery for industrial use. This idea is particularly attractive in countries with a lesser degree of industrial development due to the fact that most of these countries lack the necessary technology or even the raw materials for a successful industrialization of metals, while Portland cement is often plentiful and locally produced. Also, these countries seek more labour intensive techniques of manufacture. The moulding of metals can be done today in big foundries which are highly automated, having a very high capital to labour ratio, while the moulding of concrete still requires relatively more labour.

Concrete has many desireable properties such as the low cost of construction and maintenance, high compressive strength, chemical stability, good durability, good abrasion properties; it is easy to mould in the unhardened state and can be made into almost any shape. Cement is weak in other mechanical properties, most remarkably in tensile strength. As a typical brittle material its tensile strength is about eight to ten times smaller than its compressive strength. To overcome this defficiency,

concrete has been reinforced in various manners. For many applications, especially in the construction industry, steel rods are incorporated into the mortar. Concrete thus behaves as an uncoupled material and not as a composite in the sense that the steel rods carry virtually all of the tensile stresses while the concrete carries the compressive ones. In a typical composite material the presence of one phase enhances the behavior of the other, and vice-versa.

Attempts have been made to make of reinforced concrete a composite material; this was done by incorporating into the mortar various kinds of fibers such as glass fibers, asbestos fibers, short steel fibers and others, or by increasing the distribution of continuous reinforcement employing thin wire meshes instead of steel rods. The latter is named ferro-cement and has been used originally in the construction of vessel hulls.

I. 1. History

Ferro-cement was first used around 1850 by Joseph Louis Lambot who considered himself as the inventor of this composite. He used it for the construction of boats that were in operation for more than fifty years and are now in display in France. However, this material underwent a period of very little use until 1943 when it was taken up again by Pier Luigi Nervi who used it for the construction of large transport boats.

Extensive research and experiments by the Italian Navy to determine the physico-mechanical properties of ferro-cement and

the coming of the war, at which time steel became scarce and expensive, made people think more seriously about this material for naval construction.

The operational performance of ferro-cement ships has proven to be very satisfactory and comparable to steel and wooden hulls, having smaller initial and operational costs, simple repair and maintenance.

After Second World War Australia, Canada, China, Czechoslovakia, England, New Zealand and Russia, among others, adopted ferro-cement for the construction of hulls realizing the savings implied in sheet metal, the simplicity of construction and of the procution process, and the high quality of the product.

Today there are many shipyards throughout the world which specialize in the construction of ferro-cement hulls. Naval architects are learning to design for this material but they still lack extensive information regarding the properties of it. Very few papers on ferro-cement were published during the 50's, and scientific research only started in the early 60's.

I. 2. Ferro-cement

As previously mentioned, ferro-cement can be briefly described as a composite material made of a matrix of concrete (Portland cement, sand, gravel and water) or more commonly mortar (Portland cement, sand, water and aggregates) reinforced with layers of thin wire steel mesh.

The mechanism of crack formation and propagation is not fully understood despite the efforts of several investigators

who tried to correlate the experimental results with theoretical predictions. Part of this difficulty is due to the fact that there is a very large scatter in the published data, and some of the results proved to be irreproducible by later investigators.

Many of the earlier investigations neglected what turned out to be useful information, as for example, the properties of the reinforcement, the composition of the mortar or even some testing procedures.

An important fact established by Key (4) is that the ultimate strength and the apparent modulus of elasticity of the commercially available woven wire mesh is different when the mesh is tested in its longitudinal direction and when it is tested in the transverse direction. This difference is caused, as explained by Key (4), by the plastic deformation of the wires induced during the manufacturing of the mesh; the longitudinal wires are bent to allow the shuttle to travel across with the transverse wire. Naaman (1) pointed out that it can also be caused by residual stresses added to the wire by alternate bending. As a result, the ultimate longitudinal stress is lower than the transverse one, the variation being smaller the smaller the yield strength of the wire. The modulus of elasticity of the woven mesh, which is not equal to the modulus of the wire, can be related to the weaving angle (see Fig. 1), the larger this is the smaller the modulus of elasticity, and because that angle is usually different in both directions the apparent moduli are also different.

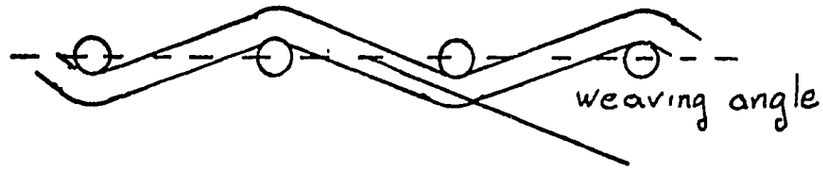

Figure 1. Showing Mesh Weaving Angle

Another important fact pointed out by Key (4) is that the properties of wire meshes coming from two different rolls of the same manufacturer can vary quite extensively because the current use of these meshes does not require a knowledge of its properties He thus recommends testing a sample from every roll to determine the properties of the mesh beforehand. These peculiarities of the reinforcement are bound to affect the behavior of the test samples; as it will be discussed later, the ultimate strength of ferro-cement is that of its reinforcement, the modulus of elasticity is linearly related to the modulus of the mesh, and the cracking pattern is related to the stress strain behavior of the meshes.

I. 3. Theoretical Approach

Concrete being a brittle material, it fractures under tension without undergoing plastic deformation. The measured tensile strength of concrete and mortar is consistently 8 to 10 times smaller throughout the whole range of their compressive strengths.

It is now an established fact that the mechanical properties of concrete are greatly enhanced by the addition of closely spaced steel reinforcement. However, there is disagreement on the reasons, and most investigators have subscribed to one of the two hypothesis which try to explain this fact.

The first postulated hypothesis uses Griffith's theory on fracture mechanics of brittle materials, while the second one explains the superior behavior of ferro-cement using concepts of the composite materials theory. We now proceed to outline both theories.

The theory based on fracture mechanics was first postulated by Romualdi and Batson (11), (10). They suggest that the weakness of concrete in tension is caused by the presence of structural flaws or microcracks, which act as stress concentrators at their tip, so that when the specimen is subject to stress, the flaws will propagate normal to the loading direction.

A crack, while propagating, absorbs the energy necessary to create the new crack surface (surface energy) and releases elastic strain energy (relaxation energy) that was concentrated around the crack. When the rate of elastic relaxation energy becomes larger than the rate of energy consumption, the crack will self propagate unstably. This energy balance theory was first established by Griffith (25) in 1920, later received contributions from Orowan (26) and Irwin (27), and was applied by Romualdi and Batson to analyze fracture mechanics in ferro-cement. They started from Griffith's postulate that the crack

will start to propagate unstably when,

$$\frac{\delta}{\delta c}(U-V) = 0$$

$2c$ - Crack length

U - Stored elastic energy

V - Crack's surface energy

Exact expressions for U and V exist in the literature for a limited number of crack geometries; Romualdi and Batson assumed a situation of plain stress for a degenerate elliptic hole of length 2.c and unit thickness

$$U = \frac{\pi \sigma^2 c^2}{E}$$

$$V = 4\alpha c$$

σ - tensile stress

E - modulus of elasticity

α - specific surface energy

$$\Longrightarrow \frac{\delta}{\delta c}(U-V) = \frac{2\pi\sigma^2 c}{E} - 4\alpha = 0$$

$$\frac{\pi\sigma^2 c}{E} = 2\alpha \qquad \text{- - - - - - - - - - - - - - (I. 1.)}$$

The left hand side of this equation is usually expressed as G (strain energy release rate), which is the work done per unit of extension per unit of thickness. The usefulness of this parameter is that its critical value (at which crack self propagates) is a property of the material.

From equation I. 1. we see that not very much can be done to improve the tensile strength since all the parameters are properties of the concrete, including c, which is approximately

constant given a certain mixture and process.

The introduction of steel fibers has, according to this theory, the purpose of modifying the stress field in front of the crack; by merit of a good bond between the mortar and the reinforcement, part of the strain energy that otherwise would concentrate in the tip of the flaw will be absorbed by the reinforcement delaying the propagation of the crack. Romualdi and Batson expanded Griffith's theory to cope with the addition of the reinforcement, and postulated that G_c is inversely proportional to the square of the spacing between the fibers. They pointed out that the spacing effect would be significant for wire spacing below .5 inches. The two investigators ran tests on samples with continuous wire reinforcement, and later Romualdi and Mandel (12) tested samples reinforced with short randomly oriented steel fibers. Both investigations agreed with the proposed theory; nonetheless, Shah and Rangan (3) questioned the results pointing out that in the first investigation Romualdi and Batson used wires with different ultimate strength in their aim to vary fiber spacing at constant volume fraction of reinforcement (they used stronger mesh in the closed spaced reinforcement samples). In the investigation using short fibers "their spacing-strength relationship was obtained by using fibers of different volumes as well as of different aspect ratios, using two types of testing methods (splitting tests and flexural tests)".[1]

In their investigation, Shah and Rangan arrived at the

[1] Shah, S. P., and Rangan, B. V., 'Fiber Reinforced Concrete Properties', American Concrete Institute, Title No. 68-14, February 1971, p. 128.

conclusion that fiber spacing does have an influence on the strength of the material for spacings over 0.8 inches, although this influence is much smaller than postulated by Romualdi and Batson, being negligible below 0.8 inches (see Fig. 2). This critical spacing (o.8 inches) is related to the length of the structural microcracks, implying that fibers spaced closer than a normal crack length do not influence as much the stress field at the tip of the crack, thus being inefficient. They conclude that a small volume of steel fibers does not affect the formation of cracks (or stress at first crack), but instead hinder propagation, this way increasing tensile and flexural strengths. This study and others performed by different investigators, have shown so far that although there is a dependence of strength on wire spacing, this dependence is much weaker and still very far from theoretical predictions. This has not discouraged research in the field, but very recently investigators have been more concerned with obtaining valuable data to be used in design rather than trying to find data that suits a proposed theory.

The second hypothesis based on the composite materials approach suggests that the presence of one phase improves the behavior of the other. It is postulated that concrete is capable of sustaining larger strains in the neighborhood of the reinforcing steel, and ferro-cement has a substantially larger surface of adhesion between mortar and steel as compared to the conventional reinforced concrete. Stresses also become more evenly distributed throughout the matrix, thus decreasing the probabilities

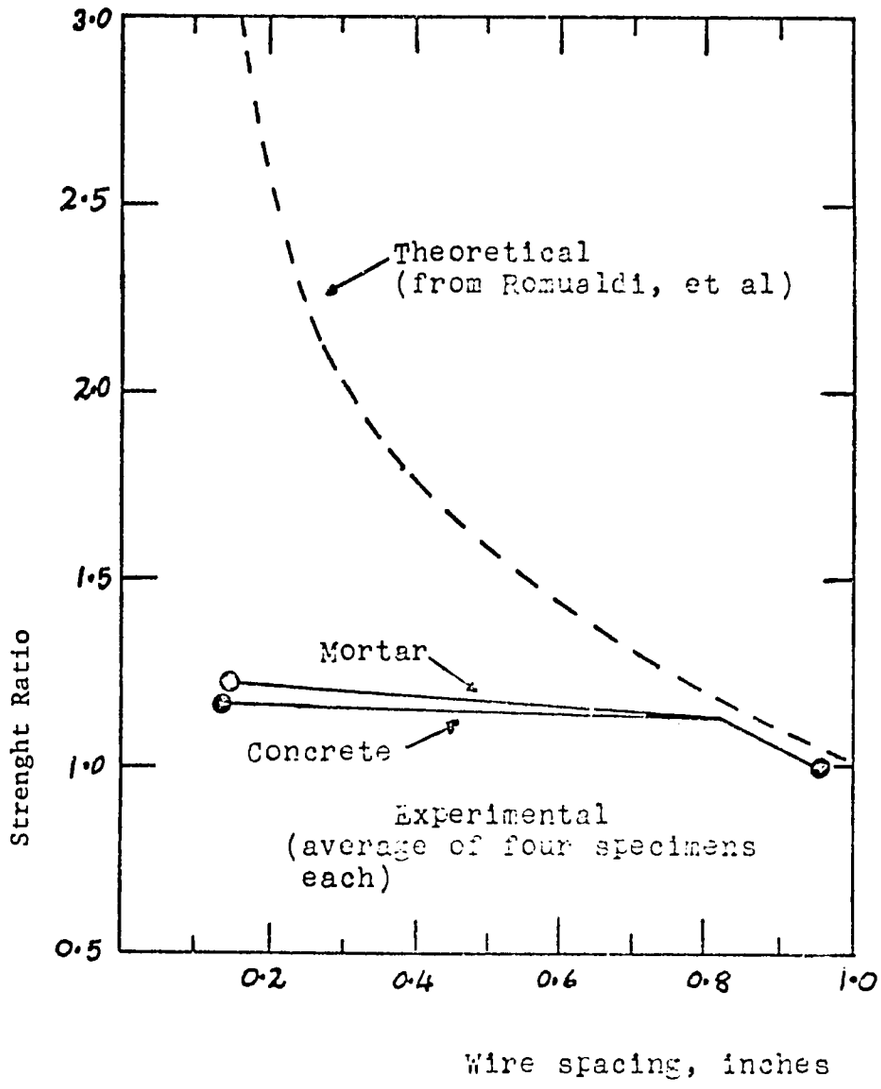

Fig. 2 -Effect of spacing of reinforcement on cracking strength of concrete (Reference 3)

of concentrated efforts. When thinner fibers are used their volume decreases as the sqaure of the radius, while their surface decreases linearly with the radius. This implies that at constant volume of reinforcement the specific surface (surface of fiber per unit volume of composite) is larger the smaller the diameter of the fibers. The specific surface of reinforcement was used by Bezukladov (14) as the parameter to analyze the results of his tests on ferro-cement samples in bending and tension. He found that leaving the fraction volume of reinforcement constant, stress at first crack and relative elongation increased with an increase in the specific surface of reinforcement up to its limit, ranging between 7.6 in^2/in^3 and 9 in^2/in^3, at which point the stresses of crack formation start to decrease.

Naaman (1), while performing more quantitative and extensive testing, found a linear relation between stress at first crack and specific surface of reinforcement up to an upper limit of 5 in^2/in^3 of specific surface in the direction of loading (which for square grid reinforcement corresponds to 10 in^2/in^3 of overall specific surface). He also found an increase in elongation at first crack with an increase in specific surface apparently reaching also an upper limit. The upper limit is reached, according to Bezukladov (14), when the reinforcement saturates the composite, and insufficient packing of the wires jeopardizes the combined action of the mesh and concrete. This results in a different kind of failure of the composite, characterized by the separation in layers parallel to the plane of the reinforcing meshes.

Key (4), who by using other mesh sizes performed similar tensile tests as Naaman (1), coincided with the latter in the linear relation of stress at first crack to specific surface. The results obtained by both investigators independently, are plotted in Fig. 3; it is worthwhile to notice the good agreement in the experimental data. Key (4) further found a linear relation between the number of cracks (or crack density) and the specific surface of reinforcement independent of the reinforcement's strength. He pointed out that once this maximum density is reached, the behavior of ferro-cement becomes dependent on the reinforcement properties.

It is remarkable to notice that the specific surface of reinforcement can be related to a number of other important parameters of ferro-cement; this is the case with: volume fraction of reinforcement, wire spacing, wire's diameter, the bonding force (of steel to mortar), and the area of the concrete cross section making of the specific surface of reinforcement a very useful and important parameter.

The second hypothesis is more empirically oriented and is supported by more valuable data than the fracture mechanics theory. This does not mean that there is no further need of a theoretical base; on the contrary, it seems that a point has been reached where by trying different kinds of mortar and reinforcement people have obtained optimizing values for the strength, stiffness and toughness, and these values can most efficiently be improved with a better understanding of the material characteristics and the development of new and more accurate models.

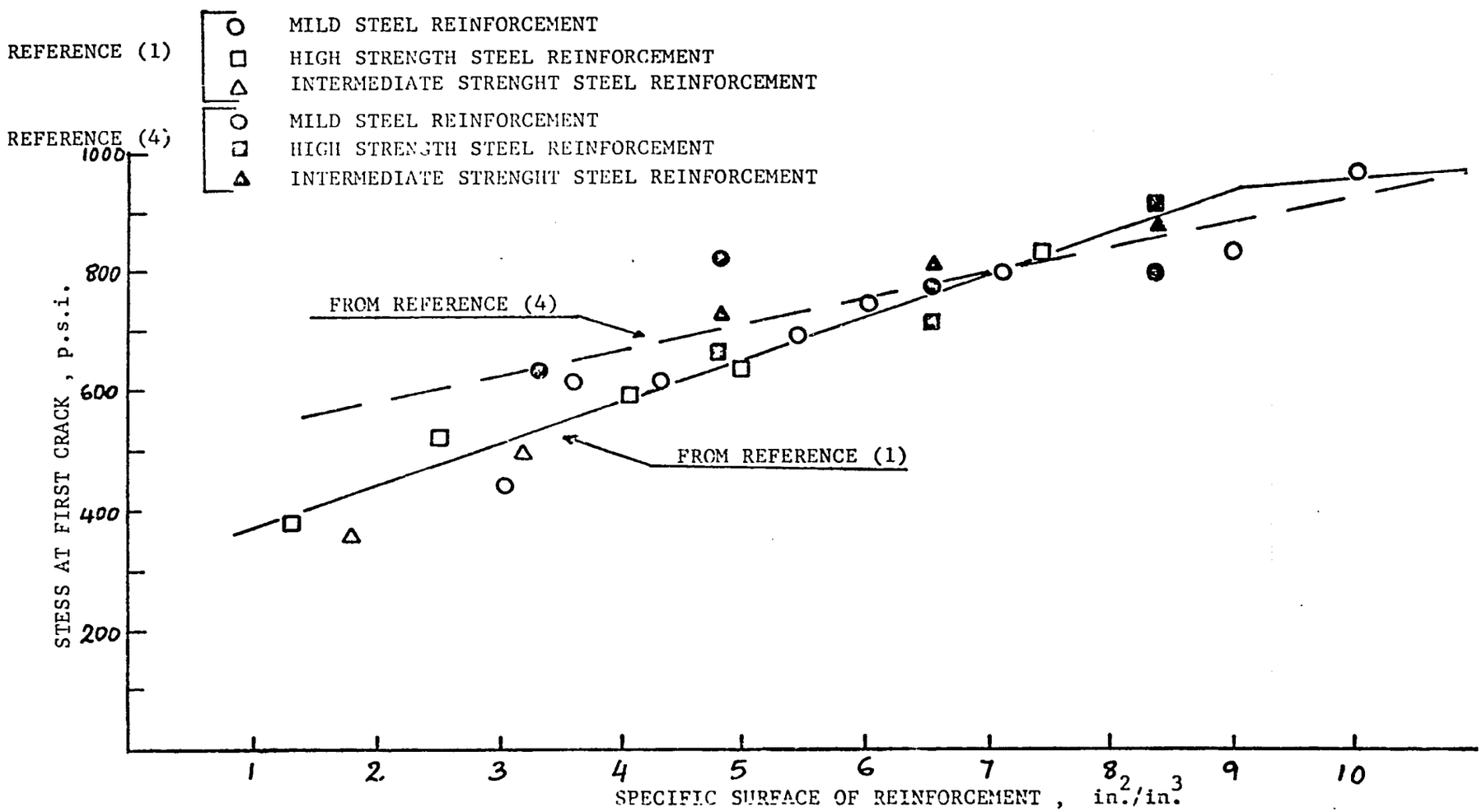

Fig.3 - Stress at First Crack vs. Specific Surface of reinforcement

CHAPTER II

MECHANICAL PROPERTIES

II. 1. Tensile Tests on Ferro-cement

When subject to tensile forces, ferro-cement goes through several stages before complete rupture. Briefly, we can say that at first structural flaws grow and new microcracks appear in the material; then, most of the elongation and energy goes into the propagation of these cracks, and during the last period the concrete matrix ceases to carry any further load so that the material behaves as its reinforcement.

When observing a stress strain curve we can distinguish the transition of one stage to the other by changes in the slope of the curve. Four sections can be differentiated (see Fig. 4). In the first section, ferro-cement behaves in an elastic manner so that all of the deformation disappears after release of the load. The behavior in this section, when small volumes of reinforcement are considered, is very similar to the behavior of unreinforced concrete; stress and elongation at first crack does not drastically vary. For higher fractions of reinforcement, over 2% by volume, the higher modulus of elasticity of the steel will have a stiffening effect, the elastic limit will consequently be higher and the specific surface of reinforcement will become more significant.

The transition to the second stage is determined by the appearance of the first crack and is indicated by the change in slope of the curve. Usually this crack is very small and cannot

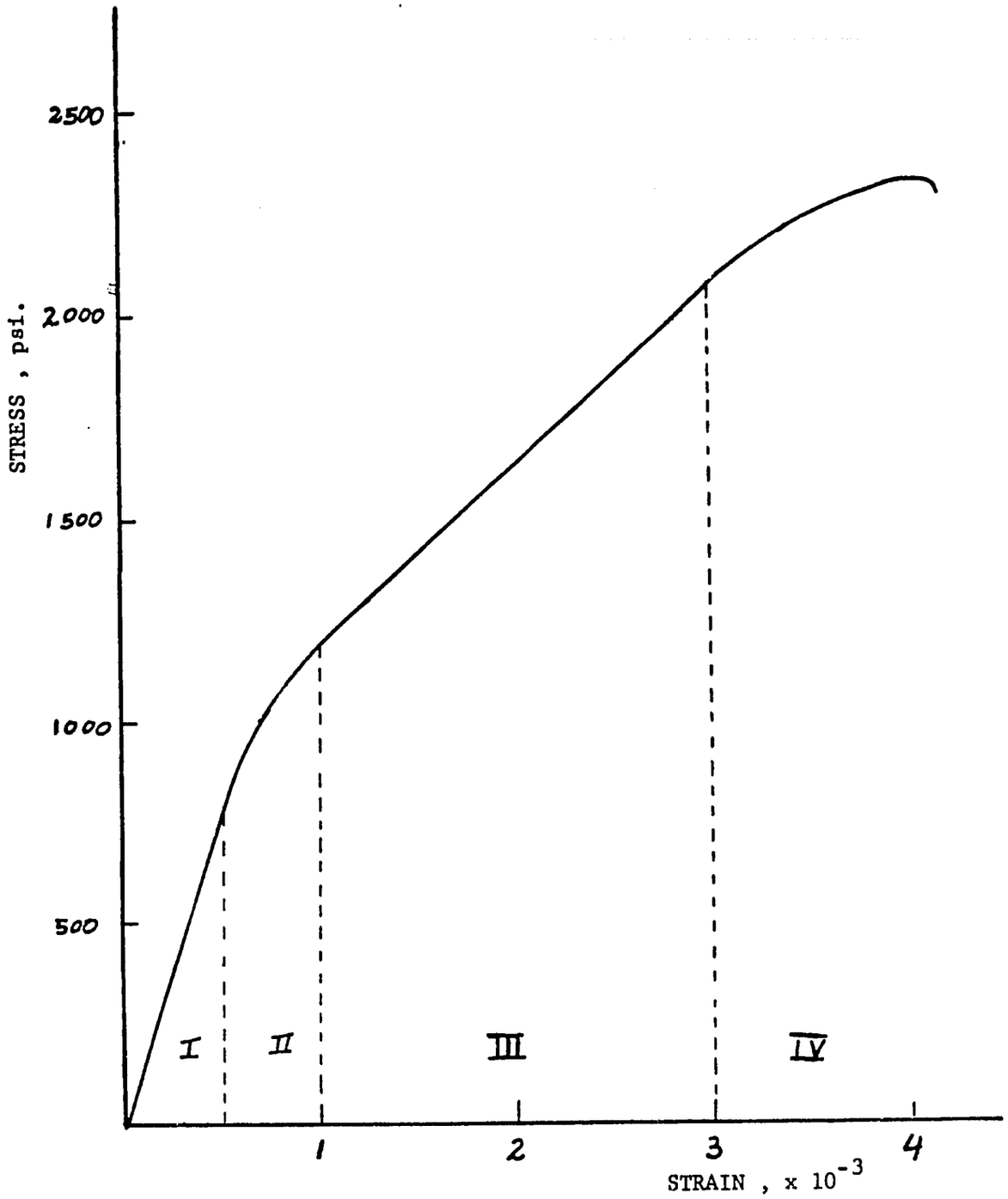

Fig. 4 - Typical Stress Strain Curve for Ferro-cement in Tension

be seen. For some applications, the stress at first crack is an important design parameter although in most cases people design for higher stresses than that. Naaman found that the stress at first crack is linearly related to the specific surface of reinforcement, independently of strength and ductility of the reinforcement (see Fig. 3).

The second section of the curve is characterized by the formation of new microcracks. These microcracks are very small and can only be detected by microscope or by using other indirect methods (in concrete some investigators have used ultrasonic devices to detect crack formation and propagation). At this stage microcracks are inhibited from propagating by the dispersed reinforcement so that this section can be pictured as a plastic region where energy is used irreversibly in the creation of new cracks and not in their extension.

In the third section of the strain stress curve, no new microcracks are formed and some of the microcracks propagate so that they become visible to the naked eye; the steel structure continues in its elastic range, whereas the matrix undergoes permanent deformation; ferro-cement still behaves in this section as a composite and it is for this range of stresses that Bezukladov advises to design for marine construction at operational and critical stresses.

In the fourth section the cracks open up and virtually all of the load is carried by the reinforcing steel so that the properties of the samples become those of the steel.

From the above description we notice that the difference

in tensile behavior between ferro-cement and normal reinforced concrete relies on the presence of stages two and three of the former, which are of negligible importance in the latter. Some authors distinguish just two zones in the stress-strain curve, the region where the reinforcement behaves elastically, usually called the elastic region, and the one where the reinforcement behaves plastically, called the plastic region of ferro-cement. In this case the first three previously described stages are together considered the elastic region; the fourth stage is the plastic region. By merit of the appearance of a large number of cracks before these propagate, ferro-cement behaves more like a ductile material having a stress-strain curve similar to that of a metal.

A qualitative analysis of the stress-strain curve will be related to the properties of the reinforcing mesh; in other words, once its geometry is explained the extent and boundaries of the regions described will depend on the characteristics of the steel used as reinforcement.

Stress at first crack of concrete has been related in an empirical manner to the specific surface of reinforcement. The relation between fraction volume of reinforcement and stress can be theoretically deduced by using "working stress" analysis (Appendix B) to obtain a transformed cross-sectional area that is isotropic and homogenous. In the original member the fraction volume of reinforcement in the loading direction is linearly related to the cross-sectional area of reinforcement and this,

again, is linearly related to an equivalent area of concrete added. In a pure tension member no consideration should be given to the location of the equivalent area of concrete added since moments of inertia do not come into the analysis. Below we show how the cross-sectional area of the transformed beam can be related to the fraction volume of reinforcement in the loading direction for a section of a beam shown in Fig. 5.

$$V_L = \frac{A_s \cdot L}{A_{cr} \cdot L} \quad \cdots\cdots \quad (2.1)$$

$$V_L = \frac{\frac{\pi \phi^2}{4} \cdot n \cdot \frac{D}{d} L}{D \cdot t \cdot L}$$

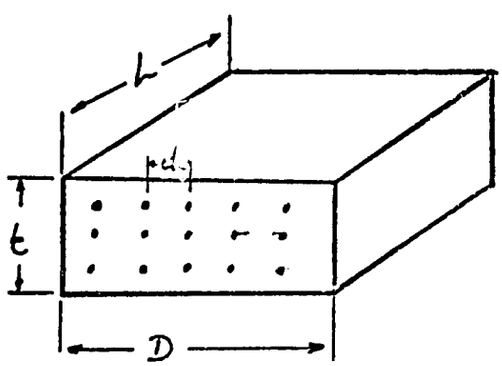

Fig. 5 - Section of Reinforced Beam

V_L - fraction volume of reinforcement in the loading direction

A_{cr} - cross-sectional area of original member

A_s - cross-sectional area of steel

A_{ca} - equivalent area of concrete added

A_{tr} - cross-sectional area of transformed beam

E_c - elastic modulus of concrete

E_s - elastic modulus of steel

n - number of mesh layers in sample

ϕ - diameter of wire in mesh

$$A_{cr} \cdot V_L = A_s \qquad \text{from equation} \quad (2 \cdot 1)$$

$$A_s \left(\frac{E_s}{E_c} - 1\right) = A_{ca} \text{ - - - - - - - - } (2 \cdot 2) \text{ shown in Appendix B}$$

$$A_{cr} + A_{ca} = A_{tr}$$

$$A_{tr} = A_{cr} + A_s \left(\frac{E_s}{E_c} - 1\right) = A_{cr}\left(1 + V_L\left(\frac{E_s}{E_c} - 1\right)\right)$$

$$A_{tr} = A_{cr}\left(1 + V_L\left(\frac{E_s}{E_c} - 1\right)\right) \text{ - - - - - - } (2 \cdot 3)$$

Equation (2.3) determines the cross-sectional area of transformed beam as a function of fraction volume of reinforcement.

II. 2. Ultimate Strength and Elongation

The ultimate strength of ferro-cement was found by Bezukladov (14) to be independent of the specific surface of reinforcement, yet related to the volume fraction of reinforcement, which is the relative amount of steel in the sample. Naaman (1) and Key (4) established that the ultimate strength of ferro-cement is approximately the same as that of the reinforcement (see Fig. 6). These facts clearly show that once the concrete is cracked, it ceases to carry any substantial tensional force, and therefore no composite action is shown after cracks are fully developed. It follows that to the effects of design at ultimate conditions, a first step would be to determine the amount of steel necessary to carry the desired stress and then consider the elongations, bearing in mind the observations that follow in the next paragraph.

Unlike ultimate stress, ultimate elongation is not in general that of the reinforcement. In fact, it was found that ultimate elongation varies with the specific surface of reinforcement increasing as the specific surface increases (1,14), up to a limit where the ultimate elongation of the reinforcement alone is reached. This increase is very remarkable in a low strength ductile type of reinforcement as can be seen in Fig. 7 from Naaman (1). This author pointed out that ferro-cement approached the elongation of the reinforcement at values of the surface of reinforcement over 3.5 in^2/in^3 in the loading direction.

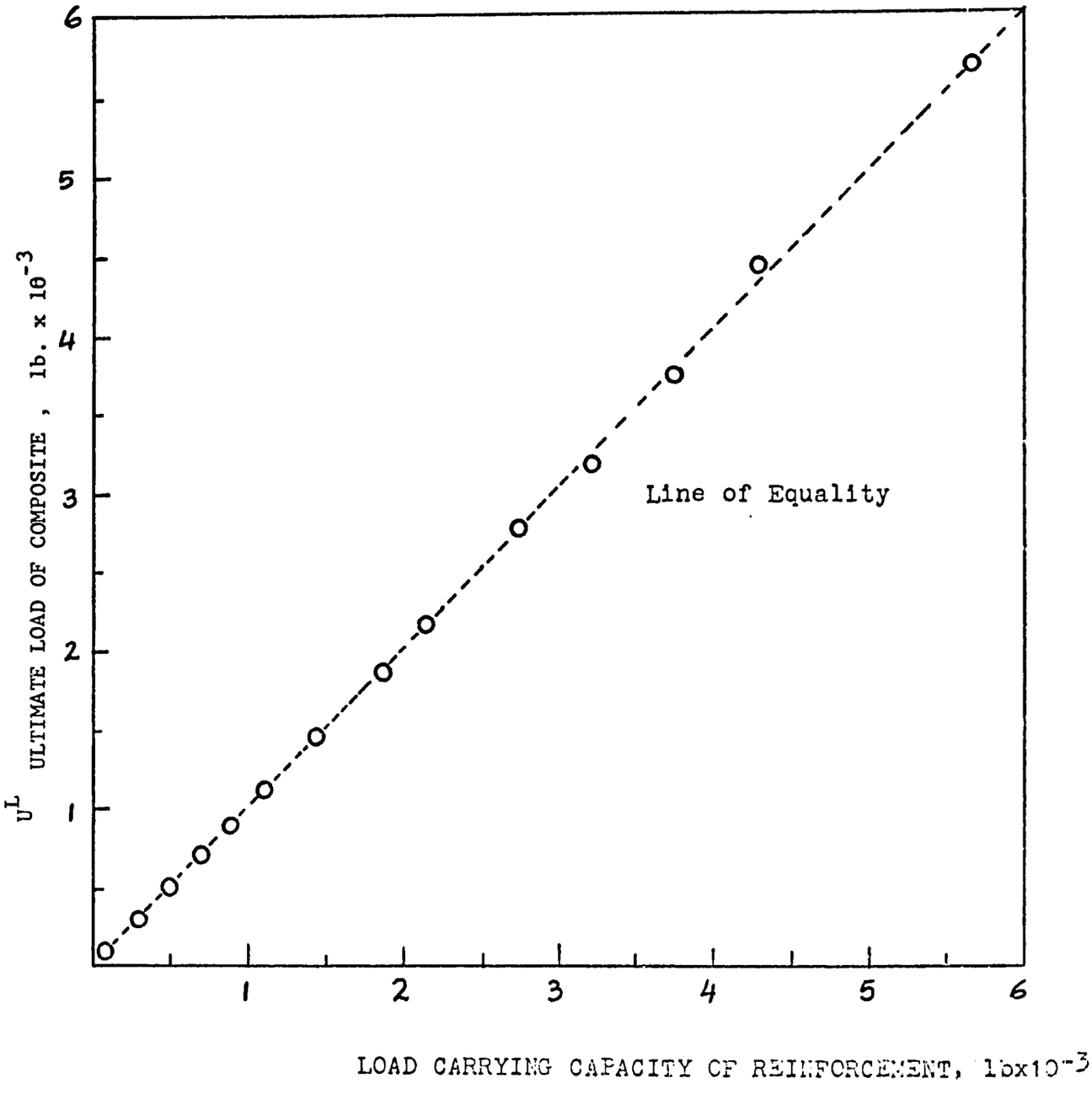

Fig. 6 - Ultimate Load of Composite vs. Ultimate Capacity of Reinforcement (Reference 1)

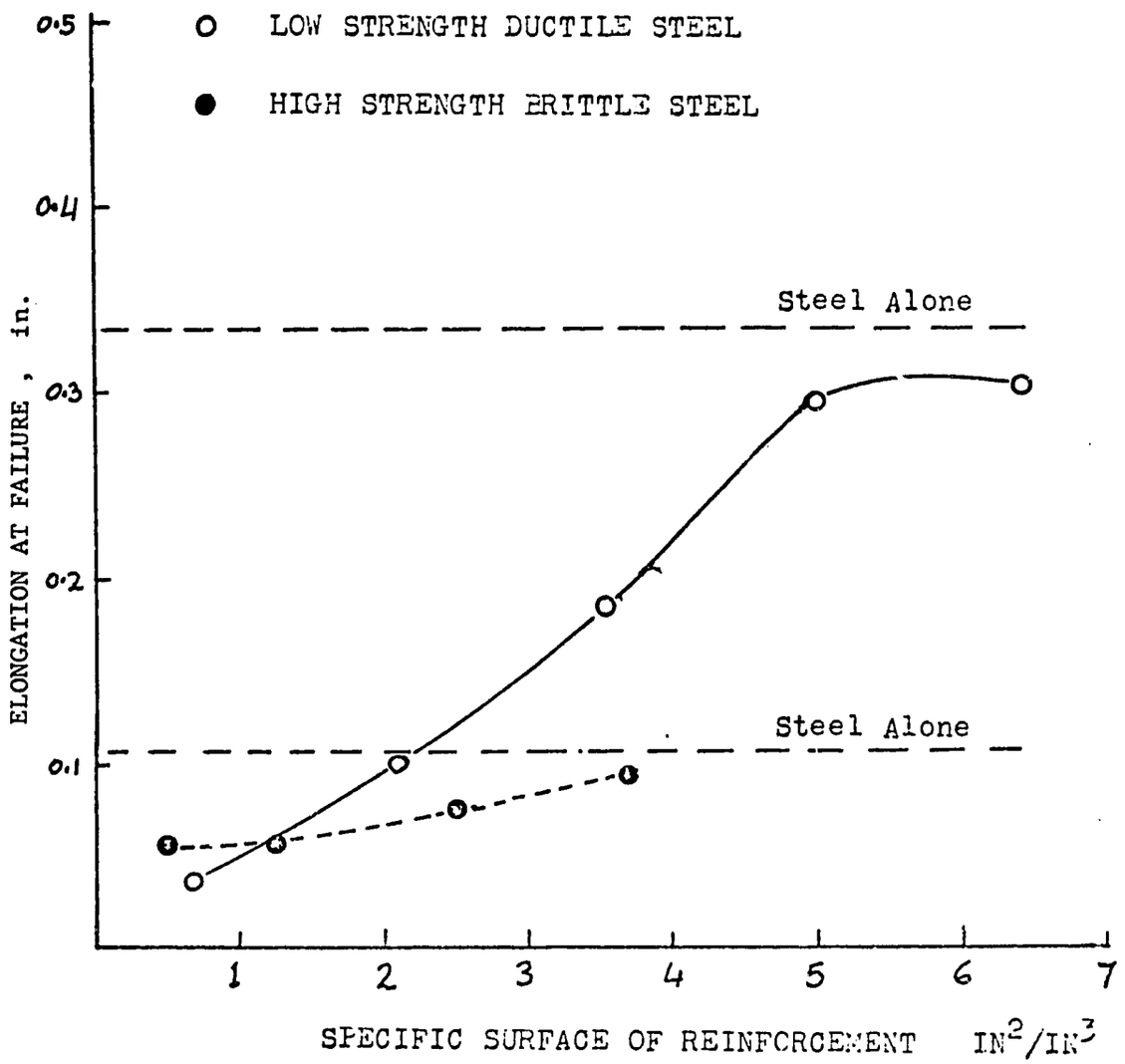

Fig. 7 - Elongation at Failure vs. Specific Surface of Reinforcement (Reference 1)

II. 3. Analysis of Ferro-cement in Bending

From a qualitative point of view, the deformation of the tension face of a member in bending shows the same characteristics as an axially loaded specimen. The stress-strain curves are similar in shape, and the same characteristic sectors that were distinguished in curves obtained through tensile tests can be distinguished for those obtained through flexural tests. The quantitative data, however, is different with bending member showing higher values of first crack and ultimate tension stress than axially tensioned samples having also higher modulus of elasticity. How much higher these values are, depends on the particular sample, reinforcement and distribution of reinforcement.

Flexural tests are very common in concrete and they are popular among the investigators because they are very easy to perform, the samples needed are very simple, just a straight rectangular beam with no gripping problems (gripping is a usual difficulty encountered in tension tests) but the results are in general much more complex and difficult to analyze. When a beam is in bending there exists three stress conditions in the beam itself: tension, with its maximum occurring at the outer surface, called tension face; compression, with its maximum occurring at the inner surface, called compression face; and neutral surface where transition from tension to compression, or vice-versa, occurs (see Fig. 8). The latter surface is free of stresses and in a homogenous isotropic material coincides wit the centroid of the cross section.

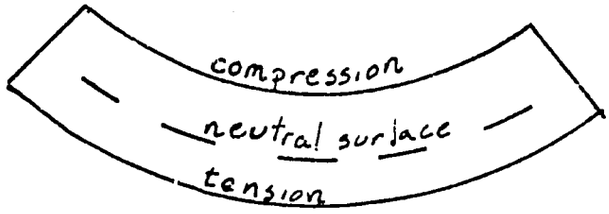

Figure 8 - Diagram of Beam in Bending

It should be realized that complications arise when a material composed of two phases is considered in which one phase is brittle and the other is fairly ductile, with different moduli of elasticity, different ultimate strength and a particular distribution of one in the other one. Many methods have been developed to overcome these complications and to model the situation in simple but accurate terms; most of this work was done to design traditional reinforced cement, although Muhlert (16) has adapted one of them, the owrking stress analysis, to the study of ferro-cement. This method, which can be applied to cracked and uncracked members, is outlined and discussed in Appendix B. Taking a close look at it we notice the relevance of different parameters, some of which are often times neglected or simply ignored by investigators in this field. This is the case, for example, with the distribution of reinforcement as it affects the location of the neutral axis and the moment of inertia, both factors being strongly related to stress determinations; the fraction of cross-sectional area occupied by each phase; the modulus of elasticity of the mortar and of the reinforcement as

these determine what fraction of the load is carried by which phase of the composite; and the state of the concrete, meaning whether it is cracked or uncracked. To illustrate the point, and to explain how working stress analysis is used, we applied it to one of the beams (series A) used by Claman (7) in his flexure experiment, calculations are shown at the end of Appendix B. We chose this particular case vecause the test procedure is correct and most of the necessary information to carry out the calculations is provided. Our only assumption was that the reinforcement was evenly distributed and that the thin layer of mortar that covered the outmost meshes was 1/16 in. In the uncracked range, the neutral axis was located in the middle of the beam as can be deduced without further analysis from symmetry considerations. The moment of inertia was found to be .01404 in^4 instead of .01041 in^4, which was the value calculated by Claman; this indicates that if stresses are calculated from the bending moments, using the formula for slender beams,

$$\sigma = - \frac{M_b \cdot y}{I_{yy}} \quad \text{-----} (2 \cdot 4)$$

σ - stress

M_b - bending moment

y - distance from neutral axis

I_{yy} - moment of inertia

stresses on the uncracked beam appear to be .727 of the stresses obtained using the value of moment of inertia given by Claman.

In practice, most of the design in bending is done for values higher than its yield strength, which means cracked members, although these cracks are very thin and usually not

visible unless with the aid of a microscope or a dye that will uncover the crack. This indicates that the maximum working loads on a member will depend on the compressive strength of the concrete, the tension strength of the steel and a good balance among them. An over reinforced beam is one which fails when the steel reinforcement reaches the yield strength, and a balanced beam is one in which both concrete and steel fail at the same applied load. As the balanced beam is a rare exception, for optimum design one should search in the under reinforced side as close as possible to the perfect balance. The reason for this lies in stability considerations, namely the unreinforced specimen fails after larger deflection than over reinforced specimen, implying that failure comes with more warning, and more energy is absorbed by the under reinforced beam before collapsing. Using working stress analysis outline in Appendix B, one can calculate for a specific ferro-cement specimen the maximum bending moment that can be sustained by the steel and by the concrete, as was done by Muhlert (16); this will indicate if the beam is over or under reinforced, and how close it is to be balanced. It is also possible to develop an algorithm which by means of iterations, and subject to certain constraints will optimize a given design: for example, given a fairly balanced beam by slightly modifying the location of the meshes within the same sample dimensions, the design may be improved.

II. 4. Shear in Ferro-cement

Little attention has been devoted so far to shear stresses and strains. Ferro-cement is neither homogeneous nor isotropic, and due to the nature of the reinforcement, it is possible to distinguish two kinds of shear stresses which should be considered independently (they are represented in Fig. 9). Taking as a reference the plane of the reinforcement,

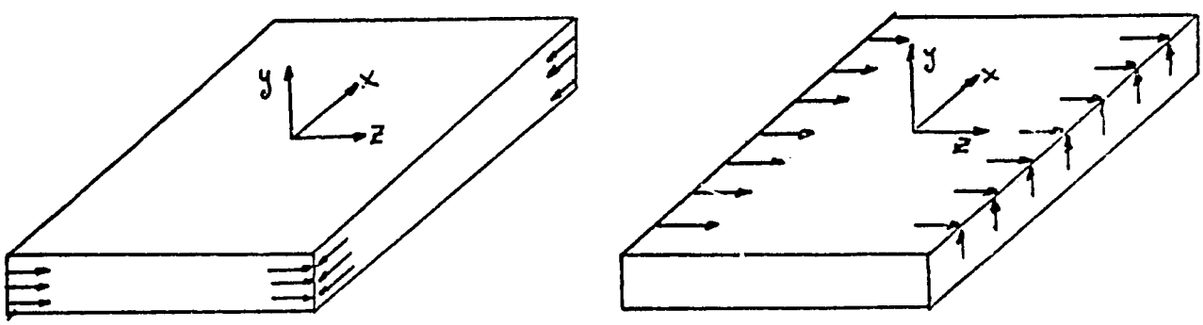

Figure 9 - Direction of Shear Stresses

(x,z) in the above diagram, the first category includes shear stresses that act on faces perpendicular to the plane of the reinforcement in a direction parallel to that plane (Fig. 9a); the second category includes shear stresses in the plane of the reinforcement and those occurring in planes perpendicular to the plane of the reinforcement acting in the direction perpendicular to this plane (shown in Fig. 9b).

The behavior of ferro-cement plates subjected to shear stresses of the first type mentioned was studied by Bezukladov (14). The testing apparatus was a four bar linkage to which square plates were bolted so that they could be stretched along one

diagonal and compressed along the other (see Fig. 10a); a record was taken of the pulling forces acting on the main diagonal and of the strains along both diagonals. With this information the shearing angle was approximated as follows,

$$\gamma \approx \tan\gamma = \frac{\Delta d_M - \Delta d_m}{d} \quad --- (2.5)$$

γ - shearing angle

Δd_M - dimensional change of major diagonal

Δd_m - dimensional change of minor diagonal

d - initial length of diagonals

and the shearing stress was calculated by,

$$\tau = \frac{F}{d, t} \quad -------- (2.6)$$

F - force exerted along the main diagonal

t - thickness of the plate

Failure of the samples occured by crack formation in the direction perpendicular to the expanding diagonal. This indicates that failure occurs when tension stresses reach a certain minimum value, and this is consistent with the fact that tensional strength is much smaller than compressional strength. The stress strain curve was found to be approximately a straight line which shows a slope change at a certain point that was not associated with any particular phenomenon.

The initial slope, which is taken as the shear modulus, does not change after the appearance of the first crack but after formation of a dense arrangement of cracks of practically constant width. In Fig. 11 we reproduce the stress strain curves reported by Bezukladov.

The study of the second type of shear deformation men-

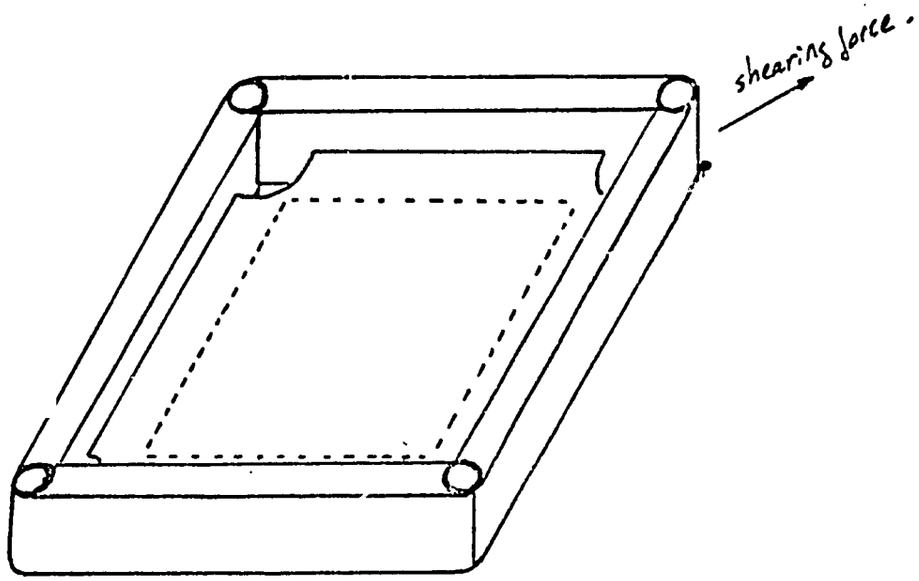

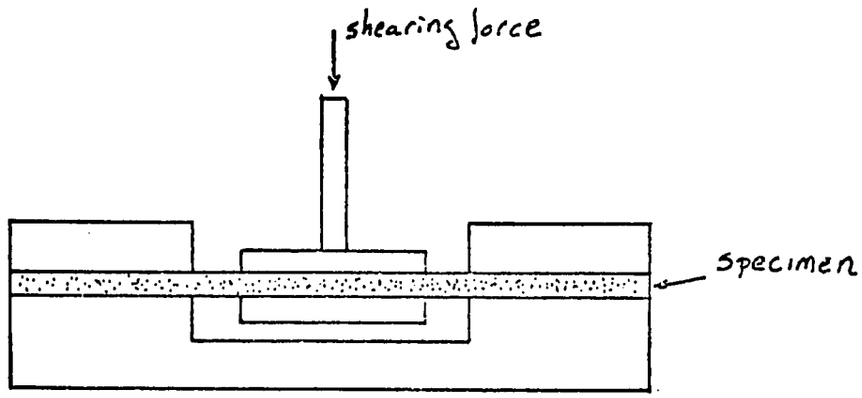

(b)

Fig. 10 - Shear Test Apparatus

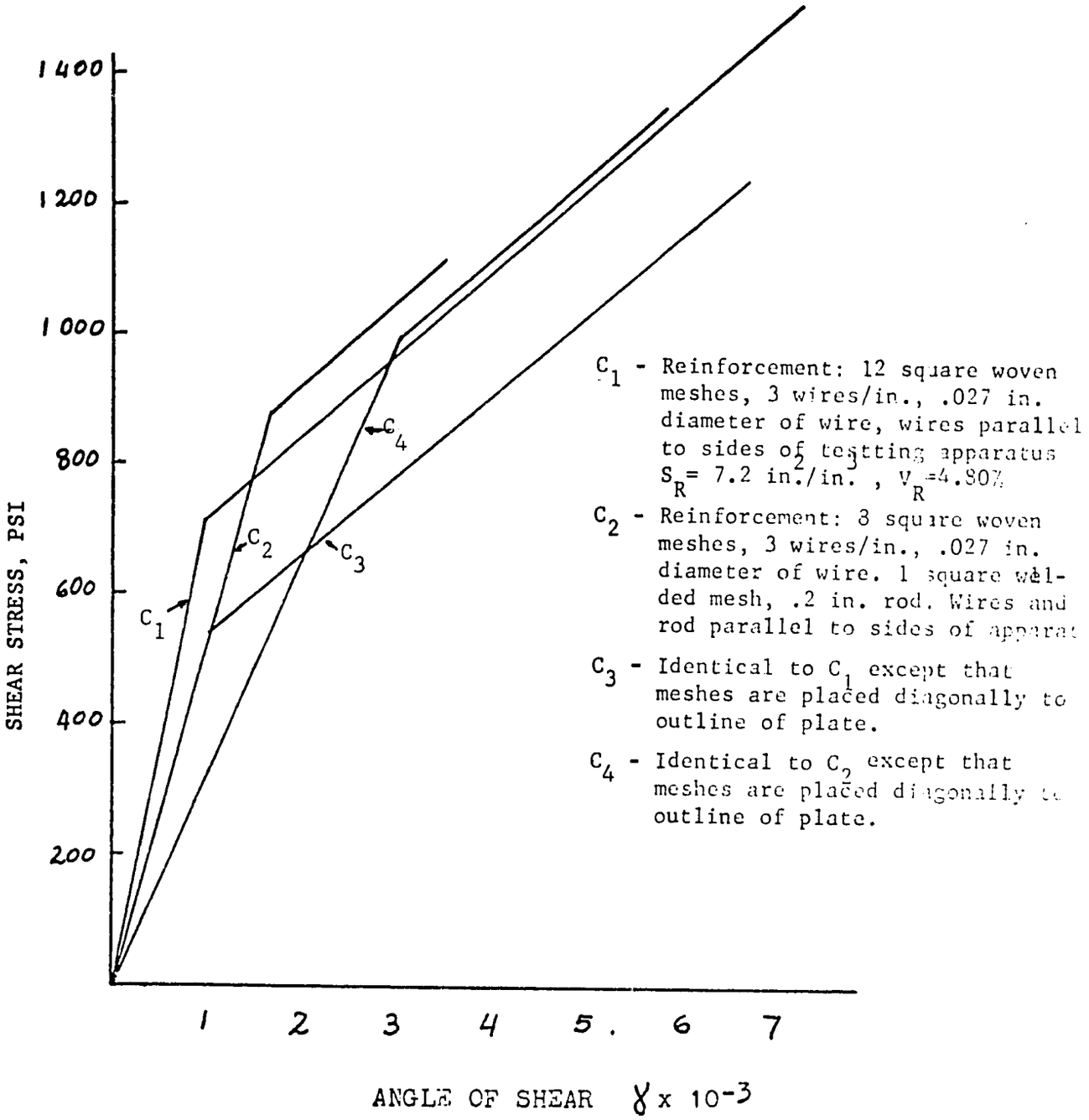

Fig. 11 - Shear Strength vs. Angle of Shear

(Reference 14)

tioned previously presents some difficulties with testing procedures. In fact, as the load should be applied normal to the plate's surface, part of the load goes into bending stress and part into compression, which sometimes causes crushing of the samples (diagram of testing apparatus appears in Fig. 10b). Claman (7) performed shear tests on beams about 1/2 inch wide and 1 inch deep, and noticed as Bezukladov did, an abrupt slope change of the stress-strain curve after formation of cracks. He also observed an abrupt unloading after the mentioned slope change of the curve. As it could be expected, the shear strength that he reported for mesh reinforced beam, which was 1093 psi, was about 30% higher than the values obtained by Bezukladov.

II. 5. Fatigue Tests on Ferro-cement

Engineering materials that are subject to cyclic loading fail after a number of cycles if that load is smaller than the elastic limit, but larger than a certain percentage of that limit. Usually the fatigue limit is taken as the macimum cyclic stress that can be applied to the material without failure after 10^8 cycles.

It was noted that the failure mode of non-reinforced concrete samples subject to cyclic loading is similar to that of samples under increasing tensile stress, namely by propagation of microcracks. These propagate by small increments in every cycle until a critical crack length is reached for which the real cross-sectional area (that is, the fraction of cross-sectional area that is not fractured) is so reduced that it is unable to carry the applied load, and failure occurs. It is known that a uniform distribution of reinforcement hinders crack propagation, therefore it is expected that the fatigue characteristics of ferro-cement will improve over regular reinforced concrete. The rather limited information that was found on this topic will be discussed below after observing the results obtained by Shah and Chandra (6) on unreinforced samples of concrete under cyclic compressive loading. This study describes very good working techniques, reliable results and a good description, and understanding of the physical phenomena, qualities that were not generally found in the investigations of fatigue tests of ferro-cement; it is thus thought that it can provide future researchers

in this field with a good working scheme.

The fact that the concrete suffers from creep, implying that the load deflection characteristics are time dependent, induced Shah and Chandra to perform fatigue tests by slowly applied loads, being these the conditions of normal usage of concrete. Microcracking and crack propagation were studied by measuring atenuation and velocity of ultrasonic pulses, and through direct microscopic observation of carefully ground, polished and dyed specimens, while strain measurements were recorded using strain gages attached to the surfaces of the samples. Analyzing the results they distinguished two stages of crack growth: stage I, characterized by slow but progressive propagation of cracks with volume contraction under compressive loading, and stage II, characterized by rapid extension of microcracks and volume dilation occurring simultaneously. Stage I was observed when loads were applied at a slow rate and of amplitude below 70% of the breaking load. It is concluded that cyclic loading does not cause viscous flow as with ductile metals, but it induces crack propagation, and that the loading rates are important as they influence the fatigue characteristics of cement.

D. R. Lankard (29) tested over fifty samples of mortar both with and without steel fiber reinforcement in one direction cyclic flexure. He found the fatigue limit of the reinforced samples to be 95% of the first crack stress in specimens subjected to two to three million cycles, while the fatigue limit of

plain mortar was 65%. Similar tests were performed on concrete reinforced with the same type of steel fibers (2% to 3% by volume, .5 inches to .525 inches long and 0.006 inches in diameter, aspect ratio 94) and for these the fatigue limit was 90% in one direction loading and 75% in reversal loading.

Romualdi, Ramey and Sanday (13), who worked with 2 and 2.5% by volume of fiber reinforcement (o.006 inches in diameter, .500 and .625 inches long; aspect ratio of 83 and 104) performed fatigue experiments by one point one direction flexure on beams 38 inches long, 2.5 inches wide and 3.0 inches deep. Failure was defined as the appearance of the first crack at 50X magnification, and a satisfactory fatigue limit was considered to be over 2×10^6 cycles obtained at a rate of 1800 cycles per minute. Under these conditions the investigators found that the fatigue limit of steel fiber reinforced samples ranged between 90% to 95% of the cracking strength while unreinforced beams showed a limit of around 55%. There is a further interesting point to be mentioned in connection with this investigation: Romualdi, et al, found that flexural tests performed on samples which had been subjected to fatigue loading but which had not failed, showed larger resistance than when tested prior to fatigue loading. They explain this phenomenon by saying that cyclic loading releases residual stresses that build up when curing shrinkage is restrained by the presence of the reinforcement. They postulate that post fatigue flexural cracking strength is increased by the amount that the residual stresses are reduced.

Collins and Claman (9) report on the results of an unpublished thesis by Bailey of Clarkson College of Technology, who worked with fiber reinforced concrete and found lower fatigue limits, 60% to 70% of the pre-fatigue static cracking stress. The steel fibers used in this investigation had an aspect ratio (length over diameter) lower than that previously mentioned, and this is probably the reason for the poorer fatigue performance.

The three investigations just mentioned were the only information available to the author on steel reinforced concrete. There is no work known that reports on the fatigue characteristics of wire mesh reinforced concrete, which is the main subject of this study. Furthermore, the investigations by Lankard and by Romualdi, et al, were very similar; same type, size and percentage of reinforcement, and same testing procedure reporting very similar results. All this indicates that much research is yet to be done in this field, hopefully covering a very wide range of situations which are still not mentioned. Some ideas in this respect could be the performance of fatigue tests by axially loading in tension, in compression and reversal loading at different rates, including slow rates (of the order of 4 to 6 cycles per minute) as mentioned in Shah and Chadra's study; performance of fatigue tests of members in torsion, being this a loading mode of which there is no available information in connection with ferro-cement; the performance of fatigue tests on beams subjected to pure bending by using a four point loading set up thus eliminating shear stresses in the central section of

the beam. All this testing should be performed for different types and distributions of reinforcement in order to determine if the fatigue limit can be related to any important design parameter. It was mentioned that deformation of concrete is time dependent, therefore testing has to be performed at rates comparable to those occurring under normal usage, which are usually much slower than testing rates. Further understanding of the failure mechanism of reinforced concrete under cyclic loading is needed, and for this purpose it is recommended to observe crack propagation by using microscopic and sonic equipment as well as by using strain gages for measuring directional and volumetric strains.

II. 6. Modulus of Elasticity

The modulus of elasticity which is the constant of proportionality between the applied stress and deformation of an elastic material can be predicted for a composite if the composition and the moduli of matrix and reinforcement are known. The relation to determine the composite modulus is usually written in the following form:

$$E_c = E_r V_r + E_m(1-V_r) \qquad (2.7)$$

where

E_c - modulus of elasticity of the composite

E_r - modulus of elasticity of the reinforcement

E_m - modulus of elasticity of matrix

V_r - fraction volume of reinforcement

E_r is the modulus of elasticity of steel in the case of fiber reinforcement and the modulus of the mesh for mesh reinforcement. It was pointed out previously that the modulus of elasticity of the woven meshes is lower than that of steel. The reason for this is that part of the strain goes into straightening out the wires in the direction of the load. How much lower the modulus of the mesh is depends on how much the wires are bent and this is proportional to the diameter of the wires and inversely proportional to the spacing between transverse wires. Therefore, to improve the modulus of elasticity of ferro-cement it is recommended to use fairly wide mesh (1/4 inches or bigger) and thin wire (see figure 1). With a higher modulus of elasticity ferro-cement will exhibit first crack at higher stress and thus

will improve the design characteristics.

Once a ferro-cement specimen has cracked, it is reasonable to assume that the matrix carries no more tensile load so that the expression for the composite modulus will be reduced to,

$$E_c = E_r V_r \qquad (2.8)$$

It is mentioned in most of the investigations which disvuss this subject, that the two expressions mentioned above give very close values to physical observations, but generally in the lower side. It should also be pointed out that the modulus of elasticity of concrete varies depending on the composition of the mixture, compaction of the wet mixture and curing process; therefore, it is advised to test a plain concrete sample before designing a ferro-cement structure. Common values for the modulus of elasticity of concrete, taken in compression tests, range between 10^6 and 5×10^6 psi. Mortar, which is more used than concrete in ferro-cement, has modulus of elasticity between 2×10^6 and 3×10^6 psi.

CHAPTER III

SURFACE PHENOMENA

III. 1. Corrosion

The references which were consulted for this section treated corrosion on unreinforced concrete and on regular rod reinforced concrete; no studies were found specifically on chemical attack on ferro-cement. It is thus estimated that extensive research has to be performed in this area because, although there might be some similarity in the mechanism of chemical attack with regular reinforced concrete, ferro-cement has a much more dispersed reinforcement, a larger surface of exposure, and in general the thickness of protective concrete is much thinner.

There are two ways by which regular reinforced concrete can deteriorate when subject to chemical attack: by corrosion of the reinforcing steel, and by attack on the matrix.

Steel expands under oxidation or rusting, thus causing cracks in the surrounding matrix. In this process, steel looses strength because it is only capable of carrying load in the unattacked fraction of the cross-sectional area, and concrete decreases in strength due to premature cracking that often includes spalling. The forces of adhesion between the steel and the concrete decrease as well, and thus the coupled action of the two phases is jeopardized. Much of the mesh that is used to reinforce ferro-cement is galvanized providing better protection to oxidation than plain steel, but the ratio of surface area of exposure to volume of reinforcement is much larger;

therefore, once a corroding agent reaches the reinforcement, it will corrode it at a much faster rate. To prevent oxidation of the reinforcement, it is recommended to use a dense, well packed mixture of low water to cement ratio which is free of cracks, in this manner preventing the access of oxygen and dampness of the steel. In regular reinforced concrete, people advise to cover the reinforcement with at least two inches of concrete, rather impossible to accomplish in ferro-cement because it is usually one to two inches thick.

In most cases, deterioration of the sand-cement matrix under chemical attack is caused by the presence in the matrix of uncombined lime, usually known as free lime, that readily reacts with many subjstances to form compounds which alter the continuity of the matrix, therefore weakening it.

A kind of cement called high alumina cement, is used in applications where concrete is exposed to corroding agents. Alumina reacts with the calcium oxide or calcium hydroxide, which are formed during hydration, and form aluminum oxide, more stable than lime. This type of cement is disadvantageous in its being more expensive than regular cement.

Other kinds of treatments that have been tried on regular reinforced concrete, and which can be applied to ferro-cement, have been based on one of the three following processes:

(i) Etching of the surface, so that pores are blocked and concrete becomes less permeable.

(ii) Surface coating, which prevents contact between concrete and the aggressive solution.

(iii) Reaction with the free lime, so that the active elements in the matrix become inert.

The choice of the process has to be based on the application intended for ferro-cement, and on cost considerations if two or more processes are suitable. The first two ways of protection mentioned are based on the same principle of avoiding the penetration of the attacking substance. They differ in that etching also hardens the surface as it simultaneously makes it smoother, improving the abrasion properties of ferro-cement. On the other hand, this type of treatment is only good for weak attack so that it usually has to be complemented with surface coating.

Samson and Wellens (18), who are ferro-cement boat contractors, recommend complementing both processes; etching should be done when ferro-cement is wet using a 5% to 10% solution of muriatic acid. Acid is then washed off and neutralized with a 5% to 10% caustic soda on the etched surface. These two authors recommend the application of two coats of epoxy resins on the etched surface, and of epoxy paint over the resin.

Other etching substances that have been used on concrete are magnesium, or zinc fluosilicate, hydrofluoric or hydrosilicofluoric acid, or their salt. In the precast industry, a process commercially known as Ocrat is used; it employs silicon-tetrafluoride gas under pressure.

For surface coating several substances can be used: In precast concrete units are impregnated with bitumen and then

it is put under pressure so that the bitumen fills in the pores and surface microcracks. Paints used on concrete for other applications are based on drying oils with aggregates to assist penetration, natural and synthetic resins, chlorinated rubber paints, coal tar, bituminous mastic, etc.

Another approach to reducing free lime in a sandy cement matrix is to use an inhibitor, which is a substance mixed with the water used for manufacture of the mixture. Bezukladov (14) recommends to use sodium nitrite in a concentration of 1.2% to 2% of the cement weight.

III. 2. Abrasion

Wear of concrete can be caused in many ways, but two broad categories will be distinguished: one type of wear is caused by friction with another solid, metal, concrete or otherwise; the second type occurs in hydraulic applications where most of the wear is caused by cavitation of the fluid.

The first consideration in the design of concrete that will be subjected to abrading agents of any kind, should concern the compressive strength of the material. Taylor (28) points out that the initial wear rate of a concrete of 2,000 psi compressive strength is about five times the rate of a 4,000 psi specimen, but over 4,000 psi the dependence of abrasion resistance on compressive strength is very much reduced. It is thus recommended to start with concrete of strength 4,000 psi or over, and for that purpose it is advised to use one of the following techniques, or a combination of them, which should produce good quality concrete: use as low water to cement ratio as possible; extract part of the mixing water by vibratory compaction or pressure consolidation and carefully control quality and quantity of mixing elements. The procedures just mentioned are of common usage in connection with concrete, therefore extensive information in any of those particular topics can be found in the literature.

A second consideration for abrasion resistant concrete should be given to the quality of the aggregate once one has obtained a mixture of 4,000 psi minimum strength. Aggregate should be tough, hard and dense; grain size distribution has to be care-

fully controlled and it is strongly recommended to use a minimum of fines, if possible not more than 5% passing No. 100 sieve; control has to be imposed on the moisture content of the aggregate, although for laboratory applications it may be kept near zero; in production moisture should be controlled, kept to a minimum.

A third consideration should be given to special treatments that can be given to the concrete, and which have proved to improve the wear characteristics of the material. We will just mention a few with no comments because they are of easy access in the literature, and because some are discussed in this paper. Some of these treatments are: high pressure steam curing, using a lime-silica base in conjunction with cement; gas-hardening treatment of surfaces, in particular carbonation; granular metal surfacing; surface-hardening treatments, by application of liquid coating; provision of artificial surface like coating, painting or similar others.

No method has been developed for accurate quantitative analysis of concrete abrasion, and the relations used in metals cannot be used because the wearing mechanisms are different. Wear of concrete by sliding forces is caused by frictional forces breaking the bond between the matrix and the aggregate, by breaking of aggregate particles or by breaking the matrix.

III. 3. Abrasion of Hydraulic Structure (Cavitation)

Cavitation is a process in which vapor bubbles form in the bulk of a liquid. This occurs when the pressure in the flowing liquid falls below the vapor pressure corresponding to the temperature of the system; this is usually caused by velocity changes.

Cavitation can be harmful in hydraulic equipment because vapor bubbles that are formed in the process collapse on entering a zone of higher pressure, determining localized and repetitive high pressure gradients. Local values up to 100,000 psi are estimated in a high velocity flow, which is sufficient to rapidly erode high quality concrete. In order to prevent this destructive action of fluids, smooth and uniform flow should be sought through design and construction of smooth surfaces.

A technique which gives good results but which has limited application is to introduce a gas into the fluid, since in its presence cavitation will be governed by the pressure of the gas rather than the vapor pressure.

Special studies in this topic are available mainly in connection with concrete piping. No work has been found which treats abrasion of any type on ferro-cement samples, thus leaving another entire area for research.

CHAPTER IV

MORTAR

IV. 1. Mortar Composition

The effect of mortar composition on the mechanical behavior of ferro-cment is very small. Key (4) found that increasing the sand to cement ratio from .75 to 3.0 decreased the ultimate strength of the composite by 10% which is a rather small response. Most of the other investigators used a ratio lying between the two bounds used by Key.

It is common to use sand with few fines, less than 10% passing No. 100 sieve, and no coarse sand, 100% passing No. 8, with an even distribution in the intermediate sieves; masonary sand usually fulfills this size requirements.

The cements most commonly used are type I, the regular kind, and type III (High Early) which is a fast setting kind. Some investigators have compared the performance of one and the other, arriving at the conclusion that there is no significant difference in their mechanical behavior; however, type III has the advantage that it develops almost full strength in 7 days and is thus preferred for experimentation.

Pozzolan, an additive that is sometimes mixed with cement in a 5% to 15% by weight proportion, is a fine amorphous silica or silicous aluminous material which in the presence of moisture will react with calcium hydroxide or free lime liberated during hydration, and form cementuous materials. In this manner, a more compact and stronger material is obtained at the cost of a larger setting period; workability in the unhardened state

is improved, an advantage for ferro-cement because it helps to fill in well around the meshes.

The water to cement ratio is the parameter which, to a larger extent, determines the mechanical behavior of mortar or concrete. The Duff A. Abrams' water/cement ratio law states that fundamentally the strength of concrete is determined by this ratio provided that the mixture is workable, fully compacted and adequately cured, the relation being,

$$C = \frac{14000}{5^{\frac{2}{3}X}} \quad ---- (4.1)$$

C - cylinder compressive strength of moist cured concrete at 28 days given in pounds per square inch.

X - water/cement ratio by weight.

Some authors suggest that the procedure to select the mortar or concrete mix is to first choose the water to cement ratio that will give the minimum desired strength and durability by using tables or other available information, then determine experimentally the sand to cement ratio that will give a dry but workable mixture, and which can be compacted with the available equipment.

The water to cement ratio that most investigators have used was commonly around .5 (by weight), with a minimum about .35 and a maximum .65; not very much compaction or drying equipment was used, at the most a vibrating table.

IV. 2. Curing of Concrete

Curing is the process adopted during the hardening of a concrete mix to ensure that the chemical reactions, hydration, proceed in a normal manner under favorable conditions. The factors that can be controled and which influence this process are temperature, water content (also referred to as moisture or humidity), pressure and time (period of application of certain conditions). The behavior of cement in the hardened state is very much influenced by the factors mentioned, therefore, it is very critical to follow a controled and effective curing process in order to obtain good quality concrete.

The most simple and common way of curing, known as moist curing, consists of water spraying or wetting the concrete for a period of seven to ten days, preventing in this way premature drying which would result in incompleteness of the chemical reactions. This practice is particularly effective during the early stage and especially in concretes that set rapidly as the type III, High Early Cement, which is commonly used in fabrication of ferro-cement. Temperature has to be carefully controled and kept between 60 F and 90 F, showing optimum results around 70 F; divergence from these limits may result in reduced strength and quality of concrete. Moist curing reduces permeability, thus increasing the resistance to chemical attack and frost action. Other ways

of keeping the mixture damp is to prevent or restrain the evaporation of moisture, thus obtaining similar results. This can be attained in several ways that can be classified into: etching, which produces a smooth surface closing or partially closing pores through which evaporation takes place; painting or applying an impervious coating on the surface; covering the concrete with an impermeable membrane that confines a water saturated environment around the concrete hindering evaporation from the surface.

There is another class of curing methods designed to speed up the gain of strength of concrete and shorten the curing time. These were developed for the prefabrication industry, where ther is obvious advantage in reusing molds at a faster rate cutting down delivery time and reducing storage space. Curing, as a chemical process, can be accelerated by increasing the temperature of the environment; this has to be achieved without loss of moisture of the mix, and both conditions are fulfilled by providing a steam environment in a process known as steam curing. We can specifically distinguish between two types of steam curing: low pressure steam curing at temperature ranges between 100° F and 200°F, and about atmospheric pressure which produces concrete of characteristics very similar to regular moist cured concrete; high pressure steam curing at 150 psi and 350° F, which produces a rather different product since at high temperatures new chemical reactions take place which consider-

ably improve the behavior of concrete.

As mentioned above, low pressure steam curing can be done at a wide variety of temperature ranges, but distinction is made between the low temperature and the high temperature ranges. In the first case, steam is maintained at a temperature of 100° F to 130° F, depending on the size of the part, for a 10-hour to 14-hour period during which enough strength is gained to permit demoulding. This is followed by moist curing for a minimum of seven days.

The low pressure curing at the high temperature range is usually done at 160° F to 170° F for a period of 10 to 16 hours. It is convenient to start the steaming a few hours after concrete has been poured in the molds; during this period that is usually called presetting the internal temperature of the concrete increases due to the chemical reaction that is taking place. Steam is added at a slow rate in order to keep temperature gradients small thus preventing severe thermal straining. The maximum temperature is kept for 1 to 6 hours depending on the physical dimensions, type and size of aggregates and type of concrete; exact times have to be determined within the mentioned limits for each particular situation. Temperature is also decreased at a slow rate and subsequently the product is moist-cured for a minimum of three days.

The drying shrinkage, strength and appearance of concrete subjected to low pressure steam curing is very similar to moist

curing if all the steps are performed with care.

High pressure in curing is associated with high temperatures which accelerate chemical reactions very remarkably in some cases.

Free lime or calcium hydroxide which is formed as a product of hydration quickly reacts at high temperature with fine silica forming new stable and unsoluble compounds: some hydrated calcium silicates, but mostly hydrated dicalcium silicates,which in combination with aluminates, form very stable and sulphate resisting compounds, hydrogarnets. The high demand for fine silica in the reaction, requires that part of the Portland cement of the mix be replaced by finely ground silica or flyash; this results in costs reduction which may in the long run offset the higher initial costs incurred in the purchase of the equipment that includes a steel autoclave for high pressure steam.

Concrete products should be allowed a minimum of 2 hours, and a maximum of 24 hours of presetting, and then it should be steamed to 350° F in a 2-hour to 5-hour period, maintaining that temperature for 6 to 8 hours. The strength gain is very rapid in the first eight hours of steam curing, leveling off thereafter.

In general, the properties of high pressure steam cured concrete are very good. This concrete has very high strength, crack formation resistance, low shrinkage coefficient (therefore little moisture movement), good appearance, superior

chemical and abrasion resistance, fast delivery. The biggest inconvenience of this technique is a reduction of the bond strength between concrete and steel reinforcement to 30 to 50 percent of moist cured products.

Another process that was tried on unhardened specimens is mechanically pressing the mixture. This was suggested acknowledging the fact that the strength of cement is very dependent on its porosity or void density.

Experimentation in this area has been very successful; tests have been performed applying mechanical pressure up to 100,000 psi on small size samples of mortar. Roy, Gouda and Bobrowsky (31) reported on these and on hot pressing tests performed by them at 150 °C and at pressures from 2,500 to 50,000 psi. The procedure for cold pressed samples is fairly standard among the different investigators; it consists in mixing cement, sand and very little water (water-cement ratio about 0.21), stressing the mixture for 300 seconds and placing the sample in a vacuum chamber for 30 minutes, proceeding then with normal curing procedures. In the hot pressed experiments, pressure and temperature were maintained for one hour.

Results show that cold high pressured concrete has better properties than normal concrete, and hot pressed concrete has better properties than cold high pressured concrete. In mechanical behavior, compression strengths were recorded as high as 46,100 psi in cold pressed samples, and up to 73,900 psi in hot pressed samples. The tensional stress

increases linearly with the compression strength but it is about ten times smaller. Significant improvements in physical properties were also observed such as, very high density, very low porosity, very low dimensional change during curing and in the hardened state; in hot pressed mortar an early high strength is attained.

So far this method has only been tried on plain mortar so no information is available in respect to bend strength with the reinforcement. The larger capital investment that may be incurred for hot pressing may be offset by the advantage of having high early strength, but all this is still subject to research. Other properties of mortar treated in this manner have to be investigated, such as brittleness, toughness, fatigue, chemical attack, abrasion characteristics, durability, cost and others that will determine if the usage of the procedure is advantageous.

CHAPTER V

OTHER CONSIDERATIONS

V. 1. Cost

One of the great advantages claimed for ferro-cement as a ship construction material is its low cost. In fact, Portland cement, sand and steel are among the most inexpensive materials, the estimated cost of the composite being about 0.7 cents per pound. Nevertheless, other factors that influence the cost of the final product have to be considered. Among these, the most important are capital investment and labour cost.

Ferro-cement construction requires relatively low capital investment using basically the same equipment as regular reinforced concrete. Labour costs, on the other hand, are fairly high because, although unskilled labour can be employed, there is extensive hand work involved.

Most of the cost analysis done for the United States and Canada show that 1/5 to 1/4 of the total cost of a ferro-cement hull corresponds to materials, and labour costs represent about 1/3 to 2/5. The rest of the cost of the hull corresponds to capital investment, facilities, overhead and miscellaneous. From these figures it is clear why some people, particularly amateur boat builders, claimed savings of 50% to 75% of a wooden or metallic boat. They neglect labour costs, overhead and probably equipment.

From a cost stand point we can see why there should be a definite advantage in working with ferro-cement in underdeveloped countries. In these countries labour costs are from

five to ten times lower, cement is generally available and unexpensive, and in some countries steel mesh is locally produced. It is expected that in the future small parts of machinery will be manufactured in an industrial scale, but first, techniques of manufacture and quality control have to be developed.

Special consideration has to be given to more involved methods of fabrication which at first glance might seem expensive, but after further consideration may turn out to be advantageous cost-wise. In this connection one should look into time saving processes such as fast curing, prompt after moulding handling, and processes which will give good and hard surface finish because savings in coating processes and materials may be earned. Most of these processes give a more uniform and better quality, and this means further savings in quality control, a lower rejection ratio, better appeal and an increase in the product's value.

The relatively easy and inexpensive set up for production of parts, should make ferro-cement particularly competitive when few number of parts is needed, and when fast delivery of non standard parts is needed.

V. 2. Mortar Reinforced with Random Steel Fibers

Many investigators who studied the effect of increasing distribution of steel reinforcment have used short steel fibers randomly oriented, usually in a proportion of 1 percent to 5 percent by volume. Most of the experiments have been performed using fibers of cylindrical cross-section but square and rectangular sections have also been employed, and more recently some work was done (32) using tridimensional fibers.

So far the results have shown that the properties of this composite are well below theoretical predictions; today fibers of 200,000 psi tensile strength are commerically available; these mixed in a very small proportion could easily produce concrete of 4,000 psi tensile strength if the law of mixtures held true. On the contrary, the results have shown that fibers do not influence the magnitude of stress at first crack and increase ultimate strength by a factor of 1.2 to 2.5. Shah and Rangan (3) pointed out that fibers do not influence very much the formation of cracks but they hinder crack propagation. This resulted in a material with significantly increased ductility, the work necessary to bring a specimen to failure (toughness) increased in Shah and Rangan's work by as much as 20 times in 3 point flexure tests of 2 x 2 in beams reinforced with 1.25 percent by volume of fibers (0.01" x 0.01" x 3/4", yield strength 110 ksi, ultimate strength 120 ksi).

These characteristics of fiber reinforced concrete makes it suitable for applications in which it will be subjected to

impact or shock loading and to structures subjected to cyclic loading of any type because these are the situations in which most profit is made of the sensible improvement of ductility and toughness. If we think in terms of strength, continuous reinforcement is much more efficient since it can hold together cracked structures. In a way this could be achieved in fiber reinforced concrete if the length of the fibers could be increased, but this creates problems in mixing as fibers tangle together causing segregation. The optimum reinforcement suggested by Naaman, Mc Garry and Sultan (32) is under 5% of fibers by volume and aspect ratio (length to diameter of the fibers) of 60. These investigators studied the effect of tridimensional reinforcement obtaining very good results, making of this a very promising field. The flexural strength was doubled and energy absorbed was increased by a factor of ten over similar samples reinforced with straight fibers, but the most impressive result is the elasto-plastic behavior of the mixture that was observed for one type of fiber and which may be obtained even using brittle steel. The elasto-plastic behavior leads to a ductile type of failure which is very desireable for safety considerations since this kind of failure is preceded by ample deformation which acts as a warning. Furthermore, more energy is required to induce this kind of failure.

V. 3. Future Work in Ferro-cement

According to the literature research undertaken in previous sections, it is clear that careful study of various ferro-cement applications is a promising proposition. So far most of the efforts of the research in this field have been directed towards marine applications, especially boat construction.

A whole field of research is opened for the mechanical engineer, and we can say that so far investigations have only barely started. There is no point in mentioning all the testing that would have to be performed on ferro-cement to get a good feeling of the material's properties, and some indications in this direction were mentioned in the text. We simply want to mention fields where very little or no work at all has been done, and from which useful results are expected.

In the mechanical properties, nothing is known on torsional characteristics of ferro-cement, very little was studied in relation to creep, and extensive examination was suggested for fatigue. Studies of abrasion resistance have to be overtaken and topics associated to this field such as friction, lubrication, surface phenomena have to be investigated.

Chemical attack can be further investigated, but for the time being, by using epoxy coatings and paints this problem is solved for a variety of applications.

Fastening and joining of ferro-cement parts has not yet been tackled, and this is a problem of fundamental importance in the mechanical engineering field, where we deal with the mechanism of various parts which are held together yet can move in relation to one another. Not only fastening of ferro-cement parts have to be studied, but also fastening of ferro-cement to other materials, whether and how traditional fastening methods can be used, development of new methods, etc. No work has been done so far in investigating the thermal properties of this material, its various possible uses for heat conduction, for heat storage, as an insulator, but studies of this nature have been done for regular concrete.

A very large field opened for investigation is that related to the production of ferro-cement parts, in particular manufacturing, handling, cost, etc. Many techniques of manufacture have been investigated that improve the quality of the finished product, speed up the process and which are impractical or uneconomical to use in large scale parts such as ship hulls, but that could be used at an economic advantage to the production of small parts. Most of these techniques have been developed for prefabrication of blocks, piping and fairly small structures; most of them depend on treatment by heat, pressure, humidity, vibratory action, prestressing of reinforcement, diffusion of gases into the matrix, centrifugal pressures and others. It is clear that most of these are design to be used in the unhardened state of the concrete, during

setting, that is, the time during which one can most successfully vary the properties of the mixture by adequately regulating temperature, moisture content and pressure. Some of these commercial processes alter the nature of the bond between reinforcement and concrete, some change the mechanical and chemical properties of the matrix and therefore, in order to evaluate these techniques, they first have to be applied to ferro-cement.

Finally we would like to indicate that further research into the mechanisms of fracture will improve the behavior of this material. The discrepancies that exist among the different investigators on what is the effect of dispersed reinforcement on the mechanical properties of ferro-cement is a clear indication that the mechanism of fracture of the material is not clearly understood. It is expected that a better understanding of this problem, especially in relation to crack formation and propagation, will result in improved fracture characteristics. This will also save a lot of effort to investigation as a whole since most of it has been devoted to experimenting with all kinds of mesh sizes, distribution and strength.

REFERENCES

1. Naaman, A. E., "Reinforcing Mechanisms in Ferro-Cement", MS Thesis, Department of Civil Engineering, Massachusetts Institute of Technology, September 1970.

2. Naaman, A. E. and Shah, S. P., "Tensile Tests of Ferro-Cement", Journal of the American Concrete Institute, Title No. 68-58, September 1971, p. 693.

3. Shah, S. P. and Rangan, B. V., "Fiber Reinforced Concrete Properties", Journal of the American Concrete Institute, Title No. 68-14, February 1971, p. 126.

4. Key, W. H., "Impact Resistance of Ferro-Cement Plates", MS Thesis, Department of Naval Architecture and Marine Engineering, Massachusetts Institute of Technology, May 1970.

5. Shah, S. P. and Key, W. H., "Ferro-Cement as a Material for Offshore Structures", Offshore Technology Conference, Paper No. OTC 1465, April 1971, Volume II, p. 452.

6. Shah, S. P. and Chandra, S., "Fracture of Concrete Subject to Cyclic Sustained Loading", Journal of the American Concrete Institute, Title No. 67-49, October 1970, p. 816.

7. Claman, J. S., "Bonding of Ferro-Cement Plates", MS Thesis, Department of Naval Architecture and Marine Engineering, Massachusetts Institute of Technology, May 1969.

8. Collins, J. F., "An Investigation into Bond Strength Importance in Ferro-Cement", Thesis, Department of Naval Architecture and Marine Engineering, Massachusetts Institute of Technology, June 1969.

9. Collins, J. F. and Claman, J. S., "Ferro-Cement for Marine Applications - An Engineering Evaluation", Department of Naval Architecture and Marine Engineering, Massachusetts Institute of Technology, March 1969.

10. Romualdi, J. P. and Batson, G. B., "Behavior of Reinforced Concrete Beams with Closely Spaced Reinforcement", Journal of the American Concrete Institute, Title No. 60-40, June 1963, p. 775.

11. Romualdi, J. P. and Batson, G. B., "Mechanics of Crack Arrest in Concrete", Proceedings of the American Society of Civil Engineers, Engineering Mechanics Division, June 1963.

12. Romualdi, J. P. and Mandel, J. A., "Tensile Strength of Concrete Affected by Uniformly Distributed and Closely Spaced Short Lengths of Wire Reinforcement", Journal of the American Concrete Institute, Title No. 61-38, June 1964, p. 657.

13. Romualdi, J. P., Ramey, M., and Sanday, S. C., "Prevention and Control of Cracking by Use of Short Random Fibers", Paper No. 10, Special Publication No. 20, American Concrete Institute, 1968.

14. Bezukladov, V. F., Amel Yanovich, N. K., Verbitskiy, C. D., Bogoyavelnskiy, L. P., "Ship Hulls Made of Reinforced Concrete", Naval Ship Systems Command Translation No. 1148, November 1968.

15. Nervi, P. L. "Ferro-Cement: Its Characteristics and Potentialities", L'Ingegnere, January 1951, (in Italian), or Cement and Concrete Association, Translation No. 60, 1959 (English Translation).

16. Luhlert, R. F., "Analysis of Ferro-Cement in Bending", Department of Naval Architecture and Marine Engineering, The University of Michigan, December 1969.

17. Canby, C. D., "Ferro-Cement with Particular Reference to Marine Applications", Department of Naval Architecture and Marine Engineering, University of Michigan, March 1969.

18. Samson, John, Wellens, Geoffrey, "How to Build a Ferro-Cement Boat", Vancouver, B. C. Samson Marine Division Enterprises, 1968.

19. Monfore, G. E., "A Review of Fiber Reinforcement of Portland Cement Paste, Mortar and Concrete", Journal of the Portland Cement Association Research and Development Laboratories, September 1968.

20. Orchard, D. F., Concrete Technology, John Wiley & Sons, N.Y., 1962, Vol. 1, p. 8.

21. Geymayer, H. G. and Cox, F. B., "Bamboo Reinforced Concrete", Journal of the American Concrete Institute, Title No. 67-51, October 1970, p. 841.

22. Thomas, J. A. G., "Fiber Composites as Construction Materials' Composites, Volume 3, No. 2, March 1972, p. 62.

23. Thomas, J. A. G., "Glass-Fiber-Reinforced Cement", Composites Volume 2, No. 2, June 1971.

24. Allen, H. G., "Tensile Properties of Seven Asbestos Cements", Composites, Volume 2, No. 2, June 1971, p. 82.

25. Griffith, A. A., "The Phenomena of Rupture and Flow in Solids", Transactions, Royal Philosophical Society, A221 1920, p. 163.

26. Orowan, E., "Fundamentals of Brittle Behavior in Metals", Massachusetts Institute of Technology Symposium, Cambridge, Massachusetts, June 1950, p. 139.

27. Irwin, G. A., and Kies, J. A., "Critical Energy Rate Analysis of Fracture Strength", Welding Journal, Volume 33, 1954, p. 193.

28. Taylor, W. H., Concrete Technology and Practice, Angus and Robertson Ltd., Sydney, Australia, 1965.

29. Lankard, D. R., "Steel Fibers in Mortar and Concrete", Composites, Volume , No. , March 1972, p. 65.

30. Williamson, G. R., "Fibrous Reinforcements for Portland Cement Concrete", Ohio River Division Laboratories, Corps of Engineers, Technical Report No. 2-40, May 1965.

31. Roy, D. M., Gouda, G. R., and Bobrowsky A., "Very High Strength Cement Pastes Prepared by Hot Pressing and Other High Pressure Techniques", Cement and Concrete Research, Volume 2, No. 3, May 1972, p. 349.

32. Naaman, A. E., McGarry, F. J., and Sultan, J. N., "Developments in Fiber-Reinforcement for Concrete", Department of Civil Engineering, Massachusetts Institute of Technology, Research Report R72-28, May 1972.

APPENDIX A

Determination of Specific Surface of Reinforcement and of Fraction Volume of Reinforcement

Given a section of a beam of dimensions shown in Figure A1, we can calculate the area and the volume of reinforcment as follows:

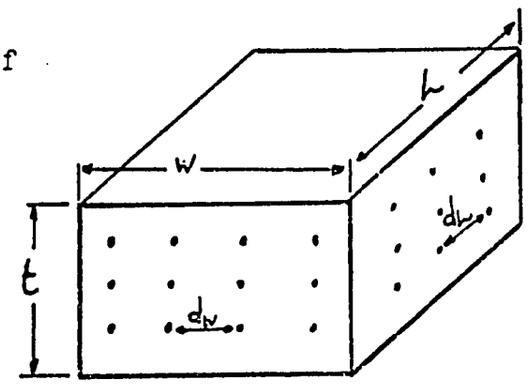

Fig. A1 - Section of a Beam

$$A_r = n\left(A_{WL} N_L + A_{WW} N_W\right)$$

$$A_{WL} = \pi \phi L$$

$$A_{WW} = \pi \phi W$$

$$N_L = \frac{W}{d_W}$$

$$N_W = \frac{L}{d_L}$$

$$A_r = n\pi\phi\left(\frac{L.W}{d_W} + \frac{W.L}{d_L}\right) \quad ---- (A.1)$$

and $S_R = \dfrac{A_r}{L.W.t}$

which results in

$$S_R = \frac{n\pi\phi}{t}\left(\frac{1}{d_W} + \frac{1}{d_L}\right) \quad ---- (A.2)$$

and $S_L = \dfrac{n.\pi.\phi}{t.d_L}$

n - number of wires meshes in sample

N_L - number of wires per mesh in longitudinal direction

N_W - number of wires per mesh in transverse direction

A_{WL} - surface area of each wire in transverse direction

ϕ - diameter of wire

S_R - specific surface of reinforcement

S_L - specific surface of reinforcement in longitudinal direction

$$V_r = n\left(V_{wL} \cdot N_L + V_{ww} \cdot N_w\right)$$

$$V_{wL} = \frac{\pi \phi^2 L}{4}, \quad V_{ww} = \frac{\pi \phi^2 w}{4}$$

$$\Longrightarrow \quad V_R = \frac{V_r}{L \cdot w \cdot t}$$

$$V_R = \frac{n \cdot \pi \cdot \phi^2}{4 \cdot t}\left(\frac{1}{d_w} + \frac{1}{d_L}\right) \text{ ----(A.4)}$$

V_{wL} - volume of each wire in longitudinal direction

V_{ww} - volume of each wire in transverse direction

V_R - fraction volume of reinforcement

V_L - fraction volume of reinforcement in the longitudinal direction

From the expressions for the specific surface of reinforcement (S_R), and for the fraction volume of reinforcement an important relation between them is immediately deduced:

$$V_R = \frac{S_R \cdot \phi}{4} \text{ ------ (A.5)}$$

At constant volume of reinforcement the specific surface can be increased by decreasing the diameter of the wires.

APPENDIX B

METHODS OF ANALYSIS OF FERRO-CEMENT

Working Stress Analysis

This method consists in transforming one of the materials into equivalent areas of the other, thus obtaining a transformed homogeneous beam simile that can be analyzed using the general theory on isotropic materials. In applying this method to ferro-cement, it is more convenient to transform steel reinforcement into equivalent areas of concrete.

First we substitute the steel reinforcement by an amount of concrete that carries the same load, so that

$$F_c = F_s$$

The variables subscripted by c correspond to concrete and those subscripted by s correspond to steel.

or, $$A_c E_c \epsilon_c = A_s E_s \epsilon_s$$

A - cross-sectional area

F - force supported by each phase

E - modulus of elasticity

ϵ - strain

As the deformation of the transformed beam should be the same as the deformation of the original reinforced beam, the strains should be equal in both cases,

therefore, $\epsilon_c = \epsilon_s$

and $$Ac = \frac{E_s}{E_c} A_s$$

Part of this equivalent area of concrete has to fill in the space occupied by the steel, therefore we define a new parameter that is the equivalent area of concrete added,

$$A_{ca} = \frac{E_s}{E_c} A_s - A_s = \left(\frac{E_s}{E_c} - 1\right) A_s$$

A_{ca} - equivalent area of concrete added

This result was obtained by establishing that the forces supported by the steel and by the equivalent area of concrete were the same. In order for the moments about the neutral axis also to be equal, the bending arms should be kept constant by placing the equivalent concrete section at the same distance from the neutral axis as the reinforcement (Figure B1).

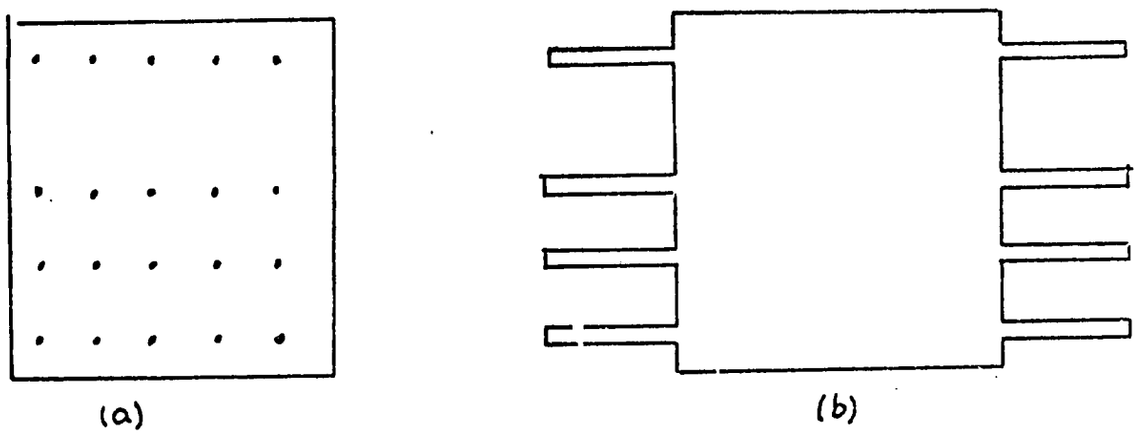

Figure B.1 (a) Original Beam
(b) Equivalent Beam

This method contemplates the possibility of having various types of meshes with different cross-sections, and various elasticity moduli by calculating independently the equivalent area corresponding to each mesh and locating it at the appropriate distance from the neutral axis.

Location of the Neutral Axis

We are going to distinguish two situations in this analysis: one for the uncracked beam, and the second for the beam after first crack occurrence. Some people consider these two together, or deduce one from the other, but we chose the alternate way for purposes of clarity.

In principle the neutral axis will be located using the equilibrium principle which states that the summation of the forces acting on the beam in the direction of the axis parallel to the beam is zero (directions are shown in Fig. B.2):

$$\sum F_x = \int_A \sigma_x \, dA = 0$$

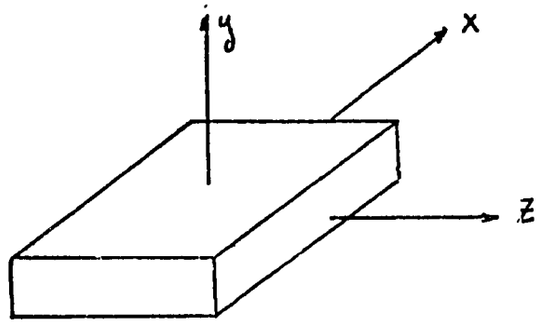

Figure B.2 - Direction of Principal Axis Relative to Beam

σ_x , which is the distribution of normal stress in the direction of x, can be expressed as [1] :

$$\sigma_x = -E \frac{y}{\rho}$$

$$\therefore \sum F_x = \frac{-E}{\rho} \int_A y \, dA = 0$$

E- modulus of elasticity

y- coordinate perpendicular to x, and with zero on the neutral axis of the beam

[1] See, Crandall S.H., Dahl N.C., and Lardner T.J., An Introduction to Mechanics of Solids, Chapter 7, McGraw Hill Book Co., N.Y., 1972.

$$\Rightarrow \quad \Sigma M = \int_A y\,dA = 0$$

ρ - radius of curvature of the beam in flexure

This indicates that the first moment of the area about the neutral axis is zero; it also indicates that the neutral axis passes through the center of gravity of the cross-sectional area.

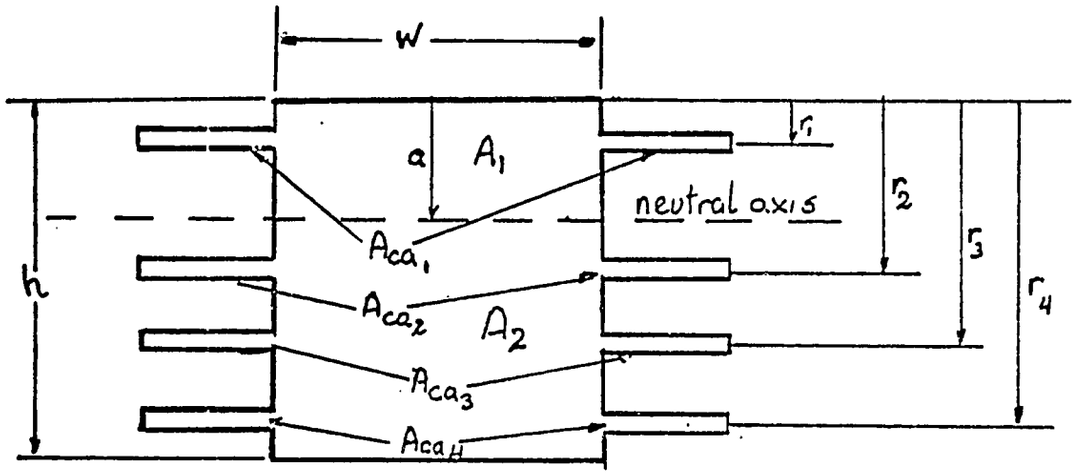

Figure B.3 - Transformed Beam Showing Areas of Concrete Added and their Location

Uncracked Beam

This situation is very simple once the configuration of the equivalent beam has been determined because the theory on linear isotropic elastic materials directly applies to it. In the case of the beam shown in Fig. B.3, we proceed in the following manner:

$$\Sigma M = 0$$

or,
$$A_1 \frac{a}{2} + A_{ca_1}(a - r_1) - A_2 \left(\frac{h-a}{2}\right) - A_{ca_2}(r_2 - a) - A_{ca_3}(r_3 - a) - A_{ca_4}(r_4 - a) = 0$$

where, $A_1 = a.W \qquad A_2 = (h-a).W$

Expanding terms we get:

$$\frac{W.a^2}{2} - \frac{W.h^2}{2} - \frac{Wa^2}{2} + a.h.W + a.(A_{ca_1} + A_{ca_2} + A_{ca_3} + A_{ca_4}) - (A_{ca_1}.r_1 + A_{ca_2}.r_2 + A_{ca_3}.r_3 + A_{ca_4}.r_4) = 0$$

$$a = \frac{A_{ca_1}.r_1 + A_{ca_2}.r_2 + A_{ca_3}.r_3 + A_{ca_4}.r_4 + \frac{wh^2}{2}}{hw + A_{ca_1} + A_{ca_2} + A_{ca_3} + A_{ca_4}}$$

Cracked Beam

In this case we make the assumption that the concrete in the tension side of the neutral axis carries no load; thus, all the tensional force is carried by the reinforcement. In the concrete simile this is equivalent to saying that only the

section of concrete that is equivalent to the section of steel has a moment effect, therefore the steel reinforcement is substituted by A_c, the equivalent area of concrete. On the compression side, we assume that the load is still shared by the concrete and the reinforcement, therefore the latter is substituted by A_{ca}, equivalent area of concrete added. In this case, the first assumed location of the neutral axis is important because meshes that lie in the compression side are substituted by A_c. If the initial assumption is incorrect and a mesh lie in the wrong side, the location of the neutral axis has to be adjusted accordingly.

Proceeding in a similar way as in the case of the uncracked beam, we set to zero the summation of the first moments of the areas about the neutral axis,

$$\Sigma M = A_1 \frac{a}{2} + A_{ca_1}(a - r_1) - A_{c_2}(r_2 - a) - A_{c_3}(r_3 - a) - A_{c_4}(r_4 - a) = 0$$

and $\quad A_1 = w.a$

$$\therefore \Sigma M = \frac{w.a^2}{2} + a\left(A_{ca_1} + A_{c_2} + A_{c_3} + A_{c_4}\right) - \left(A_{ca_1}.r_1 + A_{c_2}.r_2 + A_{c_3}.r_3 + A_{c_4}.r_4\right) =$$

$$A_{ca_1} = \left(\frac{E_s}{E_c} - 1\right) A_{s_1}, \quad A_{c_2} = \frac{E_s}{E_c} A_{s_2}, \quad A_{c_3} = \frac{E_s}{E_c} A_{s_3}, \quad A_{c_4} = \frac{E_s}{E_c} A_{s_4}$$

All the values of the moment equation are known, except a for which we can solve as a quadratic equation:

$$a = \frac{1}{W} \cdot \left[-(A_{ca_1} + A_{c_2} + A_{c_3} + A_{c_4}) \pm \sqrt{(A_{ca_1} + A_{c_2} + A_{c_3} + A_{c_4})^2 + 2 \cdot W \cdot (A_{ca_1} \cdot r_1 + A_{c_2} \cdot r_2 + A_{c_3} \cdot r_3 + A_{c_4} \cdot r_4)} \right]$$

Determination of the State of Stress and Strain

Once an equivalent beam is obtained, which is homogeneous and isotropic, and of which the location of the neutral axis is known, the problem of relating moments to stresses and strains is achieved simply by using the classical theory on slender members. It is therefore assumed that stress varies linearly with the distance from the neutral surface and is related to the bending moment as follows:

$$\sigma = \frac{-M_b \cdot y}{I_{yy}}$$

$$\epsilon = \frac{-M_b \cdot y}{E_c \cdot I_{yy}}$$

y - the distance from the neutral axis to the point where stress is being measured.

M_b - the bending moment.

Iyy - the second moment, or moment of inertia, of the cross-sectional area about the neutral axis. A method for calculating its value is explained next.

The stress on the reinforcement can readily be obtained once the stress on the concrete has been determined.

$$\sigma_s = \sigma_c \frac{E_s}{E_c}$$

Moment of Inertia of the Equivalent Beam

Treatment of this topic can be extensively found in the literature, therefore we will briefly mention a way to calculate it for the equivalent beam in terms of the parameters mentioned in this connection. The moment of inertia is usually expressed as the following integral (calculated about the neutral axis and using the coordinates shown in Fig. B.2):

$$I_{yy} = \iint_A y^2 \, dy \, dz$$

We assume that the concrete that substitutes the equivalent area of steel is concentrated at one point, a distance from the neutral axis. In a similar way, as was considered for the first moment, equivalent area of concrete (A_c) is used in substitution of wire meshes that are in the tension side of a cracked beam, and equivalent area of concrete added (A_{ca}) is used in all other cases; in the cracked beam the concrete on the tension side carries no load.

For the beam in Fig. B.3, the moment of inertia will be calculated as follows:

(i) Before cracking

$$I_{yy} = w. \int_{-(h-a)}^{a} y^2 . dy + A_{ca_1} \ell_1^2 + A_{ca_2} . \ell_2^2 + A_{ca_3} . \ell_3^2 + A_{ca_4} . \ell_4^2$$

(ii) Cracked

$$I_{yy} = w.\int_0^a y^2.dy + A_{ca_1}.\ell_1^2 + A_{c_2}.\ell_2^2 + A_{c_3}.\ell_3^2 + A_{c_4}.\ell_4^2$$

where $\ell_1 = (a - r_1)$ $\ell_2 = (a - r_2)$ $\ell_3 = (a - r_3)$ $\ell_4 = (a - r_4)$

Example:

Calculation of Moments of Inertia for the Beam (Series A) Used by Claman (7) in Flexure.

Overall Dimensions

length	12 inches
width	1 inch
depth	1/2 inch

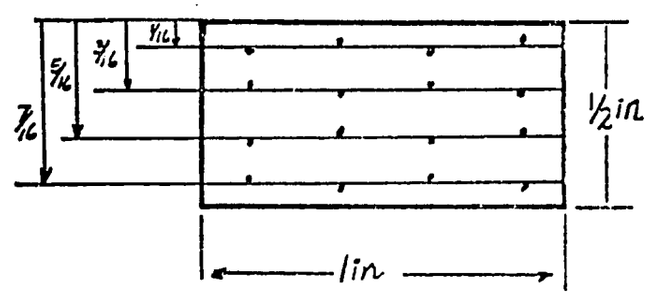

Fig. B.4 - Cross-section of Beam Used for the Example

Reinforcement

4 layers of mesh square woven 4 wires per inch

diameter of wire = .042 in

ultimate strength of mesh = 42.300 psi

assume distribution of reinforcement

Modulus of Elasticity

of steel - $E_s = 30 \times 10^6$ psi

of concrete - $E_c = 3.2 \times 10^6$ psi

Equivalent Area of Concrete

$$A_c = \frac{E_s}{E_c} A_s \quad , \quad A_s = \frac{\pi \phi^2}{4} . N . w$$

ϕ - diameter of wire

N - wires per inch mesh

A_s - area of steel per inch of width of sample

$$A_c = \frac{30 \times 10^6}{3.2 \times 10^6} \times \pi \times \frac{(0.042)^2}{4} \times 4 \times 1 = .05195 \, in^2$$

Area of Concrete Added

$$A_{ca} = \left(\frac{E_s}{E_c} - 1 \right) A_s$$

$$A_{ca} = \left(\frac{30 \times 10^6}{3.2 \times 10^6} - 1 \right) . \pi . \frac{(0.042)^2}{4} \times 4 \times 1 = 0.04641 \; in^2$$

- Uncracked Beam -

$$a = \frac{A_{ca_1} . r_1 + A_{ca_2} . r_2 + A_{ca_3} . r_3 + A_{ca_4} . r_4 + \frac{w . h^2}{2}}{h . w + A_{ca_1} + A_{ca_2} + A_{ca_3} + A_{ca_4}}$$

In the case we are considering $A_{ca_1} = A_{ca_2} = A_{ca_3} = A_{ca_4} = A_{ca}$

we notice that $r_1 + r_2 + r_3 + r_4 = 2h$

$$a = \frac{A_{ca} (r_1 + r_2 + r_3 + r_4) + w . h . \frac{h}{2}}{h . w + 4 A_{ca}} = \frac{A_{ca} . 2h + w . h . \frac{h}{2}}{h . w + 4 A_{ca}}$$

$$= \frac{(4 A_{ca} + w . h) \, h/2}{(h . w + 4 A_{ca})} = \frac{h}{2} \quad \Longrightarrow \quad a = \frac{h}{2}$$

$$I_{yy} = w. \int_{-h/2}^{h/2} y^2 dy + A_{ca}(\ell_1^2 + \ell_2^2 + \ell_3^2 + \ell_4^2)$$

$$= \frac{w.h^3}{12} + A_{ca}(\ell_1^2 + \ell_2^2 + \ell_3^2 + \ell_4^2)$$

$$= \frac{1}{96} + (0.04641)\left(\frac{1}{16^2} + \frac{1}{16^2} + \left(\frac{3}{16}\right)^2 + \left(\frac{3}{16}\right)^2\right) = \frac{1}{96} + (.04641)\frac{20}{256} = .01404 \text{ in}^4$$

$$\frac{I_{yy}^*}{I_{yy}} = \frac{.01041}{.01404} = .74$$

I_{yy}^* - represents value given by Claman

- Cracked Beam -

We assume that the neutral axis will fall between meshes 1 and 2.

$$a = \frac{1}{W} \cdot \left[-(A_{ca_1} + A_{c_2} + A_{c_3} + A_{c_4}) \pm \sqrt{(A_{ca_1} + A_{c_2} + A_{c_3} + A_{c_4})^2 + 2w.(A_{ca_1} r_1 + A_{c_2} \cdot r_2 + A_{c_3} \cdot r_3 + A_{c_4} \cdot r_4)} \right.$$

$A_{ca_1} = A_{ca} = .04641 \text{ in}^2$

$A_{c_2} = A_{c_3} = A_{c_4} = A_c = .05195 \text{ in}^2$

$(A_{ca_1} + A_{c_2} + A_{c_3} + A_{c_4}) = .2022 \text{ in}$ $\quad (A_{ca_1} + A_{c_2} + A_{c_3} + A_{c_4})^2 = .04091 \text{ in}^2$

$2(A_{ca_1} \cdot r_1 + A_{c_2} \cdot r_2 + A_{c_3} \cdot r_3 + A_{c_4} \cdot r_4) = .1032 \text{ in}^2$

$\sqrt{.04091 + .1032} = .3796 \text{ in}$

$\underline{\underline{a = .177 \text{ in}}}$

$$I_{yy} = w. \int_0^a y^2 dy + A_{ca_1} \cdot \ell_1^2 + A_{c_2} \cdot \ell_2^2 + A_{c_3} \cdot \ell_3^2 + A_{c_4} \cdot \ell_4^2$$

$$= \frac{w.a^3}{3} + A_{ca_1} \cdot \ell_1^2 + A_{c_2} \cdot (\ell_2^2 + \ell_3^2 + \ell_4^2)$$

$$= .00186 + .00061 + .00447 = \underline{\underline{.00694 \text{ in}^4}}$$

- Stress Calculations -

Using the equation for slender members given previously, we calculate the stresses given the bending moments.

First Crack Appearance

Bending moment = 99.73 in. lb.

$$\sigma = \frac{-M_b \cdot y}{I_{yy}}$$

(1) Assuming uncracked beam, the neutral axis is in the middle and the moment of inertia is .01404 in^4. The maximum compression strength is equal in magnitude to the maximum tension strength occurring in the outmost surfaces.

$$\sigma = \pm \frac{99.73 \times .25}{.01404} = 1776 \text{ psi} \quad \text{with } y = \mp .25 \text{ in}$$

The maximum tensional stress on the reinforcement is:

$$\sigma_s = \sigma_c \frac{E_s}{E_c}$$

$$\sigma_s = \frac{99.73 \times \frac{3}{16}}{.01404} \times \frac{30 \times 10^6}{3.2 \times 10^6} = 12{,}486 \text{ psi} \quad \text{with } y = -\frac{3}{16} \text{ in. from neutral axis}$$

(2) Right after cracking the neutral axis has been displaced to .177 in. from the surface at the compressive face and the moment of inertia is .00694 in.^{4}

Maximum compressive stress on the beam:

$$\sigma = \frac{-M_b \cdot y}{I_{yy}} = \frac{99.73 \times .177}{.00694} = -2548 \text{ psi}$$

Maximum tensional stress on reinforcement:

$$\sigma_s = \frac{99.73 \times (.4375 - .177)}{.00694} \times \frac{30 \times 10^6}{3.2 \times 10^6} = 35{,}128 \text{ psi}$$

The reinforcement is in the plastic range and close to the ultimate strength that occurs at 42,300 psi.

(3) Bending moment at ultimate

$$\sigma_s = 42,300 \text{ psi}$$

$$y = .2605 \text{ in}$$

$$M_b = \frac{\sigma_s \cdot I_{yy} \cdot E_c}{y \cdot E_s} = \frac{42,300 \times .00694 \times 3.2 \times 10^6}{.2605 \times 30 \times 10^6} = 120 \text{ lb-in}$$

APPENDIX C

TABULATION OF SELECTED REPORTED DATA

Table I : Reinforcement Parameters

Sample Number	From Ref.	Series in Ref.	Type of mesh	Mesh Size wires/in	Wire Diam. in	U.T.S. of wire psi	V_R per cent	S_R in^2/in^3
1	7	A	square woven	4	.042	42,000	9.0	8.5
2	1	A4	square woven	4	.025	51,000	6.3	10.1
3	1	L4	square woven	4	.025	160,000	4.68	7.50
4	1	N1	square welded	2	.063	74,000	5.00	3.20
5	4	6-0-H	square woven	4	.025	161,000	5.4	8.40
6	4	0-3-L	square welded	1	.075	57,7000	5.4	2.8
7	14	IV	square woven	2	.047		5.6	4.6
8	14	V	square woven	3	.027		5.4	7.9
9	14	1C	square woven	3	.027		5.4	7.9

Table II : Tensional Properties

Sample Number	First crack Stress psi	Ultimate Stress psi	Modulus of Elasticity psi x 10^6 Before 1st crack	After 1st crack
1	830	1460	2.91	.52
2	960	1630	.55	
3	830	3800	1.0	.64
4	504	1850	1.0	.54
5	901	3668	2.56	.56
6	596	1948	1.1	.58
7	840	1130	1.4	
8	1040	1280	1.1	

Table III: Properties in Flexure

Sample Number	First Crack Stress psi	Ultimate Stress psi	Modulus of Elasticity psi
1	2690	4840	1.30×10^6
7	2300		1.52×10^6
8	2700		1.25×10^6

Table IV: Shear Properties

Sample Number	Yield Strenght psi	Shear Modulus psi
1	1093	1.2×10^6
9	710	$.75 \times 10^6$